07.3 Mechanical/Electronic gasoline injection (KE injection)

Designation	Nature and reason for modification	Production breakpoint	Op. no.
Fuel pump relay	Modified governed speed: 6450 ± 50 rpm, previously 6650 ± 50 rpm. Modified cold start valve actuation: + 60 °C, previously + 15 °C.	as of 06/88	07.3–5792
Fuel pump relays (N16/3, N16/4)	Modified relay function 1st version Additional sensor for oxygen sensor heater with designation 87H. Modified cable assignment in relay. Actuation as before. The additional connector 87H is connected to a bridge to connector 87. 2nd version Elimination of bridge between terminals 87 and 87H. Modified electronic circuitry in relay. Additional connector for oxygen sensor heater. Oxygen sensor only heated from + 20 °C coolant temperature. Cut-in temperature controlled by coolant temperature sensor.	 up to approx. 12/89 as of 01/90	07.3–5792
Cold start valve	Plastic connector coloured in green (previously blue).	08/88	07.3–2353
Cold start valve	Start valve has 1.2 amperes (previously 3 amperes) and improved seal at the armature	05/90	07.3–2353
Injection valves	Higher opening pressure (3.7 – 4.3 bar).	08/88	07.3–6500

Designation	Nature and reason for modification	Production breakpoint	Op. no.
Mixture control unit	Anti-tamper lock for mixture regulating screw with steel ball (previously steel cylinder).	as of 12/88	07.3–5203
Fuel filter	**Models 124, 129, 201 (without (USA) and Gulf states):** conversion of fuel filter to 0.4 liter (was 0.6 liter).	Mod. 124: 02/93 Mod. 129: 06/93 Mod. 201: 01/93	–
Fuel pump	Optionally Bosch fuel pump or Pierburg double fuel pump,	Mod. 124: 02/93 Mod. 129: 06/93 Mod. 201: 01/93	–

07.3 Mechanical/Electronic gasoline injection system (KE injection)

Designation	Nature and reason for modification	Production breakpoint	Op. no.
Fuel pump	Fuel pumps with shaped track. Identification: Bosch production date as of 642.	as of 02/86	07.3–5710
Fuel pump Model 201.029	Fuel pumps of a further manufacturer (except national versions (AUS) (J) (USA)).	11/90	–
Mixture control unit	Securing screw for air guide housing to mixture control unit M 6×22 screw + washer (previously M 6×20). Improved installation security.	as of 03/86	07.3–1686
KE control unit	Fault diagnosis by measuring on/off ratio integrated in KE control unit.	as of 03/86	07.3–1698
KE control unit	Engine 103.940/943/983/985: At low speeds the idle speed control is set to open-loop mode (constant air throughput) by processing a road speed signal in KE control unit.	07/87	07.3–1698
KE control unit	Engine 103.940/942/983: Reduction in tendency to jerk by use of road speed signal in KE control unit.	as of 02/88	07.3–1698

09 Air cleaner

Designation	Nature and reason for modification	Production breakpoint	Op. no.
Intake air temperature sensor (B17/2)	Retrofitting for vehicles up to vehicle ident end no. 1F 004948 Model 124.090	as of 02/86	09–1051

14 Intake manifold, exhaust manifold, emissions control system

Designation	Nature and reason for modification	Production breakpoint	Op. no.
Exhaust manifold (CH)	Exhaust manifold with emissions test connection.	09/88	14–3915
Exhaust manifold	Shield attached to exhaust manifold cylinders 1–3 to reduce heat radiated to air pump. Exhaust manifold with additional cooling and stiffening ribs (version (CH) with emissions test connection).	08/89	14–3915
Exhaust manifold	Exhaust manifold with additional cooling and stiffening ribs.	10/89	14–3915
Exhaust manifold	Vehicles with automatic transmission: New production start of exhaust manifold with (national version (CH)) and without connection for emissions test, emissions control system and air injection (national version (DK) (N) (S) (SF)).	06/90	14–3915
Exhaust manifold	Collar nut (previously nut with washer) for attaching to cylinder head.	11/90	14–3915
Temperature sensor coupling and wiring harness for catalytic converter warning system model 126 (J)	Shape of coupling modified.	01/89	14–0115
Intake manifold gasket	Asbestos-free gasket.	06/90	14–1310
Intake manifold	Intake manifold attachment modified	05/90	14–1310

15 Electrical system engine (ignition system)

Designation	Nature and reason for modification		Production breakpoint	Op. no.
Crankshaft position sensor	Additional manufacturer (alternatively AB-Elektronik and Bosch).		01/86	15–2133
Crankshaft position sensor (Bosch)	Production-related conversion because of cold soldered points and wire fracture as a result of corrosion.		03/87	–
EZL ignition control unit	Increase in governed speed to 7000 ± 50 rpm in combination with modified camshaft, fuel pump relay and KE control unit.		02/86	15–2093
EZL ignition control unit	Model 129.060 as of vehicle end no. F057393: modified software, because of starting off in 1st gear (automatic transmission)		03/92	15–2093
EZL ignition control unit	Modified ignition map because of load change jolts when shifting with manual transmission.		03/87	15–2093
	Engine	Part no.		
	103.94	006 545 73 32 006 545 75 32 alternatively		
	103.98	006 545 74 32 006 545 76 32 alternatively		
Distributor rotor arm	Production-related conversion because of arcing, cracking and poorly machined central electrode.		03/86	–
Distributor cap	Production-related conversion because of loose or fractured carbon brushes.		03/86	–
May + Christe ignition coils	Production-related conversion because of interturn short circuit and cracks on dome, contact 4.		10/86	–

<table>
<tr><th>Designation</th><th>Nature and reason for modification</th><th>Production break-point</th><th>Op. no.</th></tr>
<tr><td rowspan="5">Spark plugs</td><td colspan="4">Approval of spark plugs</td><td rowspan="5">01/87</td><td rowspan="5">15–1031</td></tr>
<tr><td>ε</td><td>Beru</td><td>Bosch</td><td>Champion</td></tr>
<tr><td>Normal-compression</td><td>14 K–8 DU
14 K–8 DUO</td><td>H 8 DC
H 8 DCO</td><td>S 10 YC
S 10 YCC</td></tr>
<tr><td>(AUS) (J)
(USA)
and
low
compression</td><td>14 K–9 DU
14 K–9 DUO</td><td>H 9 DC
H 9 DCO</td><td>S 12 YC
S 12 YCC</td></tr>
<tr><td colspan="4">Reason: frequent cold start complaints for stop-and-go driving.</td></tr>
<tr><td>Coolant temperature sensor (B11/2)</td><td colspan="4">Conversion to 4-pin temperature sensor.</td><td>08/89</td><td>–</td></tr>
<tr><td>Engine systems control unit MAS</td><td colspan="4">Software revised, storage of fault code 3 eliminated.</td><td>07/90</td><td>15–2193</td></tr>
</table>

Designation	Nature and reason for modification	Production breakpoint	Op. no.
Emissions control system	Engine 103.940/943/983/985 with automatic transmission: new start of production of exhaust recirculation, air injection and engine wiring harness.	06/90	14–7251
Exhaust manifold gasket	Asbestos-free gasket.	as of 07/90	14–3915
Air injection line	Air injection line with modified connection for attaching non-return valve.	10/90	14–7251
Belt pulley at air pump	Installation of spacer ring in front of the bearing in the belt pulley	08/91	14–7251
Exhaust gas recirculation valve	Diaphragm modified in order to improve sealing	09/91	14–7611

Designation	Nature and reason for modification	Production breakpoint	Op. no.
KE control unit	Engine 103.940/942/981/983 (USA California version): Software modification in program part of Carb-Diagnosis (memory)	as of 06/88	07.3–1698
KE 5 control unit	Software modification, thus no further fault display when driving at high altitudes.	11/89	07.3–1698
KE 5 control unit	(USA) software modification, fault code 3 discontinued	07/90	07.3–1698
KE control unit	Harmonization for secondary air pump and exhaust gas recirculation modified.	08/90	07.3–1698
Fuel pump set Model 124 Station Wagon	Retrofitting a holder for fuel pressure hose, thus positioning pressure hose at correct distance to inner ring joint of right rear axle shaft.	as of 07/86	07.3–5710
Fuel pump set Models 124.026/030, 201.029	Installation of second fuel pump to prevent formation of vapour bubbles.	as of 09/86	07.3–5710
Fuel pump set Model 124.026/030	Retrofitting of second fuel pump to prevent formation of vapour bubbles.	as of 07/87	07.3–0266
Fuel pump set Model 124 Sedan	Improvement in noise damping by modified routing and longer pressure hose from fuel filter to fuel feed line.	10/88	07.3–5770
Injection valves	Brass injection valves.	as of 06/87	07.3–6520
Injection valves	Brass injection valves. Identification on shaft 000 078 56 23.	09/88	07.3–6520

Designation	Nature and reason for modification	Production breakpoint	Op. no.
Fuel distributor	Screw union for fuel feed and return pipe made of modified material	01/90	07.3–1674
Non-return valve of fuel pump	Tightening torque increased to 22 Nm (previously 17 Nm)	03/90	–
Throttle valve body	Improved throttle valve switch. With automatic transmission and ASR in addition modified opening angle.	as of 03/90	07.3–6210
Fuel filter	**Model 124, 129, 201 (without (USA) Gulf States):** conversion of fuel filter to 0.4 liter (was 0.6 liter). Approval of double fuel pump (Pierburg)	Model 124: 02/93 Model 129: 06/93 Model 201: 01/93	–
Fuel suction hose	**Model 124 Sedan and Coupé:** fuel suction hose from fuel tank to fuel pump converted to shaped hose to avoid kinking (as of vehicle ident end no. B 097367)	10/89	07.3–5710

30 Accelerator control

Designation	Nature and reason for modification	Production breakpoint	Op. no.
Fulcrum lever	Standardized shape	01/86	30–1010
Accelerator pedal lever, models 124, 201	Response and variability of accelerator pedal lever improved by conversion (extension), bearing point and full throttle stop with enlargement of pedal travel by 3° toward full throttle.	11/88	30–0012
Tempomat cruise control connecting rod	Shorten by 6 mm to facilitate installation.	06/89	30–1010
Accelerator control (ASR)	New type of position indicator, actuator and control unit for electronic accelerator pedal.	as of 06/89	30–1156
Accelerator control (ASR)	Engine 103 with automatic transmission (except engine 103.943/985): return spring between bearing bracket and relay lever with greater spring force.	08/89	30–1010
Accelerator control (ASR)	Connecting rod between accelerator control lever and relay lever has standardized shape for M103 and M104.	as of 07/90	30–1010
Tempomat cruise control	Modified rubber seal between coding connector and Tempomat control unit (colour grey, previously black).	as of 11/89	30–1010
Relay lever	Ball stud on relay lever lengthened.	01/91	30–1010
Bowden cable	**Models 124 and 201:** bowden cable with double spiral (model 124 shortened cable length).	01/93	30–3402

47 Fuel system

Designation	Nature and reason for modification	Production breakpoint	Op. no.
Vent line model 124 Station Wagon	Vent line outlet at bottom part of fuel tank (previously top part)	06/86	47–4100
Splash bowl model 124 Sedan	Improved sealing by use of O-ring. Avoids misfiring.	as of 02/87	47–4100
Fuel evaporation control system model 124	Regeneration line routed through component compartment to engine compartment.	03/87	47–8201
Fuel evaporation control system	Regeneration thermovalve actuation: 70°C (previously 50°C).	as of 12/87	47–8252
Fuel evaporation control system model 107	Vent line from fuel expansion tank to vent valve shortened by 150 mm.	03/88	47–8021
Fuel gauge sender, model 201	Installation position modified from 15° to 5° (difference from vertical).	09/87	47–7000
Fuel reserve gauge	To prevent the reserve warning lamp flickering in the transition range to reserve indication, the light is actuated for about 2 minutes by an electronic circuitry when it first lights up. If the contacts again open within about 2 minutes, the reserve warning lamp goes out until the fuel level once again drops below reserve quantity.	09/87	47–7000

Designation	Nature and reason for modification	Production breakpoint	Op. no.
Fuel tank model 126.02 RHD	Improvement in corrosion protection through use of stainless steel for filler neck, lines and threaded flanges.	as of 12/87	47–4100
Fuel tank model 124 Station Wagon	Shorter U section and support for bracket of U section modified.	01/87 (as of veh. ident end no. F 030592).	–
Fuel tank model 124 Station Wagon	Outlet of vent pipe at bottom part of fuel tank (previously top part).	01/86 (as of veh. ident end no. F 014890)	–
Fuel tank model 126.02 RHD	Improvement in corrosion protection through use of stainless steel for filler neck, lines and threaded flanges.	as of 12/87	47–4100
Fuel tank (55 liters) model 201	Plastic fuel tank (except national version (AUS) (J) (USA)).	as of 03/89	47–4100
Activated charcoal filter model 124.026/030	Aluminium vent line (plastic-coated) (previously steel).	as of 02/88	47–8212
Fuel vent line model 124.026/030	Fuel vent line (aluminium version) plastic-coated (except (AUS) (J) (USA)).	as of 03/89	47–4100
Guide funnel (national version (USA))	Guide funnel with additional notches to facilitate installation.	06/89	47–4100
Fuel suction hose	**Model 124 Sedan and Coupé:** fuel suction hose from fuel tank to fuel pump converted to shaped hose in order to avoid kinking (as of vehicle ident end no. B 097367).	10/89	–

Engine	Model	Sales designation	Output in kW at rpm	Compression ε:1
103.940 KE	124.007	260 E special body	118/5800 KAT[1])	9.2
103.940 KE	124.007	260 E special body	115/5800 NV/RÜV	8.0
103.940 KE	124.007	260 E special body	122/5800 RÜV[2])	9.2
103.940 KE	124.026	260 E	121/5800 KAT (J), (AUS)	9.2
103.940 KE	124.026	260 E	118/5800 KAT[1]) except (S)	9.2
103.940 KE	124.026	260 E	115/5800 NV/RÜV	8.0
103.940 KE	124.026	260 E	122/5800 RÜV[2])	9.2
103.940 KE	124.026	260 E	125/5600 ECE[3])	10.0
103.940 KE	124.027	260 E LWB	115/5800 NV/RÜV	8.0
103.940 KE	124.027	260 E LWB	125/5600 ECE	10.0
103.941 KE	126.020	260 SE	118/5800 KAT[1])	9.2
103.941 KE	126.020	260 SE	115/5800 NV/RÜV	8.0
103.941 KE	126.020	260 SE	122/5800 RÜV[2])	9.2
103.942 KE	201.029	190 E 2.6	121/5800 KAT	9.2
103.942 KE	201.029	190 E 2.6	118/5800 KAT except (S)	9.2
103.942 KE	201.029	190 E 2.6	115/5800 NV/RÜV	8.0
103.942 KE	201.029	190 E 2.6	122/5800 RÜV[2])	9.2
103.943 KE	124.226	260 E 4MATIC	118/5800 KAT	9.2
103.943 KE	124.226	260 E 4MATIC	115/5800 NV/RÜV	8.0
103.943 KE	124.226	260 E 4MATIC	122/5800 RÜV[2])	9.2
103.980 KE	124.030	300 E	130/5600 NV/RÜV	8.0
103.980 KE	124.030	300 E	140/5600 ECE[3])	10.0
103.981 KE	126. 024	300 SE	135/5700 KAT (AUS)	9.2
103.981 KE	126. 024	300 SE	136/5700 RÜF[2])	9.2
103.981 KE	126. 024	300 SE	132/5700 KAT[1]) (USA)	9.2
103.981 KE	126. 024	300 SE	130/5600 NV/RÜV	8.0
103.981 KE	126. 024	300 SE	138/5700 RÜV[2])	9.2
103.981 KE	126. 025	300 SEL	135/5700 KAT except (J), (S)	9.2
103.981 KE	126. 025	300 SEL	132/5700 KAT[1])	9.2

Engine	Model	Sales designation	Output in kW at rpm	Compression ε:1
103.981 KE	126. 025	300 SEL	130/5600 NV/RÜV	8.0
103.981 KE	126. 025	300 SEL	138/5700 RÜV[2])	9.2
103.982 KE	107.041	300 SL	132/5700 KAT[1]) (CH), (S)	9.2
103.982 KE	107.041	300 SL	130/5600 NV/RÜV	8.0
103.982 KE	107.041	300 SL	138/5700 RÜF[2])	9.2
103.983 KE	124.030	300 E	135/5700 KAT (AUS), (J)	9.2
103.983 KE	124.030	300 E	136/5700 RÜF [2])	9.2
103.983 KE	124.030	300 E	132/5700 KAT[1]) (AUS), (J), (USA)	9.2
103.983 KE	124.030	300 E	130/5600 NV/RÜV	8.0
103.983 KE	124.030	300 E	138/5700 RÜV[2]) (CH)	9.2
103.983 KE	124.050	300 CE	132/5700 KAT[1]) (S), (USA)	9.2
103.983 KE	124.050	300 CE	130/5600 NV/RÜV	8.0
103.983 KE	124.050	300 CE	138/5700 RÜV[2])	9.2
103.983 KE	124.050	300 CE	135/5700 KAT (AUS)	9.2
103.983 KE	124.090	300 TE	132/5700 KAT[1]) (CH), (S), (USA)	9.2
103.983 KE	124.090	300 TE	130/5600 NV/RÜV	8.0
103.983 KE	124.090	300 TE	138/5700 RÜV[2])	9.2
103.983 KE	201.029	AMG 190E 3.2	172/5750 ECE	9.2
103.984 KE	129.060	300 SL	138/5700 KAT	9.2
103.984 KE	129.060	300 SL	140/5700 RÜV	9.2
103.985 KE	124.230	300 E 4MATIC	132/5700 KAT[1]) (CH), (S)	9.2

[1]) Standard as of 08.1986
[2]) Optional equipment as of 08.1986
[3]) up to 07.1987
KE Mechanically/Electronically controlled gasoline injection system
ECE Vehicles are not equipped with closed-loop catalytic converter
RÜF Vehicles are suitable for retrofitting a closed-loop catalytic converter

Engine	Model	Sales designation	Output in kW at rpm	Compression ε:1
103.985 KE	124.230	300 E 4MATIC	130/5600 NV/RÜV	8.0
103.985 KE	124.230	300 E 4MATIC	138/5700 RÜV[2])	9.2
103.985 KE	124.290	300 TE 4MATIC	132/5700 KAT[1]) (CH), (S)	9.2
103.985 KE	124.290	300 TE 4MATIC	130/5600 NV/RÜF[2])	8.0
103.985 KE	124.290	300 TE 4MATIC	138/5700 RÜF[2])	9.2
103.987 KE	463.207	Convertible		
103.987 KE	463.227	Station		
103.987 KE	463.228	G300 Station LWB		

[1]) Standard as of 08.1986
[2]) Optional equipment as of 08.1986
[3]) up to 07.1987
KE Mechanically/Electronically controlled gasoline injection system
ECE Vehicles are not equipped with closed-loop catalytic converter
RÜF Vehicles are suitable for retrofitting a closed-loop catalytic converter

01–0085 Warning instructions when hood open

⚠

There is a risk of injury when the hood is open and the engine running.

The engine is equipped with an electronic ignition system. Because of the high ignition voltage it is extremely hazardous to touch components of the ignition system (ignition coil, ignition distributor, ignition cables, spark plug connector, test socket) if

- the engine is running
- the engine is started
- the key is in position 2 in the steering lock and the engine is cranked by hand.

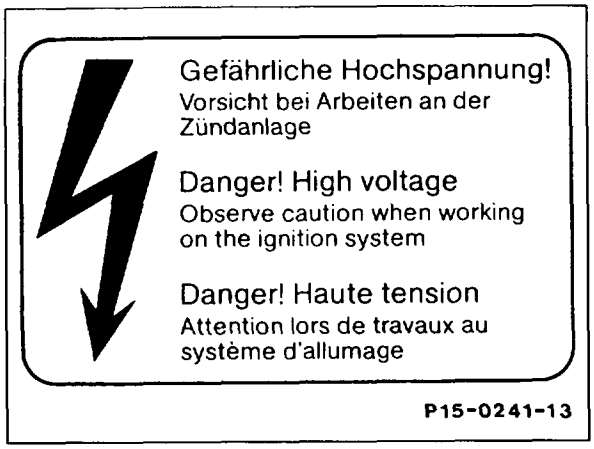

01-0100 Testing compression pressure

Operation no. of operation texts and work units or standard texts and flat rates
01-1200

Test data for engine at normal operating temperature		Gauge pressure in bar
Minimum compression pressure at	normal compression	approx. 12
	low compression	approx. 7.5
Permissible difference between individual cylinders		max. 1.5

Special tool

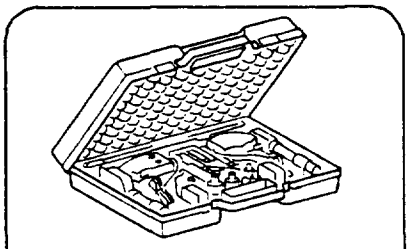

001 589 76 21 00

1 Warm engine up to operating temperature.

Note
Test compression pressure only when engine at normal operating temperature.

2 Remove spark plugs (15-1031).

Testing

3 Crank engine with starter (01-0110).

Note
Crank engine several times in Neutral position and with parking brake applied in order to expel residues and soot.

4 Insert diagram sheet into the compression pressure recorder.

5 Press ceiling cone of the compression pressure recorder into the spark plug hole of cylinder 1.

6 Open throttle valve fully.

7 Rotate crankshaft about 8 revolutions with starter (01-0110).

8 Test all the cylinders in this way.

Note
If the minimum compression pressure is not reached, test cylinders for leaks (01–0150).

9 Clean spark plug recesses by blowing out with compressed air. Remove residues on the tapered ceiling seat.

10 Install spark plugs (15-1031).

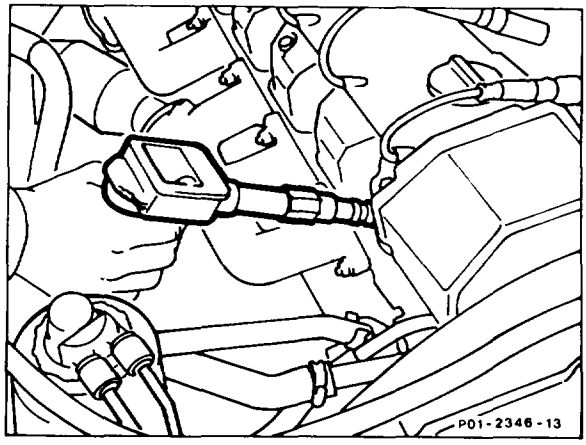

01–0110 Cranking engine with starter

Preceding work:
Warning instructions when hood open (01-0085).

Models 107, 124, 126, 201

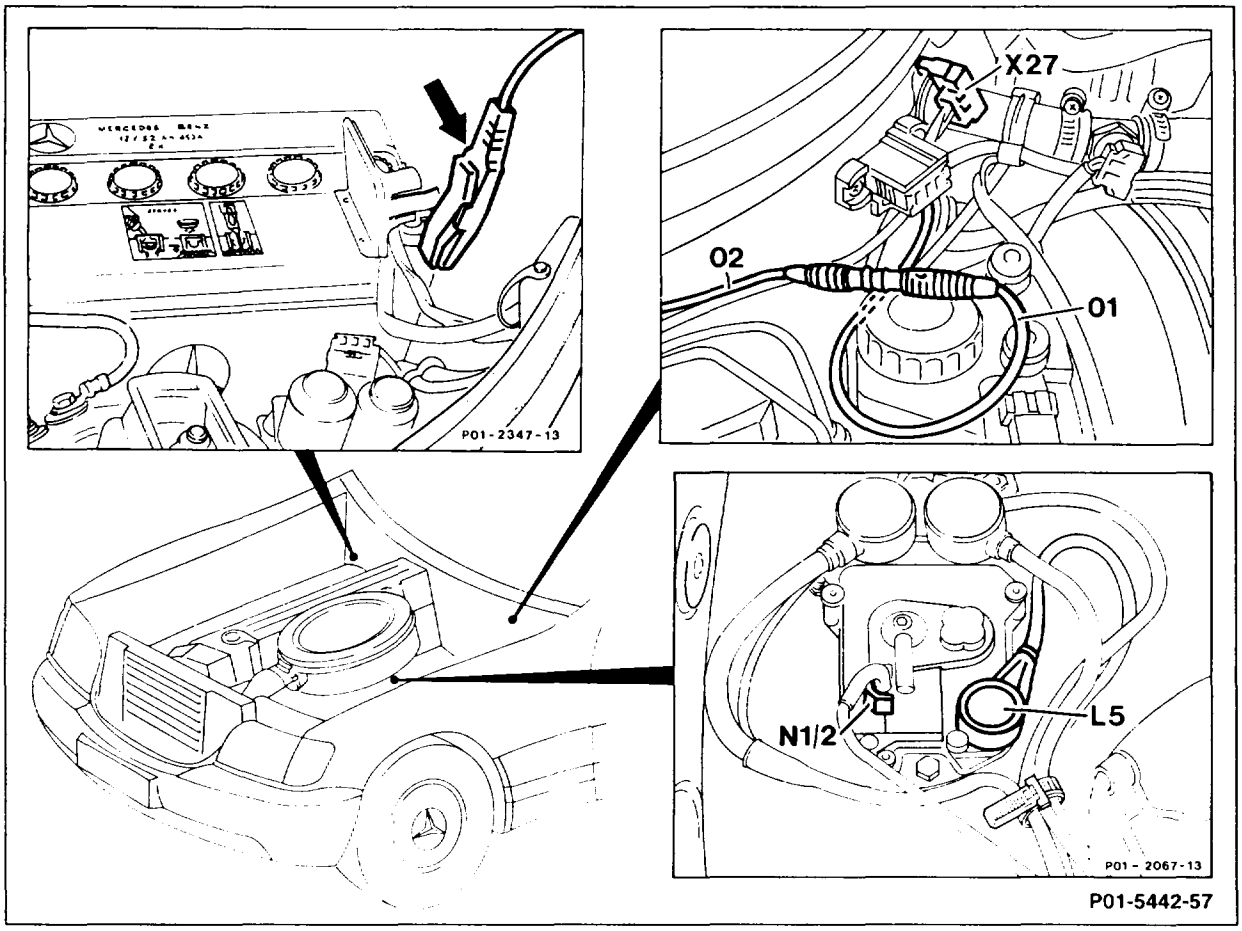

Ignition	switch off.
Plug connection of crankshaft position sensor (L5) at EZL ignition control unit (N1/2)	unplug, plug in.
Clamp (arrow) of compression pressure recorder 001 589 76 21 00	clamp onto positive cable of battery (arrow).
Connector of plug connection (X27)	unplug.

Note

Model 107: The plug connection (X27) is located on the left next to the battery.

Adapter cable (01) 124 589 36 63 00	connect to plug connection (X27).
Adapter cable (01)	connect to cable (02) of compression pressure recorder.
Engine	crank by pressing contact handle on compression pressure recorder.

Preceding work:
Warning instructions when hood open (01-0085).

Model 129

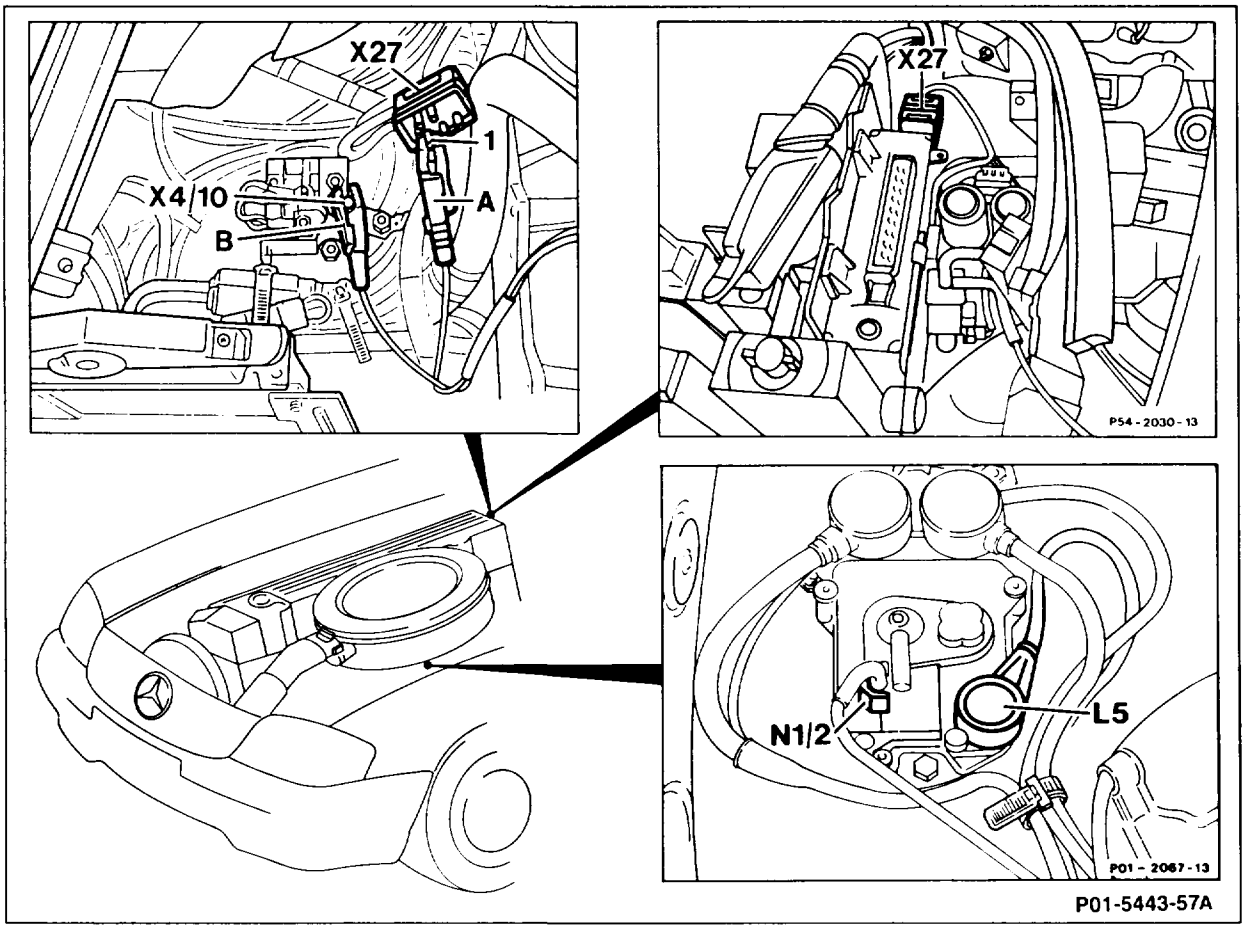

Ignition . . . . . switch off.

Plug connection of crankshaft position sensor (L5) at EZL ignition control unit (N1/2)	unplug, plug in.
Cover above component compartment panel	remove, install.
Connector of plug connection (X27)	unplug.
Clamp (A) of compression pressure recorder 001 589 76 21 00	connect at pin 1 of plug connection (X27).
Clamp (B) of compression pressure recorder	connect to terminal block (X4/10).
Engine	crank by pressing contact handle on compression pressure recorder.

Special tools

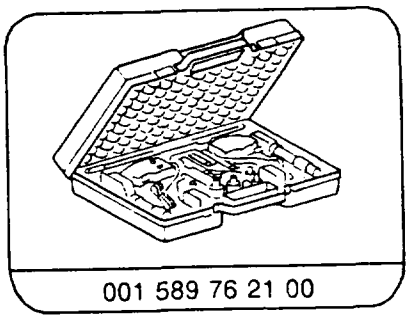

001 589 76 21 00

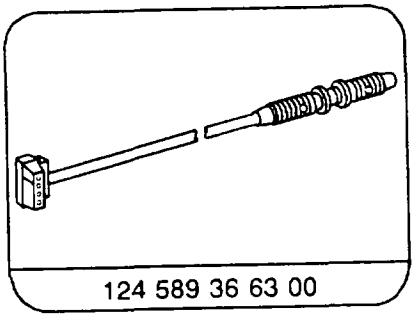

124 589 36 63 00

01–0150 Testing cylinders for leaks

Preceding work:
Air cleaner removed (09–1051).

Operation no. of operation texts and work units or standard texts and flat rates
01–1300

Data

Total pressure loss	max. 25 %
At valves and cylinder head gasket	max. 10 %
At pistons and piston rings	max. 20 %

Commercially available tools and testers

Designation	eg. make, order no.
Cylinder leaktightness tester	eg. Bosch, E F A W 210 A Sun, CLT 228

Testing

1 Run engine until it is at normal operating temperature.

2 Blow out recesses of spark plugs with compressed air.

3 Remove spark plug (15-1031).

4 Top up coolant and leave filler opening at coolant expansion tank open.

5 Take off oil filler cap.

6 Connect cylinder leaktightness tester to a compressed air system and calibrate tester.

7 Position piston of cylinder 1 to ignition TDC.

Note
The respective pistons are at ignition TDC or in TDC position if the markings shown in the drawing opposite (arrows) on the vibration damper are aligned with the TDC pointer.

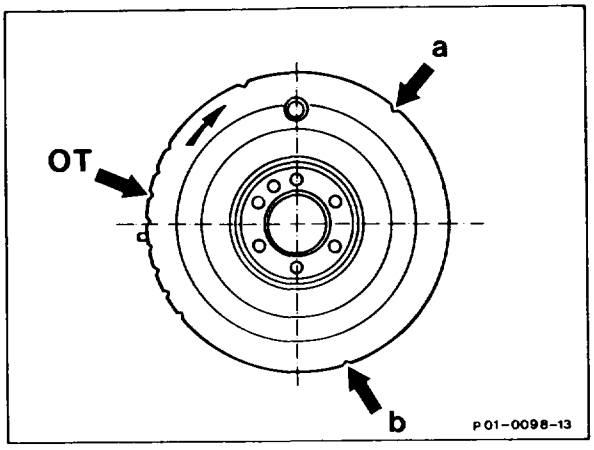

Marking	TDC	b = 120°	a = 240°
Piston at TDC at cylinder	1 and 6	2 and 5	3 and 4

8 Screw connection hose into the 1st spark plug hole, fit on connection hose of tester and pressurize compression chamber (approx. 5 bar). The crankshaft must not move when performing this step.

9 Take reading of pressure loss on tester (in %).

10 Fully open throttle valve.

11 Listen to determine whether the pressure escapes through inlet manifold, exhaust, oil filler opening, spark plug hole of adjacent cylinder or coolant filler opening.

12 Test all the cylinders in the firing order (1–5–3–6–2–4).

Note
After spraying oil onto the piston crown, it is possible to determine whether the leak exists at the piston rings or at the valves, or at the cylinder head gasket.

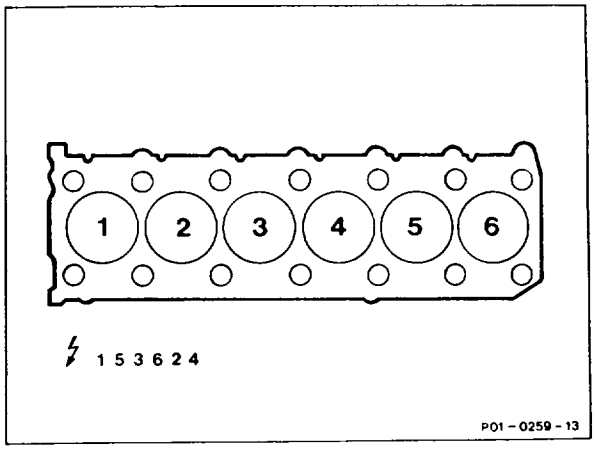

01–0200 Inspecting, assessing cylinders with inspection lamp

Preceding work:
Removing and installing spark plugs (15–1031).

Operation no. of operation texts and work units or standard texts and flat rates
01–1321

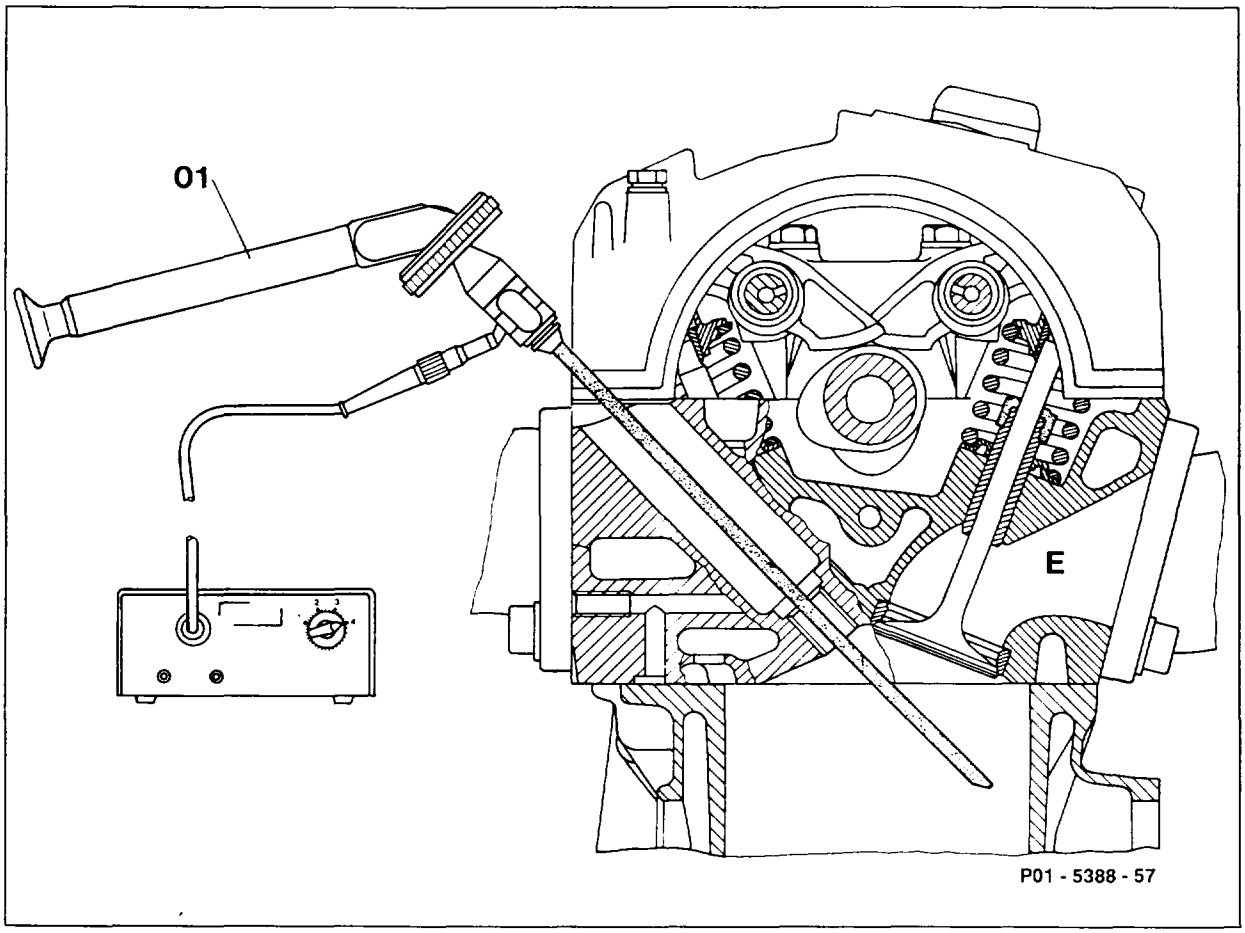

Piston	move into BDC, see table.
Motoskop and lense probe	connect. Motoskop TW 12 V to vehicle battery Motoskop TW 220 V to mains.
Cylinder	illuminate, assess, see note.

Commercially available tool	
Cylinder inspection lamp	eg. Karl Storz GmbH, D–78532 Tuttlingen Motoskop TW (cold light) with lense probe 103 26 CW (570 mm)

Marking number on TDC pointer	Piston in BDC position
60	3 and 4
180	1 and 6
300	2 and 5

Note

A distinction must be made in the case of markings on the cylinder surface between "optical stripes" or "rub stripes".

Optical stripes are not roughened and may originate from the ring gap. The traces of honing are still visible.

In the case of rub stripes or cylinder wear, the cylinder surface is roughened or smoothed and the traces of honing are no longer visible.

01–0300 Removing and installing engine

Preceding work:
Bottom engine compartment panel removed (Maintenance Manual Volume 2, Op. no. 6190).
Air cleaner removed (09–1051).
Radiator removed (20–4200).
Viscous fan coupling removed (20–3120).

Operation no. of operation texts and work units or standard texts and flat rates
01–2400, 01–2800

A. Model 124 and 124 4MATIC

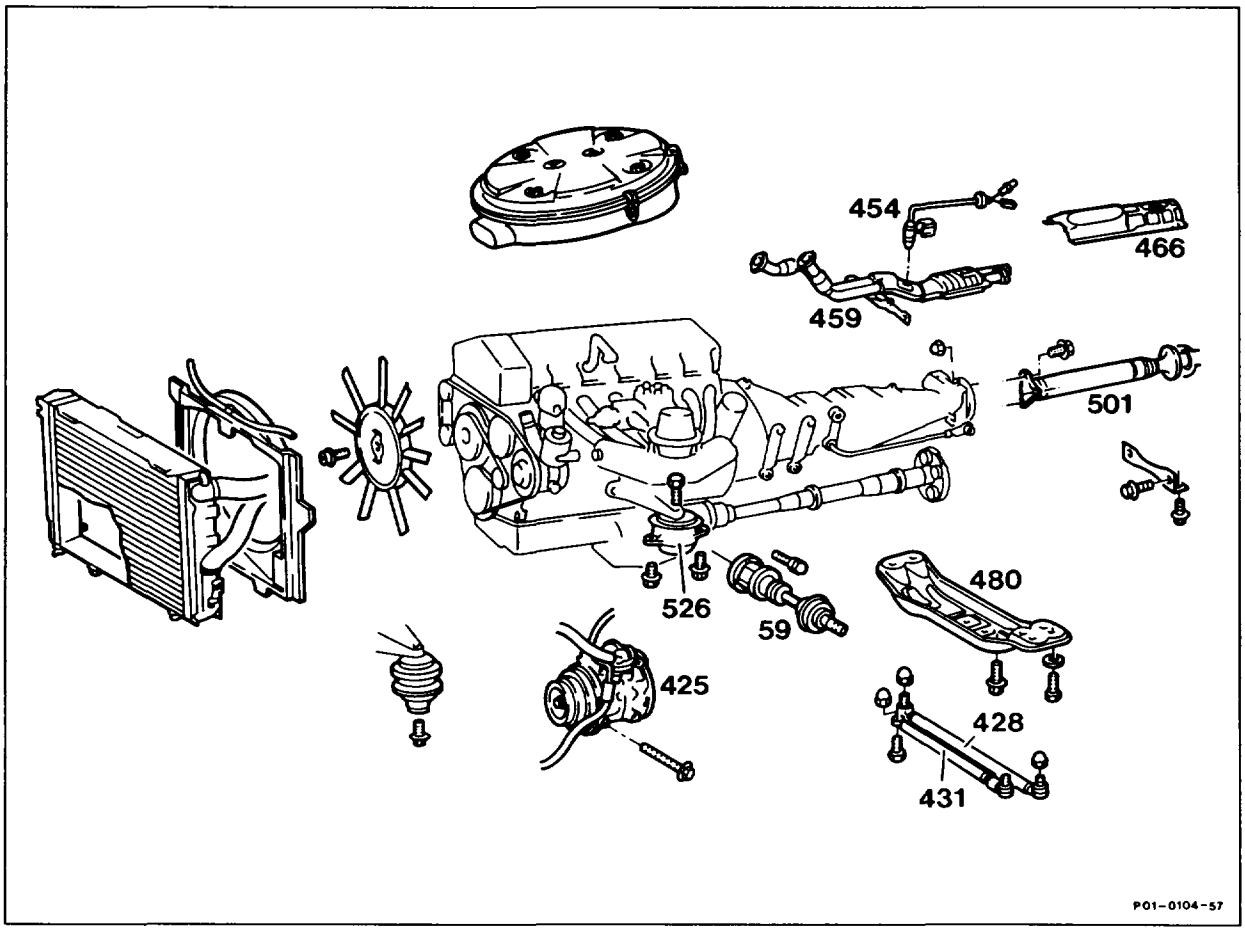

Illustration shows Model 124 4MATIC.

Ground cable at battery	disconnect, connect (step 1).
If air conditioning fitted	attach guard plate to condensor, remove poly V-belt and fit on (13–3420) (steps 2 – 3).
Power steering pump	extract oil from reservoir, pour in oil to correct level (46–7150) (step 7).

Oil lines	detach, attach (step 8).
If air conditioning fitted	detach refrigerant compressor (425) with piping group connected, place to the side, attach, 25 Nm (step 9).
Hydraulic system, high-pressure expansion hose (4MATIC)	depressurize, move lever on service valve to test position, unscrew and screw on (steps 5 – 6).
Fuel lines	detach and seal, briefly open fuel filler cap before, attach (step 10).
Bowden cable (accelerator control)	detach, attach (30–3402) (step 11).
Electrical connections and engine wiring harness	detach, attach (steps 12 and 13).
Heating hoses and vacuum lines	detach, attach (step 14).
Lambda sensor (454)	remove, install (step 22).
Exhaust system and shield above exhaust system	remove, install (49–7000) (step 23).
Cross bar (4MATIC)	remove, install 25 Nm (step 24).
Propeller shaft (501) at flexible joint	detach, attach 45 Nm, renew self-locking nuts (step 25).
Clamping nut and intermediate bearing mounting	slacken, tighten 35 and 35 Nm (steps 26 and 27).
Shift rods on transmission	detach, attach (steps 31 and 32).
Starter lockout switch (automatic transmission)	turn locking element, detach connector and fit on (step 32).
Hydraulic line for clutch	unscrew, screw on (step 33).
Drag link (428) with steering damper (431)	remove and install, renew self-locking nuts and bolts (46–550) (step 34).
Left, right front axle shafts (59) (4MATIC)	detach, attach on inside, 70 Nm, and secure joints with wire (step 35).
Engine hoist to suspension lugs	attach, detach (step 36).
Transmission	support (step 38).
Guard plate on component compartment wall	insert, remove (step 37).
Rear engine support (480) without engine mount	remove, install 4MATIC 20 Nm, Model 124 35 Nm (steps 39 and 40).
Front engine mounts (526 and 522) left and right	unscrew, screw on from below, 4MATIC 20 Nm, Model 124 40 Nm (step 41).

Engine with engine hoist	raise, lower (step 42).
	Installation note Replace seal at heater feed pipe (engine suspension eye)
Front and rear engine mounts	check.
Coolant, oil and fuel hoses	check.
If automatic transmission fitted	adjust cable for control pressure (27–100).
Idling	check and adjust
Oil drain plugs	check tightening torque.
Oil level in engine and transmission	adjust to correct level.
Coolant	pour in, check anti-corrosion/antifreeze protection and adjust to correct level (20–0100).
Hydraulic system (4MATIC)	bleed (steps 49 to 53).
Fault memory	read, erase.
	Note After completing the work, faults stored in the fault memories must be processed (rectified cause) and erased. See Diagnosis Manual Volume 2: Index 0: connecting and using testers.
Engine	run and check for leaks.

Special tools

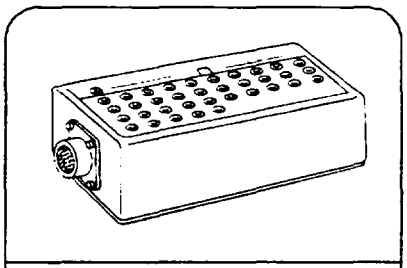

124 589 00 21 00

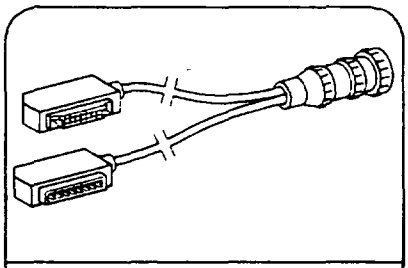

124 589 33 63 00

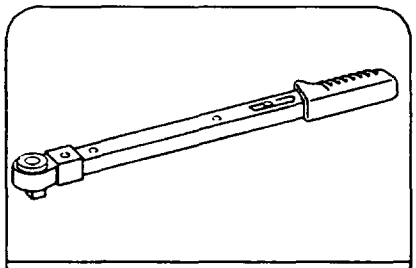

001 589 66 21 00

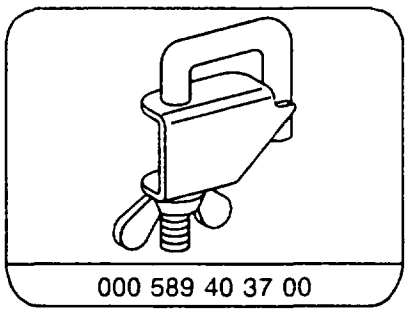

000 589 40 37 00

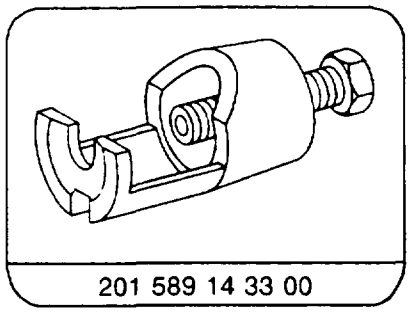

201 589 14 33 00

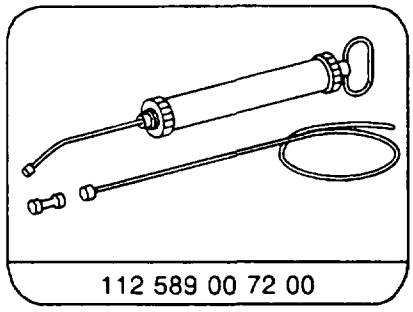

112 589 00 72 00

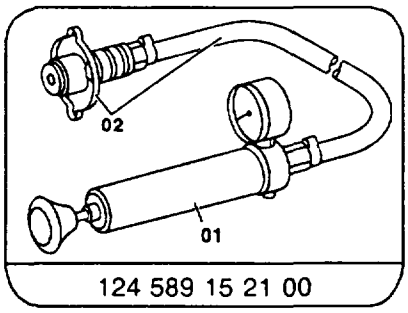

124 589 15 21 00

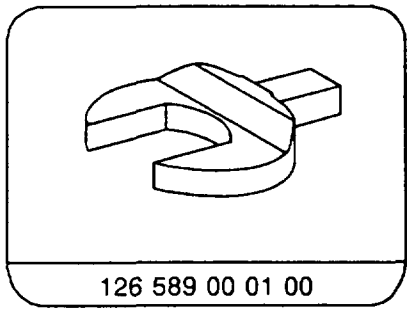

126 589 00 01 00

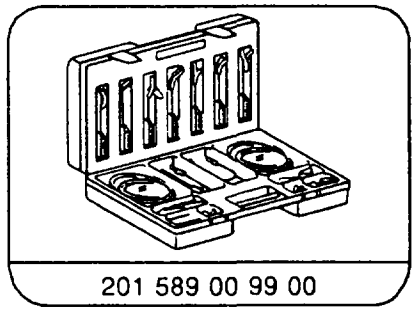

201 589 00 99 00

Commercially available tools and testers

Designation	
Engine hoist No. 3188 self-locking	eg. Wilhelm Bäcker Herder Str. D–42853 Remscheid
Anti-corrosion/antifreeze tester Preston-VU-Check	eg. Philipp Gather D–40822 Mettmann 2

Shop-made tools

Guard plate for radiator/condensor	Dim. approx. 480 × 600 × 1
Metal panel for component compartment wall	Dim. approx. 320 × 380 × 1

Note

Remove, install engine with transmission, if 4MATIC fitted with transfer case and front propeller shaft.
4MATIC reconditioned engines are supplied with assembly oil sump. This must be converted (01–3200).

⚠

Do not strike or place a load on lube oil line on transfer case when engine positioned at an angle because this may cause it to leak.

⚠

In the case of engine damage affecting the pistons, valves etc., parts may get in up to just before the catalytic converter or pre-catalytic converter.
When exchanging the engine, it is essential to remove these parts otherwise they may be pulsed back into the cylinders as a result of gas vibrations in the exhaust system and again cause engine damage.
In addition, these parts may cause mechanical damage to the catalytic converter. In dealing with such engine damage, it is therefore essential to remove these foreign bodies in the exhaust system.
Damaged catalytic converters must be replaced.

Removal, installation

1 Detach ground cable at battery.

2 If air conditioning fitted: attach guard plate (arrow) to condensor of air conditioning system.

3 If air conditioning fitted: remove poly-V-belt (13–3420).

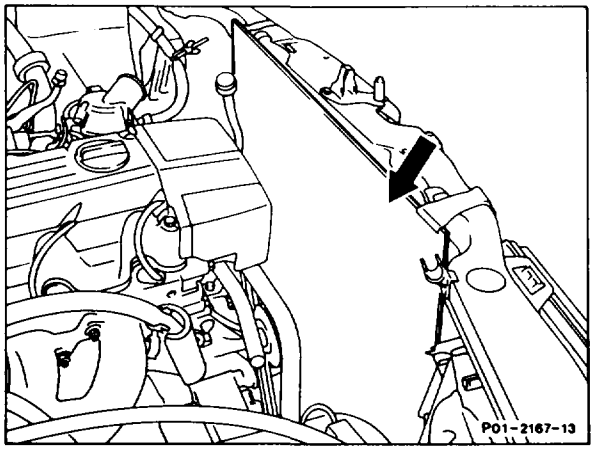

4MATIC

4 Pinch oil hose at bottom of hydraulic oil reservoir (arrow) and detach at power steering pump.

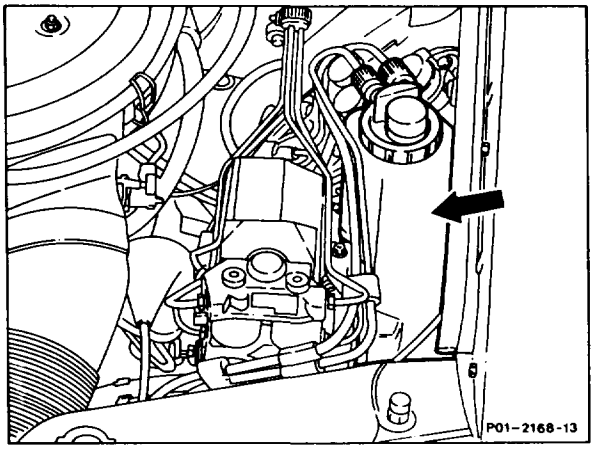

4MATIC

5 Depressurize hydraulic system by moving over lever (test position) on service valve.

A Test position
B Operate position

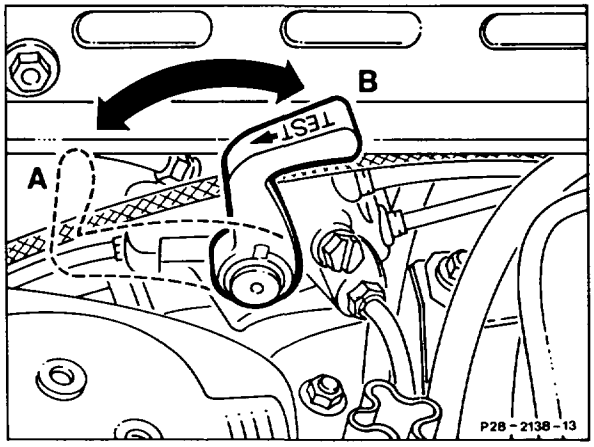

6 Detach screw connection (arrow) at high-pressure expansion hose.

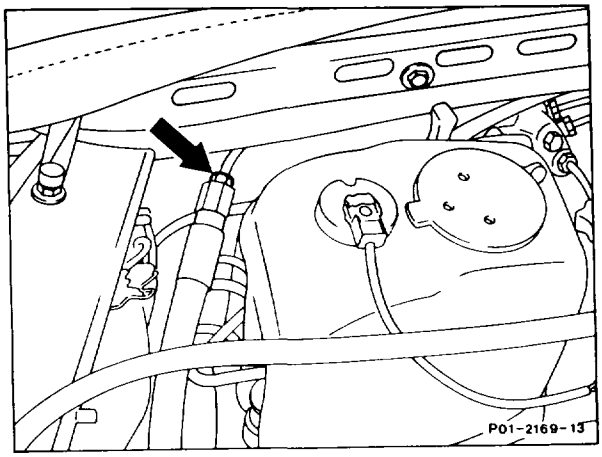

7 Extract oil from the reservoir of the power steering pump with the priming pump.

Installation note
Bleed pressurized oil pump (32–6300).

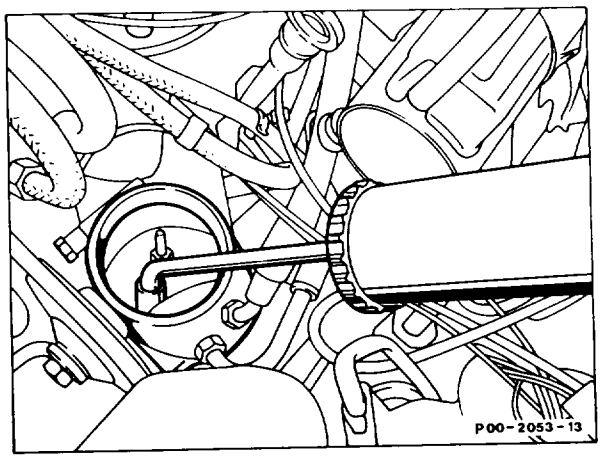

8 Unscrew oil lines (281, 529) to steering gear and oil line (601) for self-levelling suspension at power steering pump.

Installation instruction
Renew seals.
Pay attention to tightening torque of high-pressure expansion hose (281).
Pay attention to tightening torque of return line (529).

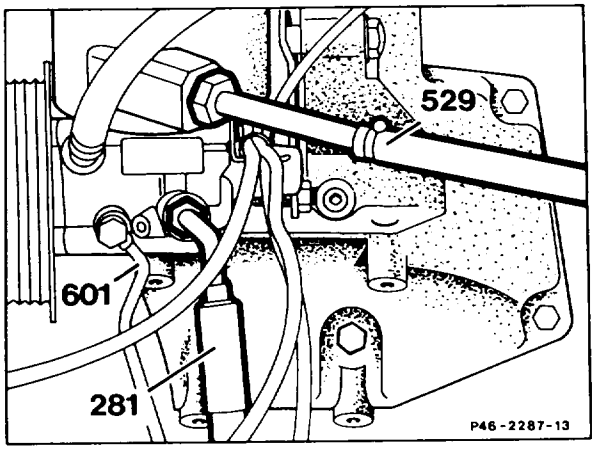

9 Detach refrigerant compressor of air conditioning system from engine.
Unscrew bolts (424). Pay attention to tightening torque. Attach refrigerant compressor with pipe group connected at the side in bottom of engine compartment.

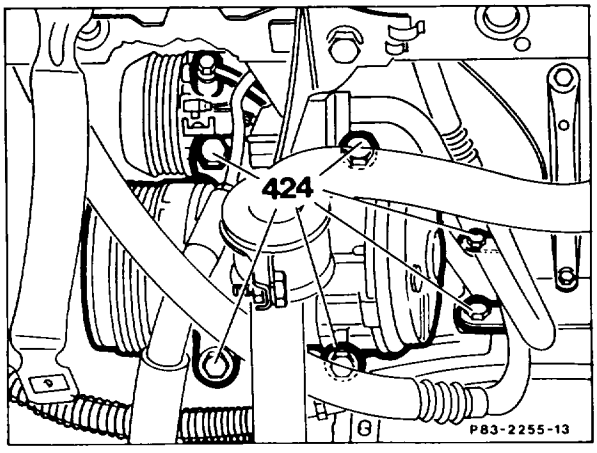

10 Briefly open the fuel filler cap to release the pressure in the fuel tank.
Unscrew fuel lines (380, 379). Hold the connection fitting (arrow) when detaching the fuel line (380).

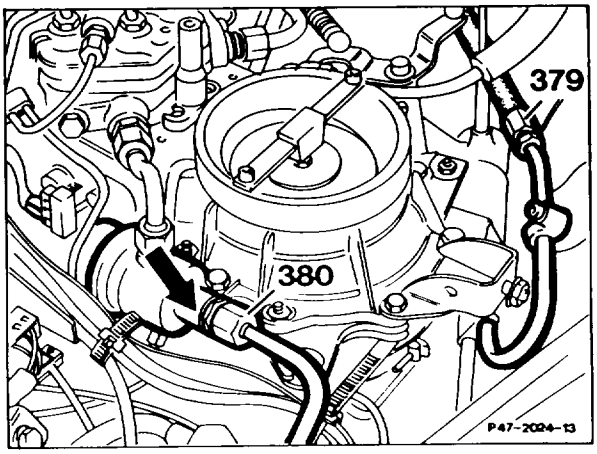

11 Detach Bowden cable of accelerator control. Press plastic guide (517) out of its seat in the fulcrum lever (390) and withdraw Bowden cable (403) through the slot in the fulcrum lever. Compress links of the plastic clip (518) and push clip with the Bowden cable (403) to the rear through the bracket.

Installation instruction
Adjust Bowden cable (30–3402).

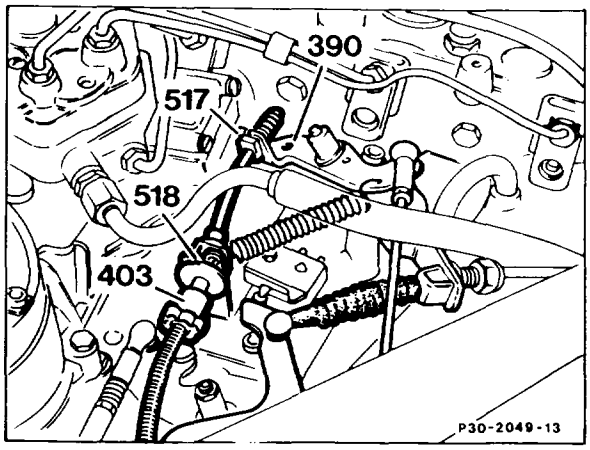

12 Unscrew electric cables. Turn nut (531) down. Unscrew cross-head screw (530). Detach cable from the oil level gauge and from oil pressure sensor.

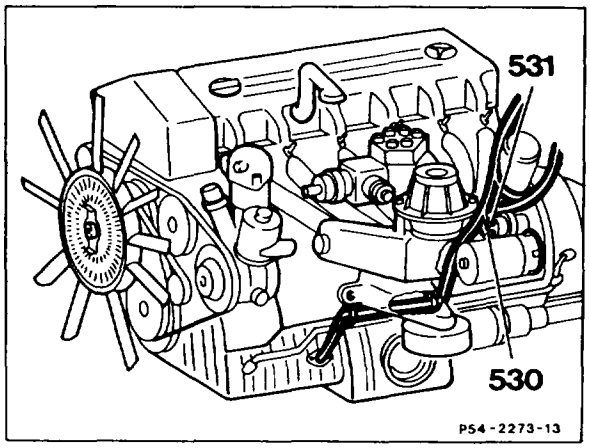

13 Slacken all cable straps of the engine wiring harness. Detach all plug connections along the engine wiring harness.
Remove engine wiring harness (39).

14 Detach heating hoses and vacuum lines in engine compartment.

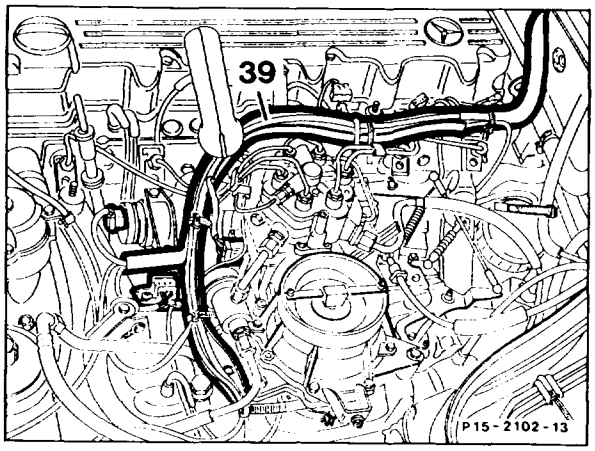

15 Detach green control line from position sensor and vacuum line at ignition control unit connector-sensor.

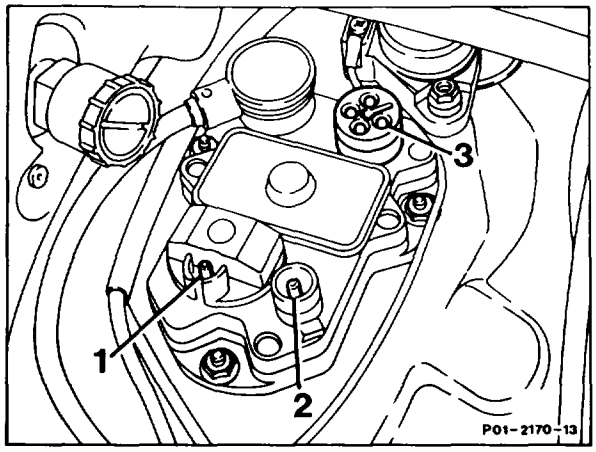

1 Vacuum connection
2 Control line connection
3 Connector-sensor connection

16 Detach extraction line (arrow) of fuel evaporation control system from connector fitting on left wheelhouse.

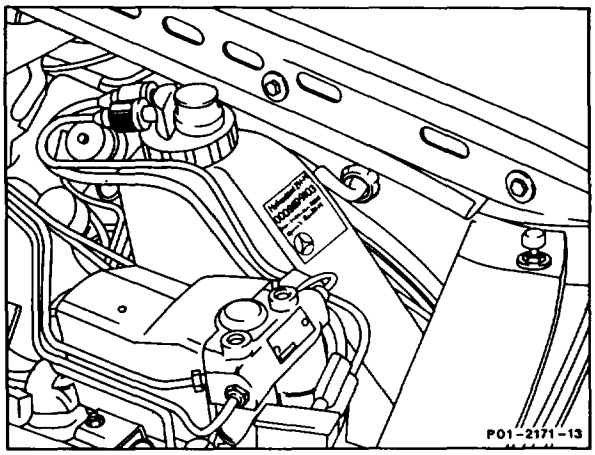

17 Detach terminal block terminal TD (arrow) next to diagnostic socket (X11), unscrew diagnostic socket, detach grey cable from TDC sensor on rear of diagnostic socket.

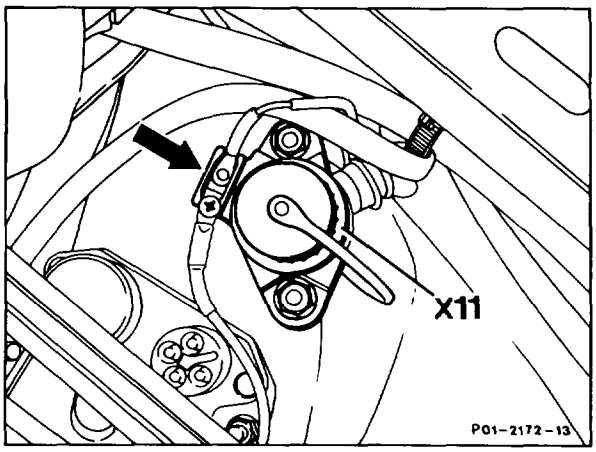

18 Detach connector (327) at alternator.

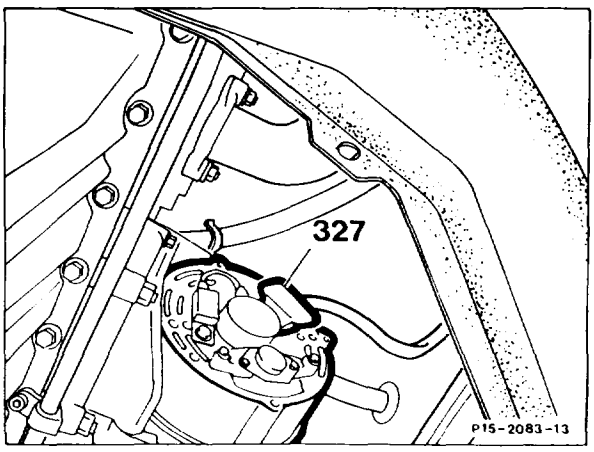

19 Remove rubber sealing strip (1) from component compartment wall.

20 Remove covering of wiring harnesses by unscrewing four plastic screw connections (arrows).

21 If car fitted with self-levelling suspension, unscrew cable bracket at front of engine.

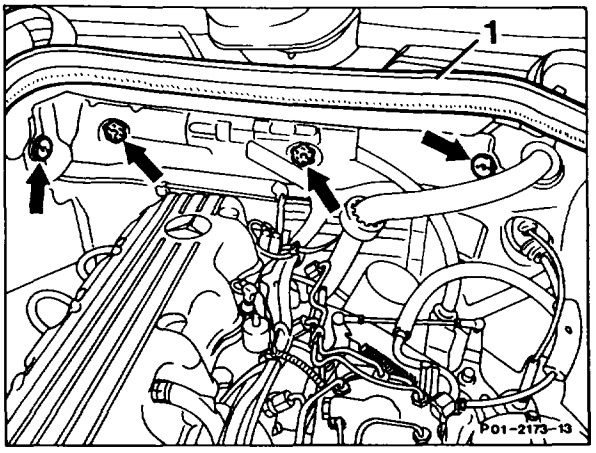

22 Remove guard plate (455), unscrew lambda sensor (454).

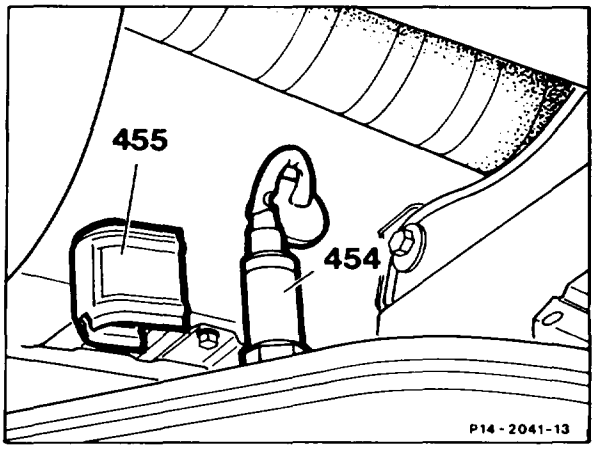

23 Remove exhaust system and shield above exhaust system (49–7000).

4MATIC
Remove shields on transfer case and centre tunnel.

24 Unscrew cross bar (524) on centre tunnel. Pay attention to tightening torque.

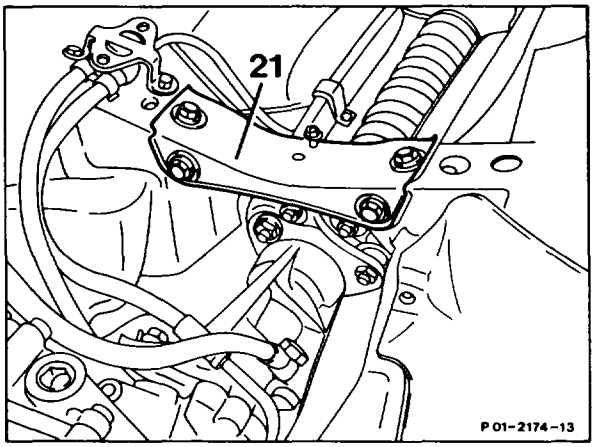

25 Remove propeller shaft.
Unscrew nut (474), withdraw bolt (473). Pay attention to tightening torque. Flexible joint (476) remains on transmission.

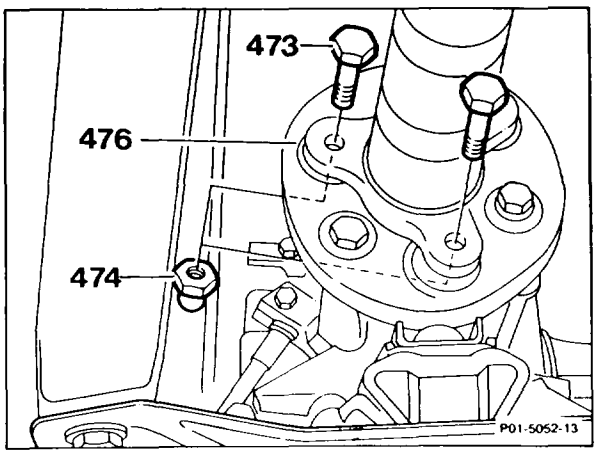

26 Slacken bolts (494) for propeller shaft intermediate bearing, but do not remove. Pay attention to tightening torque.

27 Slacken clamping nut (500) (waf 41/46) from propeller shaft. Push back propeller shaft in direction of arrow as far as possible. Pay attention to tightening torque.

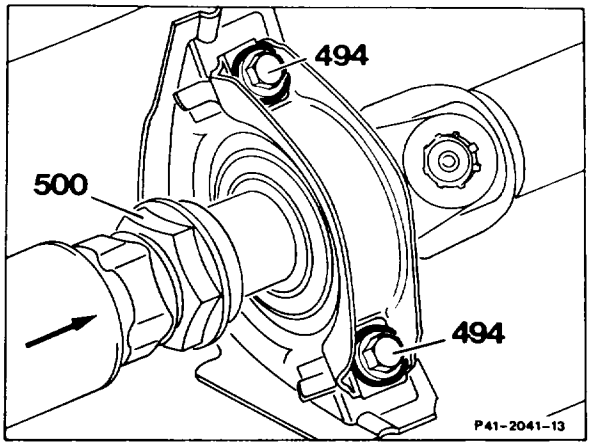

4MATIC

28 Unscrew hydraulic lines (AV, ZS) at transfer case.

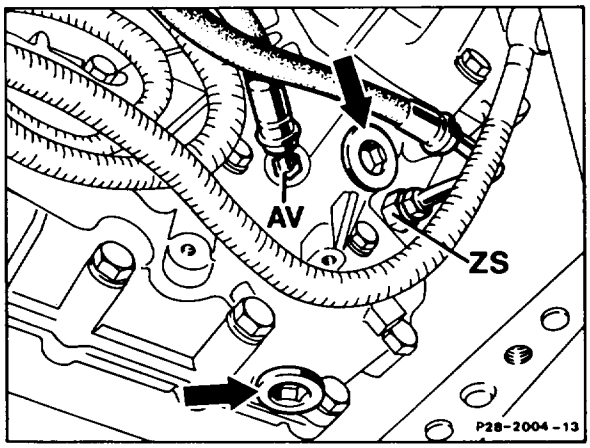

29 Unscrew bolt (404). Withdraw speedometer shaft (405) in direction of arrow.

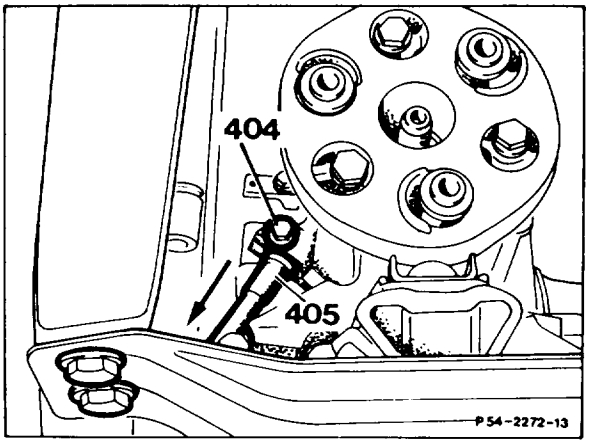

30 Unscrew ground cable (149) at transmission.

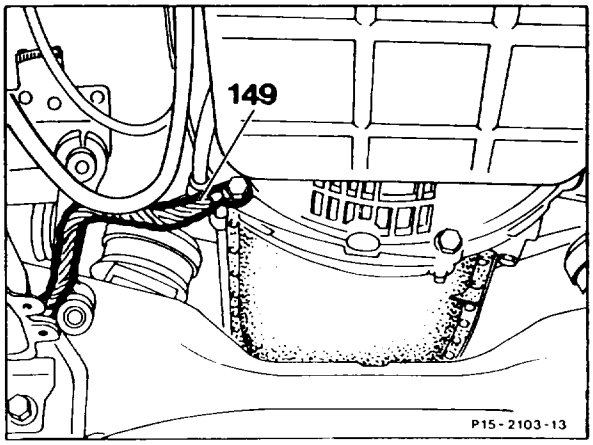

31 If manual transmission fitted: first press the clip locks off the transmission shift levers and then take off shift rods.

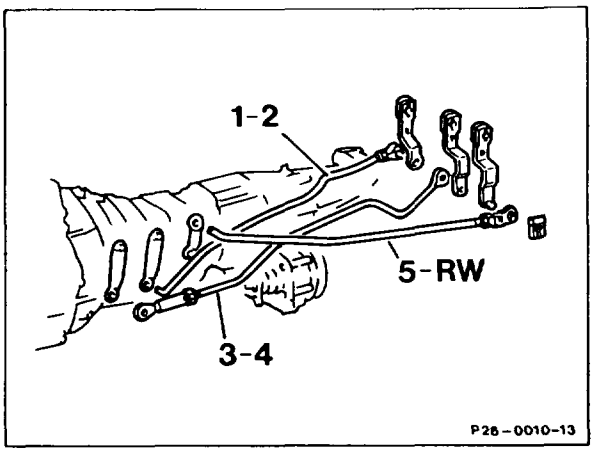

32 If automatic transmission fitted: detach shift rod at centre shift mechanism. Turn white plastic locking element on starter lockup, backup light switch (53) approx. 45° to the right and detach cable connector.
Detach cable at kickdown solenoid valve.

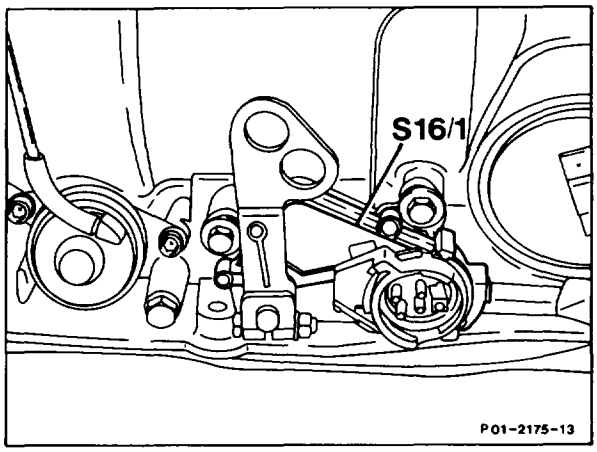

33 If manual transmission fitted: disconnect hydraulic line (arrow) to the slave cylinder at hose screw union.
Seal lines with dummy plugs or extract fluid from the rear chamber of the combined reservoir.

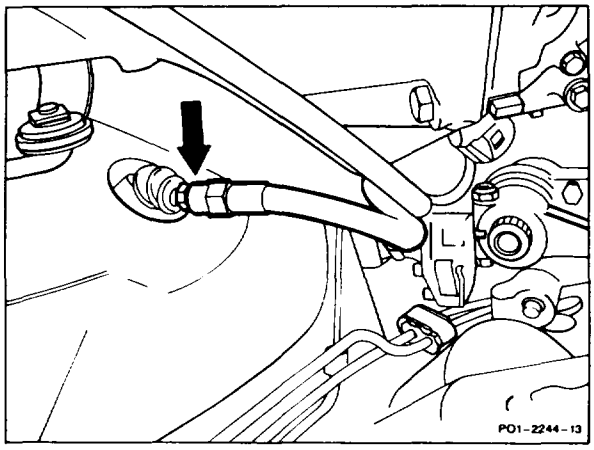

4MATIC

34 Remove drag link (1) together with steering damper. Unscrew steering damper (arrow) at the body.
Remove drag link by using the tapered removing tool 201 589 08 33 00.

Note

Renew self-locking nuts.
Pay attention to tightening torques.

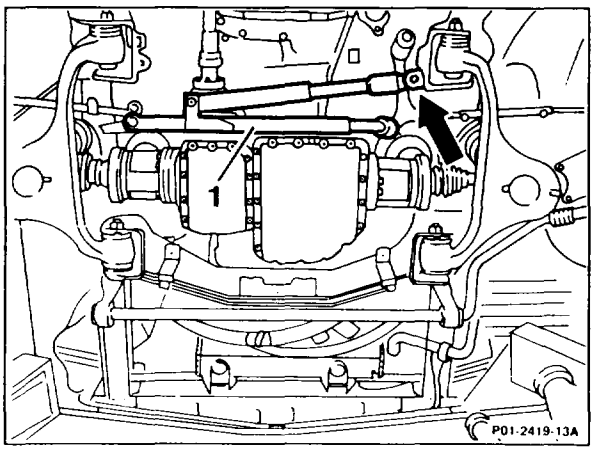

4MATIC

35 Remove front axle shafts (59). Operate footbrake to slacken the six bolts (microencapsulated).
Push front axle shafts together as far as possible and fix in this position with wire.
Place front axle shaft on wishbone arm. Pay attention to tightening torque.

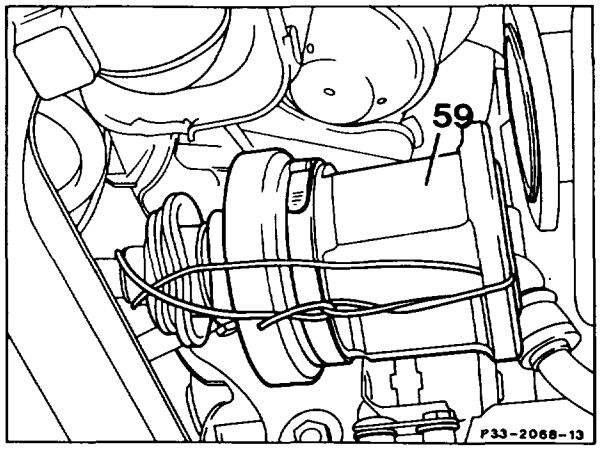

Note

Do not pull inner joint too far apart and wrap to prevent the needle-bearing tripod joint rollers from dropping out of the journals at the tripod cross.

36 Attach engine hoist to the suspension lugs of the engine.
Adjust engine hoist so that the engine can be raised horizontally.

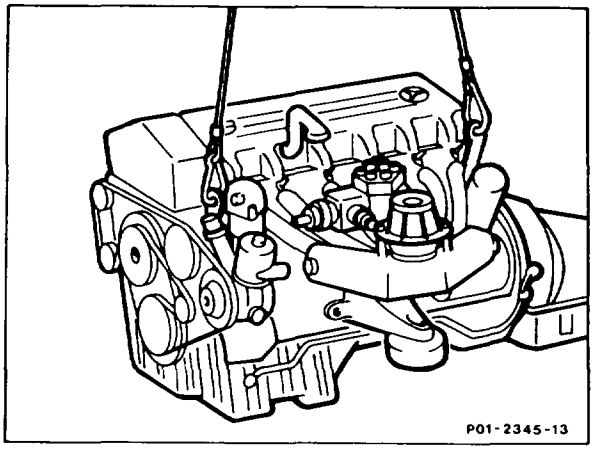

37 Insert guard plate (arrow) between component compartment wall and engine.

38 Support transmission with car jack or inspection pit lift.

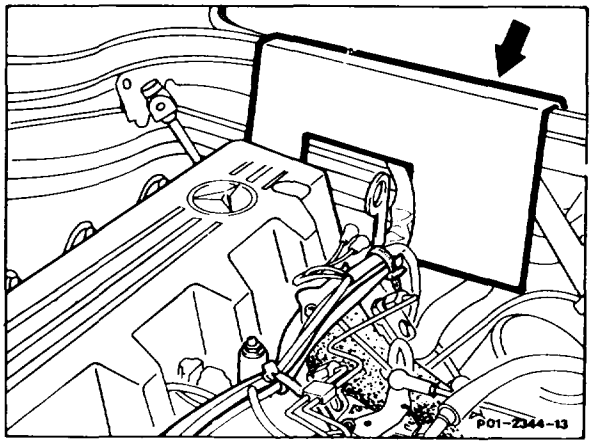

4MATIC

39 Unscrew bolts (arrows). Tightening torque M8 20 Nm.

40 Remove rear engine support. Tightening torque M10 35 Nm.

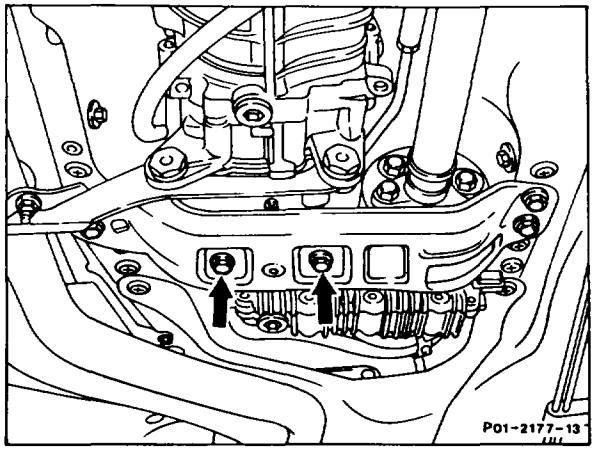

41 Unscrew bolt (523) on left and right front engine mount from below. Tightening torque 40 Nm.

4MATIC

2 bolts from below. Tightening torque 20 Nm.

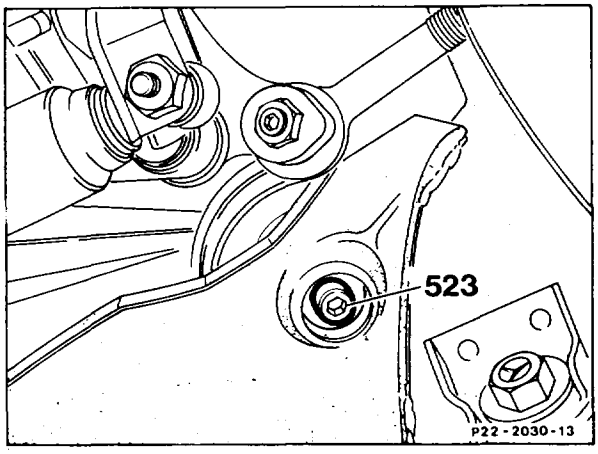

42 Move engine with transmission into inclined position and lift out of engine compartment by adjusting engine hoist several times, or install as appropriate.

Note

When tilting engine, pay attention to rear suspension lug and to the oil filter.

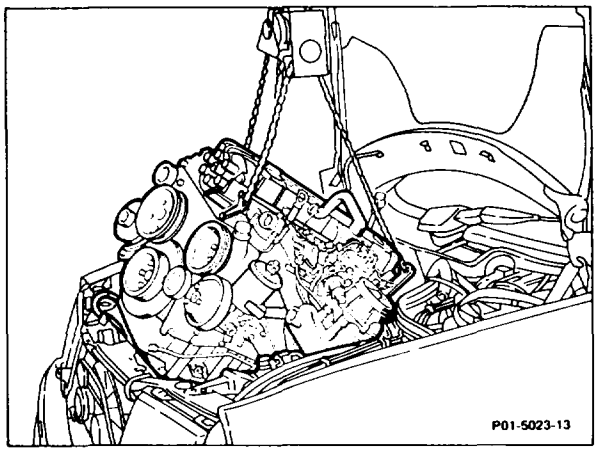

4MATIC

Do not place any load on, and do not strike lube oil line on transfer case (arrow) otherwise this may cause leaks.

a = approx. 30 cm
Hook height at least approx. 260 cm.

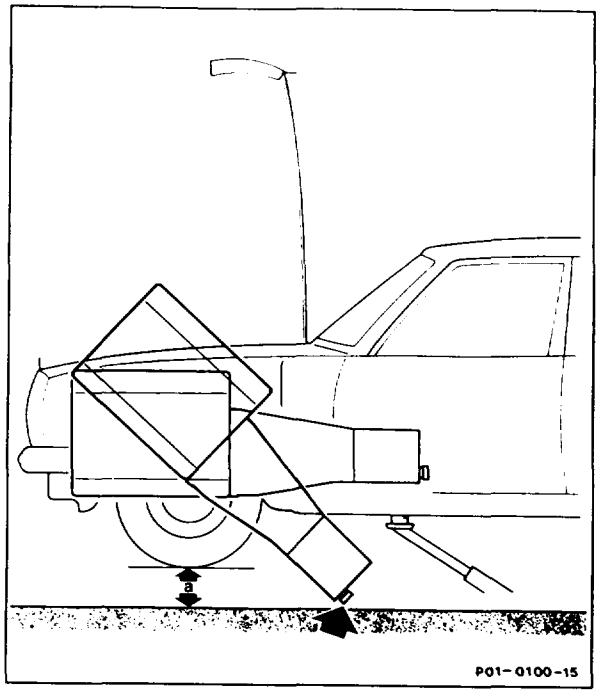

Install in the reverse order.

43 Check front and rear engine mounts.

44 Check coolant, oil and fuel hoses.

45 If automatic transmission fitted: adjust cable for control pressure (27–100).

46 Check tightening torque of oil drain plugs.

47 Adjust engine oil in engine and transmission to correct level.

48 Pour in coolant, check anti-corrosion/ antifreeze agent, adjust to correct level (20–0100).

4MATIC

49 Bleed hydraulic system. Connect contact box 124 589 00 21 00. Disconnect 4MATIC control unit and connect 25-pin connector to the contact box (04) 124 589 00 21 00 with the Y cable (02). The control unit remains disconnected.

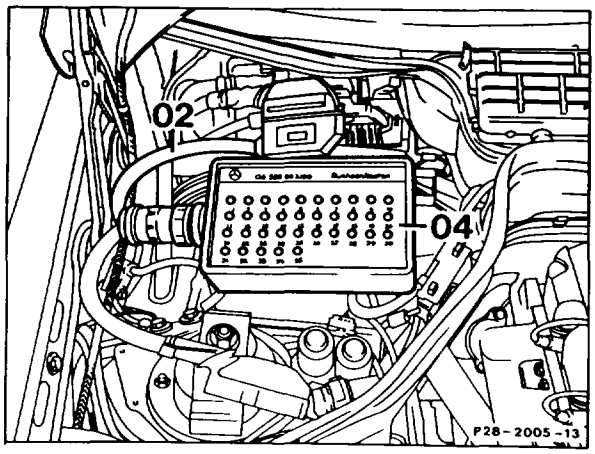

4MATIC

50 Bleed hydraulic oil pump. Check hydraulic oil level in reservoir. Service valve in test position. To bleed, start engine and run for approx. 30 seconds at 1000 – 2000 rpm.
After bleeding, move service valve back to operate position.

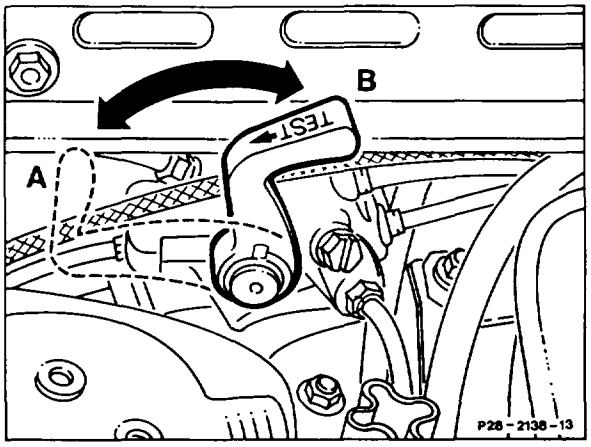

A Test position
B Operate position

4MATIC

51 Detach 25-pin connector from control unit (N 30/3) and connect contact box 124 589 00 21 00.
Service valve in operate position.
Apply parking brake.
Start engine and run at idling speed.

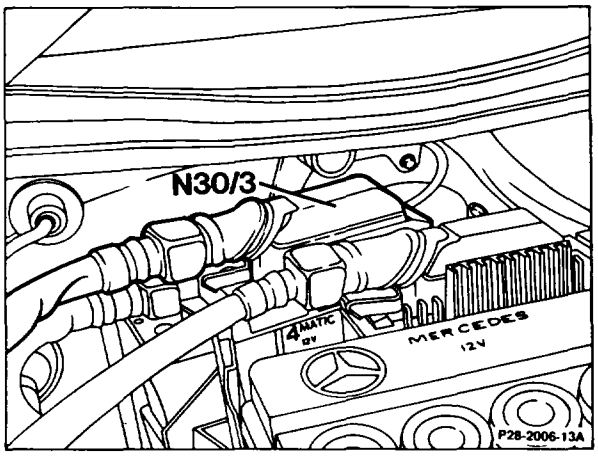

4MATIC

52 Bleed rear axle differential lock. Activate HS solenoid valve by jumpering contact 8 and contact 2 (ground) at contact box 124 589 00 21 00.
Open bleeder (arrow) on rear axle centre section for as long as is necessary for the hydraulic oil to flow out free of bubbles (attach hose).

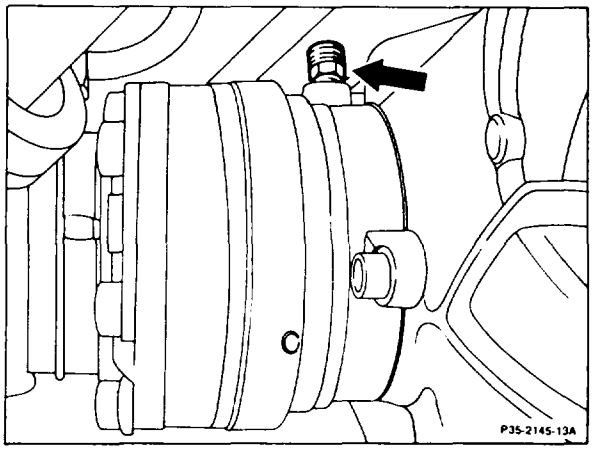

4MATIC

53 Bleed AV and ZS multi-disc clutches. Activate AV and ZS solenoid valve together 20 times by connecting contacts 4 and 6 at the contact box 124 589 00 21 00 and jumpering to contact 2 (ground) 20 times.

Note

The trapped air is removed through the hydraulic oil by actuating the AV and ZS multi-disc clutches several times.

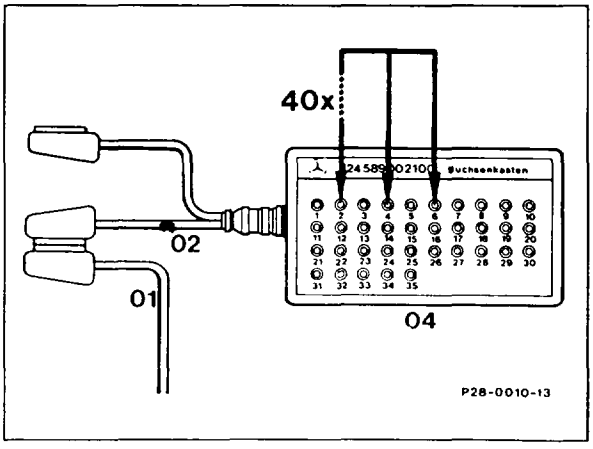

54 Read, erase fault memories.

Note

After completing the work, the faults stored in the fault memories must be processed (rectified cause) and erased.

See Diagnosis Manual Volume 2:
Index 0: connecting and using testers

55 Check idle speed, adjust if necessary

56 Run engine and check for leaks.

B. Model 107, 126, 129, 201

Preceding work:
Hood on model 107 removed (88-300).
Bottom engine compartment panel removed (Maintenance Manual Volume 2, Op. no. 6190).
Air cleaner removed (09-1051).
Radiator removed (20-4200).
Viscous fan clutch removed (20-3120).

Operation no. of operation texts and work units or standard texts and flat rates
01-2400, 01-2800

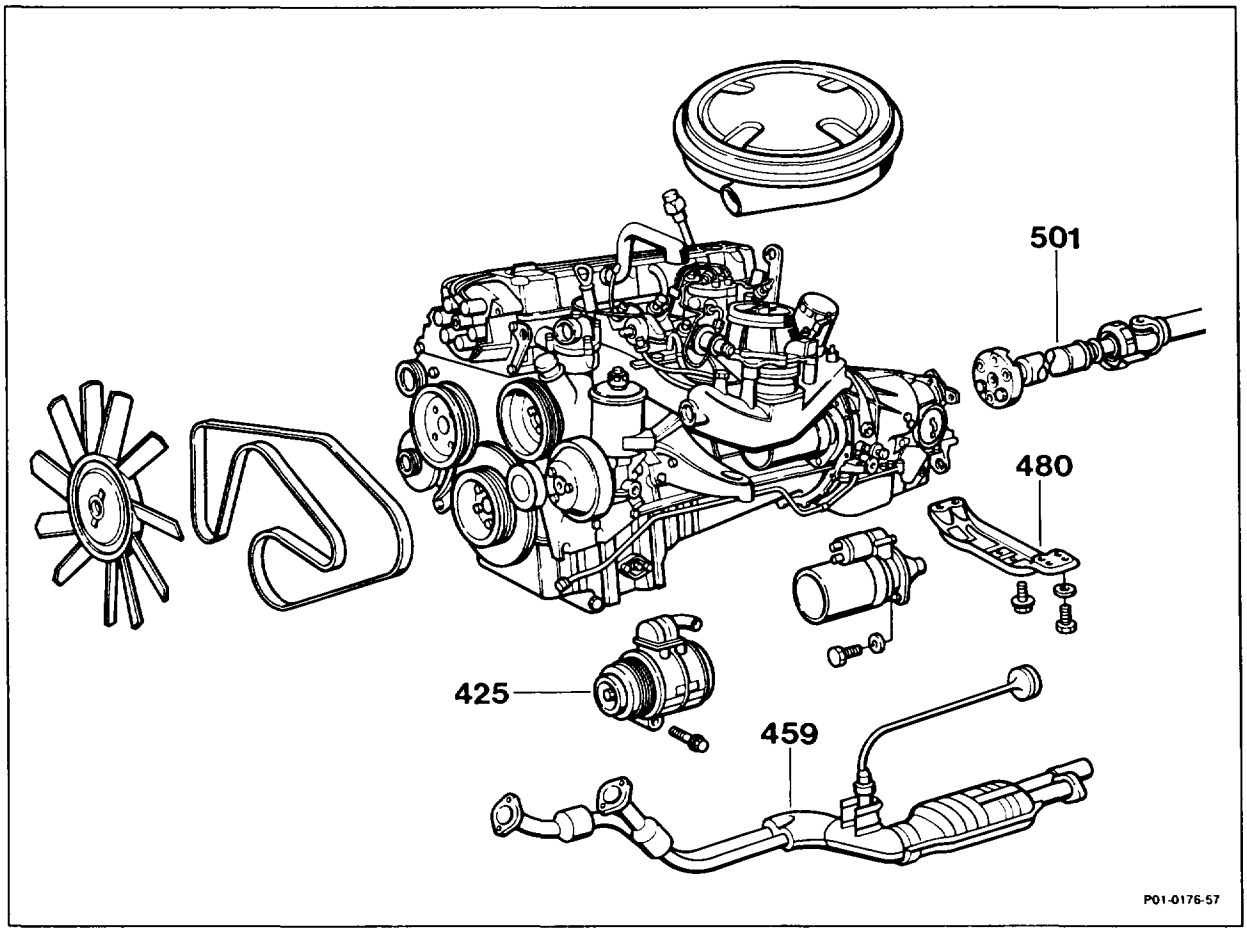

Ground cable at battery	detach, attach.
If air conditioning fitted	attach guard plate to condensor, detach poly V-belt (if AC fitted), attach (13-3420) (steps 2, 3).
If air conditioning fitted	detach refrigerant compressor (425) with pipe group connected, place to the side, attach (step 4).

Power steering pump	extract oil from reservoir, adjust oil to correct level (46–7150) (step 6).
Oil lines of power steering pump	detach, attach. Renew seals (steps 5 and 7).
Fuel lines	detach and seal, briefly open fuel filler cap beforehand, attach (step 8).
Bowden cable (accelerator control) Model 129, 201	detach, attach (30–3402) (step 9).
Accelerator control linkage on Model 107, 126	detach, attach (steps 10 – 11).
Heating hoses and vacuum lines	detach, attach (step 13).
Engine wiring harness	detach, attach (steps 12, 14).
Ignition control unit and diagnostic socket (X11)	detach wiring and connectors, plug in (steps 15, 20).
Vacuum lines	detach, fit on (steps 16 – 18).
Starter on Model 129	remove, install (15–700) (place to side with wiring connected) (step 19).
Alternator on Model 107, 126, 129	detach connector, attach (step 21).
Alternator on Model 201	remove, install (step 22).
Wiring harnesses	remove covering, install (steps 23 – 25)
Lambda sensor	remove, install (step 26).
Exhaust system (459) and shield above exhaust system	remove, install (49–7000) (step 27).
Propeller shaft (501) at flexible joint	detach, attach. Renew self-locking nuts (step 28).
Propeller shaft intermediate bearing	slacken, tighten (step 29).
Clamping nut	slacken, push back and tighten (step 30).
Transmission	unscrew electronic speedometer and ground cable, screw on (steps 31 – 32).
Hydraulic lines for clutch on Model 129	unscrew, screw on (step 33).
Shift rods on transmission	detach, attach (steps 34, 35).
Starter lockout switch (automatic transmission)	turn locking element, detach connector and fit on (step 35).
Transverse yoke centre section of Model 126	unscrew, screw on. Renew self-locking bolts (step 36).
Drag link and steering damper on Model 107, 126, 201	unscrew, screw on (46–550) (step 37).

Rear engine support (480) without engine mount	remove, install (22-2120).
Engine shock absorber on model 107, 126	remove, install.
Front engine mounts, left and right	unbolt, bolt on from below (22-2110)
Guard plate at component compartment wall	insert, remove (step 43).
Engine with engine hoist	lift out (steps 38, 44).
Seal at heater feedpipe (engine suspension eye)	replace (25 Nm).
Front engine mounts	check.
Coolant, oil and fuel hoses	check.
If automatic transmission fitted	adjust Bowden cable for control pressure (27–100).
Idling speed	check and adjust.
Oil drain plugs	check tightening torque.
Oil level in engine and transmission	check (18-0020).
Coolant	pour in, check anti-corrosion/antifreeze agent (20–0100).
Fault memory	read, erase.
	Note After completing the work, faults stored in the fault memories must be processed (rectified cause) and erase. See Diagnosis Manual Volume 2: Index 0: connecting and using testers.
Model 129 with ADS: steering angle sensor	initialize, see Diagnosis Manual Chassis Volume 2
Engine	run and check for leaks.

Special tools

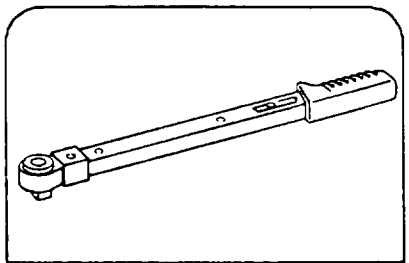

001 589 66 21 00

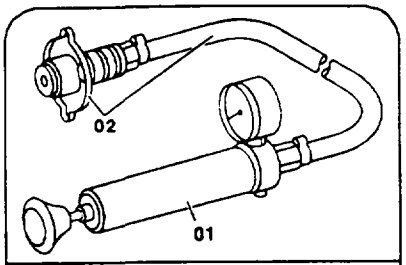

124 589 15 21 00

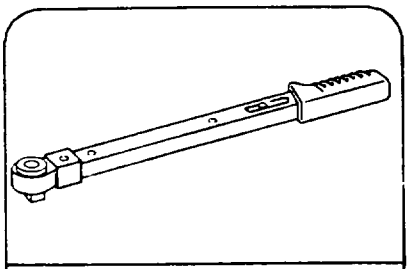

001 589 67 21 00

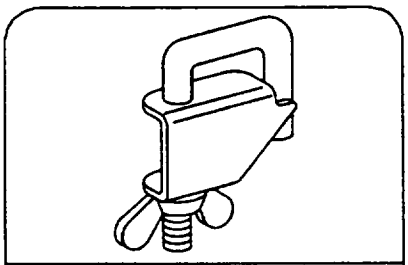

000 589 40 37 00

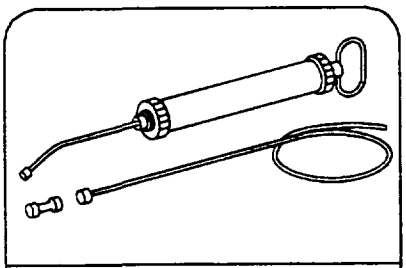

112 589 00 72 00

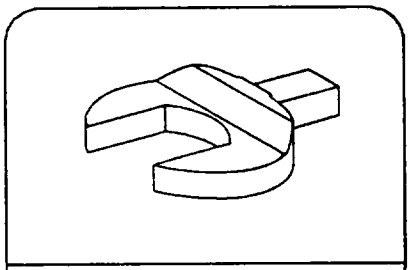

126 589 00 01 00

Commercially available tools and testers

Designation	eg. make, order no.
Engine hoist No. 3188 self-locking	eg. Wilhelm Bäcker Herder Str. 13 D–42853 Remscheid
Anti-corrosion/antifreeze tester Preston-VU-Check	eg. Philipp Gather D–40822 Mettmann 2

Shop-made tools

Guard plate for radiator/condensor	Dim. approx. 480 × 680 × 1
Metal panel for component compartment wall	Dim. approx. 320 × 380 × 1

Note
Remove and install engine with transmission.

⚠
In the case of engine damage affecting the pistons, valves etc., parts may get in up to just before the catalytic converter or pre-catalytic converter.
When exchanging the engine, it is essential to remove these parts otherwise they may be pulsed back into the cylinders as a result of gas vibrations in the exhaust system and again cause engine damage.
In addition, these parts may cause mechanical damage to the catalytic converter. In dealing with such engine damage, it is therefore essential to remove these foreign bodies in the exhaust system.
Damaged catalytic converters must be replaced.

1 Detach ground cable at battery.

2 If air conditioning fitted: attach guard plate to condensor of air conditioning system (arrow).

3 If air conditioning fitted: remove poly-V-belt (13–3420).

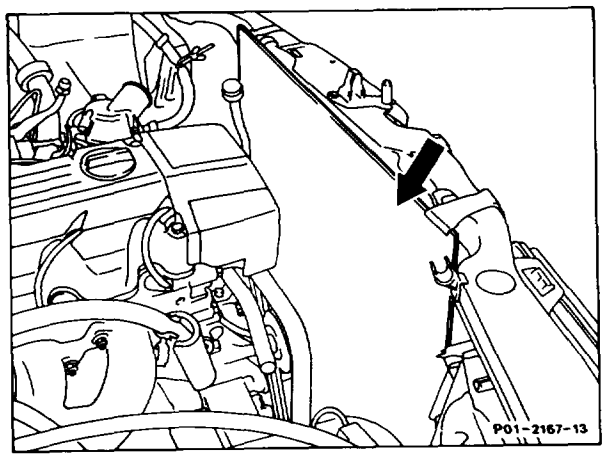

4 Detach refrigerant compressor of air conditioning system from crankcase. Unscrew bolts (424). Attach refrigerant compressor with pipe group connected to the side at the bottom of engine compartment. Unscrew hydraulic oil line at power steering pump and line bracket at front on cross member.

Installation instruction
Pay attention to tightening torque.

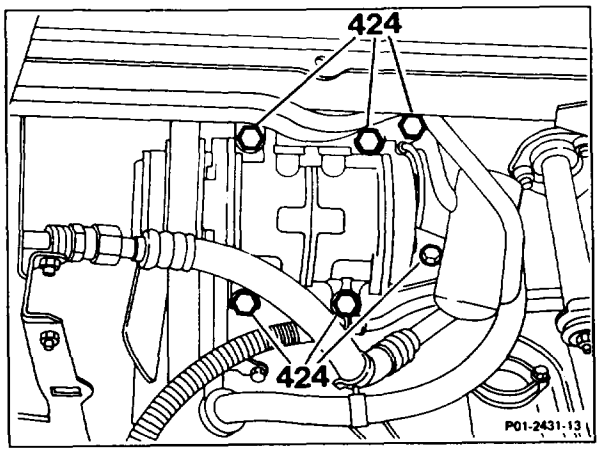

5 Slacken clip (arrow) and detach inlet hose of reservoir of self-levelling suspension at power steering pump and seal.

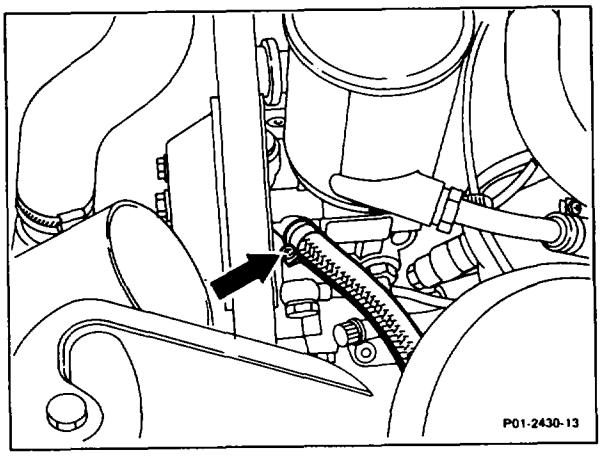

6 Extract oil from the reservoir of the power steering pump.

Installation instruction
Check oil level of power steering (46–7150).

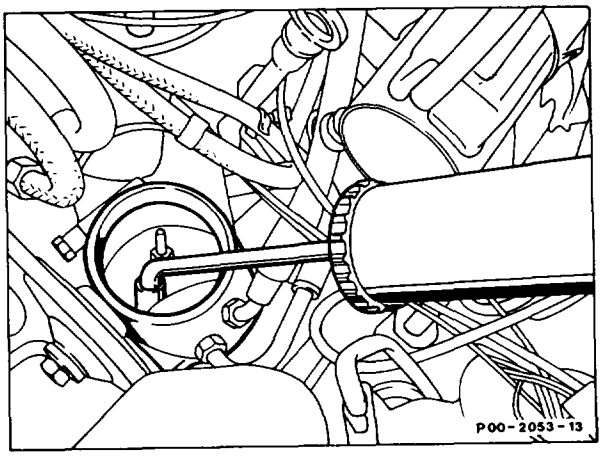

7 Unscrew high-pressure expansion hose (281), return line (529) to the steering gear and oil line (601) of the self-levelling suspension at the power steering pump.

Installation instruction
Renew seals.
Pay attention to tightening torque of high-pressure expansion hose (281) and return line (529).

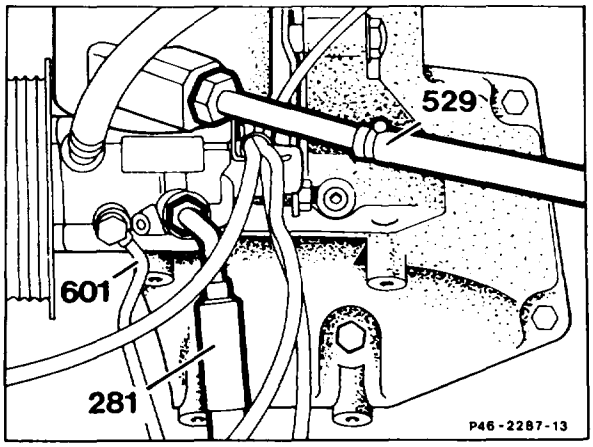

8 Briefly open the fuel filler cap to release the pressure in fuel tank. Unscrew fuel lines (379, 380). Hold the connection fitting (arrow) when slackening the fuel line (380).

Shown on model 124

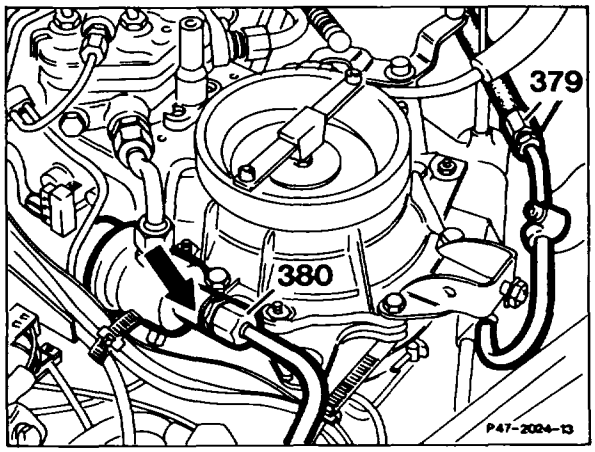

Model 129, 201
9 Detach Bowden cable of accelerator control. Press plastic guide (517) out of its seat in the fulcrum lever (390) and withdraw Bowden cable (403) through the slot in the fulcrum lever. Compress links of the plastic clip (518) and push clip with the Bowden cable (403) to the rear through the bracket.

Installation instruction
Adjust Bowden cable (30–3402).

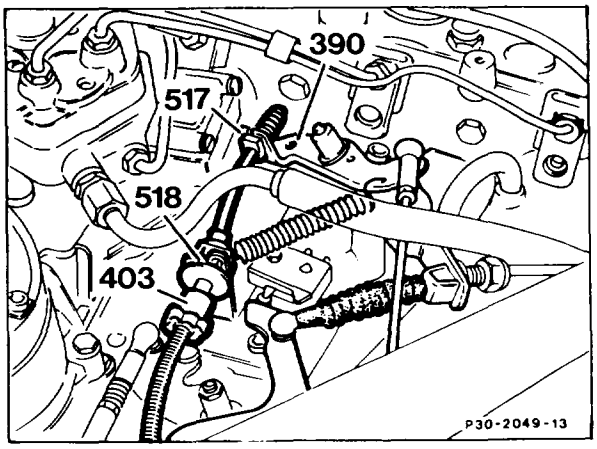

Model 107, 126

10 Press off accelerator control linkage (arrows), turn to the left and tie tight.

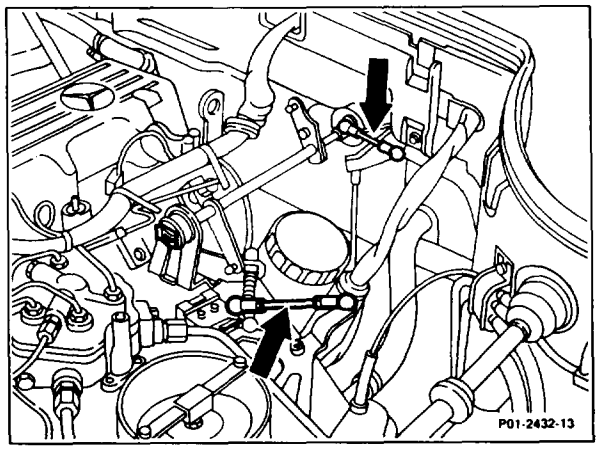

Shown on model 126

11 Take off clip at accelerator control linkage shaft (arrow) and withdraw the control linkage shaft from the mounting point and take out to the front.

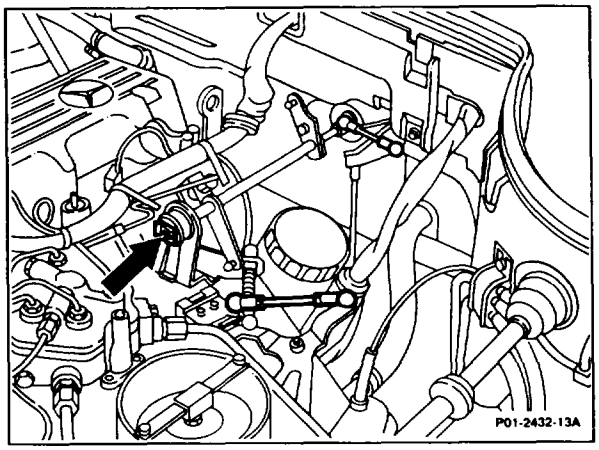

Shown on model 126

12 Unscrew electric lead. Turn down nut (531). Unscrew cross-head screw (530). Detach cable from oil level gauge and from the oil pressure sensor. Detach wiring harness from the rear suspension lug and withdraw upward.

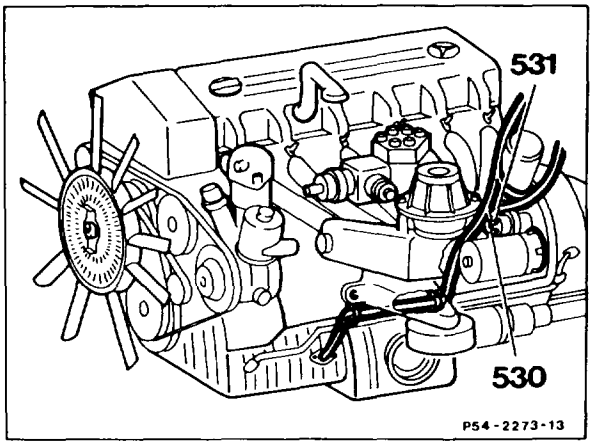

13 Detach heating hoses and vacuum lines in the engine compartment.

14 Slacken all the cable straps of the engine wiring harness. Detach all the plug connections along the engine wiring harness. Remove wiring harness.

15 Detach control line from position sensor and vacuum line at the connector-sensor ignition control unit (arrow).

16 Detach vacuum lines.

17 Detach extraction line of fuel evaporation control system from connection fitting on the left wheelhouse.

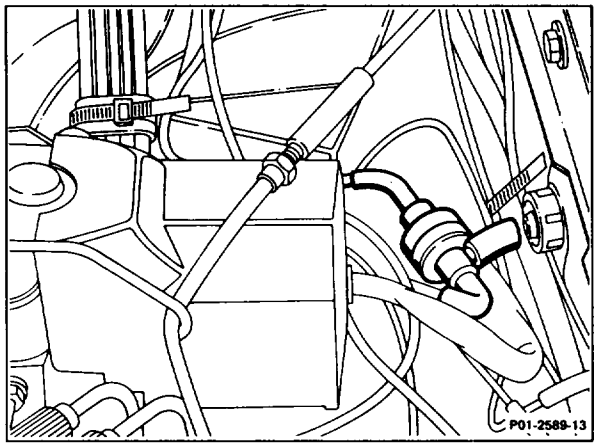

18 Detach control pressure line (arrow) at the left wheelhouse and place over the engine.

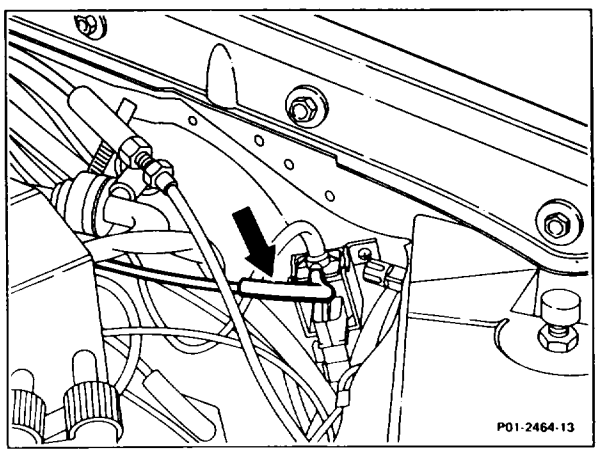

Model 129

19 Unscrew starter and place to the side (15–700).
Electric cables remain connected.

20 Detach terminal block terminal TD next to diagnostic socket (X11) (arrow), unscrew diagnostic socket, detach cable from TDC sensor on the rear of the diagnostic socket.

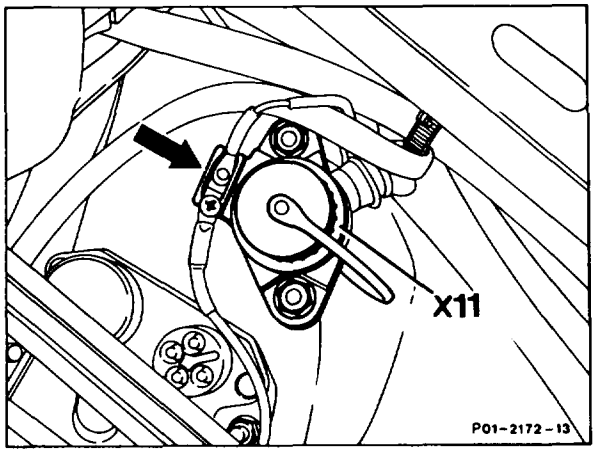

Model 107, 126, 129

21 Unplug connector (327) at the alternator.

Model 201

22 Unscrew alternator and take out oil line of self-levelling suspension.

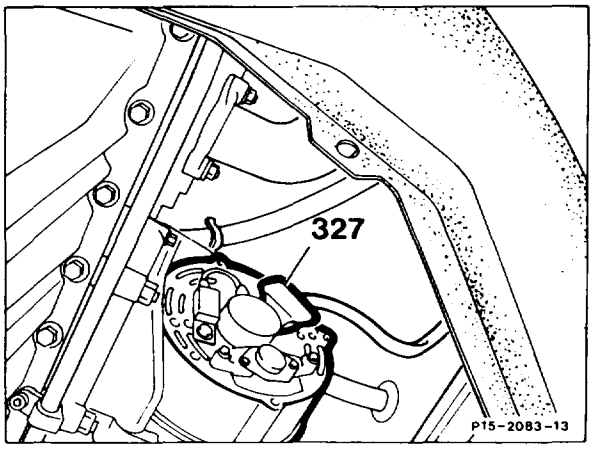

23 Remove rubber sealing strip (1) from the component compartment wall.

Model 129, 201

24 Remove covering of wiring harnesses by unscrewing four plastic screw fittings (arrows).

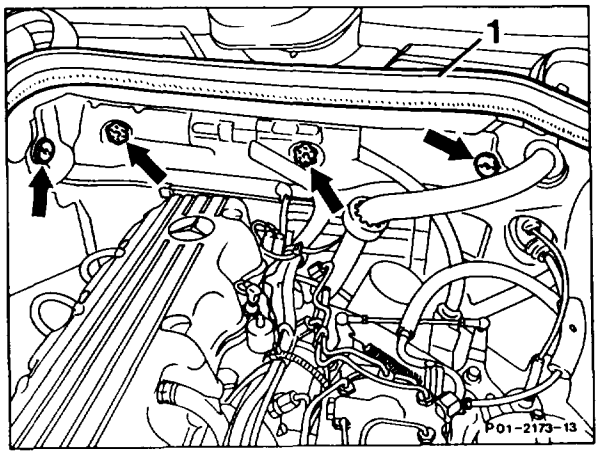

Model 126
Remove rubber sealing strip (1) from the component compartment wall and open the fixture (arrow) of the engine wiring harness, take out wiring harness upward and place to the side.

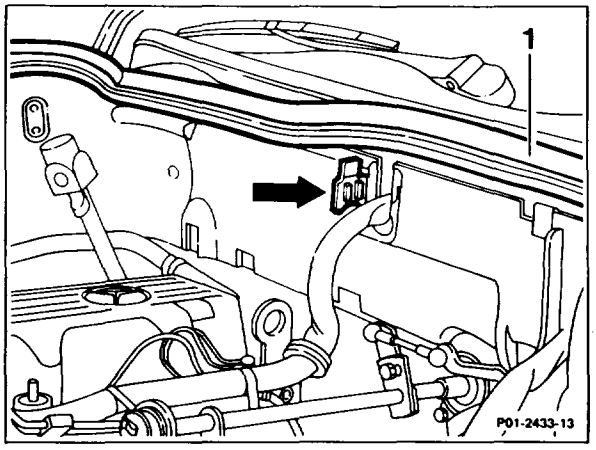

Model 129
25 If car fitted with air conditioning, unscrew cable holder at front on engine.

26 Pull off protective plate (455) and unscrew the lambda sensor (454).

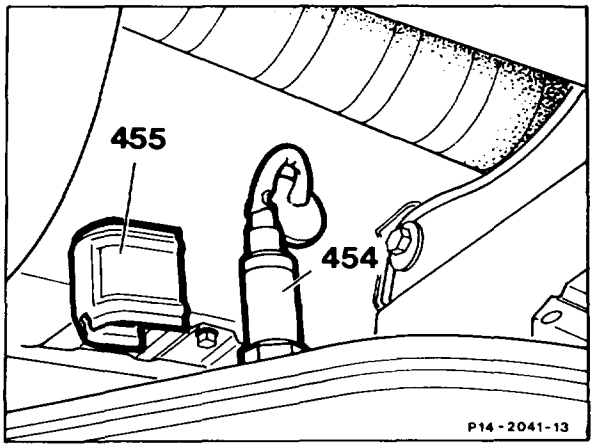

27 Remove exhaust system and shield above exhaust system (49–7000).

28 Detach propeller shaft. Unscrew nut (474), remove bolt (473). Flexible coupling (476) remains on transmission.

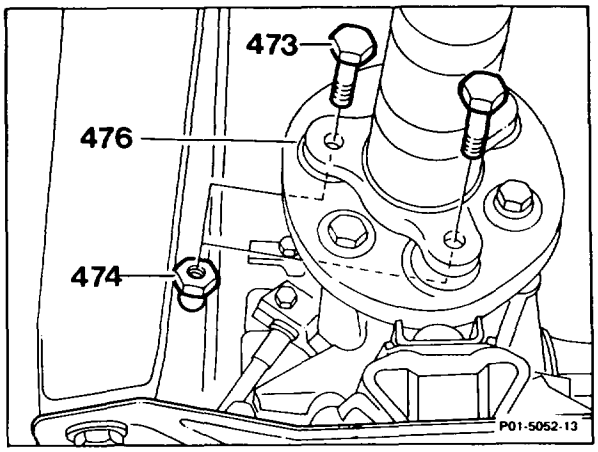

Installation instruction
Renew self-locking nuts.
Tightening torque 45 Nm.

29 Slacken bolts (494) for the propeller shaft intermediate bearing, but do not remove.

Installation instruction
Pay attention to tightening torque.

30 Slacken clamping nut (500) (waf 41/46) from the propeller shaft. Push back propeller shaft in direction of arrow as far as possible.

Installation instruction
Pay attention to tightening torque.

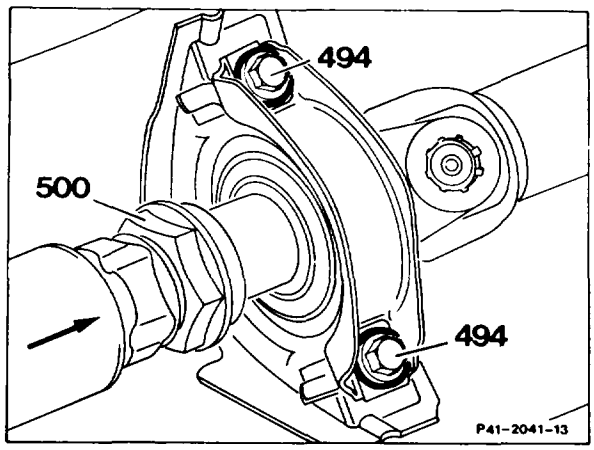

31 Unscrew cable for electronic speedometer (arrow) from transmission.

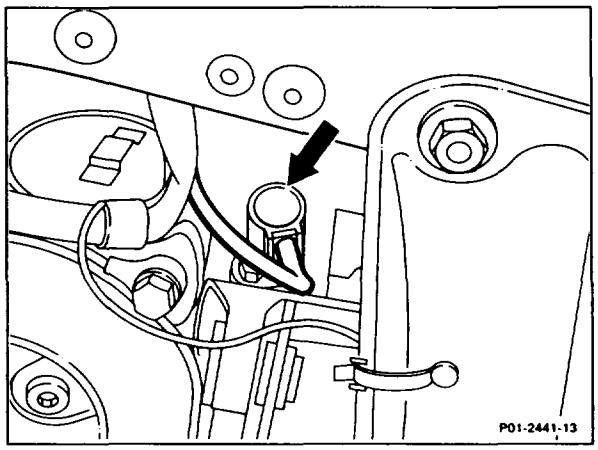

32 Unscrew ground cable (149) at transmission.

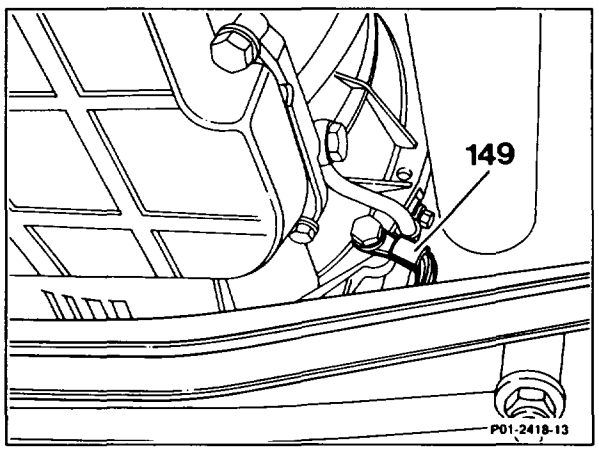

Model 129

33 If manual transmission fitted: disconnect hydraulic line (arrow) to the slave cylinder at the hose union. Seal lines with dummy plugs or extract fluid from the rear chamber of the combined reservoir.

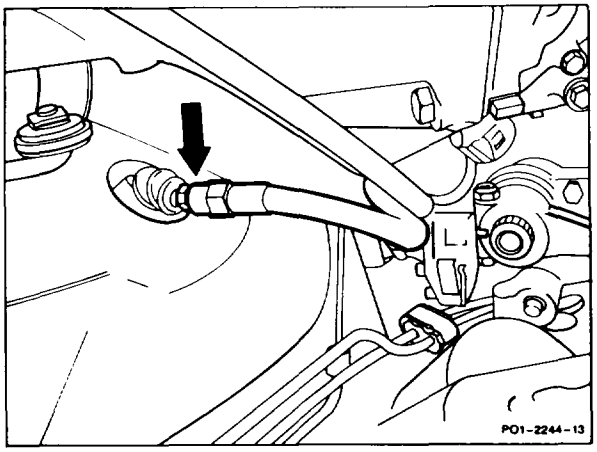

34 If manual transmission fitted: press clip locking elements off the transmission shift levers and then detach shift rods.

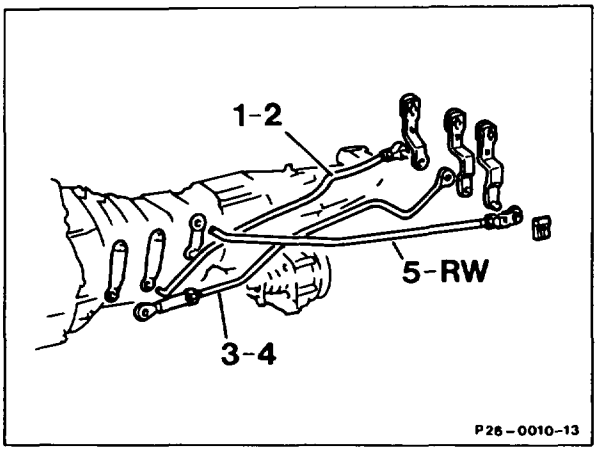

35 If automatic transmission fitted: detach shift rod (arrow) at the centre shift mechanism. Turn white plastic locking element on starter lockout, backup light switch (53) approx. 45° to the right and detach the cable connector.
Detach cable on the kickdown solenoid valve.

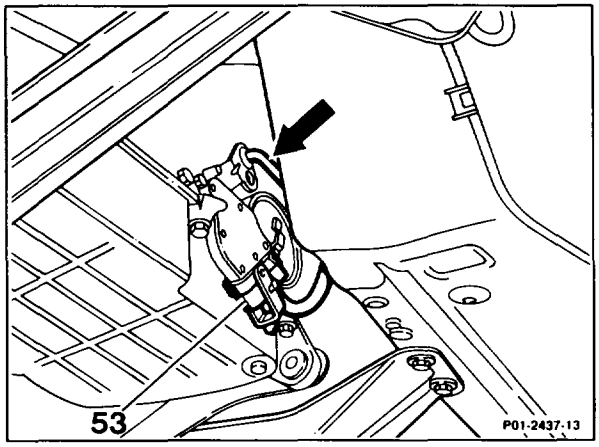

Model 126

36 Unscrew cross yoke centre piece (4) on the front axle.

Installation instruction

Renew self-locking bolts (22).
Pay attention to tightening torque.

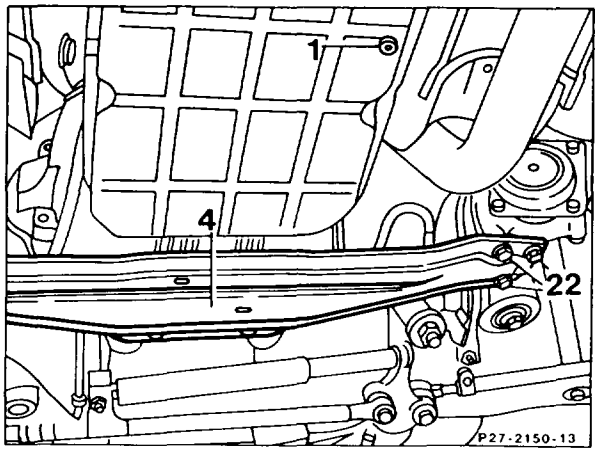

Model 107, 126, 201

37 Unscrew drag link on left and steering damper on right, detach and turn drag link to the rear right (46–550).

38 Attach engine hoist to the suspension lugs of the engine.
Adjust engine hoist so that the engine can be raised horizontally.

39 Support transmission with car jack or inspection pit lift.

40 Remove rear engine mount cross bar (22-2120).

Model 107, 126

41 Remove left and right engine shock absorbers.

42 Unscrew bolt at left and right front engine mount from below (22-2110).

43 Insert guard plate (arrow) between component compartment wall and engine.

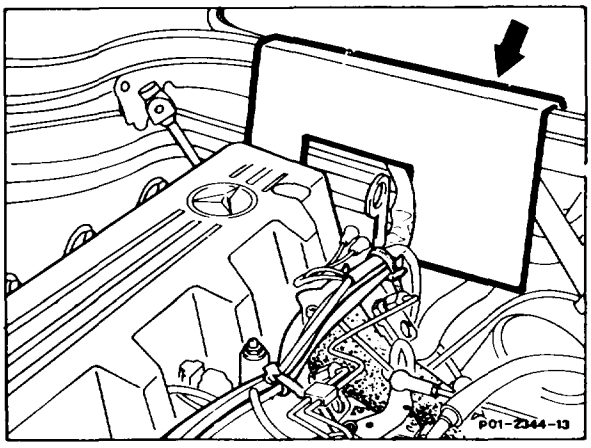

44 Tilt engine with transmission and lift out of the engine compartment, or install as appropriate, by repositioning engine hoist several times.

Note
When engine tilted, pay attention to the rear suspension lug and to the oil filter.

45 Check front and rear engine mounts.

46 Check coolant, oil and fuel hoses.

47 Install in the reverse order

48 If automatic transmission fitted, adjust Bowden cable for control pressure (27–1000).

49 Check idling speed, adjust. Read fault memories, erase.

Note
After completing the work, faults stored in the fault memories must be processed (rectified cause) and erase.

See Diagnosis Manual Volume 2:
Index 0: connecting and using testers.

50 Check tightening torque of oil drain plugs.

51 Check oil level in engine and transmission.

52 Pour in coolant, check anticorrosion-antifreeze agent (20–0100).

53 Run engine and check for leaks.

01–0400 Function description of crankcase ventilation

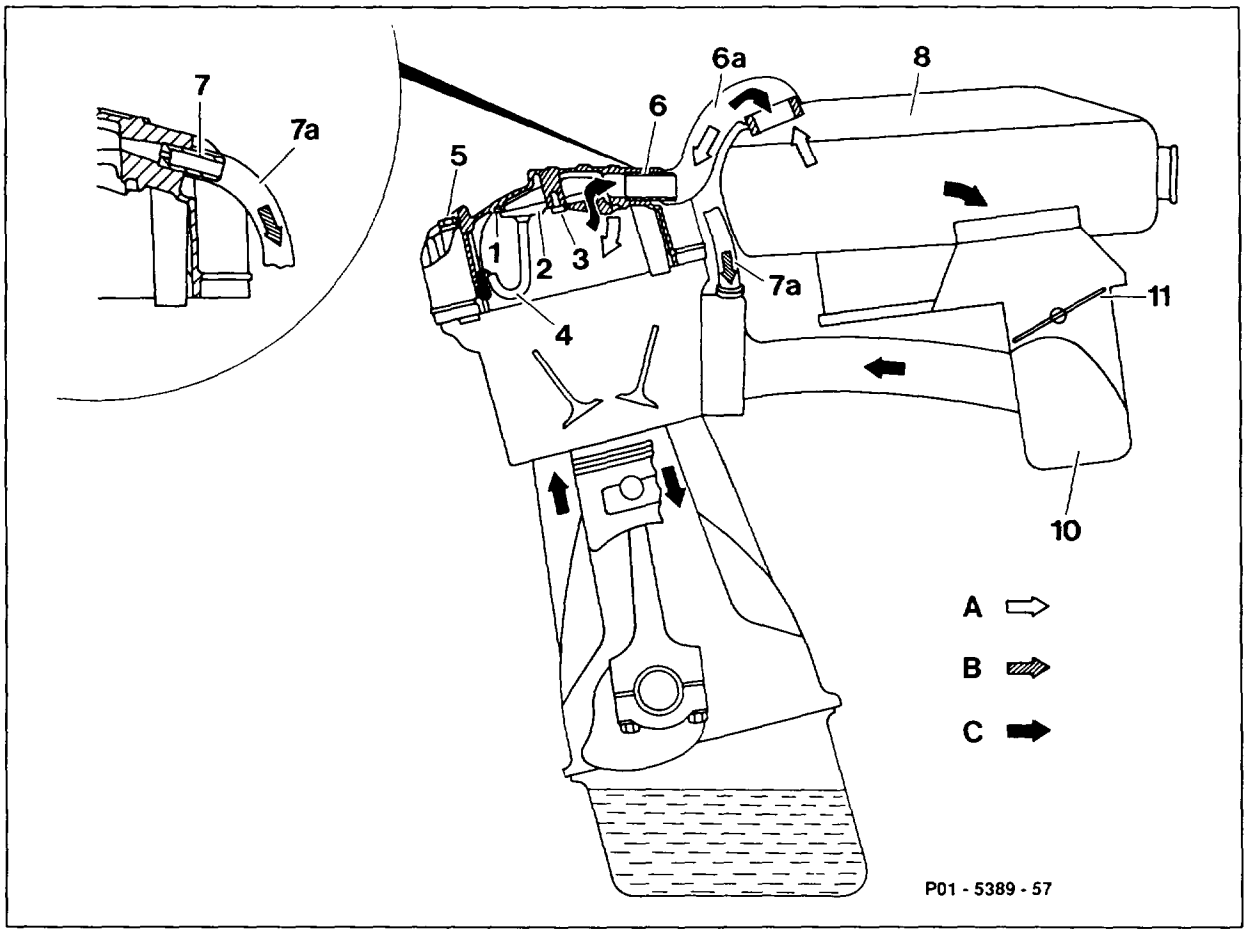

1	Profile seal	7a	Vent hose to intake manifold
2	Oil separating plate	8	Air cleaner
3	M5 × 8 cross-head screw	10	Intake manifold
4	Oil drain pipe	11	Throttle valve
5	M5 × 75 screw	A	Fresh air
6	Air cleaner hose connection	B	Part load blow-by gases
6a	Air admission or vent hose	C	Full load blow-by gases
7	Hose connection (bypass hole 2 mm dia.)		

Function description

The engine blow-by gases flow out of the crankcase through the oil separator (2) in the cylinder head cover.
The oil separated out at that point flows along a drain pipe (4) to the cylinder head.
The blow-by gases pass to the combustion chambers in the following manner depending on the load state of the engine (intake manifold vacuum).

Part load ventilation

Throttle valve (11) closed or slightly open:
The blow-by gases in part load are drawn off through the 2 mm dia. bypass hole in the hose connection (7) of the cylinder head cover along the vent hose (7a) into the intake manifold (10).
The vacuum which is produced in the crankcase as a result draws in fresh air from the air cleaner (8) along the air admission or vent hose (6a).

Full load ventilation

Throttle valve (11) open:
At full load all the blow-by gases are led through the oil separator (2) in the cylinder head cover and along the air admission or vent hose (6a) into the air cleaner (8) where they are mixed with intake air and drawn off through the throttle valve into the combustion chambers.

01–0500 Removing and installing cylinder head cover

Preceding work:
Warning instructions when hood open (01-0085).

Operation no. of operation texts and work units or standard texts and flat rates
01-5070

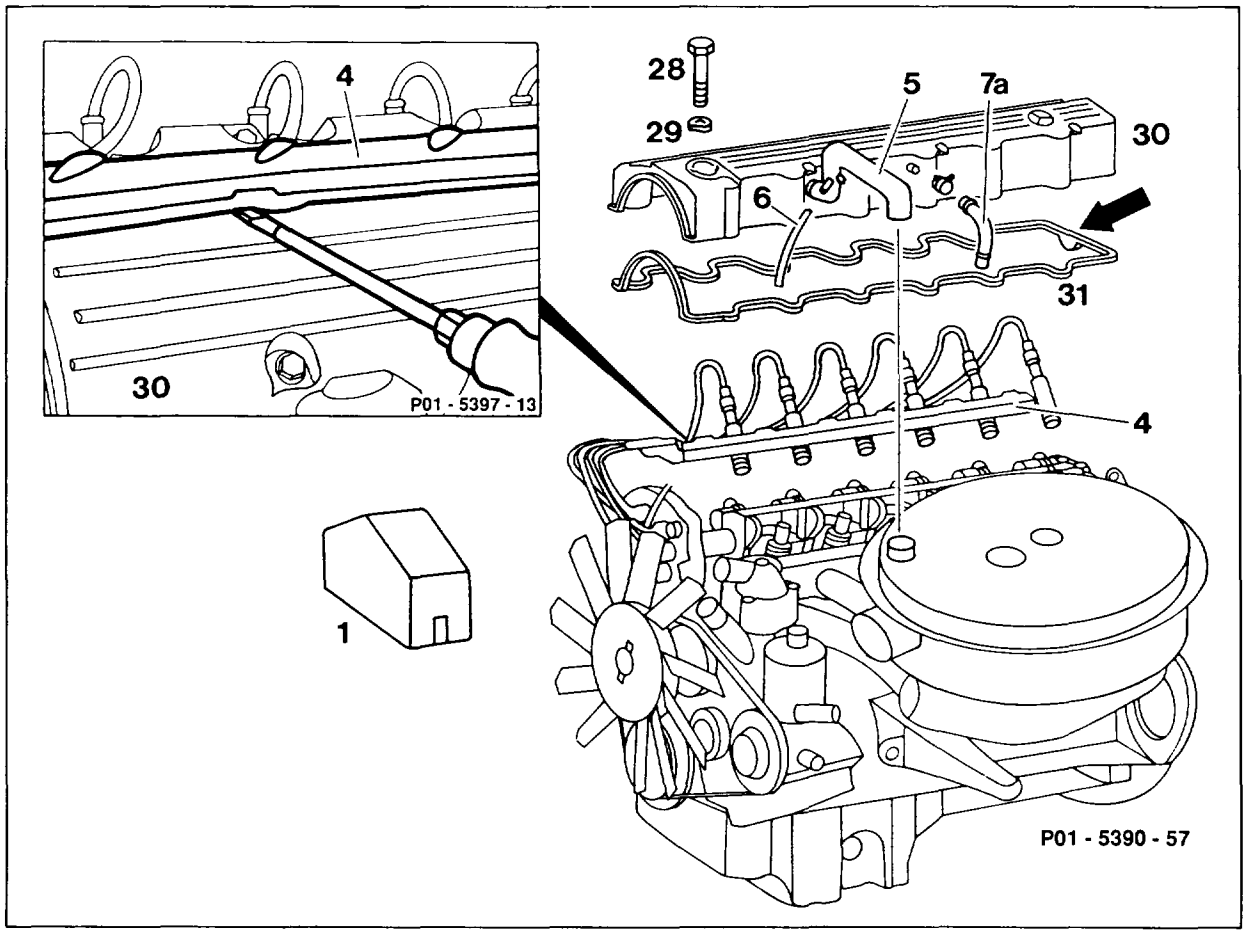

Cover (1) above high-voltage distributor	unclip, remove, install.
All spark plug connectors	unplug, plug in.
Shaft (4) with spark plug cable	unclip from cylinder head cover (30) with a screwdriver, place to the side, install.
Air admission or vent hose (5) with vacuum hose (6)	detach from air cleaner, fit on.
Vent hose (7a)	detach from cylinder head cover (30), fit on.

M8 × 75 screws (28) with washers (29)	unscrew, screw on (9 Nm).
Cylinder head cover (30) with gasket (31)	take off, fit on.
	⚠ If cylinder head cover (30) is tight, do not strike it with a hammer; risk of cracking and fracturing.
Gasket (31)	replace according to condition.
Engine	run, check for leaks particularly at rear (arrow).

Tightening torque in Nm

Screws of cylinder head cover	9

Special tool

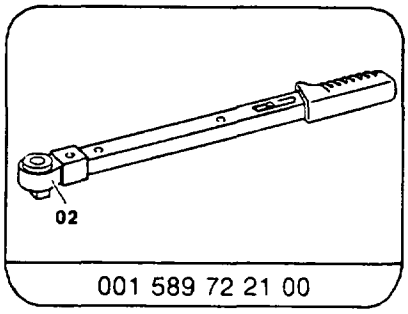

001 589 72 21 00

Note

The cylinder head gasket made of more heat-resistant material, installed as standard from November 1991 up to February 1992 and as of September 1992, should be installed when performing repairs.

Operation no. of operation texts and work units or standard texts and flat rates

Identification of model designations

Replacement crankcases and short blocks do not have a stamped engine model designation and engine number.

To enable the engine to be identified on vehicles (eg. by inspection authority after vehicle has been laid up or at Customs if vehicle exported etc.), the engine model designation must be stamped by the repairing workshop in the crankcase in the engine number panel (arrow), on the right in front of the engine support.

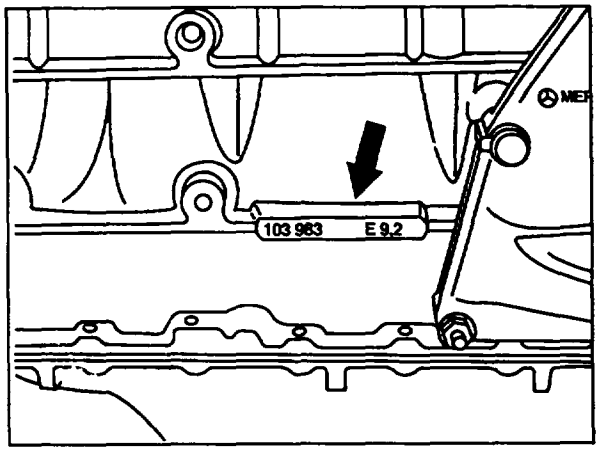

P01-6045-13

Example:
103.983 (engine model designation in model 124.030), see (01-0010).

The engine compression ratio (ε) has been stamped after the engine number since August 1987.

Since January 1991, crankcases with additional bearing seat openings at the side (1) have been fitted as standard. This improves the pressure distribution in the crank chamber.

Threaded holes in crankcase see (01-1200).

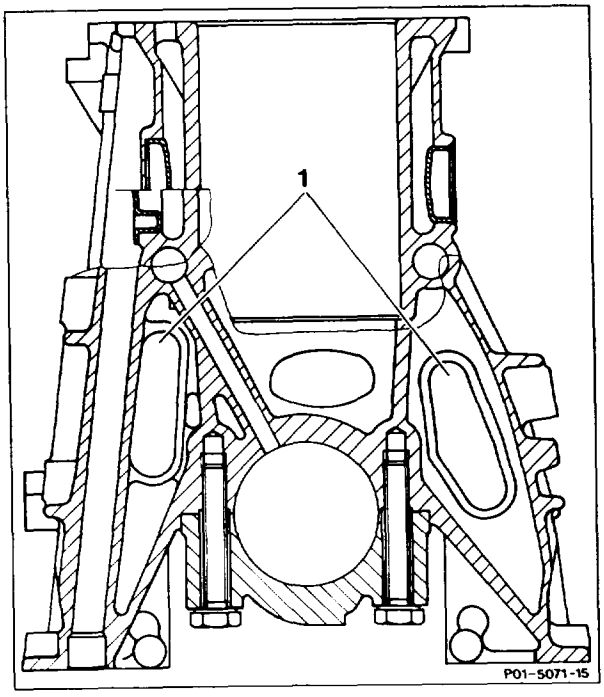

P01-5071-15

01–1100 Measuring, drilling and honing cylinder bores

Operation no. of operation texts and work units or standard texts and flat rates

Matching pistons – cylinders

Standard size / Engine	Gr. no. [1]	1st version		Gr. code letter [2]	2nd version	
		Piston dia.	Cylinder dia.		Piston dia.	Cylinder dia.
103.94 Ø 82.90 mm	0	82.868 82.882	82.898 82.908	A	82.873 82.879	82.900 82.906
	1	82.878 82.892	82.908 82.918	X	82.878 82.886	82.906 82.912
	2	82.888 82.902	82.918 82.928	B	82.885 82.891	82.912 82.918
103.98 Ø 88.50 mm	0	88.469 88.481	88.498 88.508	A	88.473 88.479	88.500 88.506
	1	88.479 88.491	88.508 88.518	X	88.478 88.486	88.506 88.512
	2	88.489 88.501	88.518 88.528	B	88.485 88.491	88.512 88.518

[1]) 1st version in group numbers (1, 2, 3).
[2]) 2nd version in group code letters (A, X, B).
[3]) Engine 103.983 AMG 3.2 standard size cylinder Ø 89.88 – 89.99 mm. Piston Ø 89.95 mm
The group numbers or group code letters are located on the piston crown and stamped in the contact surface of the crankcase.

Repair size I / Engine	Gr. no.	1st version		Gr. code letter	2nd version	
		Piston dia.	Cylinder dia.		Piston dia.	Cylinder dia.
103.94 Ø 83.40 mm	0	83.368 83.382	83.398 83.408	A	83.373 83.379	83.400 83.406
	1	83.378 83.392	83.408 83.418	X	83.378 83.386	83.406 83.412
	2	83.388 83.402	83.418 83.428	B	83.385 83.391	83.412 83.418
103.98 Ø 89.00 mm	0	88.969 88.981	88.998 89.008	A	88.973 88.979	89.000 89.006
	1	88.979 88.991	89.008 89.018	X	88.978 88.986	89.006 89.012
	2	88.989 89.001	89.018 89.028	B	88.985 88.991	89.012 89.018

Repair size II / Engine	Gr. no.	1st version		Gr. code letter	2nd version	
		Piston dia.	Cylinder dia.		Piston dia.	Cylinder dia.
103.94 Ø 83.90 mm	0	83.868 83.882	83.898 83.908	A	83.873 83.879	83.900 83.906
	1	83.878 83.892	83.908 83.918	X	83.878 83.886	83.906 83.912
	2	83.888 83.902	83.918 83.928	B	83.885 83.891	83.912 83.918
103.98 Ø 89.50 mm	0	89.469 89.481	89.498 89.508	A	89.473 89.479	89.500 89.506
	1	89.479 89.491	89.508 89.518	X	89.478 89.486	89.506 89.512
	2	89.489 89.501	89.518 89.528	B	89.485 89.491	89.512 89.518

Wear limit in direction of travel and in transverse direction		0.10
Permissible deviation of cylinder shape	when new	0.007
	wear limit	0.05
Permissible deviation from rectangularity related to cylinder height		0.05
Averaged peak-to-valley height (Rz) after final honing		0.002 – 0.004
Permissible wavyness (Wt)		50 % of roughness
Chamfer of cylinder bores		see note
Honing angle		50° ± 10°

Commercially available tool

Quick calipers for internal measurements, Ø 80 – 100 mm

Note

When performing repairs the cylinder bores should be made in accordance with the dimensions of the existing cylinders as stated in the table for matching pistons and cylinders. After final-honing, chamfer the cylinder bore as shown in the sketch (01-1200).

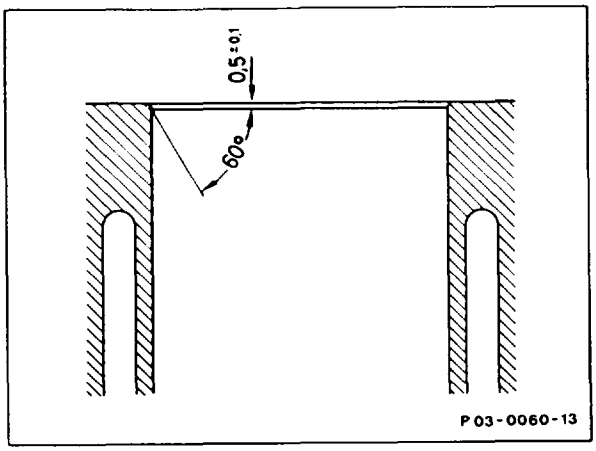

Measuring

Measure the cleaned cylinder bores with an internal measuring instrument at the 3 measuring points (1, 2 and 3) in the longitudinal and transverse direction.

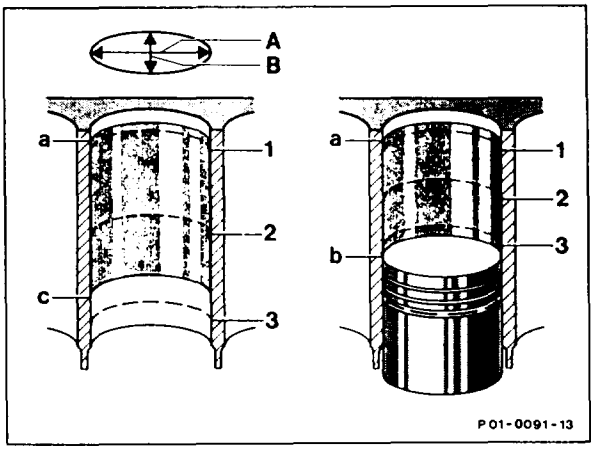

Measuring points 1 – 3
A Longitudinal direction
B Transverse direction
a Top reversal point of 1st piston ring
b Bottom dead center of piston
c Bottom reversal point of oil scraper ring

01–1200 Facing crankcase contact surface

Preceding work:
Engine disassembled

Operation no. of operation texts and work units or standard texts and flat rates

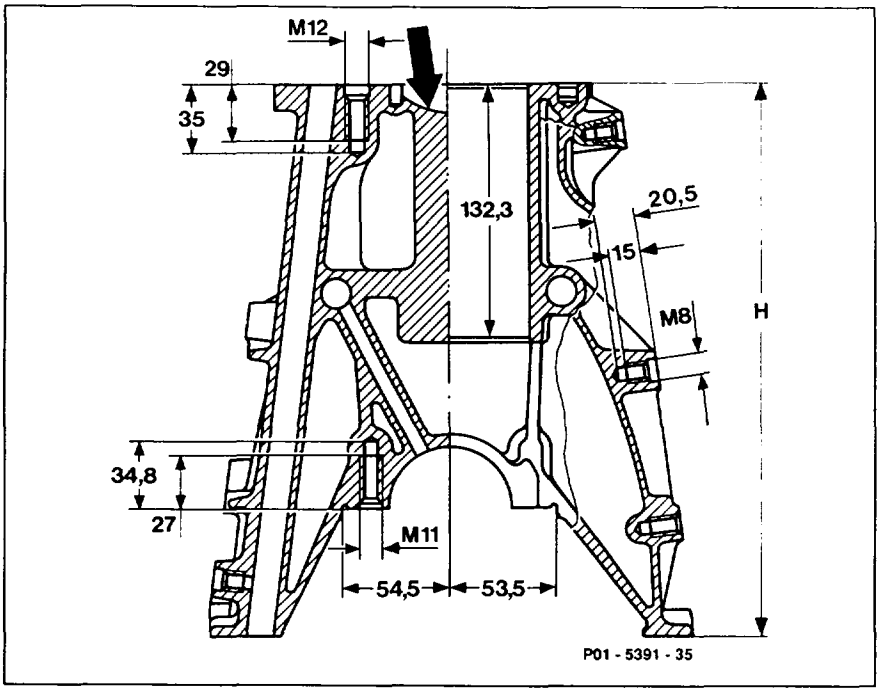

Crankcase engine 103.980

Data

Height "H" of crankcase when new		282.25 – 282.35
Minimum height after necessary stock removal [1]		281.95
Permissible unevenness	top crankcase contact surface	0.03
	bottom crankcase contact surface	0.04
Permissible deviation of parallelism of top to bottom crankcase contact surface in longitudinal direction		0.1
Peak-to-valley height (Rz)	top crankcase contact surface	0.005 – 0.020
	bottom crankcase contact surface	0.025
Test pressure with air under water in bar gauge		1.5
Chamfer of cylinder bores		see note

1) The stock removal at the crankcase and cylinder head of an engine must together be not more than 0.5 mm (see 01–4180).

Note
Face crankcase together with timing case cover.

After facing the cylinder bores, chamfer according to sketch.

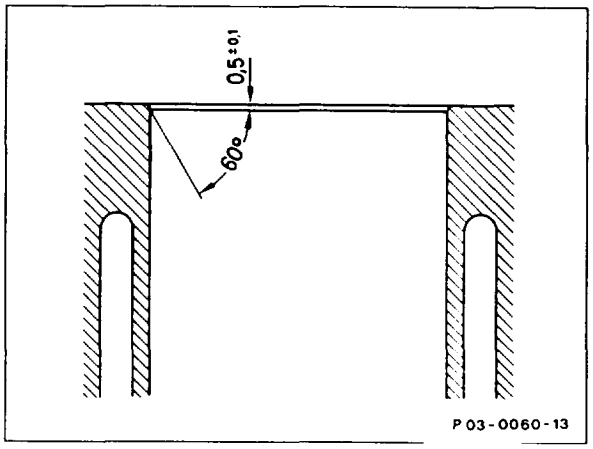

Chamfer cylinder bores with a suitable handmilling cutter as shown in the sketch. Smooth bottom edge of chamfer with polishing stone.

If the crankcase contact surface is remachined, the timing of the camshaft must be checked (05–2150) and the piston projection checked (03–3160).

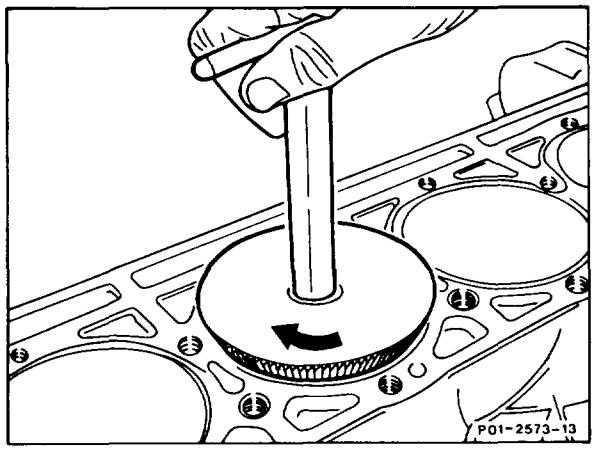

01–1220 Servicing threaded holes for cylinder head bolts

Preceding work:
Cylinder head removed (01-4150).

Operation no. of operation texts and work units or standard texts and flat rates

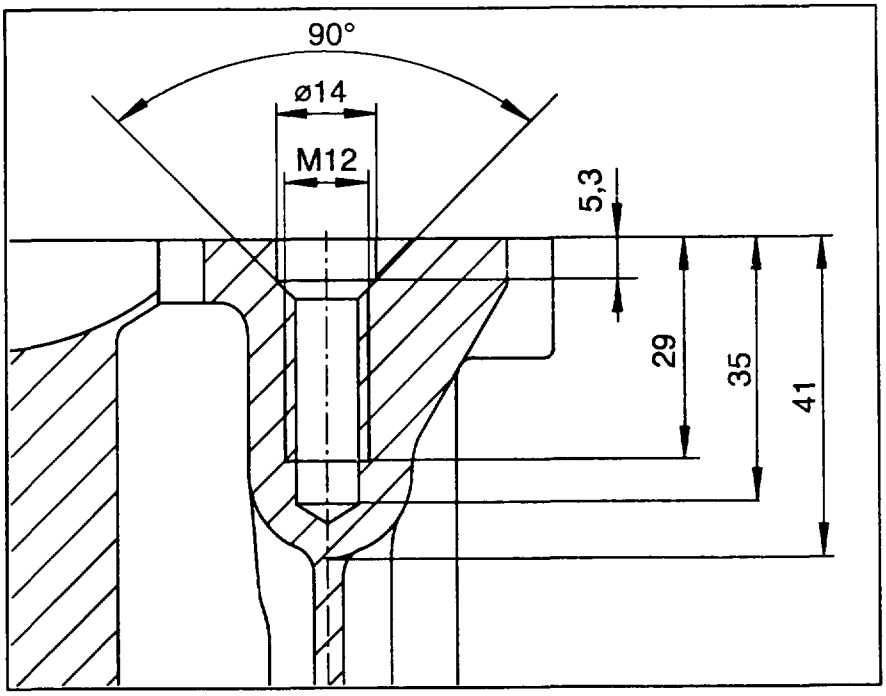

P01-6048-35

Bore	widen, pay attention to drilling depth of core plug
HELI-COIL thread	tap
HELI-COIL threaded insert	screw in

Data in mm

Twist drill ∅	12.5
Core plug depth from contact surface	35
HELI-COIL thread insert below contact surface	5.3
HELI-COIL thread length screwed in	26
HELI-COIL thread length block size	23.1

Commercially available tools

HELI-COIL hand thread tap M12 rough tap	eg.	Böllhoff GmbH Postfach 14 02 29 D–33622 Bielefeld Order no. 0140 0120 104
HELI-COIL hand thread tap M12 final tap	eg.	Böllhoff GmbH Postfach 14 02 29 D–33622 Bielefeld Order no. 0140 2120 102
HELI-COIL hand installation tool M12	eg.	Böllhoff GmbH Postfach 14 02 29 D–33622 Bielefeld Order no. 0150 0112 300
HELI-COIL threaded insert M12 × 1.75	eg.	Böllhoff GmbH Postfach 14 02 29 D–33622 Bielefeld Order no. 0130 0120 024

01-1300 Cleaning, sealing main oil galleries

Preceding work:
Engine disassembled

Operation no. of operation texts and work units or standard texts and flat rates

Cleaning

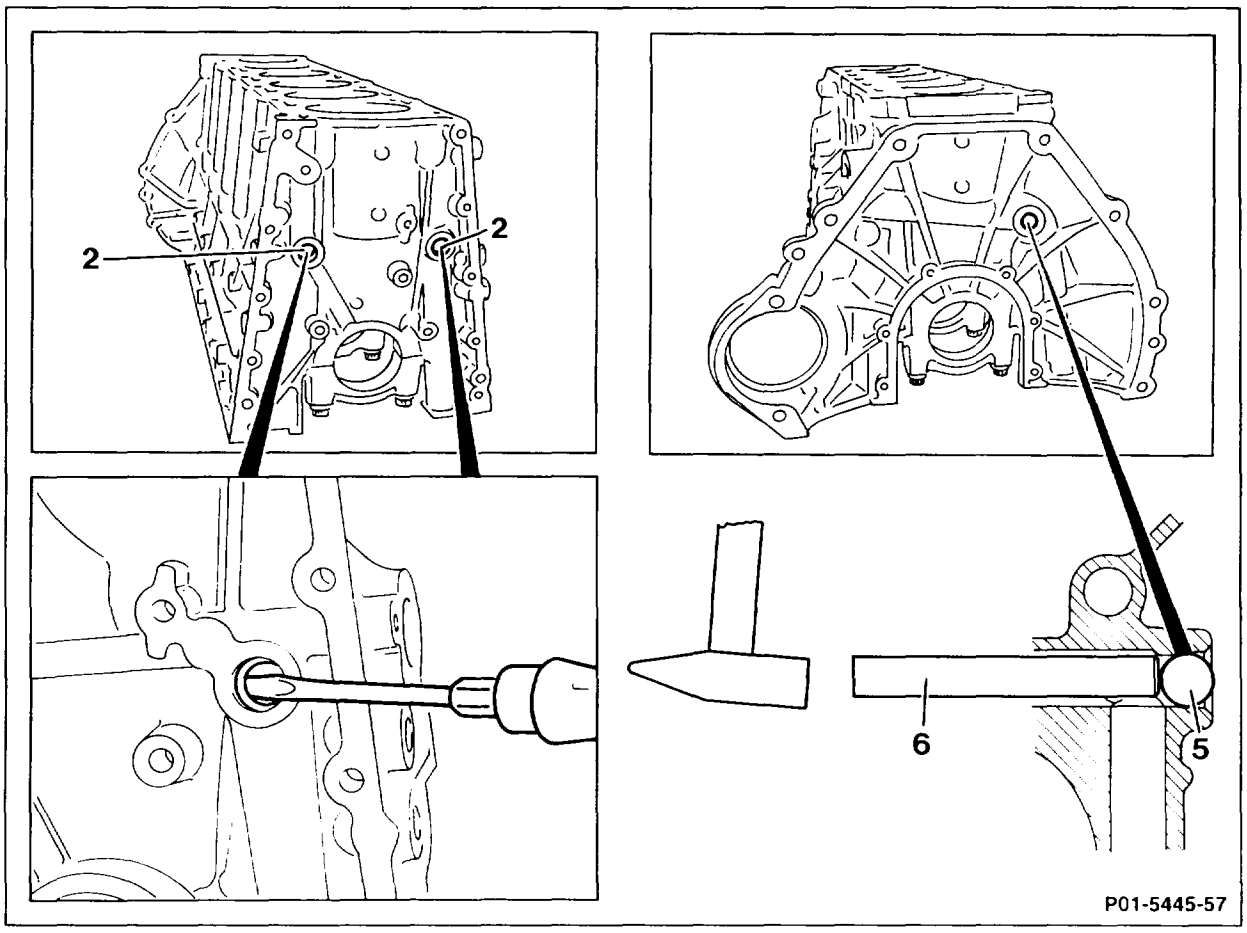

Plug (2)	strike with screwdriver at one side, press out.
Steel ball (5)	knock out from front side of engine with bar (6) (approx. 10 mm dia.; length 750 mm).
Oil galleries	clean.

Sealing

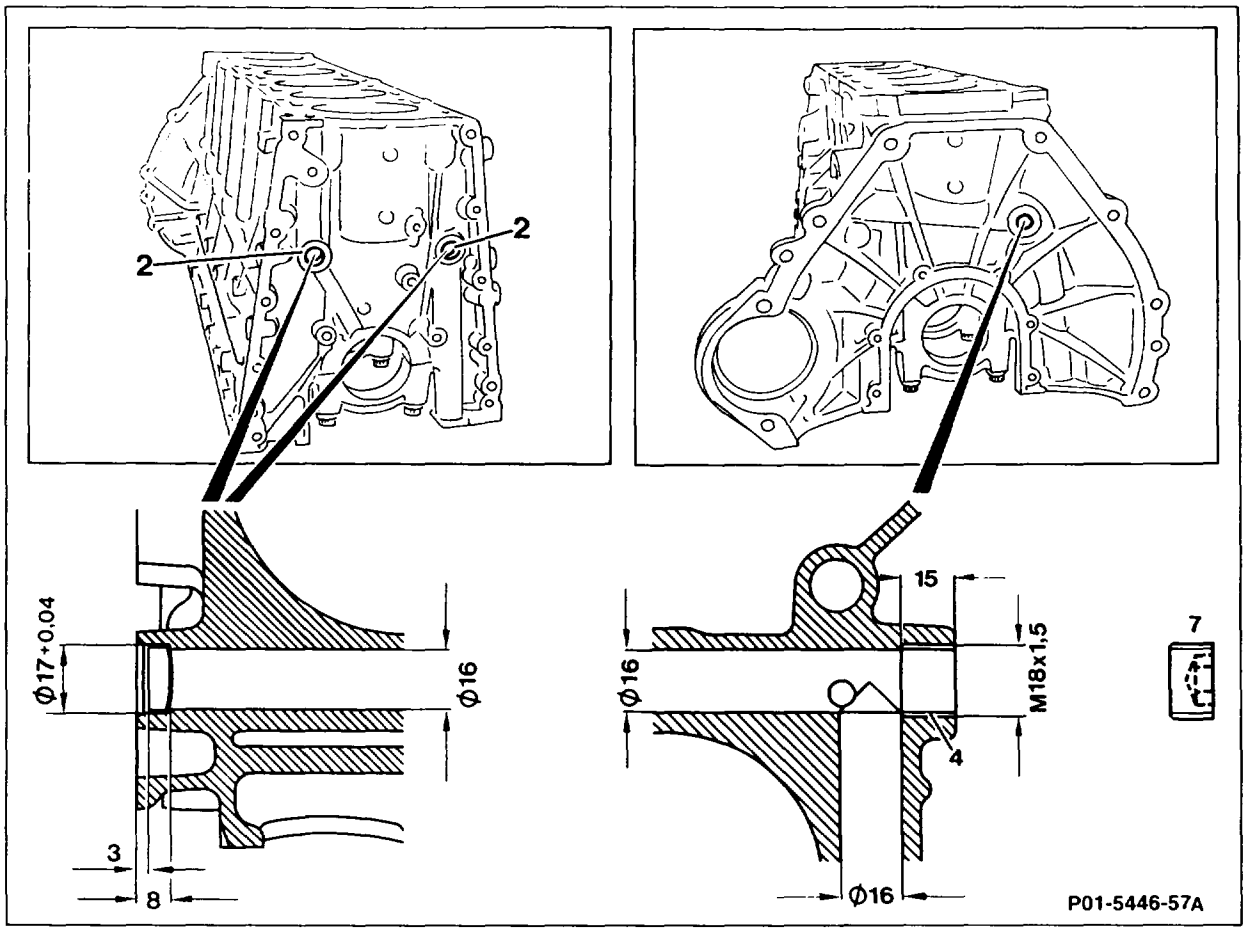

Main oil galleries	clean
New plug (2)	coat on circumference with Loctite 270 high-strength 002 989 93 71 10.
New plug (2)	knock in with insertion drift 102 589 12 15 00 as far as a stop on front side of engine.

A. Sealing end of main oil gallery with steel ball

Steel ball	knock in with insertion drift 102 589 07 15 00 2 mm deeper than originally so that the steel ball is provided with a new seat in the Ø 14.75 H11 bore. **Note** This method is only successful if no leak existed beforehand as a result of porosity in the crankcase oil gallery (ball seat). The steel ball must be free of damage and rust.

B. Sealing end of main oil gallery with screw plug

End of main oil gallery (4) at rear	widen (Ø 16 mm, depth about 15 mm).
Thread (M18×1.5)	tap into end of main oil gallery (4)
Swarf	thoroughly clean out of oil galleries
Thread and screw plug (7)	remove grease
M18×1.5 screw plug (7) DIN no. 000 906 018 00	coat with sealing adhesive 000 906 014 000, screw in, tighten.

Special tool

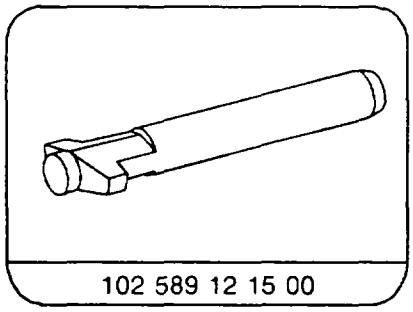

102 589 12 15 00

01-1400 Replacing core plug in crankcase

Preceding work:
Attachments in area of core plug removed.
Coolant drained (20-0100).

Operation no. of operation texts and work units or standard texts and flat rates
01-8501 - 01-8741

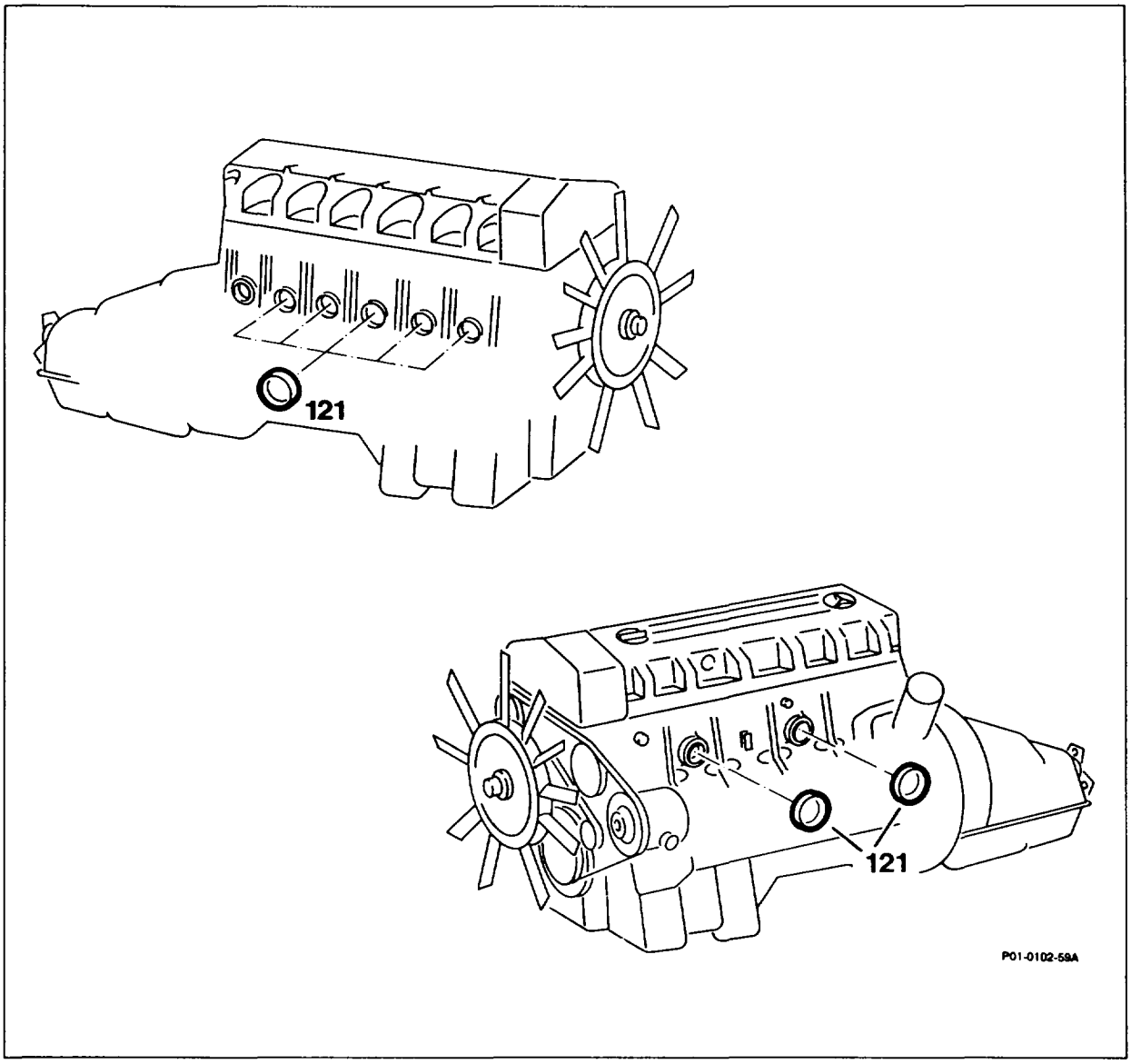

Core plug (121)	remove (steps 1 and 2).
Core plug hole with activator	clean, combination pack 002 989 09 71.
Core plug hole	coat with sealant 002 989 45 20 10
Core plug (121)	knock in with drift. Special tool 102 589 00 15 00.
Sealant	allow to cure.
Engine	check for signs of leaks.

Special tools

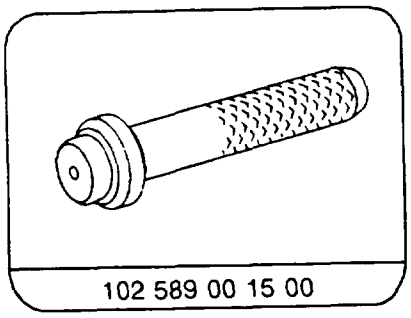

Renewal

1 Use a screwdriver to knock in core plug (121) on one side far enough for it to turn.

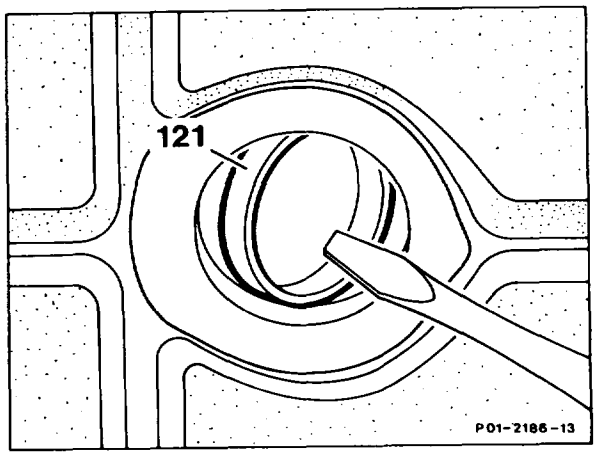

2 Withdraw core plug (121) by gripping at the collar.

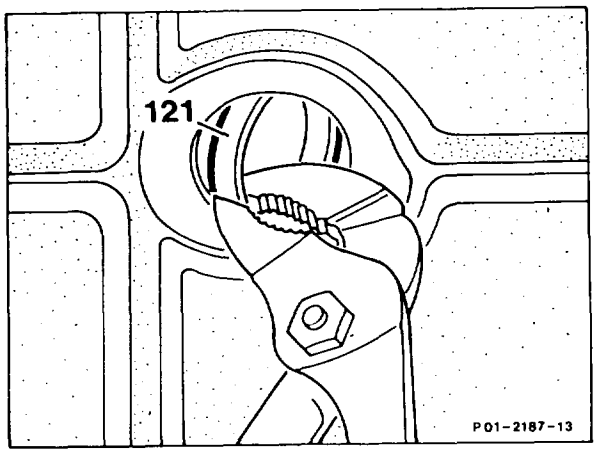

3 Thoroughly clean core plug hole. Spray the sealing surface with activator. It must be free of grease.

4 Coat core plug hole with sealant 002 989 45 20 10.

5 Knock in new core plug with the drift 102 589 00 15 00 until it is flush.

Note
The sealant must harden for approx. 45 minutes before pouring in coolant.

6 Run engine until it is warm and check for signs of leaks.

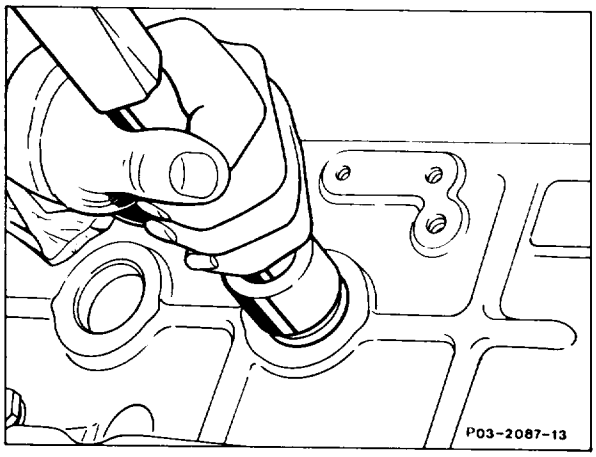

01–2100 Removing and installing timing case cover

Preceding work:
Bottom engine compartment panel removed (Maintenance Manual Volume 2, Op. no. 6190).
Radiator removed (20–4200).
Viscous fan clutch removed (20–3120).
Tensioning device removed (13-3450).
Front cover at top removed (01-2120).
Viscous fan coupling bearing bracket removed (20-3140).
Belt pulley/vibration damper and hub removed (03-3420).

Operation no. of operation texts and work units or standard texts and flat rates
01-8000 – 01-8009

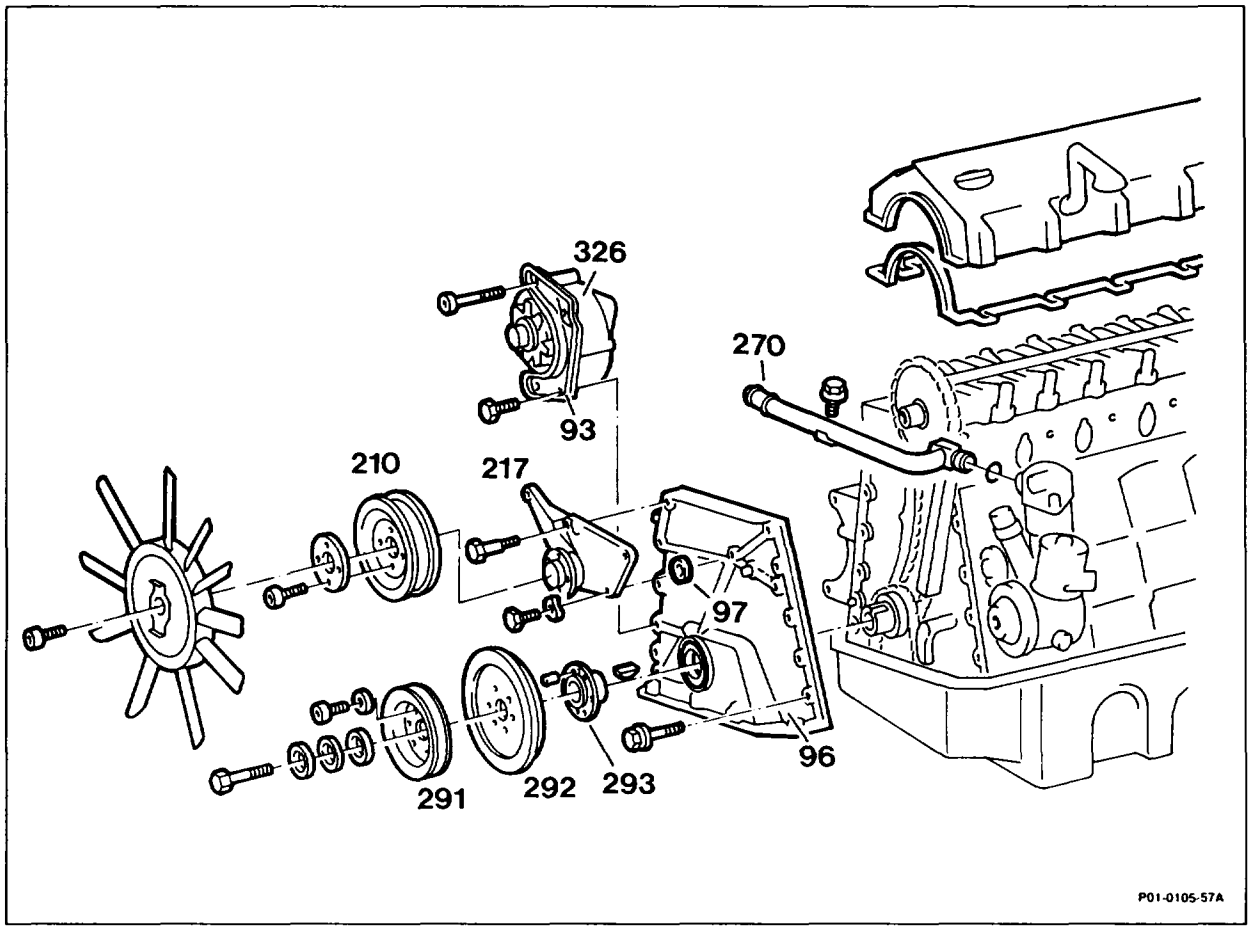

If car fitted with self-leveling suspension: pipe . . .	detach, attach (step 1)
Power steering pump	unbolt, bolt on (step 2)
Alternator (326) with bracket (93) and TDC sensor	remove, install (steps 3 to 5)
If air injection fitted: air pump with combination bracket	remove, install

Timing chain to camshaft sprocket	mark with colored marking (step 7)
Chain tensioner	remove, install (05–3100)
Timing case cover (96) at front and bottom	unbolt, bolt on. M6 bolts 10 Nm, M8 bolts 25 Nm (steps 9 and 10)
Timing case cover (96) with TDC sensor bracket	take off, seal with sealant 002 989 45 20 10 and fit on (step 10). **Note** On **4MATIC** models, additionally coat sealing surface on oil sump with sealant 001 989 61 20 10.
Seal (97)	replace (step 10)
Engine	check oil level
Engine	run and check for leaks

Tightening torques in Nm

Bolts of oil sump		10
Timing case cover to crankcase	M6	10
	M8	25

Modification of attachment of timing case cover to bottom of crankcase

To achieve standardization with the engine 104, three M8 × 60 bolts + washers are used (was M8 × 55); production breakpoint: 03/1989

Reinforcing on timing case cover

The timing case cover is provided with a reinforcing rib at the chain tensioner mount (arrow).

This avoids the chain tensioner jamming when installed; production breakpoint 02/1986.

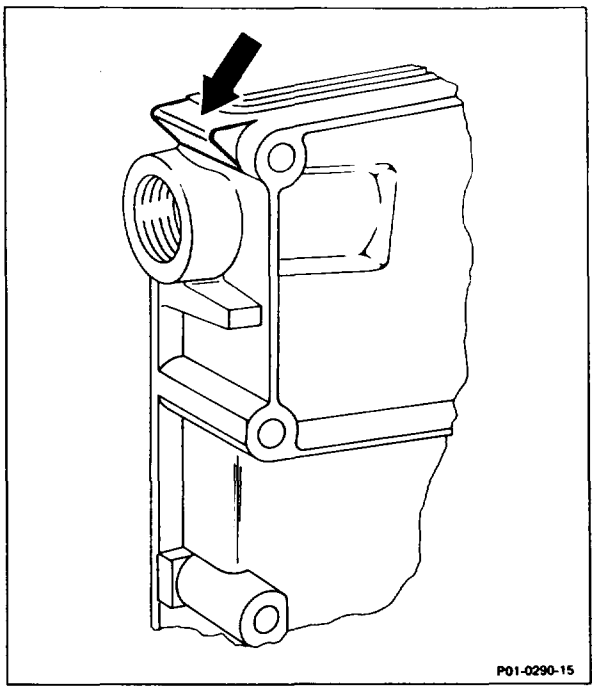

Removal, installation

1 On models with self-leveling suspension: detach clip (arrow). Pull off hose (275) and seal pipe (608).

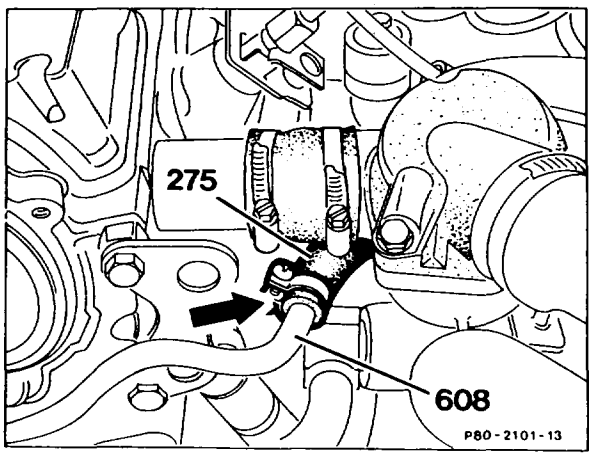

2 Unscrew bolts (277, 278) swivel power steering pump (280) in direction of arrow.

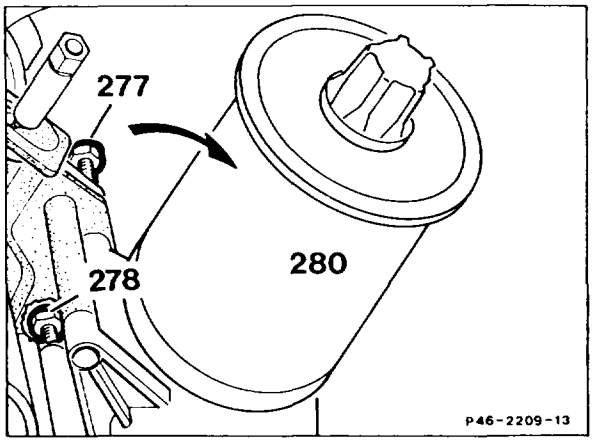

3 Unscrew nut (99). Take off TDC sensor (100) together with cable and place to the side.

Note
Bracket of TDC sensor (102) remains on timing case cover. If timing case cover is replaced, adjust TDC sensor (03–3450).

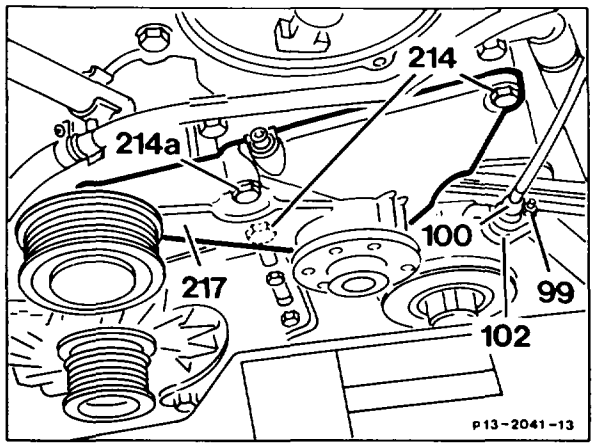

4 Unplug connector at alternator (326).

5 Unscrew bolts (91, 92). Remove bracket (93) and alternator (326).

6 If air injection fitted: unbolt air pump together with combination support.

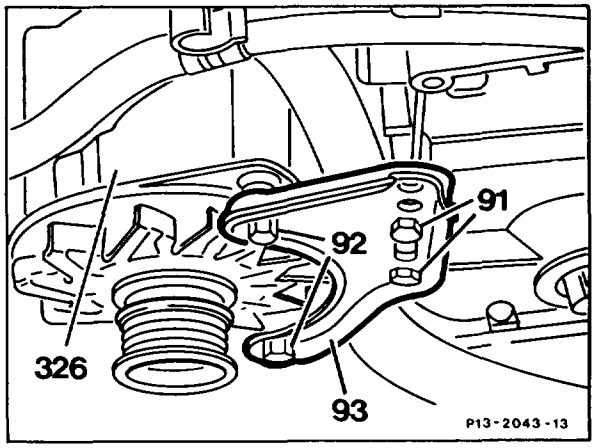

7 Mark timing case to camshaft sprocket with colored marking (arrows).

Installation note
Ensure that the colored markings on the camshaft sprocket and on the timing chain are positioned one above the other. Check basic position of camshaft (05–2150).

8 Remove chain tensioner (05–3100).

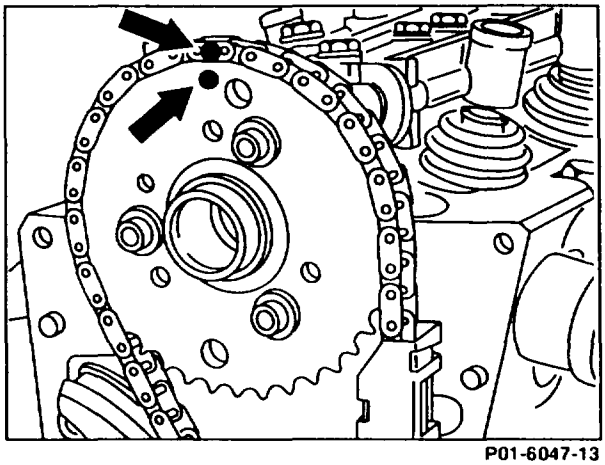

9 Unscrew bolts (138 and 139) at the oil sump. If model fitted with self-leveling suspension: place retaining clip together with high pressure hose to the side.

Tightening torque M6 bolts 10 Nm

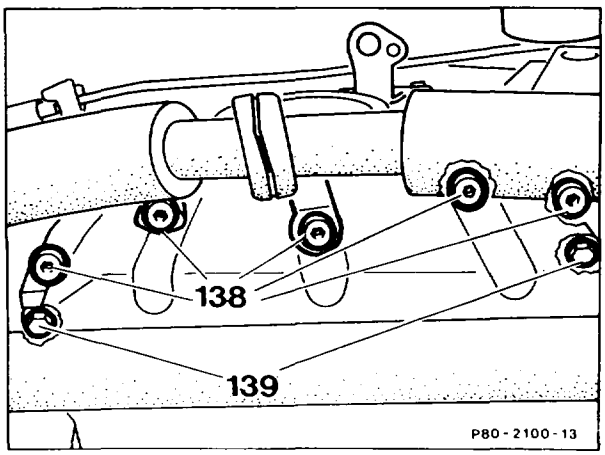

10 Unscrew bolts (95, 105) and remove timing case cover (96).
Tightening torques:
M8 bolts 21 Nm

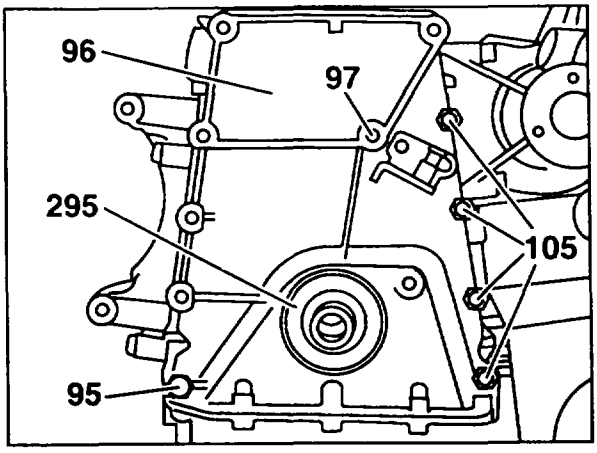

P01-6046-13

⚠
Do not damage gasket of oil sump!
If necessary, replace gasket of oil sump (01-3100).

Installation note
Examine radial seal (295); replace, if necessary (03–3240).
Clean crankcase and timing case cover. Apply a uniform coating of sealant 002 989 45 20 10 to teh sealing surface of timing case cover.
On **4MATIC** models: additionally clean the sealing surfaces of the oil sump and coat with sealant 001 989 61 20 10.
Replace seal (97).
The timing case cover is positioned by two tensioning sleeves on the crankcase.

11 Install in the reverse order.

12 Check oil level in engine, adjust to correct level if necessary.

13 Run engine and check for leaks.

01–2120 Removing and installing front cover at top

Preceding work:
Model 201: fan shroud removed (20-3400).
Cylinder head cover removed (01-0500).
Driver at camshaft removed (05-2170).
High voltage distributor removed (05-2170).

Operation no. of operation texts and work units or standard texts and flat rates
01–5700

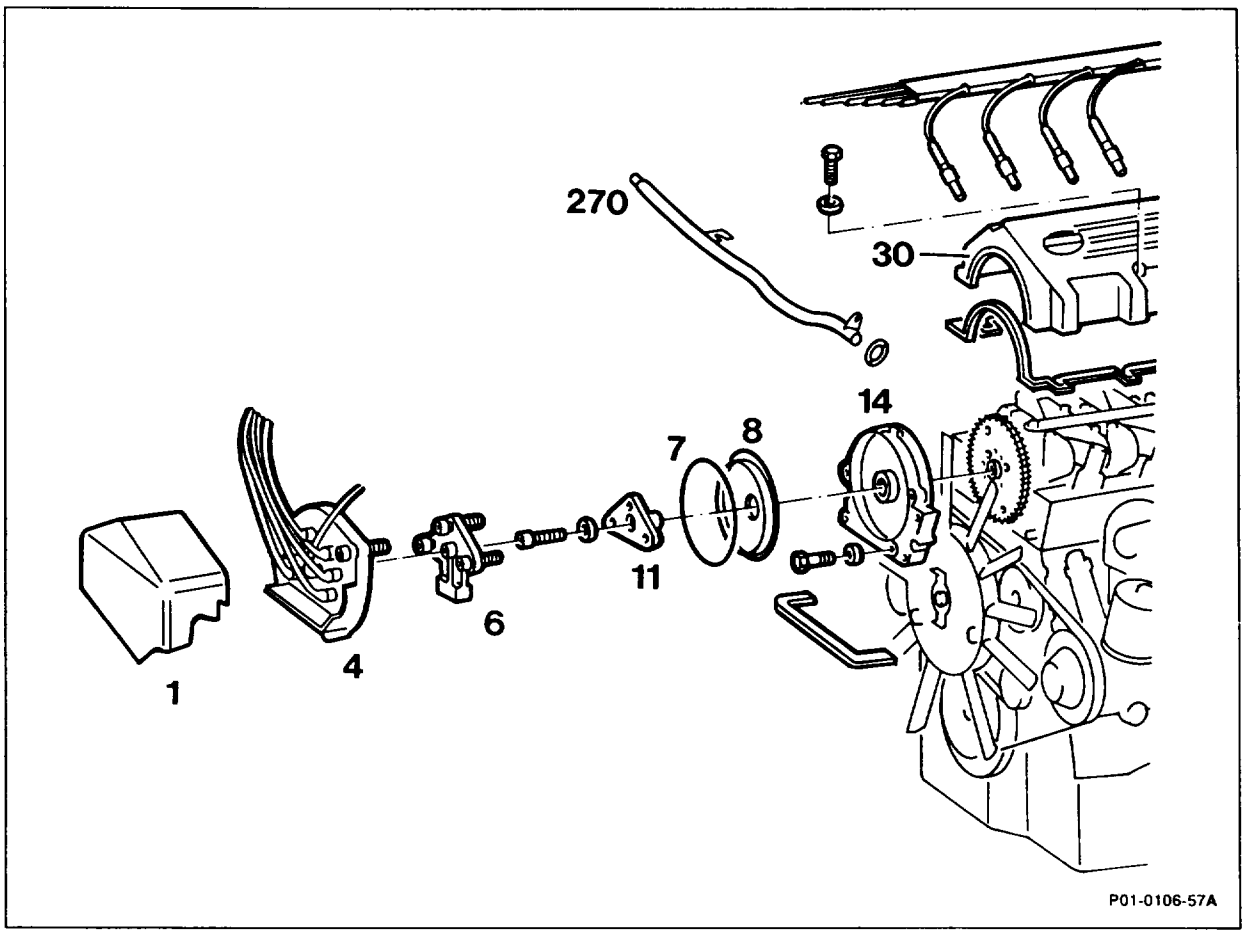

Cap of expansion tank	open, release pressure (step 1)
Heating return pipe (270)	remove, install. Replace seal (step 2)
Front cover at top (14)	remove, coat with sealant 002 989 45 20 10. Replace gasket (steps 3 to 6)

Front cover at top (14)	fit onto camshaft with insertion sleeve 103 589 00 14 00 or 103 589 01 14 00 and tighten bolts to 21 Nm (steps 7 to 8). **Note** Examine seal in cover, replace if necessary.
Installation	in the reverse order
Coolant	top up if necessary

Tightening torque in Nm

Front cover at top to cylinder head	21

Special tools

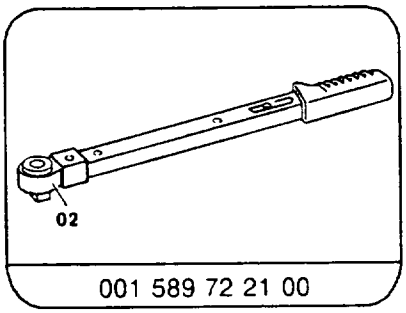

001 589 72 21 00

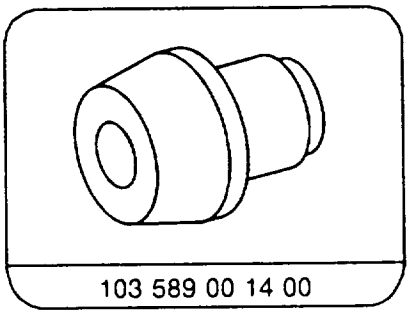
103 589 00 14 00

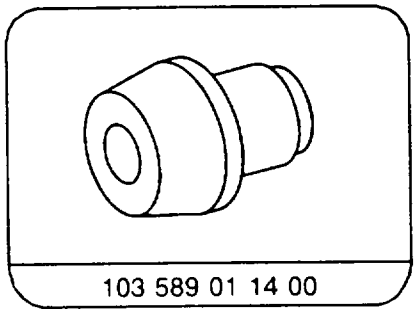
103 589 01 14 00

Modified gasket between front cover and timing case cover

A gasket with waver pattern is used.
This achieves improved sealing at the joint to the cylinder head.
Production breakpoint: 04/88

1 Open cap of expansion tank and release pressure.

2 Remove heating water return pipe (3).

Installation note
Replace seal.

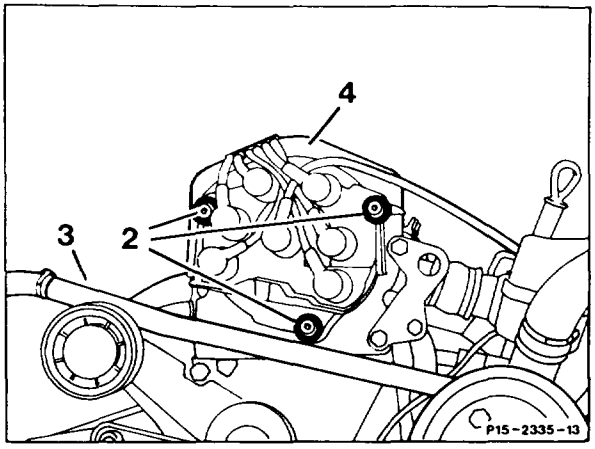

3 Unbolt front cover (14) and carefully knock off with a plastic-headed hammer, take off.

Note
Examine radial seal (14a) in the front cover and replace if necessary (01-2140).

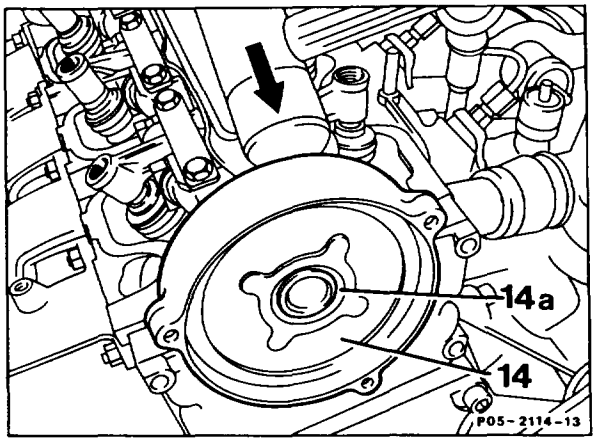

4 To seal, apply dots of sealant 002 989 45 20 10 (arrows) into the oil-free groove of the timing case cover on the left and right (at joint to cylinder head).

5 Insert new gasket (15) dry (without sealant) into the groove and push to the back.

6 Coat the contact surfaces of the front cover to the cylinder head with sealant 001 989 45 20 10.

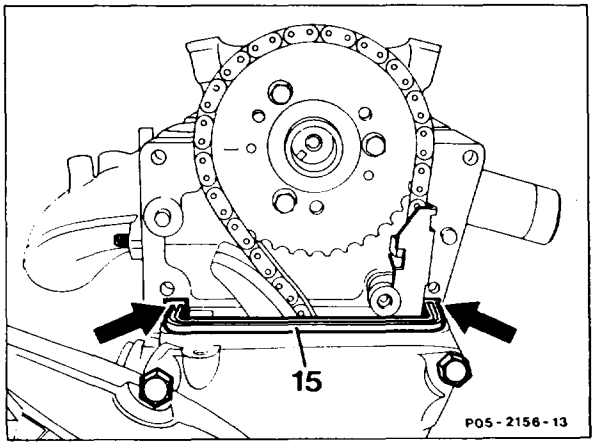

7 Fit insertion sleeve (arrow) 103 589 00 14 00 (for camshaft inner Ø 21.6 mm), or 103 589 01 14 (Ø 20 mm) onto the camshaft. Coat the sealing lip of the radial seal (14a) with engine oil. Fit on front cover (14).

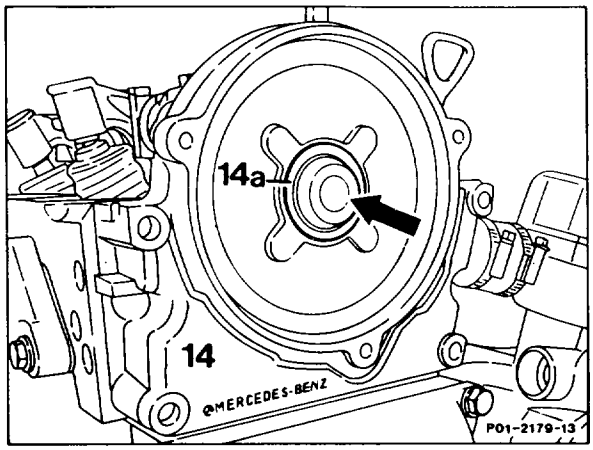

Note
The front cover is centered with two dowel pins.

8 Tighten the two bottom bolts first, tightening torque 21 Nm.

Installation is performed in reverse order.

9 Top up coolant, if necessary.

01–2140 Replacing radial seal in front cover

Preceding work:
Warning instructions when hood open (01-0085).
Models 124, 201: fan shroud removed (20-3400).
Driver on camshaft removed (05-2170).

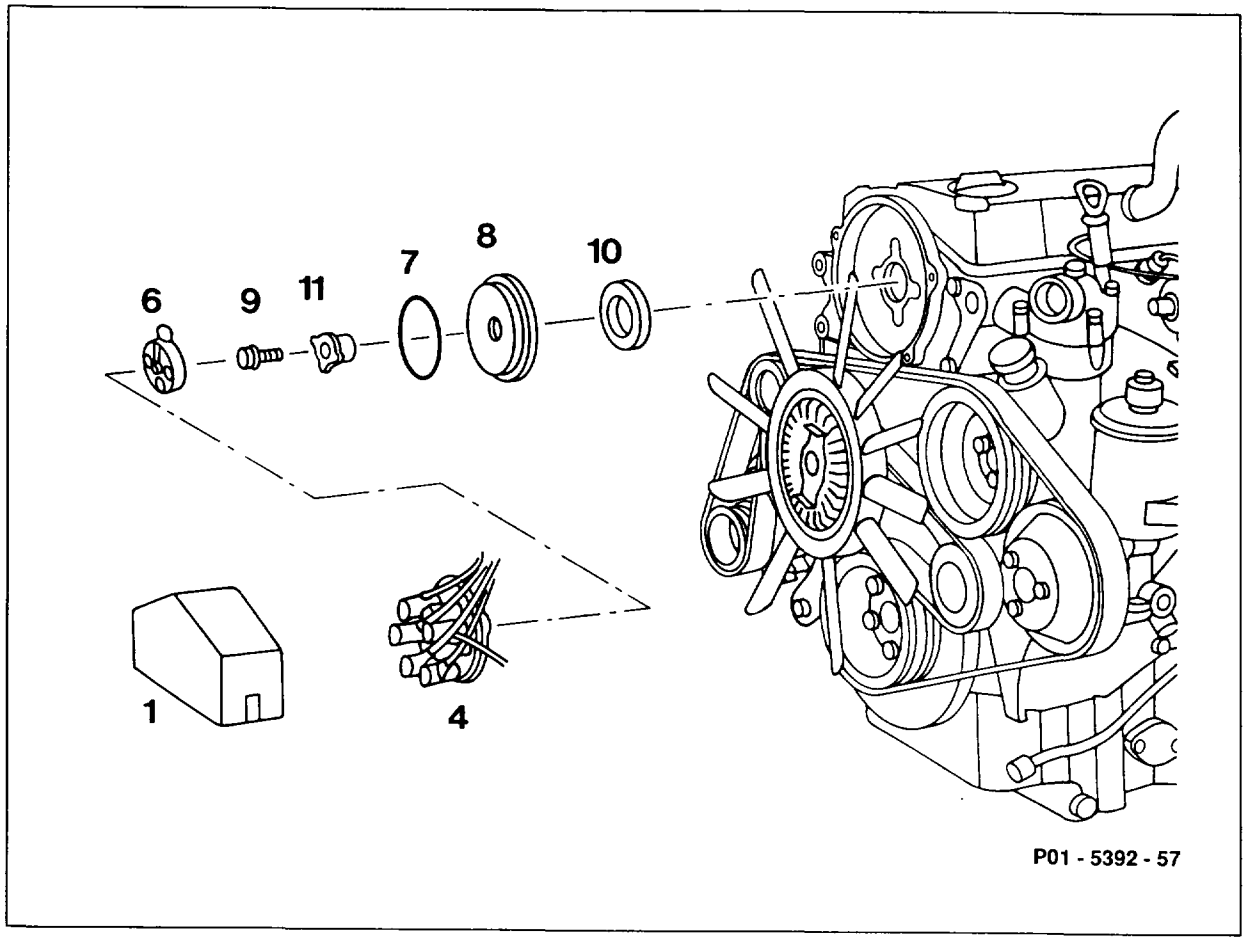

Radial seal (10) . . . . . remove, install (steps 1 to 4)

Special tools

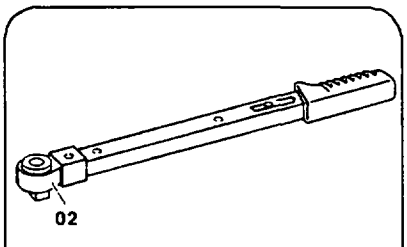

001 589 72 21 00

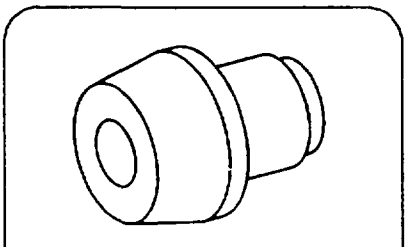

103 589 00 14 00

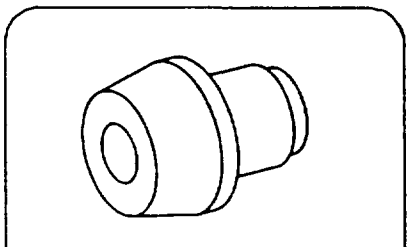

103 589 01 14 00

Shop-made tool

Sleeve for pressing on radial seal in front cover.

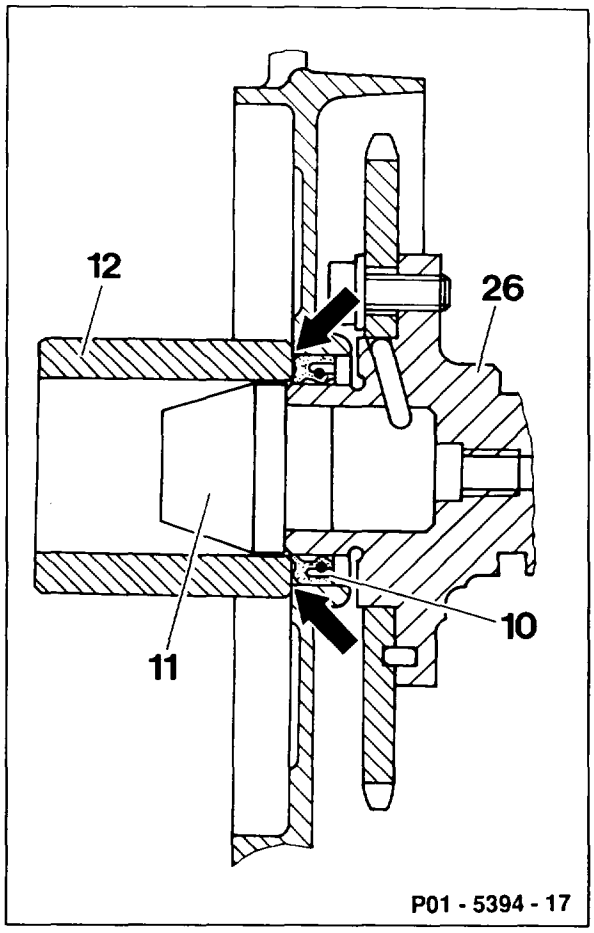

Replacing

1 Use a screwdriver to press out radial seal (10), or if front cover removed, knock out with a suitable drift.

⚠

If front cover installed, do not damage camshaft and mounting hole for the radial seal (10).

2 Fit insertion sleeve (11) onto camshaft (26).
Camshaft inner Ø 21.6
insertion sleeve 103 589 00 14 00
Camshaft inner Ø 20.0
insertion sleeve 103 589 01 14 00

3 Coat sealing lip of radial seal (10) all round with engine oil.

⚠
Do not use grease! Grease prevents the sealing lip of the radial seal transporting back the engine oil.
The inside of the mounting hole and the circumference of the radial seal must be free of grease and oil.

4 Fit radial seal (10) onto insertion sleeve (11) and press in flush (arrows) with sleeve (12) (shop-made).

⚠
The radial seal (10) must be perpendicular to the camshaft to ensure a proper seal.

5 Install in the reverse order.

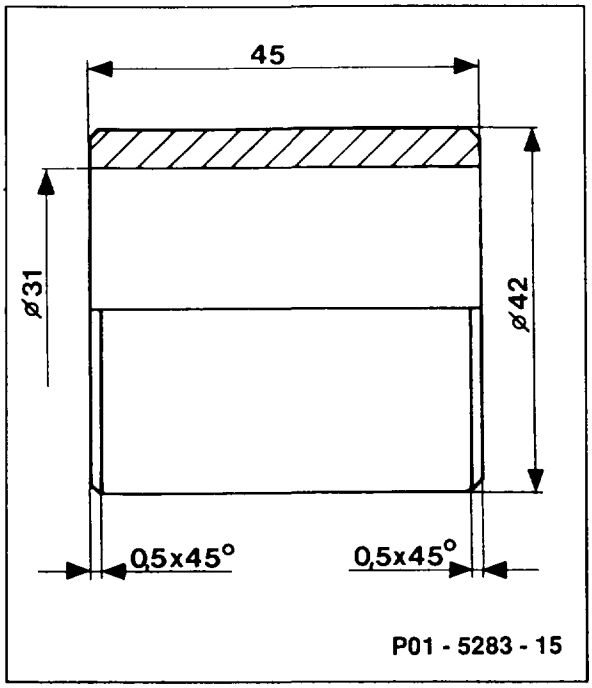

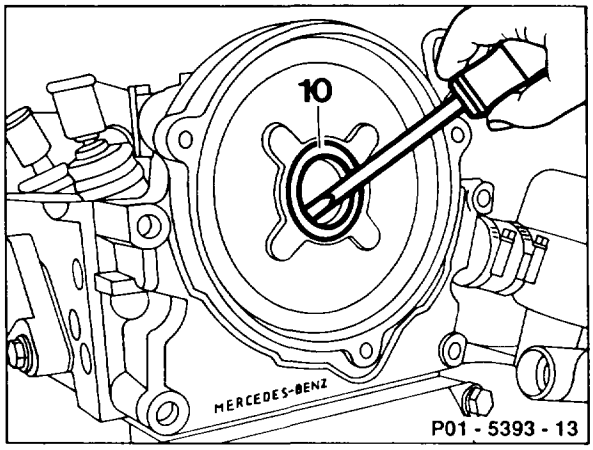

01–2220 Removing and installing closing cover

Preceding work:
Manual or automatic transmission removed (26–020 or 27–600).
Manual transmission: flywheel removed (03-4100) or two-mass flywheel removed (03-4620).
Automatic transmission: driven plate with ring gear removed (03-4100)

Operation no. of operation texts and work units or standard texts and flat rates
01-8913

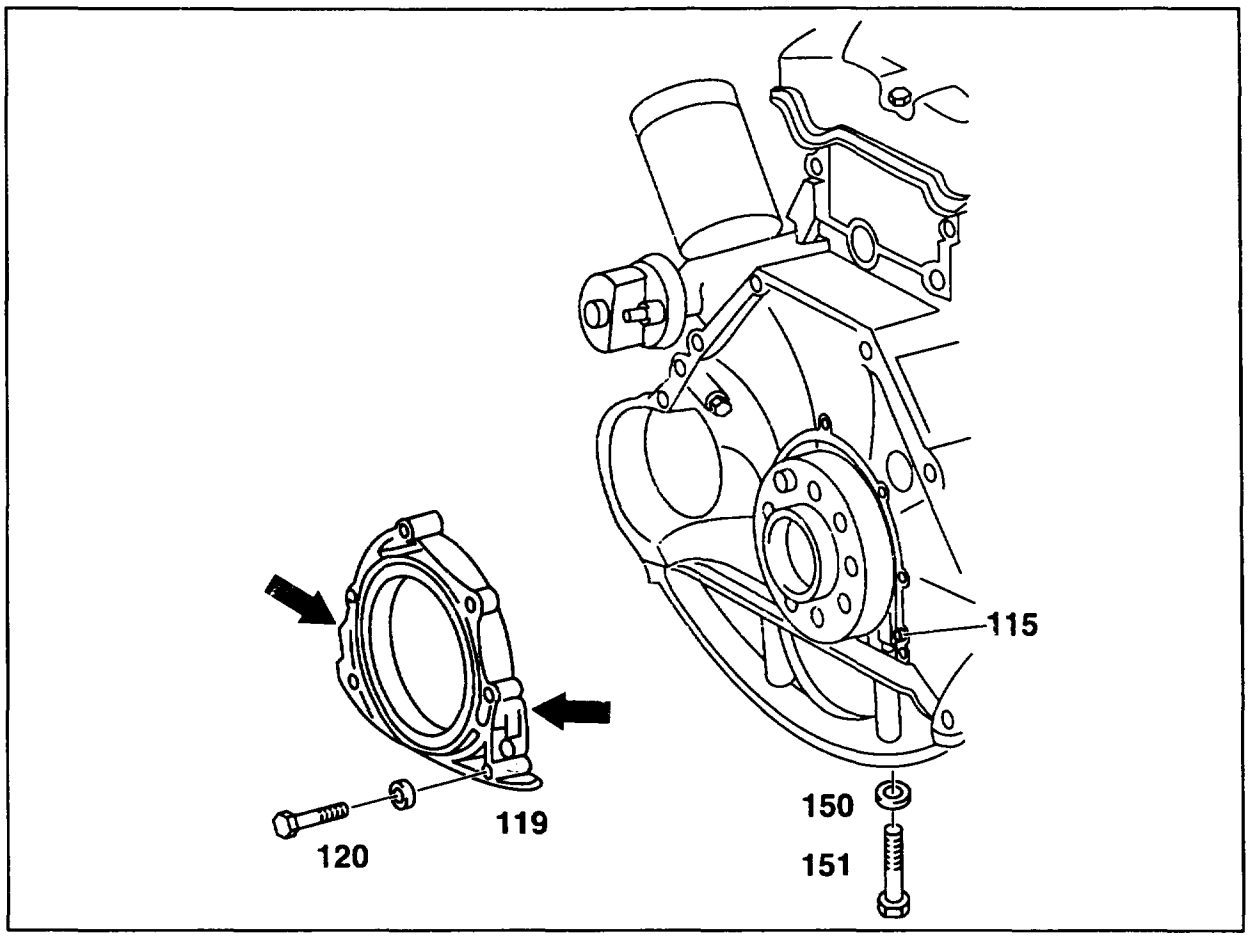

P01-6049-57

Bolts (120 and 151) . . . . . unscrew, screw on (10 Nm)

⚠
Tighten bolts (120) first when installing. Pay attention to spring washers (150).

Closing cover (119)	remove, install. Press off at shoulders (arrows). Push closing cover (119) over inner part of insertion tool 601 589 03 43 00. ⚠ Do not damage gasket of oil sump. Pay attention to gasket of oil sump. On 4MATIC engines: seal oil sump with sealant 001 989 61 20 10.
Contact surface of radial seal on crankshaft	examine. If contact surface has grooves, remove radial seal (03-3270) and install repair size radial seal with sealing lip offset to the inside.
Sealing surfaces	clean and coat with sealant 001 989 45 20 10.
Sealing surfaces	clean.
Dowel pins (115)	do not lose.
Radial seal	examine, replace if necessary (03-3270). Coat sealing lip with engine oil. ⚠ Do not use grease! Grease prevents the sealing lip of the radial seal transporting back the engine oil.
Rear of engine	check for leaks (01-2240).

Special tools

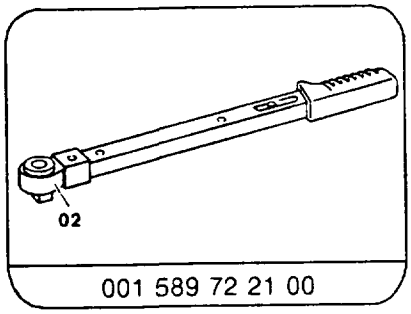

001 589 72 21 00

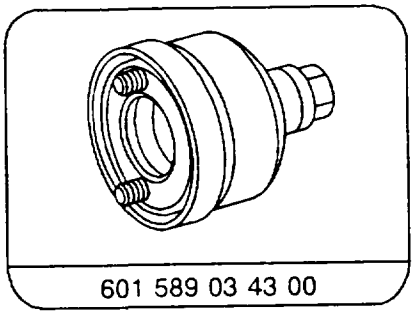

601 589 03 43 00

Note

The closing cover is sealed on the crankcase with sealant and centered with 2 dowel pins. In addition, it is bolted to the oil sump and sealed down the way by the oil sump gasket, or on 4MATIC engines with sealant.

There must not be any scoring or unevennesses in the sealing surface of the closing cover and of the crankcase.

01–2240 Checking for leaks at rear of engine

Preceding work:
Manual transmission: flywheel removed (03-4100) or two-mass flywheel removed (03-4620)
Automatic transmission: driven plate with ring gear removed (03-4100)

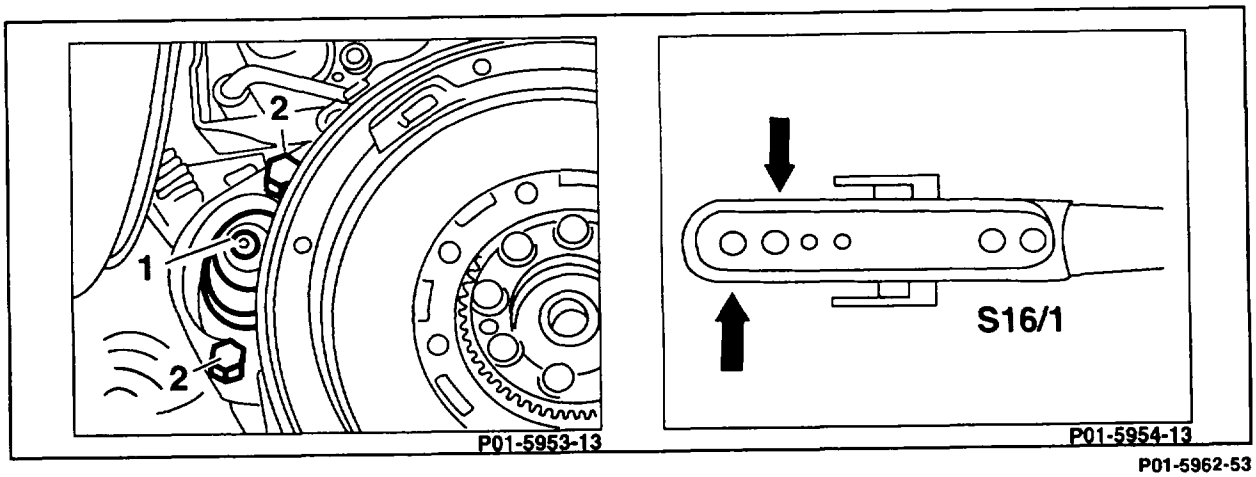

P01-5962-53

Rear of engine	clean
Dried surrounding area	spray with Mercedes-Benz white contrast spray, part no. 000 989 03 59
Oil level in engine	check, adjust to correct level (18-0020)
Manual transmission: flywheel	install (03-4100)
Manual transmission: two-mass flywheel	install (03-4620)
Automatic transmission: driven plate with ring gear	install (03-4100)
Starter (1)	bolt to crankcase with M10×60 hexagon bolts (2)
Engine	support at rear in installation position, secure
Automatic transmission: contacts (arrows) at starter lockout switch (S16/1)	bridge
Engine	start and check for leaks

01-3100 Removing and installing oil sump (except 4MATIC)

Preceding work:
Hood raised to vertical position (01-0080).
Bottom engine compartment panel removed (Maintenance Manual Volume 2, Op. no. 6190).
Front axle on model 107 removed (33-1000).
Air cleaner removed (09-1031).
Fan shroud removed (20-3400).

Operation no. of operation texts and work units or standard texts and flat rates
01-7500

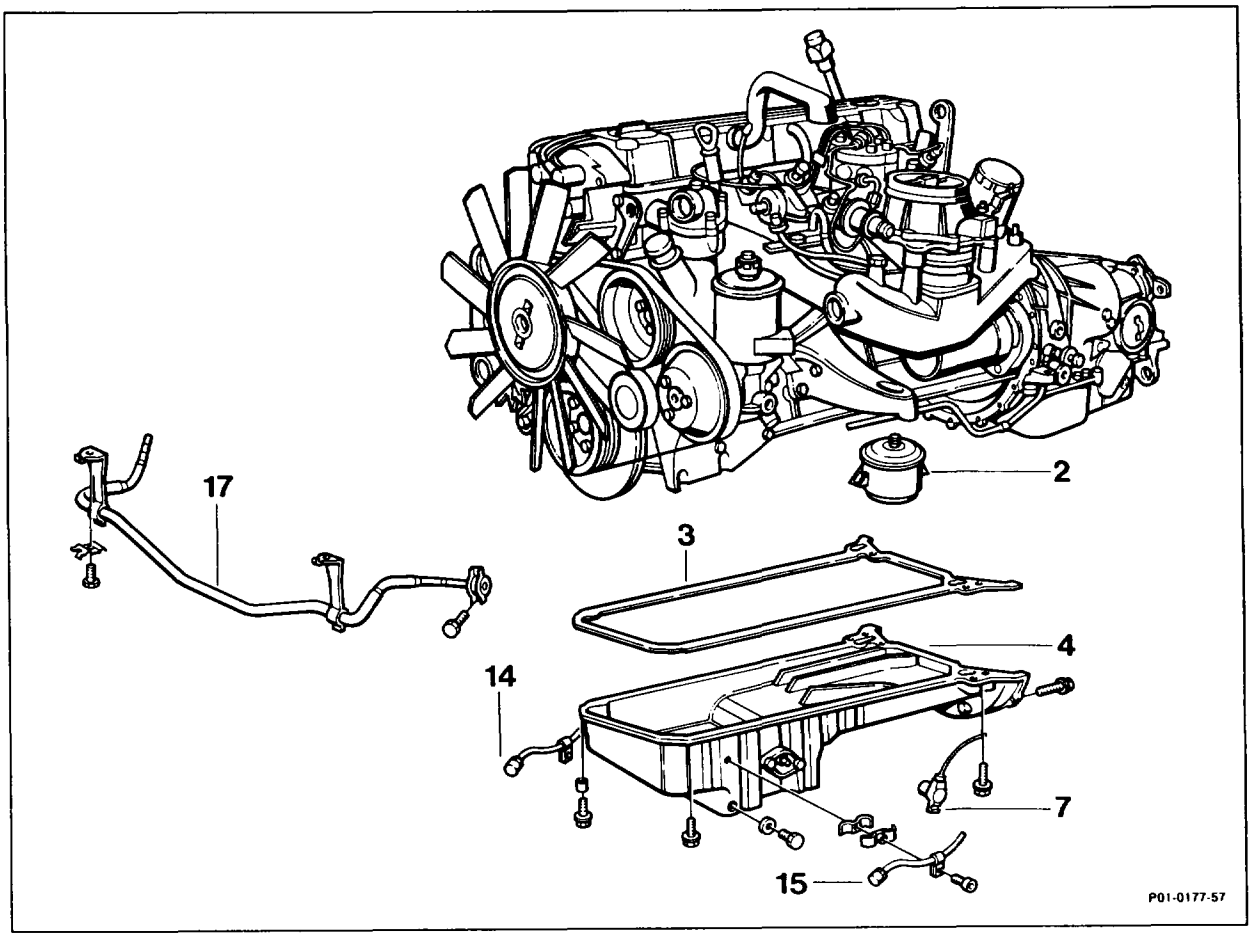

Ground cable at battery	disconnect, connect
Engine oil	drain, pour in (18-0020)
Front engine mounts (2)	unbolt from below, bolt on (22-2110)
Model 107, 126: engine shock absorber	remove, install (22-2400)
Plug connection of oil level sensor (7)	unplug at oil sump, plug in
Plug connection of oil pressure switch	unplug, plug in
Automatic transmission: oil pipes (14, 15) at oil sump	unbolt, bolt on
Model 129: oil cooler pipes at oil sump (4)	unbolt, bolt on

Models 126, 201: oil pipe of level control	unbolt at oil sump (4), bolt on
Models 129, 201: torsion bar (17)	remove, install (32-300)
Models 129, 201: left drag link with steering damper	unbolt, detach and turn to the rear right, bolt on (46-550)
Guard plate	insert at component compartment wall
Engine	raise
Oil sump	unbolt at crankcase, bolt on. M6 bolts 10 Nm, M8 bolts 21 Nm, M10 bolts 40 Nm
Oil sump (4)	remove downward to the front
Gasket of oil sump (3)	replace
	⚠ Before tightening the oil sump bolts, aline oil sump (4) to the rear contact surface on the transmission, allow to rest on surface.
Engine	run and check for leaks

Tightening torques in Nm

Oil sump to crankcase	
M6 hexagon bolts	10
M8 hexagon bolts	25
M10 hexagon bolts	40
Oil pipes at oil sump	10

Special tool

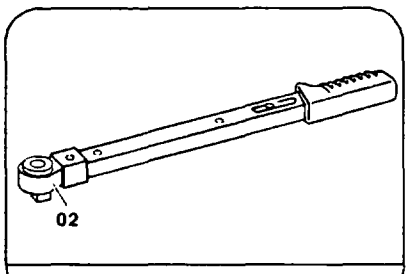

001 589 72 21 00

Shop-made tools

Metal panel for component compartment wall	Dimensions: approx. 320 × 380 × 1
Guard plate for radiator/condenser	Dimensions: approx. 480 × 600 × 1

01-3200 Removing and installing oil sump (4MATIC front axle housing)

Preceding work:
Warning instructions when hood open (01-0085).
Air cleaner removed (09-4000).
Bottom engine compartment panel removed (Maintenance Manual Volume 2, Op. no. 6190).
Fan shroud removed (20-3400)

Operation no. of operation texts and work units or standard texts and flat rates
01-7500

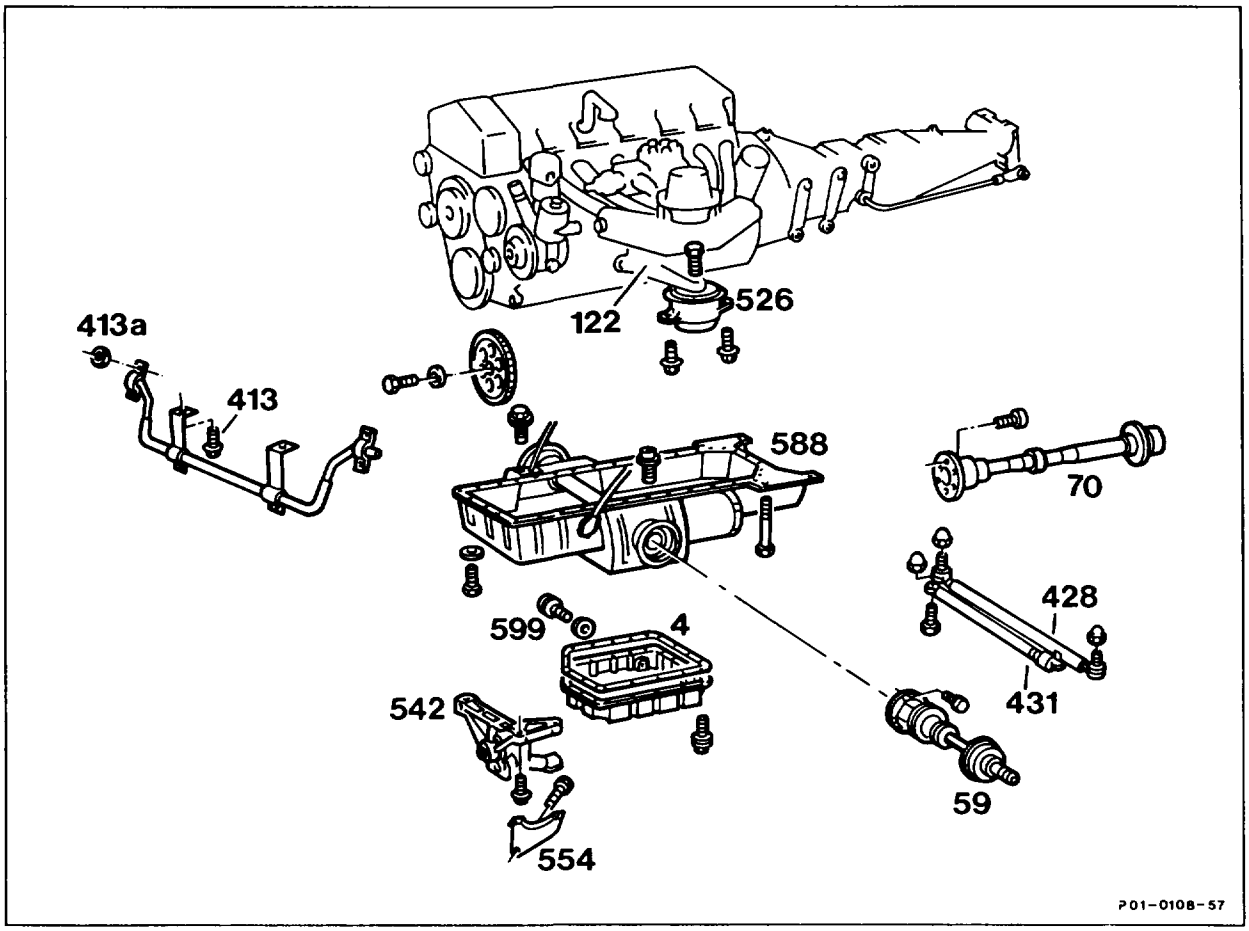

Ground cable at battery	disconnect, connect
Engine oil	drain, pour in (18-0020) (step 2)
Both front engine mounts (526)	unbolt from below, bolt on (22-2110)
Torsion bar	remove, install (32-300)
Dipstick guide tube	remove, install, 10 Nm (steps 5 - 6)
Drag link (428) together with steering damper (431)	remove, install

Exhaust system	unbolt at flange of exhaust manifold (step 8)
Front propeller shaft (70)	unbolt, bolt on (step 9)
Front axle shafts (59)	unbolt, bolt on (steps 10 – 11)
Plug connection of oil level switch	unplug at oil sump or front axle housing (step 12)
Bottom part of oil sump (4)	remove, install, 10 Nm (step 13)
Support (554) for oil pump (542)	remove, install (step 14)
Guard plate at component compartment wall	insert, remove (step 15)
Engine	raise, lower (steps 16 – 17)
Pistons of cylinders 3 and 4	position to TDC (step 18)
Left engine support (122) at crankcase	remove, install, M8 20 Nm (step 19)
Front axle housing (588)	unbolt, bolt on (step 20), M6 10 Nm, M8 22 Nm. Apply sealant 001 989 45 20 10 to contact surfaces of front axle housing (step 22)
Oil pump (542)	remove, install, 25 Nm (step 21)

Tightening torques in Nm

Oil sump to crankcase	
M6 hexagon bolts	10
M8 hexagon bolts	25
M10 hexagon bolts	40
Oil pipes at oil sump	10
Dipstick guide tube to front axle housing	10

Special tools

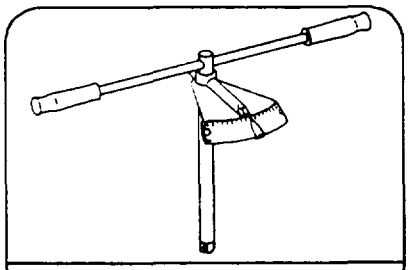

001 589 51 21 00

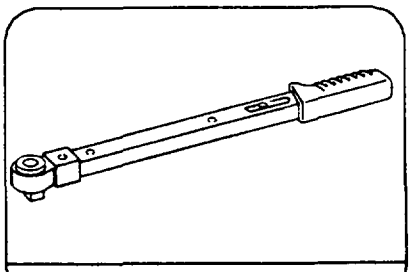

001 589 66 21 00

Shop-made tools

Metal panel for component compartment wall	Dim.: approx. 320 × 380 × 1
Guard plate for radiator/condenser	Dim.: approx. 480 × 600 × 1

Removal, installation

1 Disconnect ground cable at the battery.

2 Drain engine oil (18-0020)

Note
Unscrew oil drain plug (arrow) at the large oil sump (4)

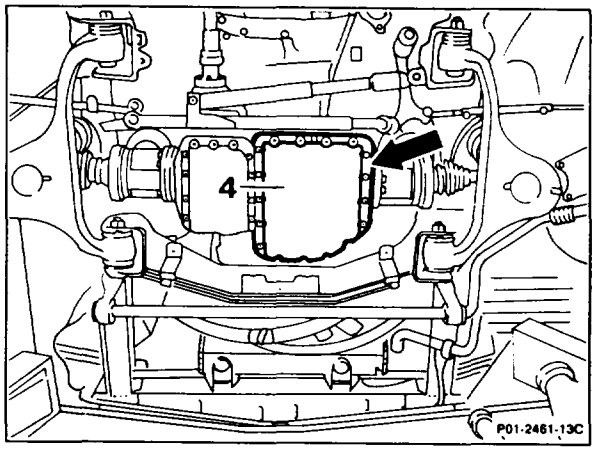

3 Unbolt front engine mounts from below, bolt on (22-2110)

4 Remove front torsion bar (32-300)

5 Unbolt bracket of dipstick guide tube (24) at the exhaust manifold.

6 Unscrew bolt (23) and pull dipstick guide tube (24) out of front axle housing.

Installation note
Tightening torque 10 Nm.

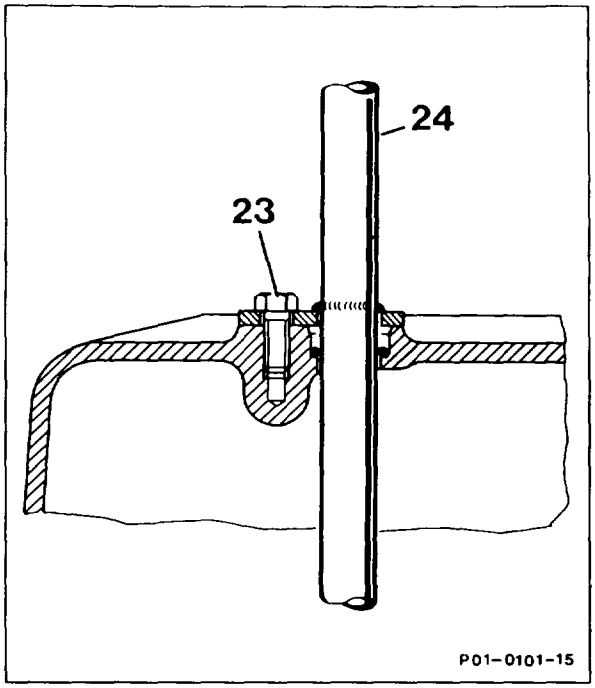

7 Unbolt steering damper (431) at body and remove drag link (428).

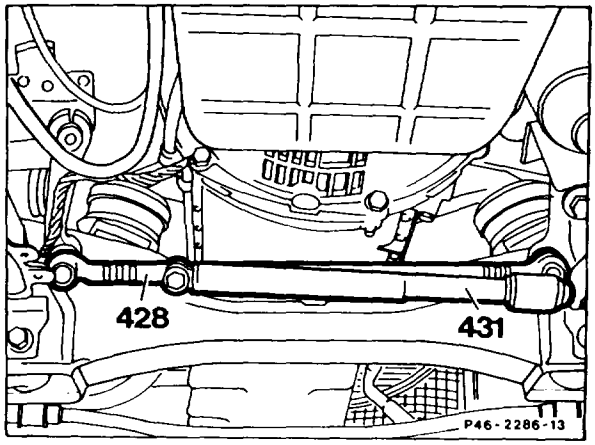

8 Unscrew bolts (arrows) of the exhaust system at flange of exhaust manifold.

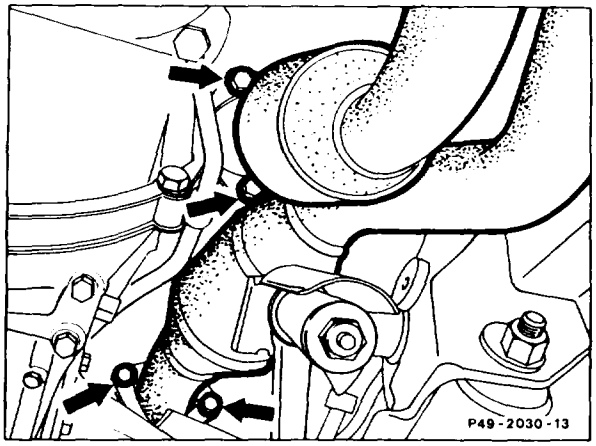

9 Unbolt propeller shaft (70) to front axle at front axle housing. To do this, counter-hold the connecting flange with 65 mm open-end wrench and unscrew six bolts.

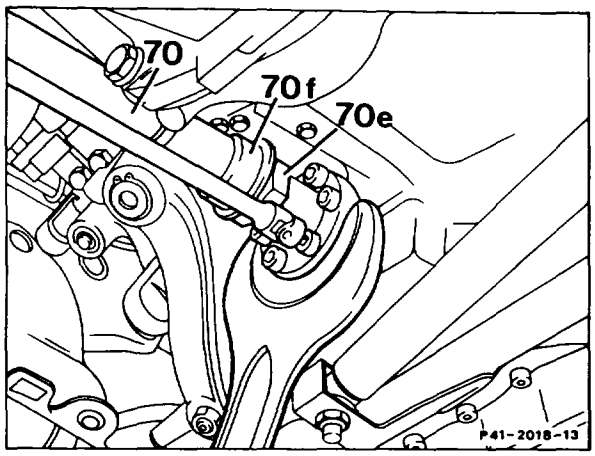

⚠

Do not counter-hold at the clamping nut (70e). Ensure that the connecting flange is not pushed out of the splines.

Installation note
Replace self-locking bolts. Pay attention to tightening torque.

10 Unbolt front axle shafts (59). Operate footbrake in order to slacken the six bolts.

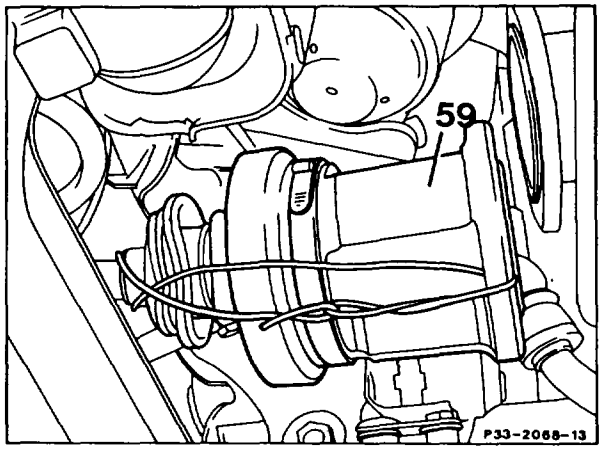

Installation note
Replace self-locking bolts. Pay attention to tightening torque.

11 Push front axle shaft (59) together as far as possible and fix in this position with wire. Place front axle shafts down on the wishbone. Do not pull inner joint too far apart and angle in order to prevent the tripoid joint rollers of the journals which run in needle bearings dropping out at the tripoid cross.

12 Unplug connector (arrow) of the oil level sensor on the left at oil sump and at front axle housing, respectively.

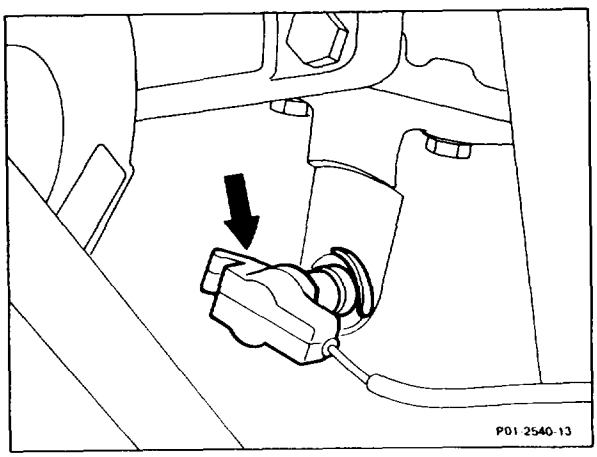

13 Unscrew bolts for bottom section of oil sump (4) and take off bottom section of sump (4).

Installation note
Tightening torque 10 Nm.

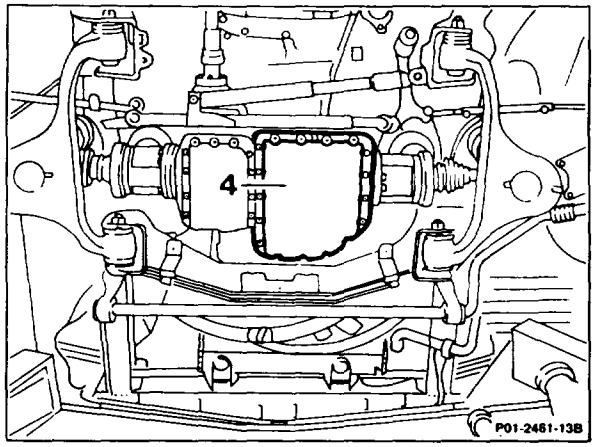

14 Unscrew bolts (2) and bolt (3). Take off support (1) at intake snorkel of oil pump.

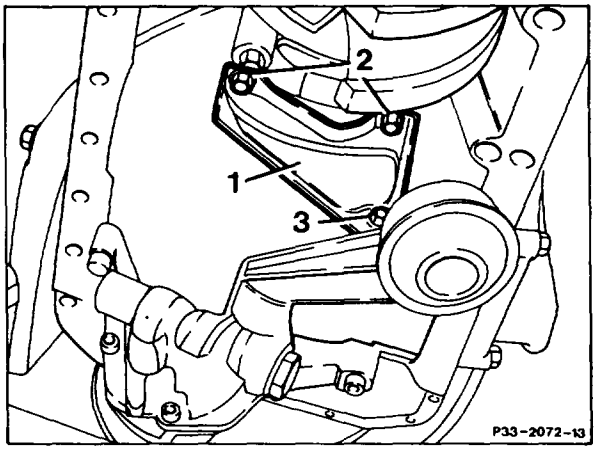

15 Insert guard plate (arrow) between component compartment wall and engine.

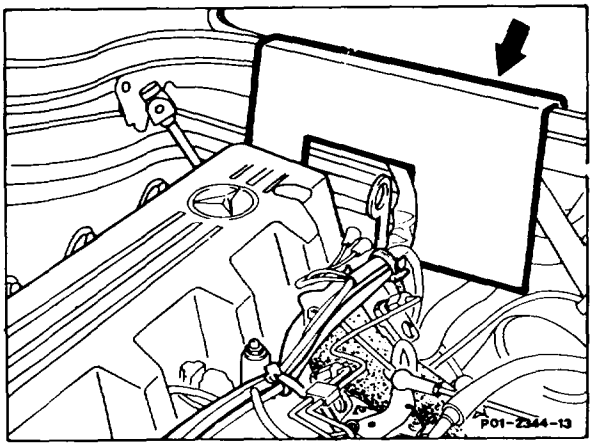

16 Attach engine hoist to front suspension lug.

17 Raise engine slightly.

⚠

When raising the engine, ensure that the fan does not damage the radiator and also pay attention to the rear suspension lug, oil filter and coolant hoses.

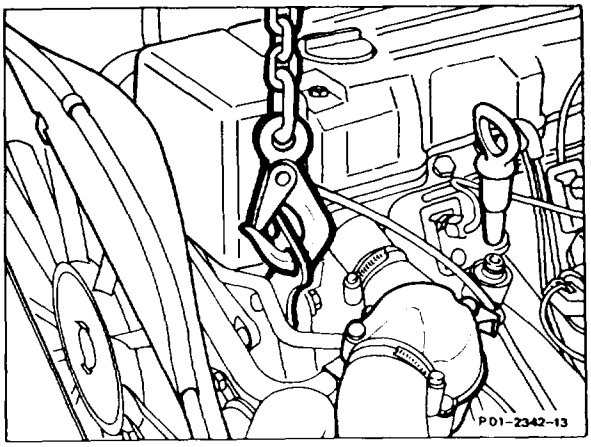

18 Position pistons of cylinders 3 and 4 to TDC.

The pistons of cylinders 3 and 4 are at the TDC position when the marking "a" on the vibration damper is alined with the TDC pointer.

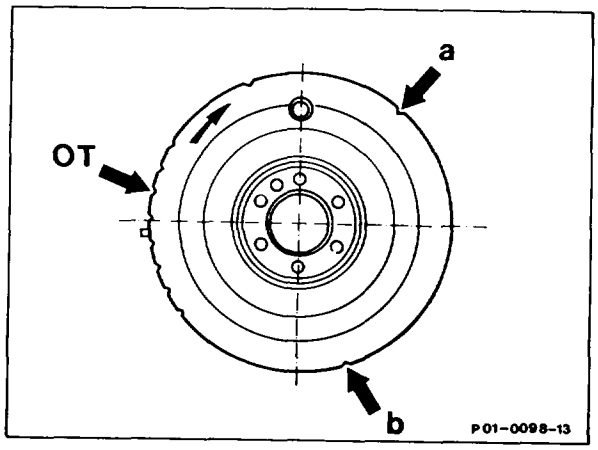

19 Unbolt left-hand engine support at the crankcase and take off together with engine mount.

Installation note
Tightening torque 25 Nm.

20 Unbolt front axle housing from transmission and crankcase. Support front axle housing.
On vehicles fitted with automatic transmission, unbolt the oil pipe from and to the transmission along the front axle housing.

Note
The M8 bolts (arrows) on the left side of the engine can be reached from above. To turn the two bolts below the starter, position screwdriver bit between starter and crankcase.

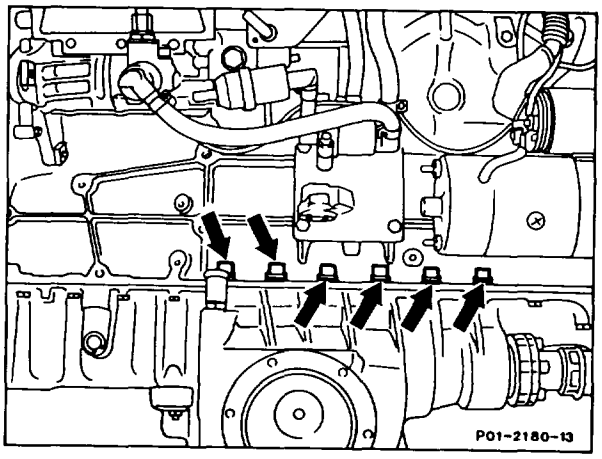

21 Lower front axle housing as far as possible. Unscrew bolt for sprocket (1) and take off sprocket (1). Unscrew bolts (arrows) and take out oil pump downward. Take off front axle housing to the rear. Pay attention to drive chain of oil pump.

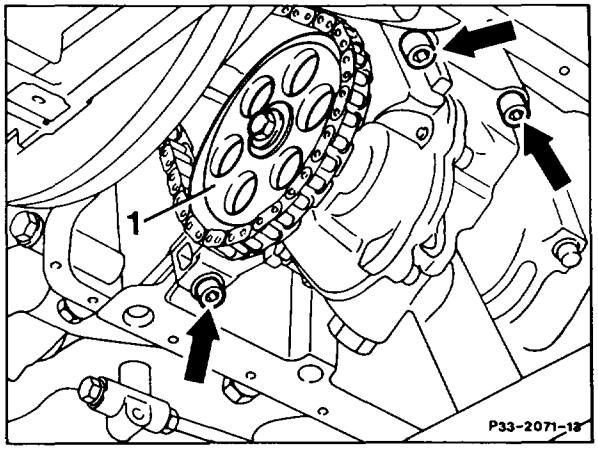

Installation note

Tightening torques

Bolts of sprocket	30 Nm
Bolts of oil pump	25 Nm

22 Clean contact surfaces on front axle housing. Apply sealant 001 989 45 20 10 to the contact surface on front axle housing (a = silicon bead Ø 1.5 mm). First mate front axle housing to the transmission, then bolt to crankcase.

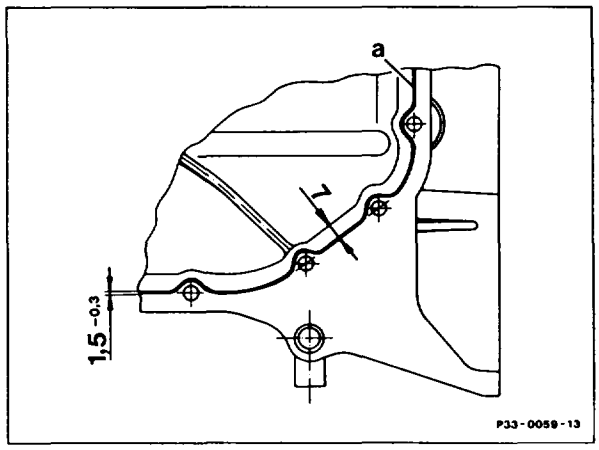

Installation note

Pay attention to different lengths of bolts.

Tightening torque	M6 :	10 Nm
	M8 :	21 Nm

Replace self-locking bolts and nuts.

Installation is performed in the reverse order.

01-4000 Notes regarding cylinder head

Operation no. of operation texts and work units or standard texts and flat rates

Combustion chambers

The combustion chambers of the cylinder heads of engines 103.94 and 103.98 differ and must not be interchanged. In addition, the cylinder heads of the engines with open combustion chamber (2nd version) differ to the cylinder heads used previously with squash areas (1st version).

Use cylinder head 1st version (squash areas) only together with the relevant pistons (see replacement parts).

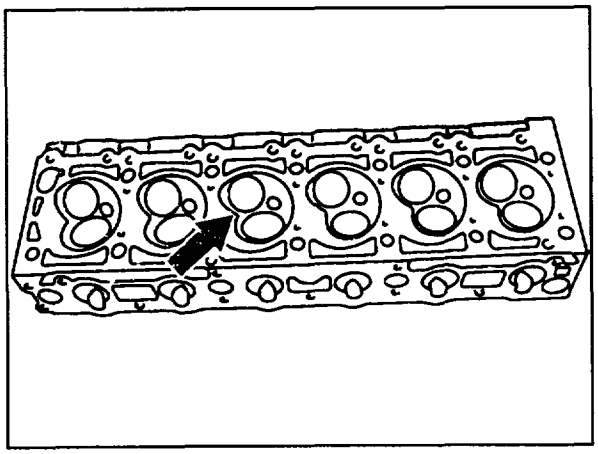

P01-6041-13

Use cylinder head 2nd version with open combustion chamber (arrow) only together with the relevant pistons.

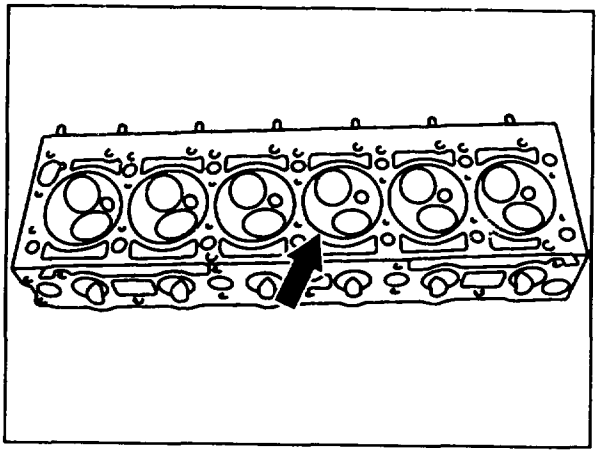

P01-6042-13

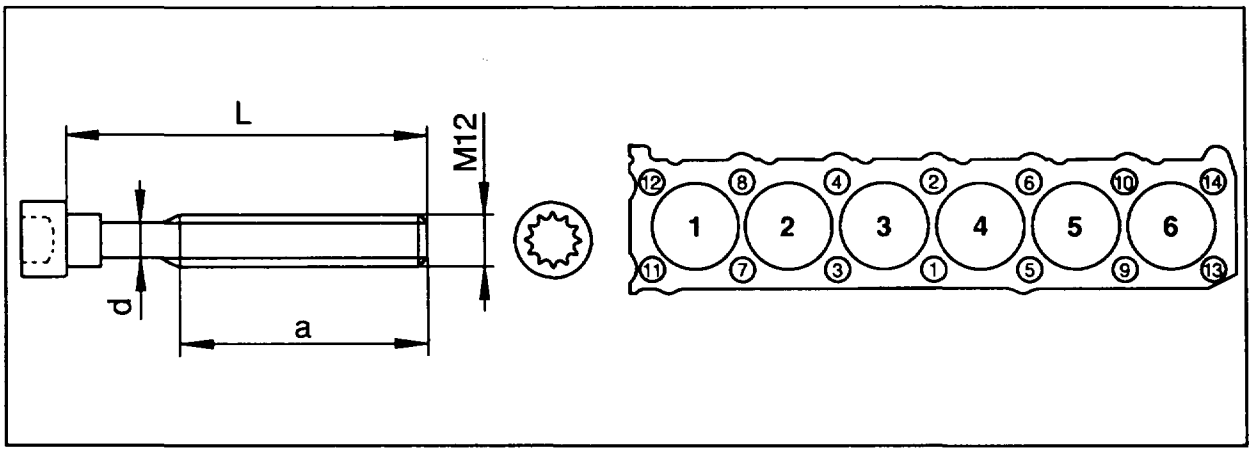

P01-6044-53

Checking

Length (L) of cylinder head bolts . . . . . check.

Note

The cylinder head bolts are subject to permanent stretch each time they are tightened. If the maximum length (L) is exceeded, the bolts should be replaced. Pay attention to different versions; see note.

Tightening

Thread of cylinder head bolts and threaded holes in crankcase . . . . . clean.

⚠

Fluids injected into the threaded holes can destroy the crankcase.

Cylinder head bolts . . . . . oil thread and bolt head contact surface.

Cylinder head bolts	tighten in stages in the order of the tightening diagram, starting with 1 1st stage 55 Nm 2nd stage 90° tightening angle 3rd stage 90° tightening angle

⚠

The cylinder head gasket is not watertight until the engine has reached its normal operating temperature and the gasket has swollen. For this reason, do not pressure-test cooling system until the engine has reached its operating temperature.

Tightening torques in Nm

Cylinder head bolts when engine cold	1st stage 2nd stage 90° tightening angle 3rd stage 90° tightening angle	55

Length of cylinder head bolt

Version	Length (L) new	Maximum length (L)
A	105 mm	108.4 mm
B	102 mm	105.8 mm

Modified cylinder head bolts

The M12 × 105 mm cylinder head bolts with washer (A) have been replaced by the M12 × 102 mm collar bolt without washer (B). The cylinder head bolts of version (A) with washers can be replaced with the version (B) without washer and vice versa.

Version (B) fitted as standard from 11/1988 up to 02/1989 and as of 11/1990.

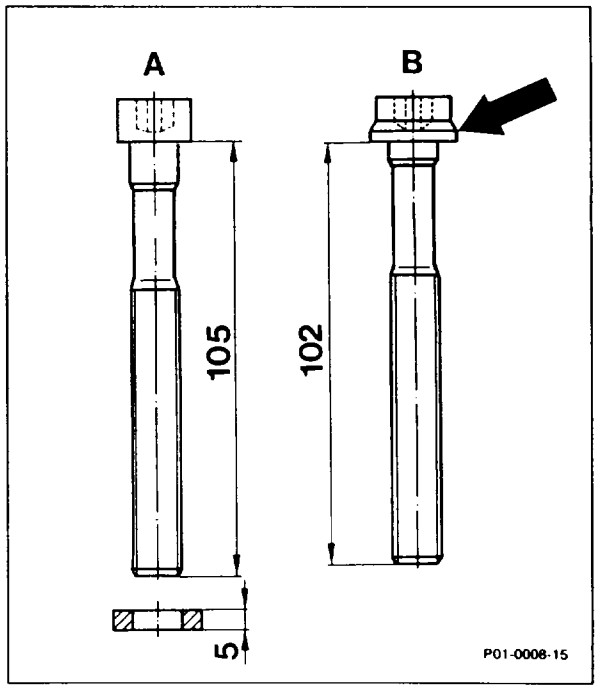

Special tools

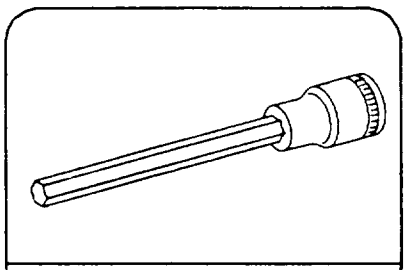

000 589 05 07 00

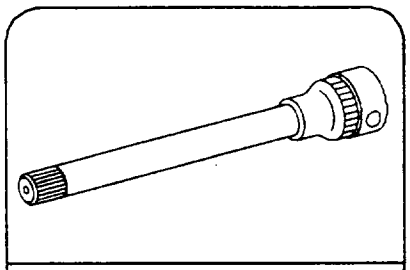

617 589 00 10 00

01–4070 Servicing spark plug threads in cylinder head

Operation no. of operation texts and work units or standard texts and flat rates

Special tools

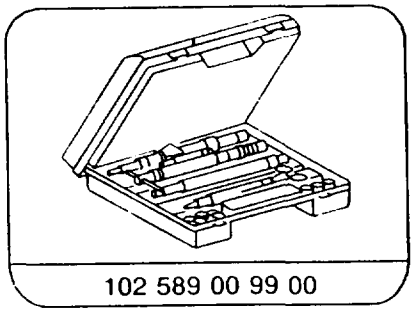

102 589 00 99 00

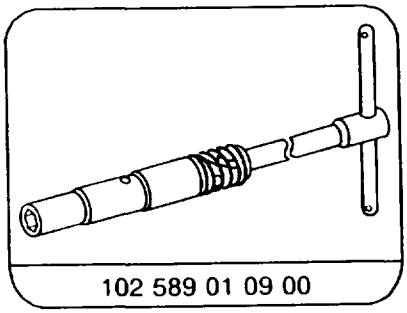

102 589 01 09 00

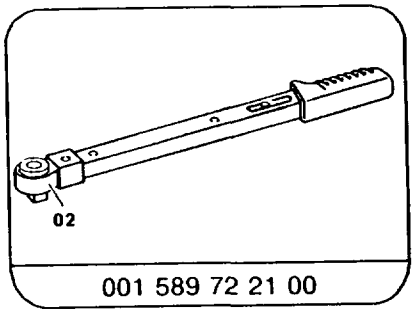

001 589 72 21 00

Note

M14 × 1.25 × 14.4 mm HELI-COIL threaded inserts (block length 9.1 mm) can be inserted into the cylinder head with the HELI-COIL Repair Kit 102 589 00 99 00.

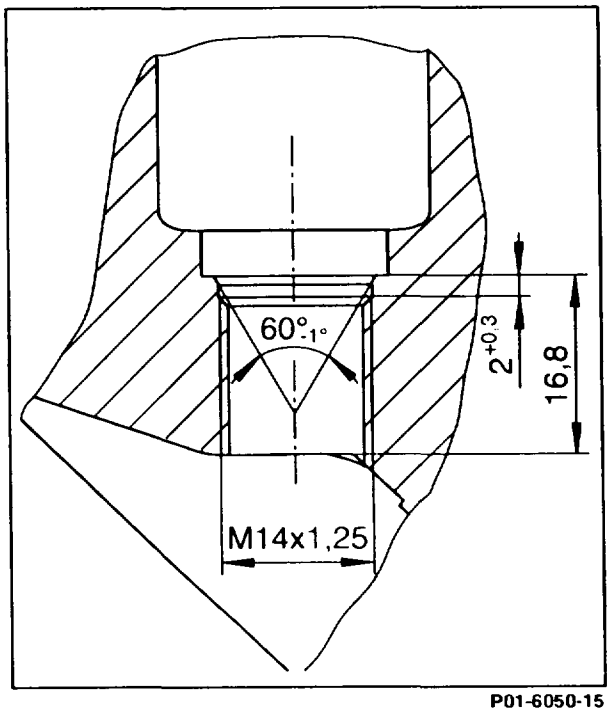

Original thread

P01-6050-15

Servicing

1 Remove cylinder head cover, install (01-0500)

2 Position piston of the relevant cylinder to 20° – 30° before TDC.

3 Pack grooves (arrows) of combination thread tap (9) of thread tapping unit with grease and screw combination thread tap into the damaged thread. When doing this, push the guide bush (11) into the spark plug recess.
Screw in combination thread tap sufficiently until the guide tube (12) touches and is resting against the stop ring (10).

⚠
With the cylinder head fitted, remove combination thread tap after approximately each 5 rotations, clean grooves of chips and grease and re-pack with grease.

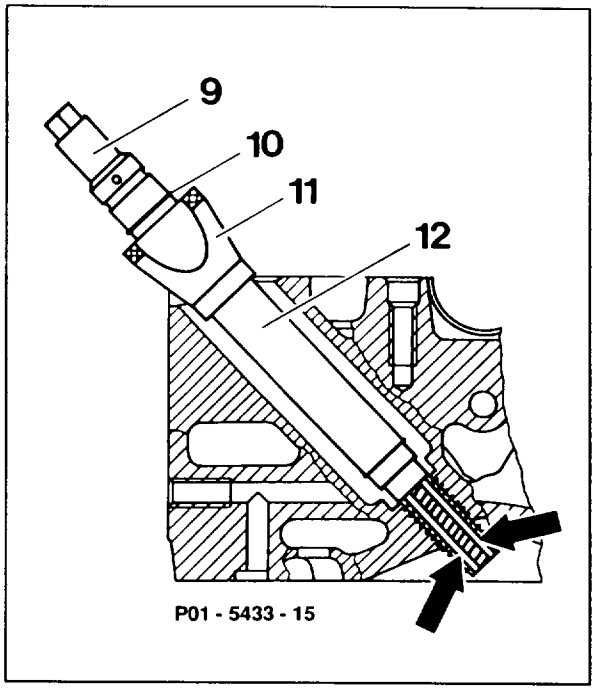

4 Check length of HELI-COIL thread insert (8). Use only the HELI-COIL insert with 9.1 mm block length.

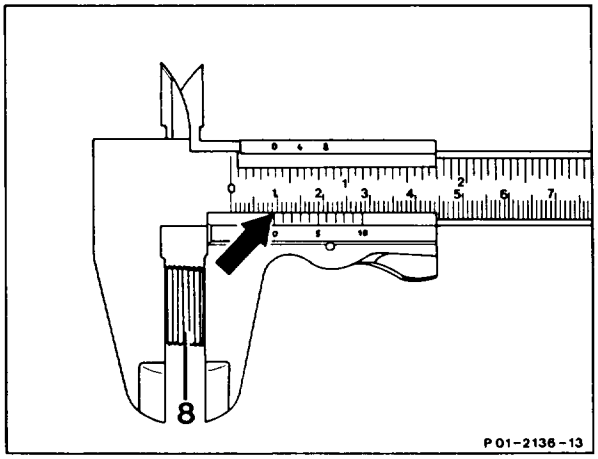

5 Install HELI-COIL thread insert by placing HELI-COIL insert (8) into the fitting tool so that the stub end (arrow) of the insert is facing the pre-tensioning cartridge (16).
Turn HELI-COIL insert with the inserting spindle (13) through the pre-tensioning cartridge until the stub end (arrow) is flush with the face end of the pre-tensioning cartridge.

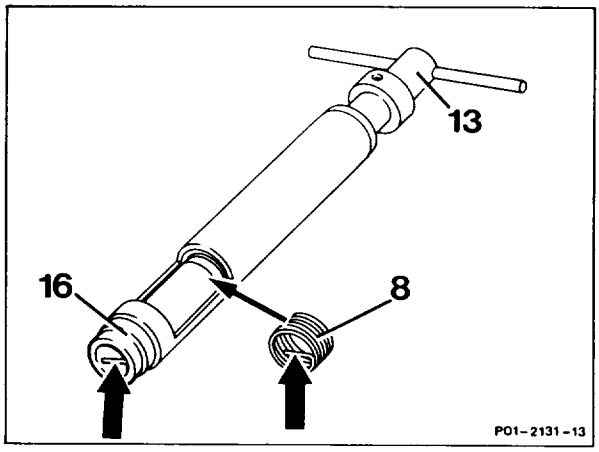

6 Place insertion tool (2) onto the tapped hole, hold casing sleeve (15) tight and turn insertion spindle until the stop ring (14) is touching the casing sleeve.

Note
When inserting the HELI-COIL thread insert, turn back casing sleeve (15) slightly if it jams.

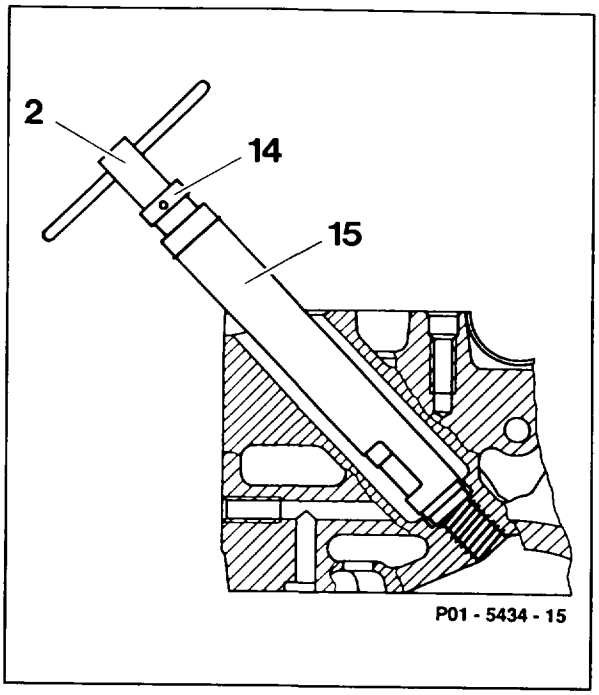

7 Shear off follower stud (arrow) of HELI-COIL threaded insert.
To do this, place sleeve (18) of stud shearing unit over follower stud, insert opened pliers (17) into the sleeve and close pliers. The serrated lock (S) must engage when this is done.

Turn sleeve (18) to the left as far as the stop and hold tight.
Move pliers slightly up and down and brake off follower stud.

⚠
If the follower stud inadvertently drops onto the piston crown, it is essential to remove it with a magnet.

8 Crank engine with starter (01-0110) to remove any chips which may have dropped onto the piston crown.

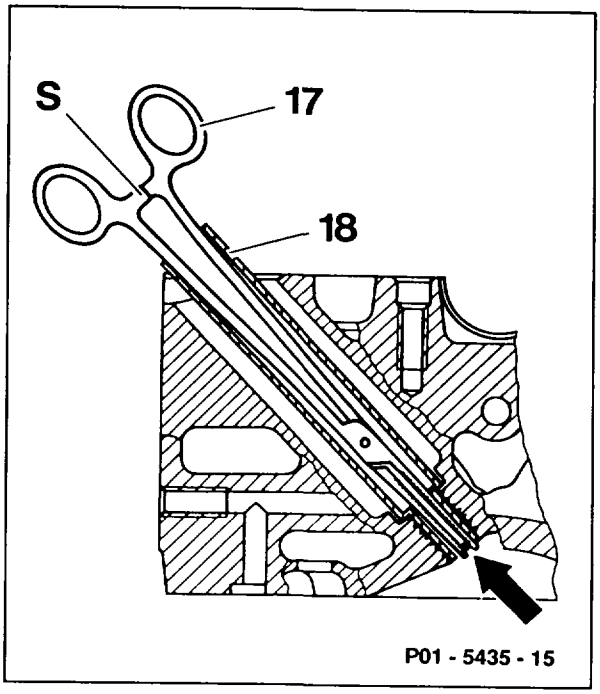

9 Caulk HELI-COIL threaded insert. To do this, grease the tapered thread of the caulking tool (6), screw caulking tool into the installed HELI-COIL insert, tighten to 25 Nm and unscrew caulking tool.

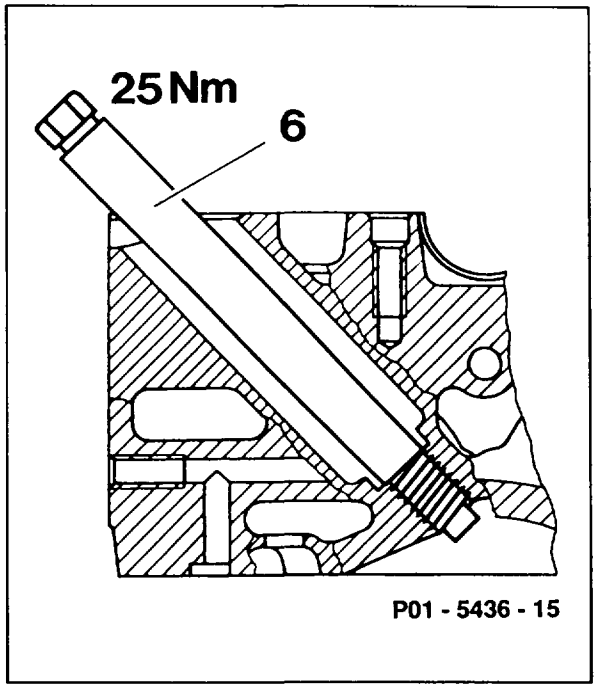

10 Screw in guide drift (4) as far as the shoulder (arrow).

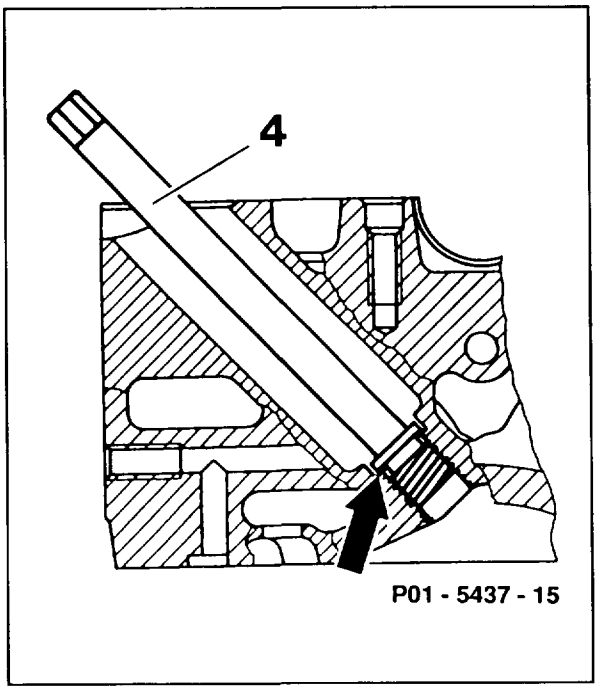

11 Push milling cutter (5) over guide drift (4) and mill seat for copper sealing ring.
The required milling depth is reached once the milling cutter is resting on the shoulder (arrow) and no further cutting resistance is felt.

⚠

Always blow out milling chips again.

12 First of all thoroughly blow out spark plug recess before removing guide drift (4).

13 Crank engine with starter (01-0110) to remove any chips which may have dropped onto the piston crown.

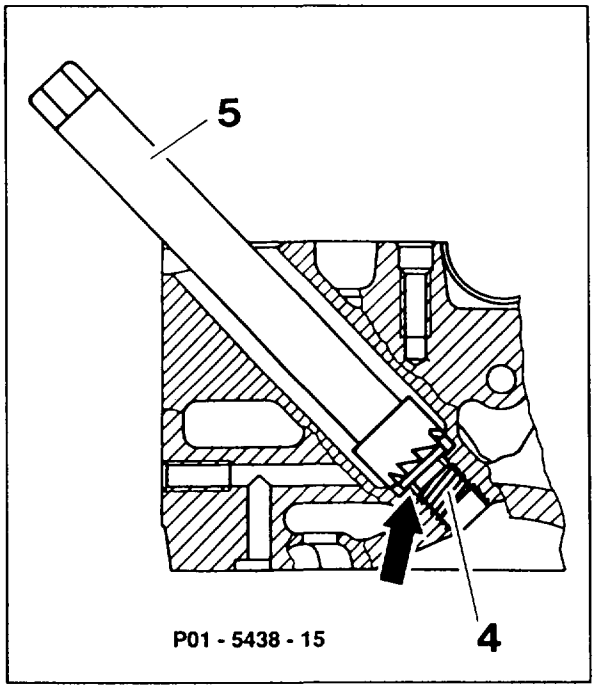

14 Insert copper seal (7) from HELI-COIL Repair Kit into the seat.

15 Screw in spark plug (20) and tighten to 30 Nm so that the tapered seat (arrow) is pressed into the copper ring (7).

16 Slacken spark plug (20) and tighten to 20 Nm.

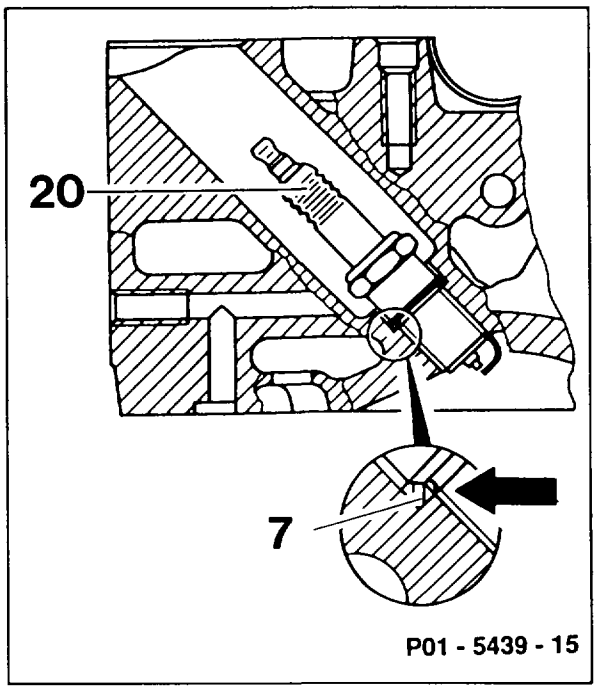

01–4150 Removing and installing cylinder head

Preceding work:
Warning instructions when hood open (01-0085).
Coolant drained (20–0100).
Front cover at top removed (01–2120).

Operation no. of operation texts and work units or standard texts and flat rates
01–5800, 01-5855

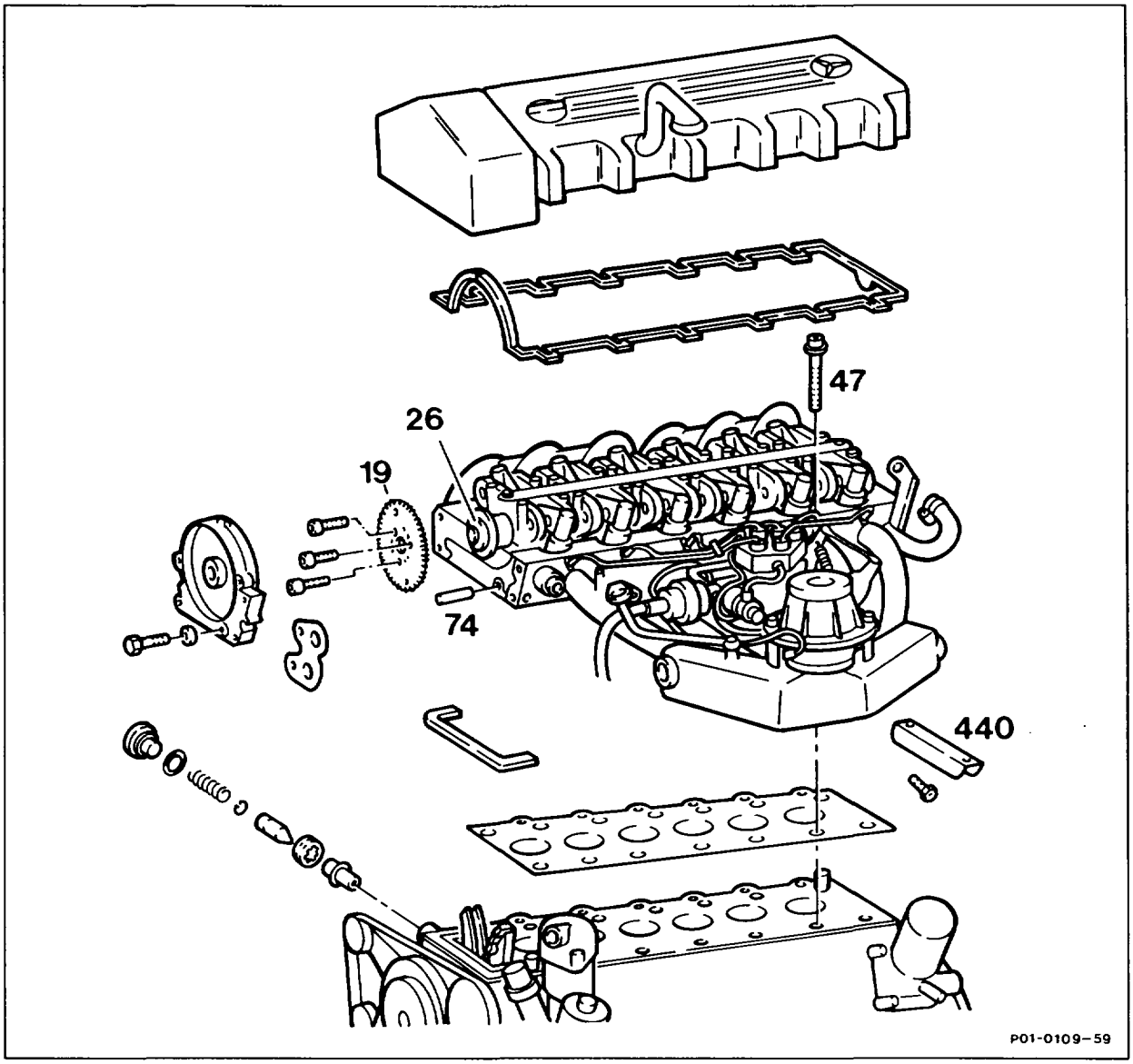

Camshaft sprocket (19)	mark relative to camshaft (26), detach and attach (step 1)
Chain tensioner	remove, install (05-3100)
Camshaft sprocket (19)	remove, install (05-2200)

Guide rail pin (74)	withdraw, knock in; use impact extractor 116 589 20 33 00, threaded pin 100 589 00 34 00 for this step (step 4)
Bracket of dipstick guide tube and intake manifold support (440)	unbolt, bolt on (steps 5 and 6)
Coolant hoses and heating water return pipe	detach, attach (steps 7 – 8)
Automatic transmission: dipstick guide tube	unbolt, bolt on (step 9)
Fuel pipes	detach, attach; briefly open fuel filler cap beforehand (step 10)
Bowden cable (accelerator control), model 124, 201	detach, attach (30-3250) (step 11)
Control pressure cable	detach, attach (step 12)
Model 107, 126: accelerator control linkage	detach, attach (steps 13 – 14)
Engine wiring harness	detach, attach (steps 15 – 17)
Exhaust system at exhaust manifold	unbolt, bolt on (step 18)
Cylinder head bolts (47)	slacken in reverse order of tightening diagram and remove (step 19)
Cylinder head together with intake manifold and exhaust manifold	take off, fit on and replace cylinder head gasket (steps 20 – 21)
Camshaft (26)	position to marking (step 22)
Piston of cylinder 1	set to TDC (step 23)
Threaded holes for cylinder head bolts in crankcase	clean
	⚠ Free of oil grease
Cylinder head bolts (47)	check, tighten (01-4050)
	⚠ The cylinder head gasket is not watertight until the engine has reached normal operating temperature and the gasket has swollen. For this reason, do not pressure-test cooling system until the engine has reached normal operating temperature.
Engine	warm up to normal operating temperature.
Cooling system	check for leaks (20-0170)

Special tools

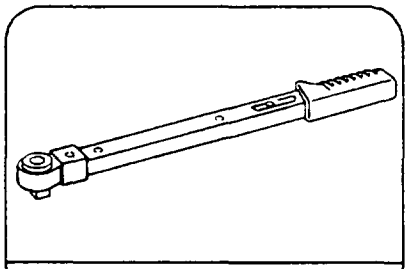

001 589 66 21 00

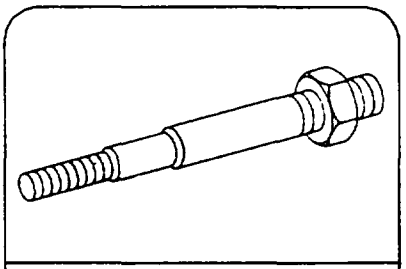

102 589 00 34 00

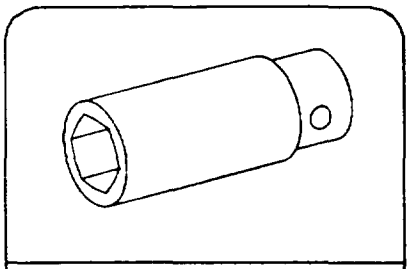

001 589 65 09 00

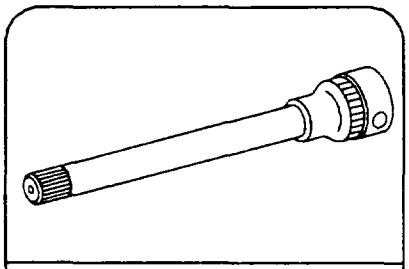

617 589 00 10 00

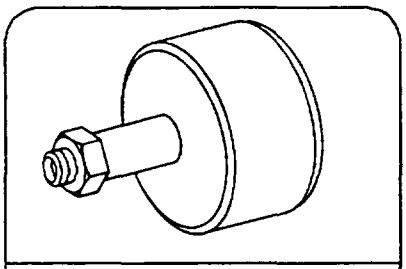

116 589 20 33 00

Notes

Detach cylinder head together with camshaft, intake manifold and exhaust manifold after engine has cooled down.

⚠

As of 12/86 an oil nozzle return flow lock (2) with stop collar (arrow) has been installed in the cylinder head. It is essential to install this oil nozzle when performing repairs (18-4150).

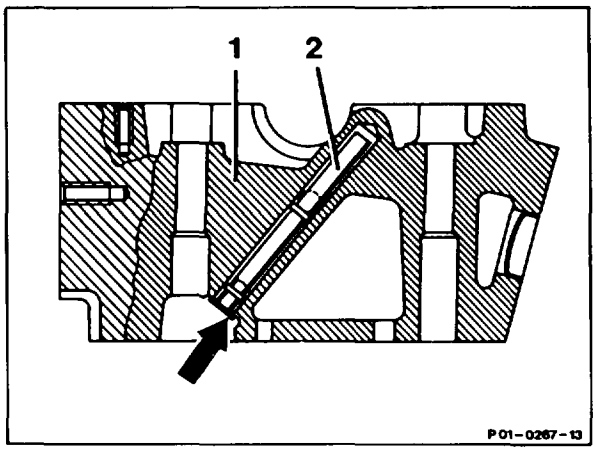

Only one cylinder head gasket with the same inner Ø is used for standard Ø and for the +0.5 mm and 1.0 mm repair sizes.

Combustion chamber surround in mm

Engine	Combustion chamber surround inner Ø
103.94	84.6
103.98	90.2

Removal, installation

1 Mark position of camshaft sprocket (19) relative to camshaft. This is done by applying coloured marking (arrow) next to fixing pin (20) on the camshaft sprocket (19).

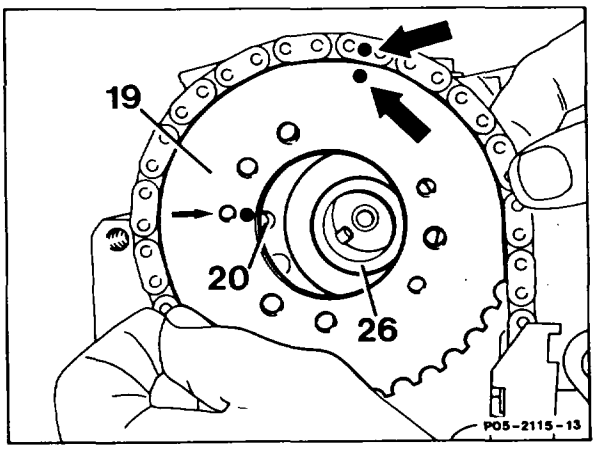

2 Remove chain tensioner (05-3100).

3 Unbolt camshaft sprocket, remove (05-2200).

4 Use impact extractor 116 589 20 33 00 and threaded pin 100 589 00 34 00 to pull out guide rail pins (74).

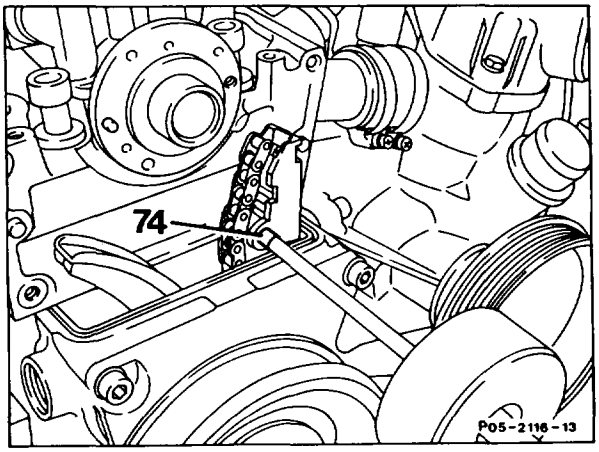

Installation note

The thread in the guide rail pin (74) must be facing forward in direction of travel when it is knocked in.

5 Unscrew bracket (126) of dipstick guide tube.

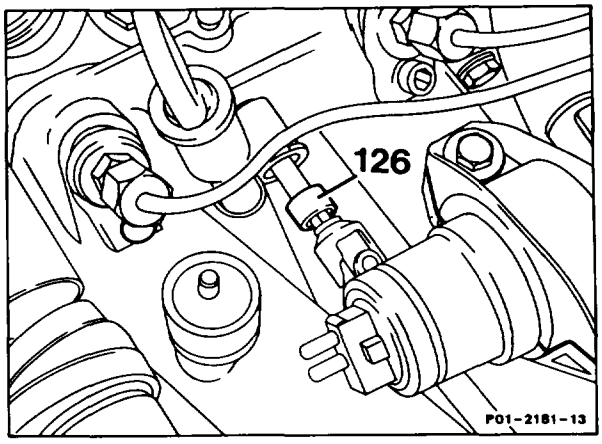

6 Unscrew both intake manifold supports (440) at top, detach at bottom.

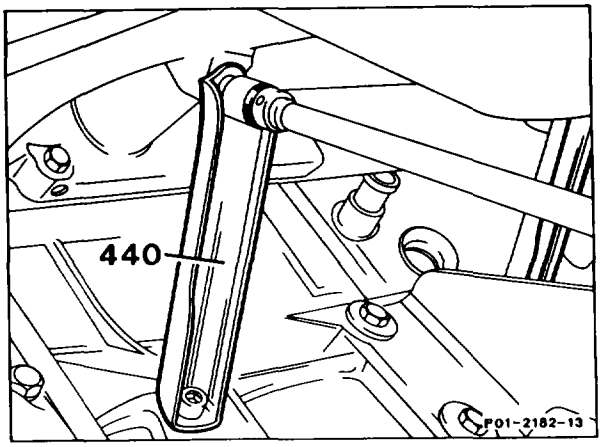

7 Slacken hose clips (arrow) at coolant hose to coolant pump.

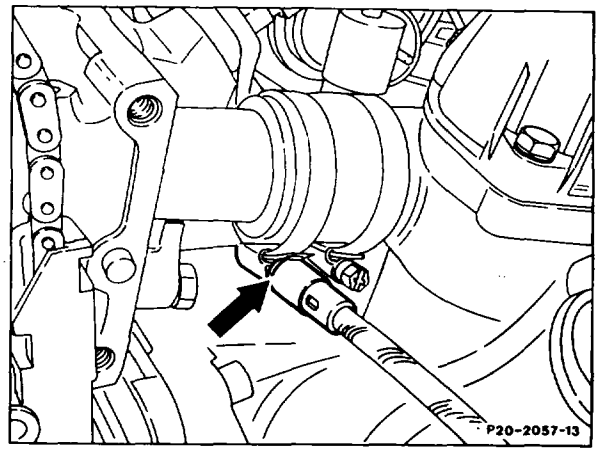

8 Slacken hose clip (235). Detach heating water return line (236).

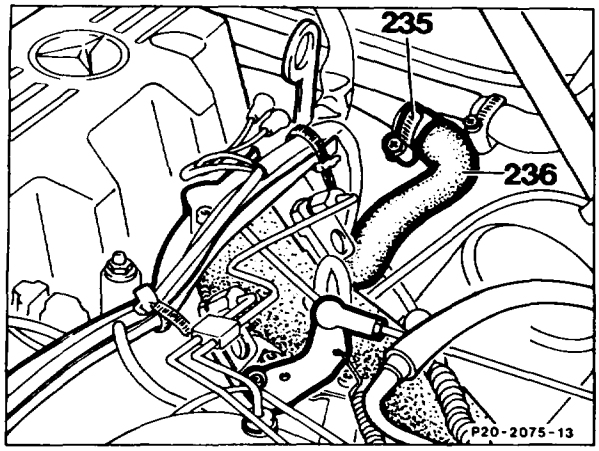

9 If automatic transmission fitted: unscrew bolt (516).

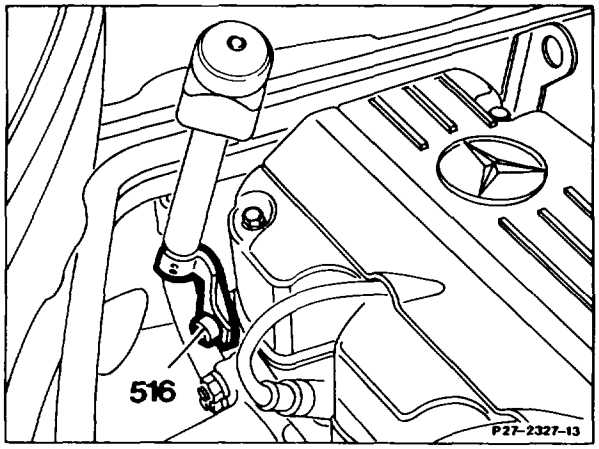

10 Briefly open fuel filler cap to release pressure in the fuel tank.
Unscrew fuel lines (379, 380).
Hold the connection fitting (arrow) to prevent it moving when slackening the fuel line (380).

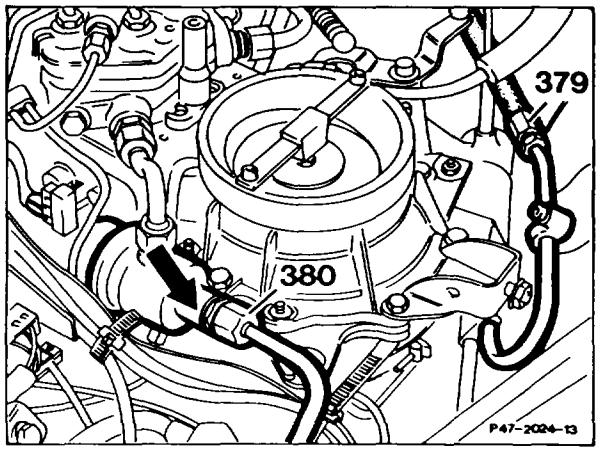

11 Models 124, 201: detach Bowden cable (accelerator control). Press plastic guide (517) out of its seat in the fulcrum lever (390) and withdraw Bowden cable (403) through the slot in fulcrum lever (390).
Compress the links of the plastic clip (518) and push plastic clip with Bowden cable (403) to the rear through the bracket.

Installation instruction
Adjust Bowden cable (403) (30–3250).

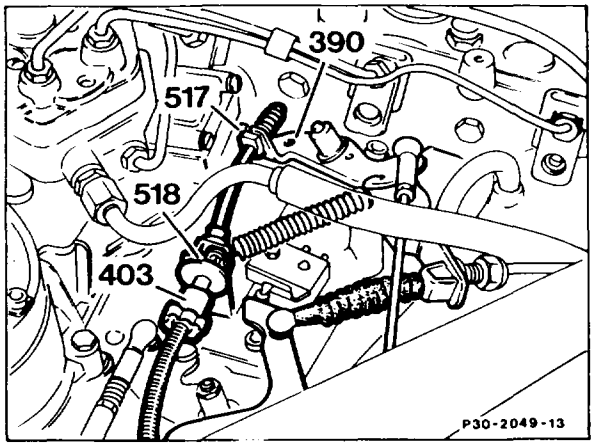

12 Detach control pressure cable (396). Compress links (519) of the plastic clip and guide plastic clip with linkage through the bracket.

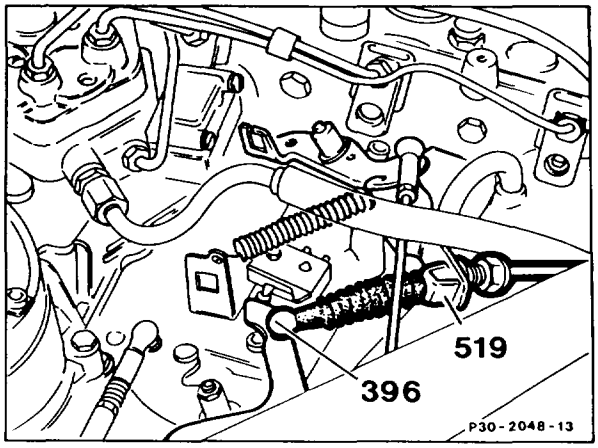

13 Models 107, 126: press off accelerator control linkage (arrows) and turn to the left and tie tight.

Shown on model 126

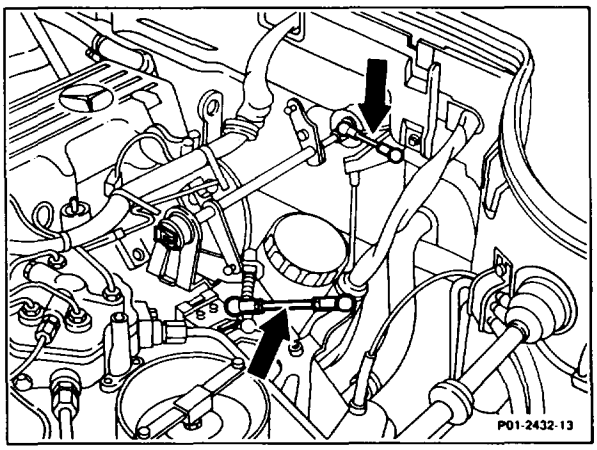

14 Take off clip (arrow) and withdraw accelerator control linkage shaft from the guide and take out to the front.

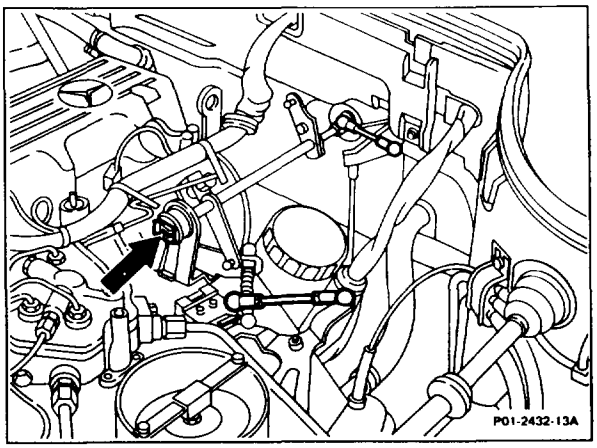

Shown on model 126

15 Detach engine wiring harness (39). Slacken all the cable straps of the engine wiring harness (39). Detach all the plug connections along the engine wiring harness (39).

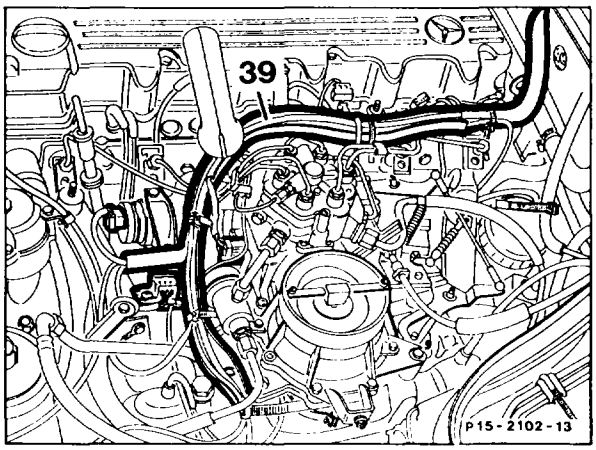

16 Detach control cable and vacuum line at the connector-sensor ignition control unit.

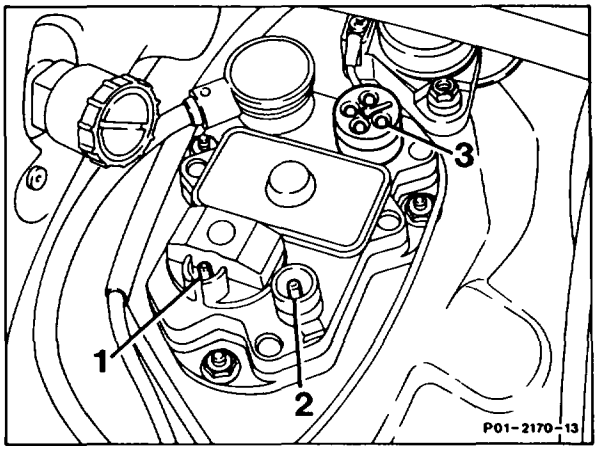

1 Vacuum connection
2 Control line-position sensor connection
3 Connector-sensor connection

17 Detach terminal block terminal TD (arrow) next to diagnostic socket (X11), unscrew diagnostic socket (X11), detach grey cable from the TDC sensor on the left side of diagnostic socket (X11).

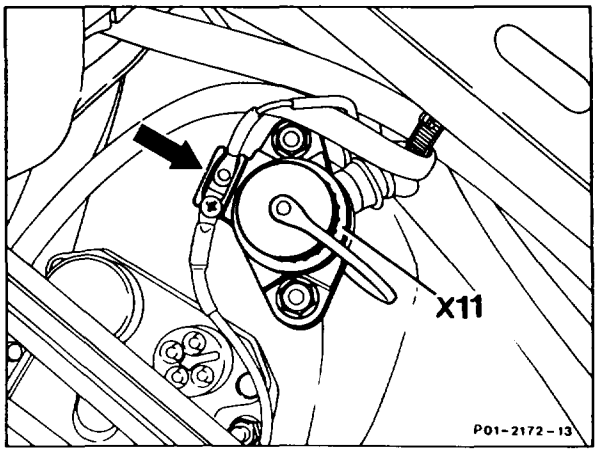

18 Unscrew bolts (arrows) for exhaust system at the flange of the exhaust manifold.

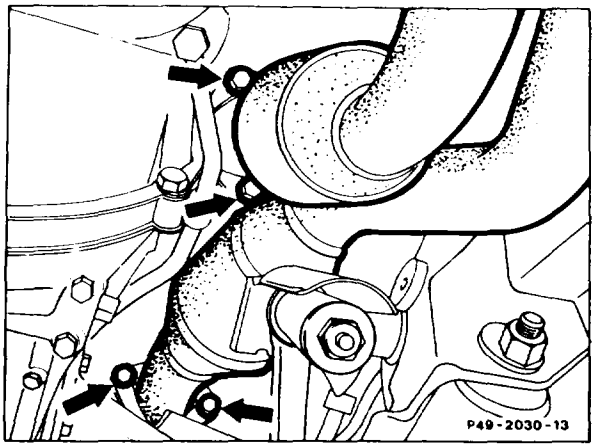

19 Slacken cylinder head bolts when engine cold in stages in the reverse order to the tightening diagram, starting with bolt 14.

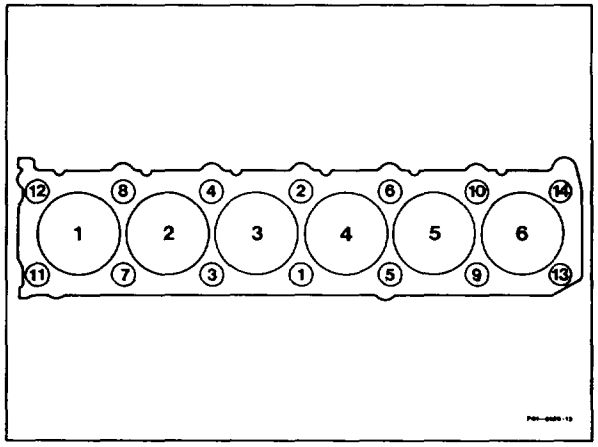

20 Attach engine hoist to the suspension lugs of the engine. Take off cylinder head.

21 Renew cylinder head gasket.

Installation instruction
Pay attention to the 2 dowel pins (609) for locating the cylinder head on the crankcase.

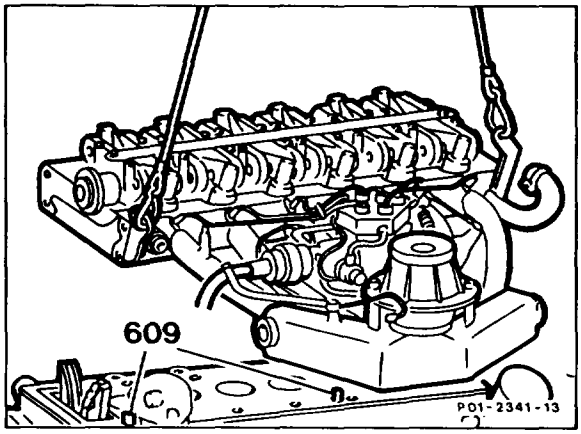

22 Turn crankshaft so that pin (22) or positioning bore of the camshaft is aligned with the marking (517) on the 1st camshaft bearing.

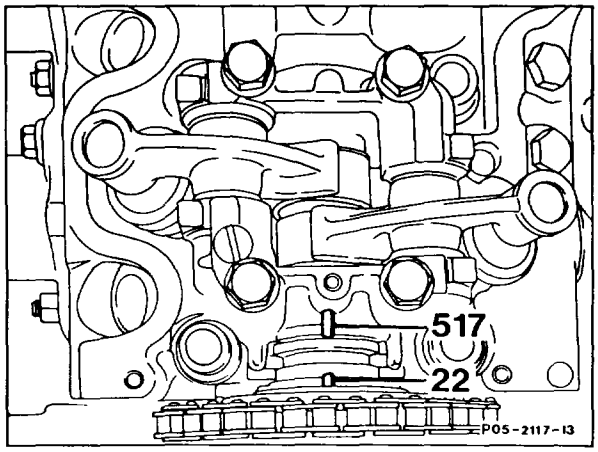

23 Position piston of cylinder 1 to TDC (arrow).

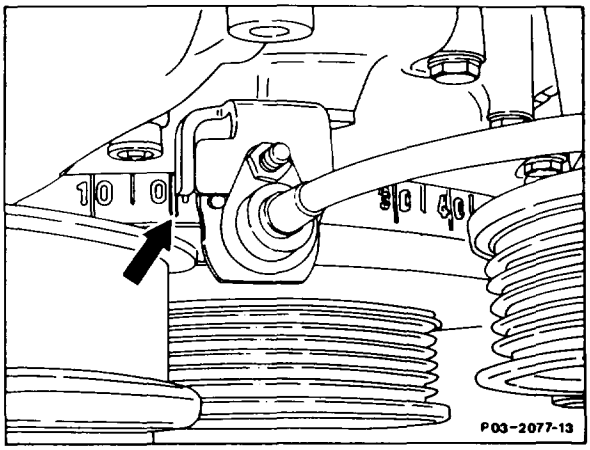

24 Clean threaded holes for cylinder head bolts in crankcase.

⚠
Free of oil and water

25 Check cylinder head bolts, tighten (01-4050).

Installation is performed in the reverse order.

26 Check cooling system for leaks (20-0170).

⚠
The cylinder head gasket is not watertight until the engine has reached normal operating temperature and the gasket has swollen. For this reason, do not pressure-test cooling system until the engine has reached operating temperature.

01–4180 Checking, facing cylinder head contact surface

Preceding work:
Valves removed.

Operation no. of operation texts and work units or standard texts and flat rates
01–7162

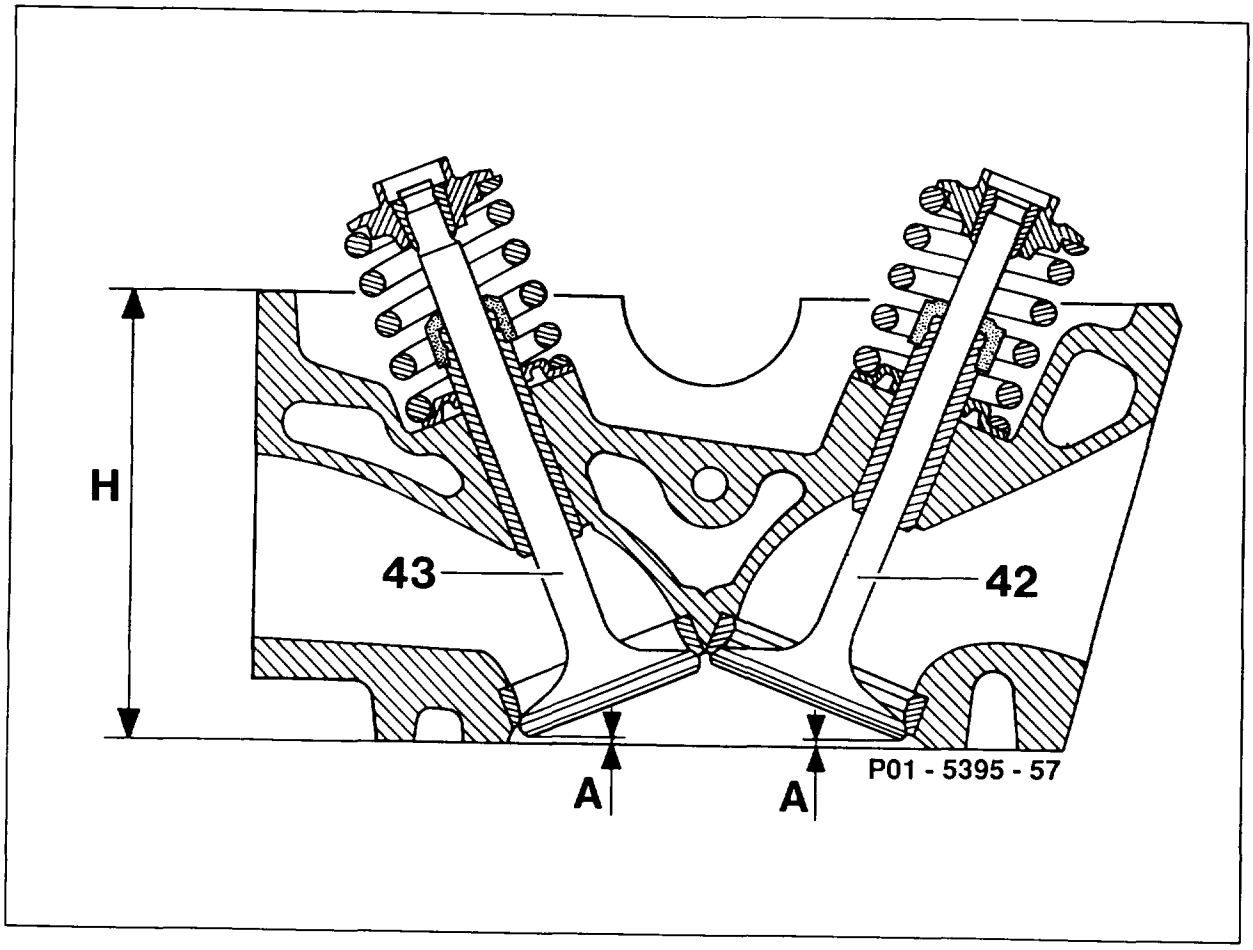

Reference size (H)	measure and note.
Cylinder head contact surface	face, pay attention to note.
Sharp edges on combustion chamber edge	slightly chamfer.
Reference size (H)	measure once again, determine stock removal.
Valve clearance (A) between valve retainer and cylinder head contact surface	measure.
Valve seats	machine up to minimum size (A) (05–2910).
Timing	check (05–2150).

Data

Overall height "H" of cylinder head		89.9 – 90.0
Minimum height after machining [1]		89.5
Permissible deviation from flatness of contact surface	in longitud. dir.	0.08
	in transverse dir.	0.0
Permissible deviation of parallelism of top to bottom contact surface in longitudinal direction		0.1
Peak-to-valley height		0.003 – 0.010

[1] The stock removal at the cylinder head and at the crankcase of an engine must together be not more than 0.5 mm (see 01–1200).

Commercially available tool

Surface grinding machine with grinding device for light-alloy surfaces

Note

Only machine cylinder head contact surface if porous or damaged points are found or if the measurement reveals an impermissible deviation of flatness in longitudinal direction of more than 0.2 mm.

⚠

The top cylinder head contact surface must not be machined otherwise the basic bores of the camshaft bearings will be altered.

If cracks are suspected (internal loss of coolant), the cylinder head must be pressure-tested.

01–4192 Servicing threads for camshaft bearing cap bolts

Preceding work:
Camshaft removed (05-2200).

Operation no. of operation texts and work units or standard texts and flat rates

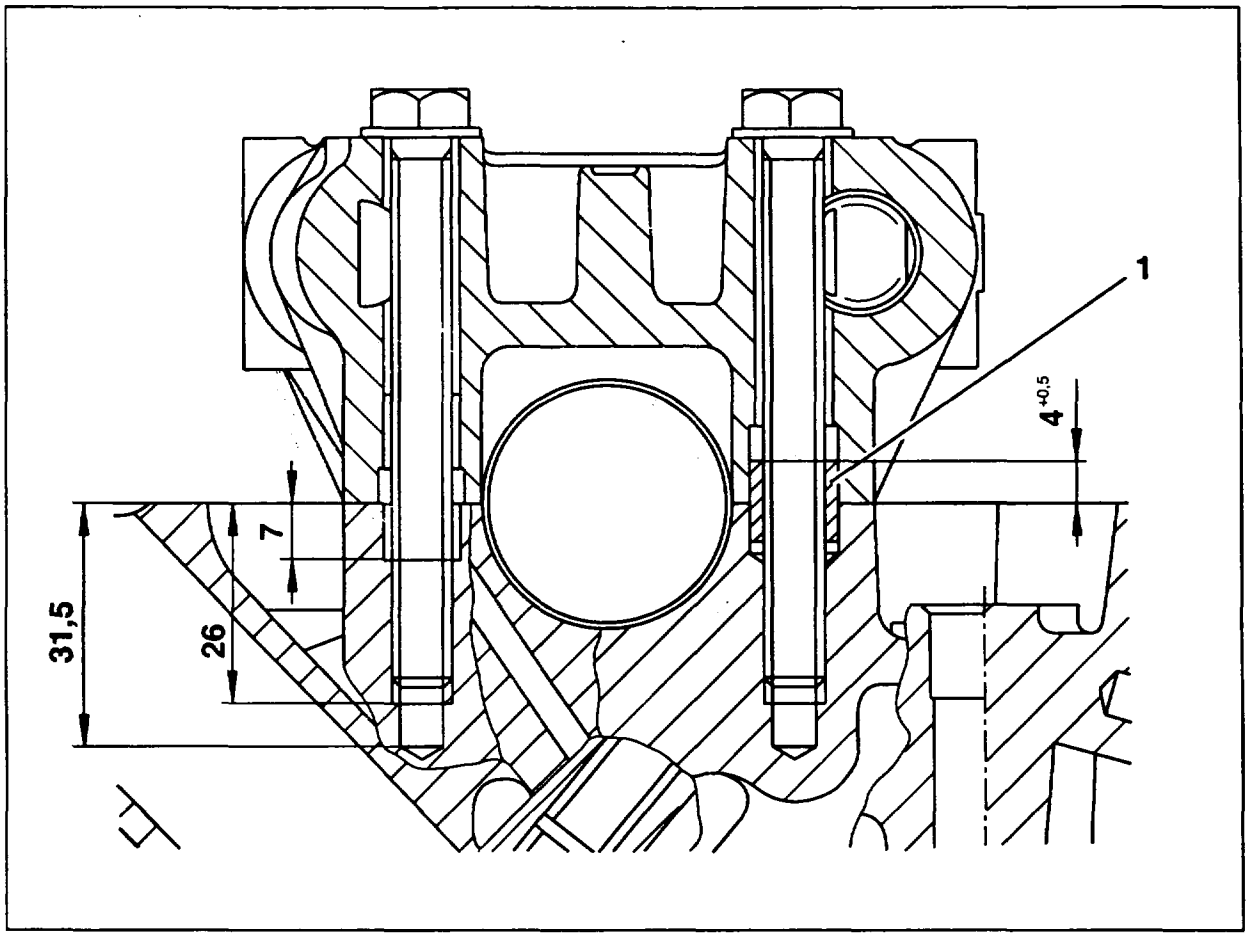

P01-6043-57

Dowel sleeves (1)	remove, install
Bore	widen, pay attention to drilling depth of core plug
HELI-COIL thread	tap
HELI-COIL threaded insert	screw in

Data in mm	
Twist drill ∅	8.4
Depth of core plug from contact surface	30
Threaded insert below contact surface	8
Length of thread screwed in	20

Commercially available tools

HELI-COIL M8 hand thread rough tap	eg.	Böllhoff GmbH Postfach 14 02 29 D–33622 Bielefeld Order no. 0140.108 0104
HELI-COIL M8 hand thread final tap	eg.	Böllhoff GmbH Postfach 14 02 29 D–33622 Bielefeld Order no. 0140.208 0102
HELI-COIL hand insertion tool	eg.	Böllhoff GmbH Postfach 14 02 29 D–33622 Bielefeld Order no. 0150.040 800
HELI-COIL M8 × 20 threaded insert	eg.	Böllhoff GmbH Postfach 14 02 29 D–33622 Bielefeld Order no. 0130.008 0020

01–4190 Widening camshaft bearing bores (repair size)

Inspection data in mm

		New	Wear limit
Camshaft bearing journal ∅	Standard size	30.93 – 30.95 mm	–
	Repair size	31.43 – 31.45 mm	–
Camshaft bearing bore ∅	Standard size	31.00 – 31.03 mm	–
	Repair size	31.50 – 31.53 mm	–
Camshaft bearing bores	Peak-to-valley height	0.003 – 0.006	–
	Permissible difference from cylinder shap	0.012	–
	Permissible misalinement of 1st bearing bore to 7th bearing bore	0.04	–
Permissible difference in concentricity of center bearing points and of camshaft gear seat when mounted in outer bearing points	Camshaft gear seat	0.025 mm	–
	Bearing points 2, 3, 4	0.030 mm	–
Camshaft bearing play	radial	0.05 – 0.09 mm	0.11 mm
	axial	0.03 – 0.11 mm	0.15 mm
Scleroscopic hardness of cams		70 – 82	63

Note

If bearing seizure or severe scoring exists, the camshaft bearing bores may be widened by 0.5 mm and a camshaft with oversized bearing journals installed.

Note

Code number of this camshaft, see (05–2150).
Install numbered camshaft bearing caps each with two dowel sleeves and tighten to 15 Nm.
Bore camshaft bearing bores.

Do not widen half-bore on rear of cylinder head.
for mounting cylinder head cover gasket.

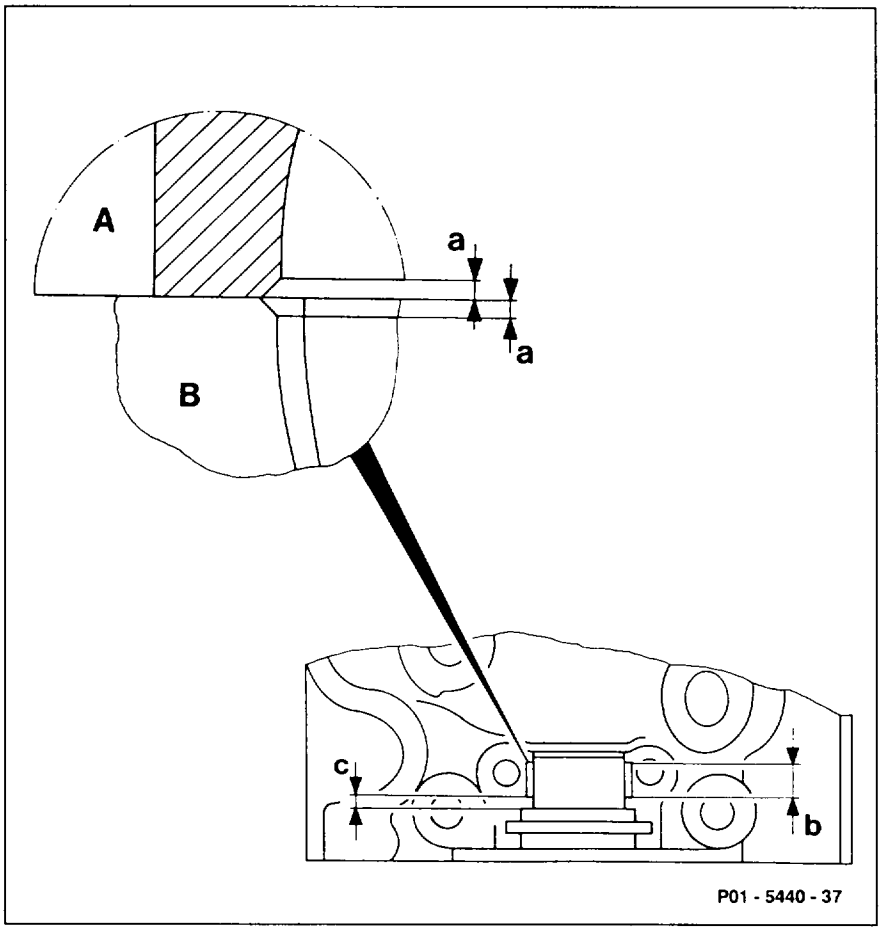

A	Camshaft bearing cap
B	Cylinder head
a	0.32 mm
b	12 mm
c	3 mm

After widening the bearing bores, the oil pockets on the contact surface between camshaft bearing bracket and cylinder head at the camshaft bearings must be machined to the dimensions (a), (b) and (c) otherwise the lubrication film will shear off.

01–4300 Cleaning, sealing oil longitudinal gallery in cylinder head

Preceding work:
Cylinder head removed (01-4150).
Camshaft removed (05-2200).
Oil nozzle return lock removed (18-4150).

Operation no. of operation texts and work units or standard texts and flat rates

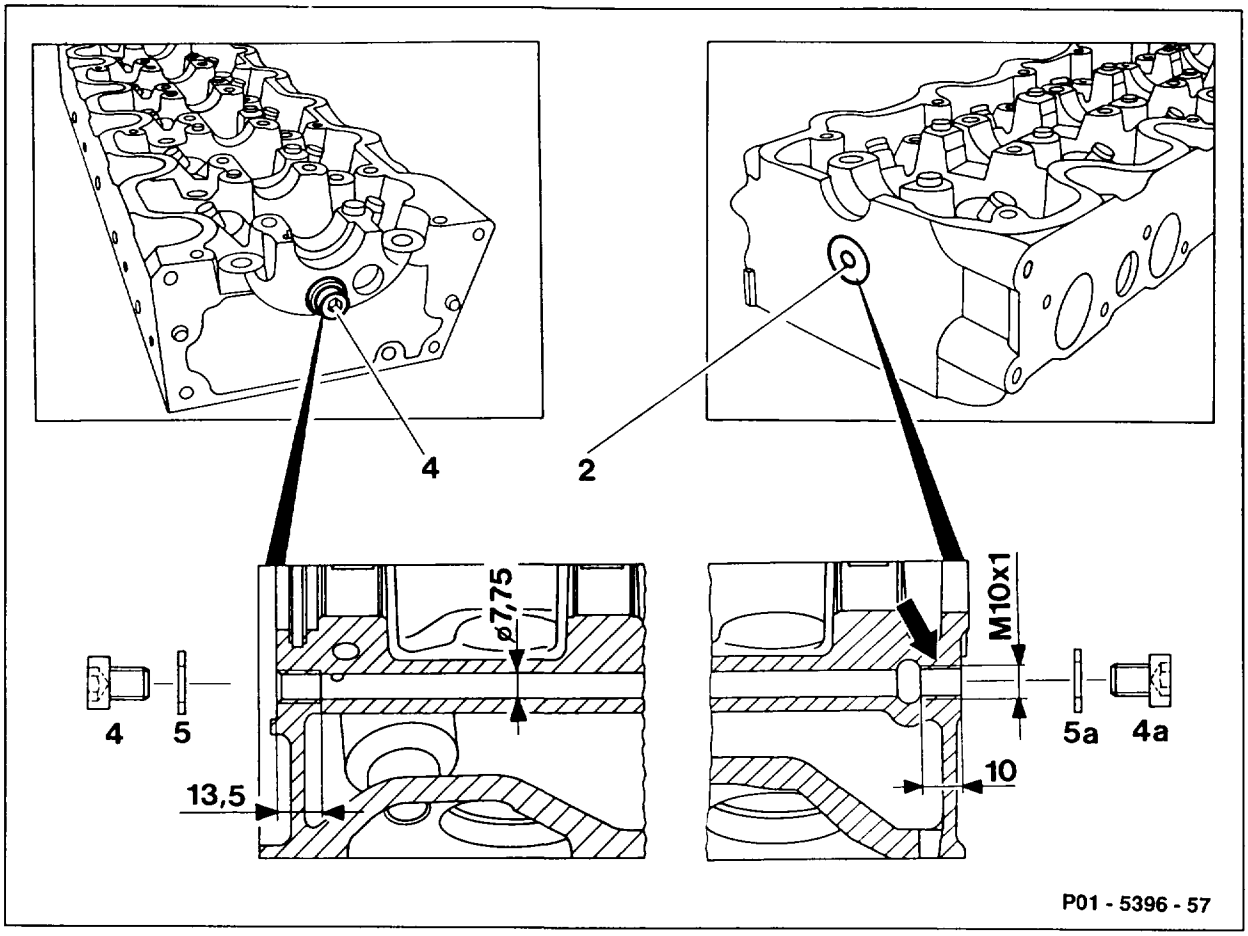

Screw plug at front (4) with seal (5)	unscrew, screw on (15 Nm).
Bar approx. 6 dia. ×700 mm	insert at front.
Steel ball (2)	knock out.
Oil gallery at rear (arrow)	widen dia. 9×10 mm deep.
M10×1 thread	tap into oil longitudinal gallery at rear
Oil longitudinal gallery and all holes	carefully clean.
Screw plug at rear (4)	screw in part no. 000 908 01 00 04 and seal (5) part no. 007 603 01 01 03 (15 Nm)

01–4200 Pressure-testing cylinder head

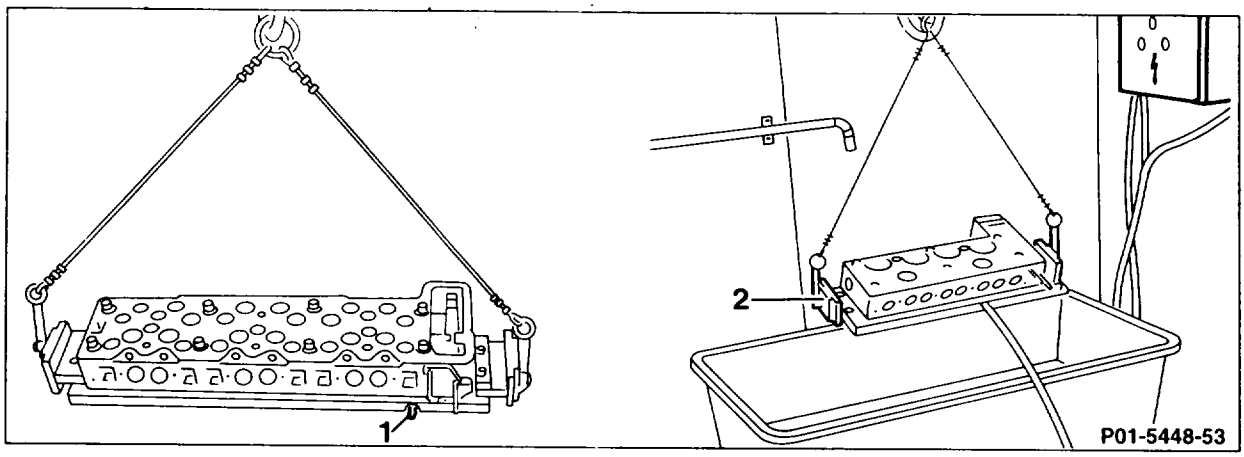

Cleaned cylinder head	fit onto pressure-testing plate (1).
Coolant passages at front and rear	seal.
Compressed air hose	connect.
Cylinder head	pressurize, (2 bar).
Cylinder head	attach to lifting device (2).
Cylinder head	immerse in tank of water heated to 80 °C.
If air bubbles rise up	determine leak points, mark.

Special tools

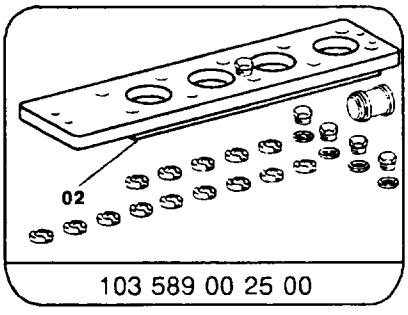

103 589 00 25 00

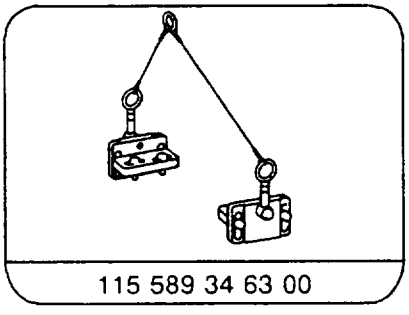

115 589 34 63 00

Commercially available tool

Electrically heated water tank	eg.	Edelstahlbau Hessenthal GmbH D–74532 Schwäbisch Hall

03–1800 Removing and installing crankshaft

Preceding work:
Engine removed (01–0300).
Oil pump removed (18–2100).
End cover removed (01–2220).
Tensioning rail removed (05–3300).
Guide rail removed (05–3350).

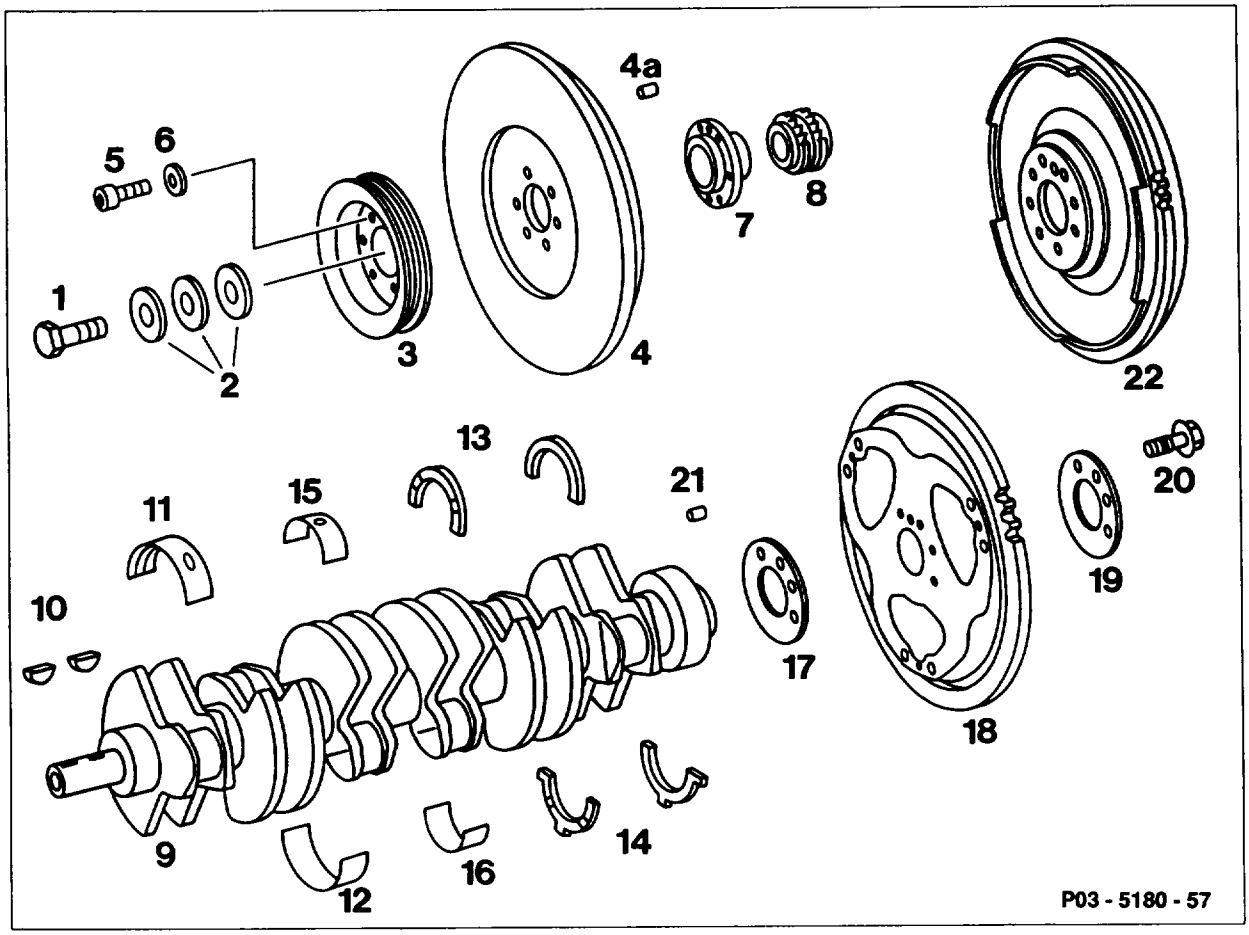

1	M18 × 1.5 × 45 mm bolt	14	Thrust washers, bearing cap 5
2	Dished washers (3 ea.)	15	Conrod bearing shell in conrod
3	Belt pulley	16	Conrod bearing shell in conrod bearing cap
4	Vibration damper	17	2.6 mm thick washer (glued on, automatic transmission)
4a	Straight pin		
5	M8 × 18 screw	18	Driven plate with ring gear (riveted, automatic transmission)
6	8.4 washer		
7	Hub	19	3.5 mm thick washer (automatic transmission)
8	Crankshaft gear	20	Stretch bolt for driven plates or flywheel
9	Crankshaft		M10 × 1 × 22 (8 ea.)
10	Woodruff key		M10 × 1 × 57 (8 ea., two-mass flywheel)
11	Crankshaft bearing shell in crankcase	21	Locating pin
12	Crankshaft bearing shell in bearing cap	22	Flywheel (manual transmission)
13	Crankcase thrust washers, bearing point 5		

Special tools

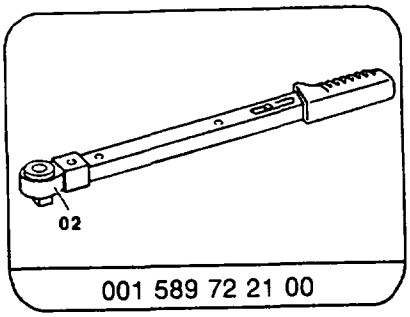

001 589 72 21 00

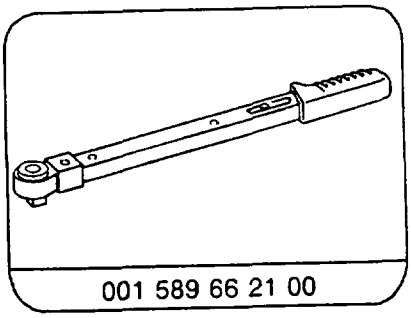

001 589 66 21 00

Note

The 7 crankshaft bearing caps are fitted into the side of the crankcase (arrows).
The fit is off-centered so that the bearing caps can only be installed in one position.

The crankshaft bearing caps are machined together with the crankcase.

If bearing damage has occurred, the conrods must be removed and any chips which exist remove from the conrod bores and from the crankshaft and crankcase oil galleries.

Replace oil filter, oil cooler and oil pump, clean oil nozzle return flow lock in cylinder head.

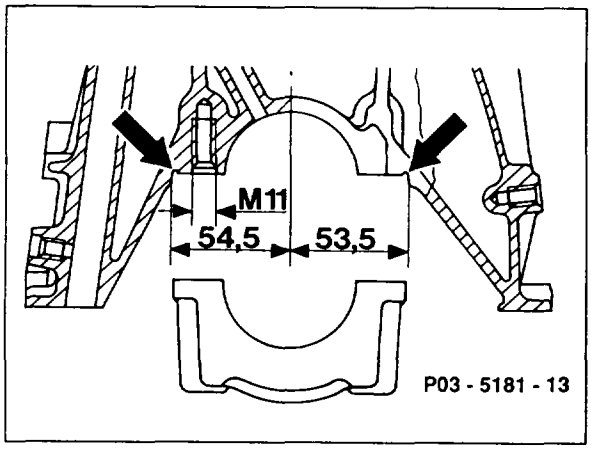

The forged conrods are guided axially in the pistons (piston-guided conrod) (arrows).

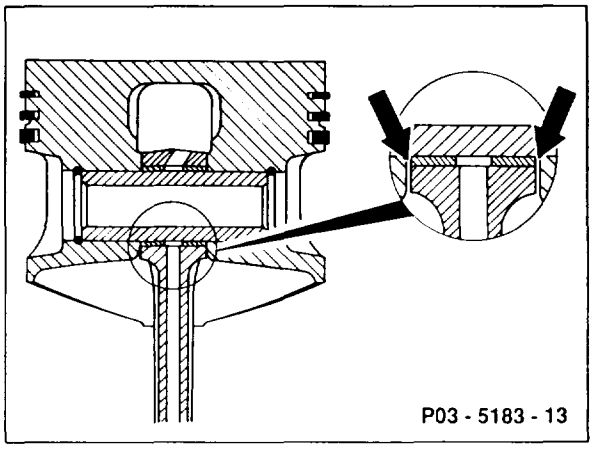

Test data

Crankshaft bearing play	radial	0.035 – 0.045
	axial	0.10 – 0.20
Conrod bearing play	radial	0.02 – 0.04

Removal, installation

1 Engine 103.984: remove oil deflector plate.

2 Unscrew conrod bearing caps, remove.

3 Unscrew crankshaft bearing caps, remove.

4 Remove crankshaft, install.

5 Install crankshaft bearing caps.

Note
The crankshaft bearing shells in the crankcase have an oil groove and an oil feed drilling.

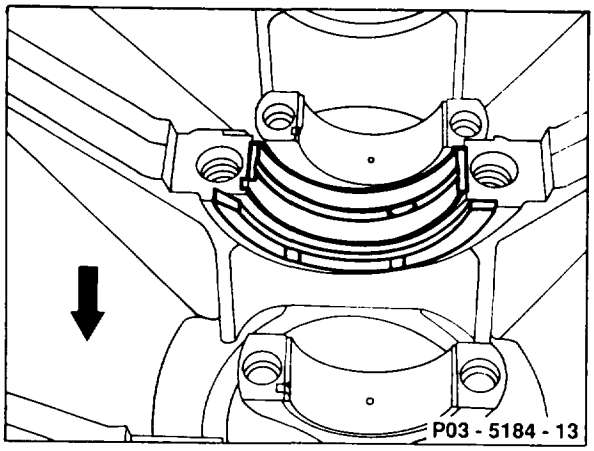

6 Install axial bearing in crankshaft bearing point 5.

Note
The thrust washers in the bearing cap each have two retaining lugs as an anti-twist lock.
The oil grooves (arrows) in the thrust washers must face toward the crankshaft thrust sides.

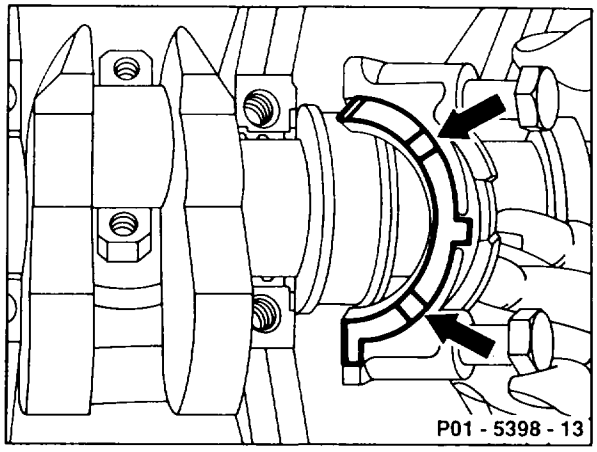

7 Oil bolt thread and bolt head contact surface.

8 Tighten bolts from inside to outside.
Initial torque 55 Nm.
Angle of rotation torque 90 – 100°.

9 Coat conrod bearing shells with engine oil and install bearing caps.

⚠
Pay attention to identification (arrow).
Install the bearing shells with oil drilling in the conrod otherwise the conrod bush will not be lubricated.

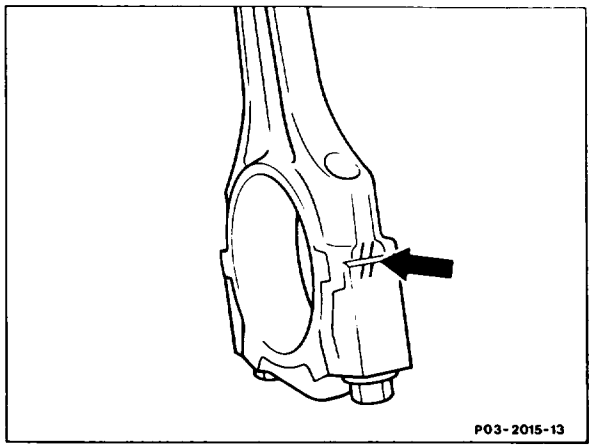

10 Tighten conrod bolts (03-3100).

11 Rotate crankshaft, check clearance.

03–3100 Checking, replacing and tightening conrod bolts

Operation no. of operation texts and work units or standard texts and flat rates
03–4341, 03–4351

Stretch shaft bolt (1st version)	
Part no.	102 038 00 71
Thread dia. (d)	M9 × 1
Stretch shaft dia. (c) when new	7.4 – 0.1
Minimum stretch shaft dia. (c)	7.1
Length (L) when new	52 – 0.3

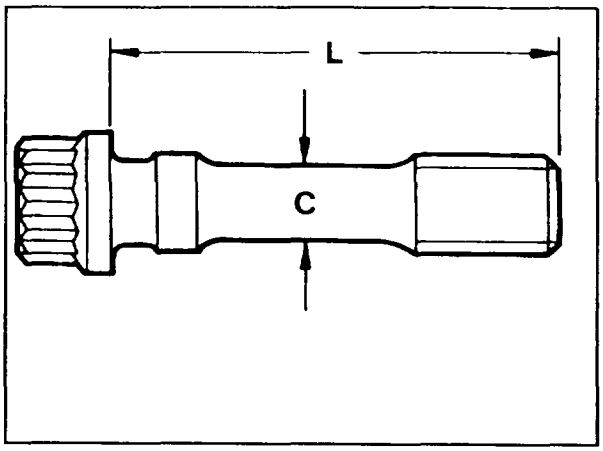

P03-0100-13

Tightening torque in Nm

Stretch shaft bolt	Initial tightening torque [2]	30
	Angle of rotation torque	90 – 100°

[2] Thread and contact surface of bolt head moistened with engine oil before fitting.

Flow shaft bolt (2nd version)	
Part no.	102 038 02 71
Thread dia. (d)	M9 × 1
Shaft dia. (c) when new	8.7 – 0.2
Minimum shaft dia. (c)	8.2
Length (L) when new	52 – 0.3 [1]

[1] Re-use conrod bolt up to max. 52.9 mm.

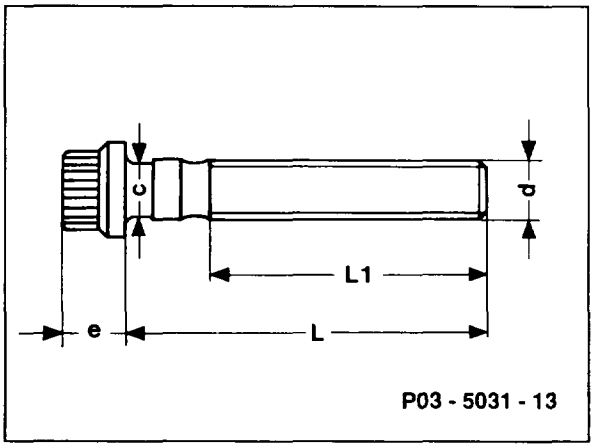

P03 - 5031 - 13

Tightening torque in Nm

Flow shaft bolt	Initial tightening torque [2]	30 (40) [5]
	Angle of rotation torque	90 – 100°

[2] Thread and contact surface of head of bolt moistened with engine oil before fitting.
[5] For initial tightening.

Flow shaft bolt (3rd version)	
Part no.	111 038 00 71
Thread Ø	M9×1
Length (L) when new	52 – 0.3 [1]

[1] Re-use conrod bolt up to max. 52.9 mm

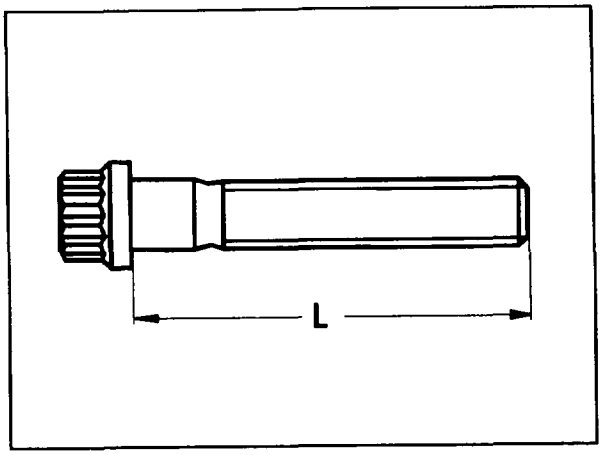

P03-5270-13

Tightening torque in Nm

Flow shaft bolt	Initial tightening torque [2]	35 (45) [5]
	Angle of rotation torque	90 – 100°

[2] Thread and contact surface of head of bolt moistened with engine oil before fitting.
[5] For initial tightening.

Conrod bolts	re-use up to minimum stretch shaft dia. or up to max. flow shaft length.
Different weight	note (see note).
Thread and bolt head contact surface	oil before fitting.
Conrod bolts	tighten initially with torque wrench 001 589 66 21 00.
Conrod bolts	tighten with angle of rotation wrench. Pay attention to note.

Special tool

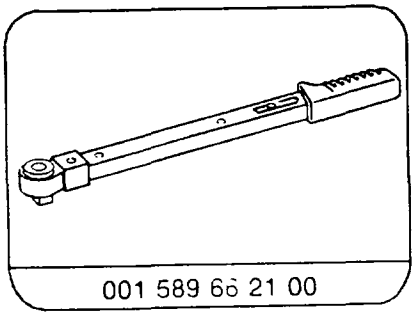

Note
The conrod bolts of the three versions have different weights. Only the same conrod bolts may be installed in an engine.

If no angle of rotation torque wrench is available, the conrod bolt can be tightened further by the specified angle with a socket wrench and lever in a single operation. To eliminate angularity errors, do not use bending rod torque wrenches for tightening to angle of rotation torques.

03–3130 Servicing, alining and mounting conrod in bearings

Operation no. of operation texts and work units or standard texts and flat rates
03–6111

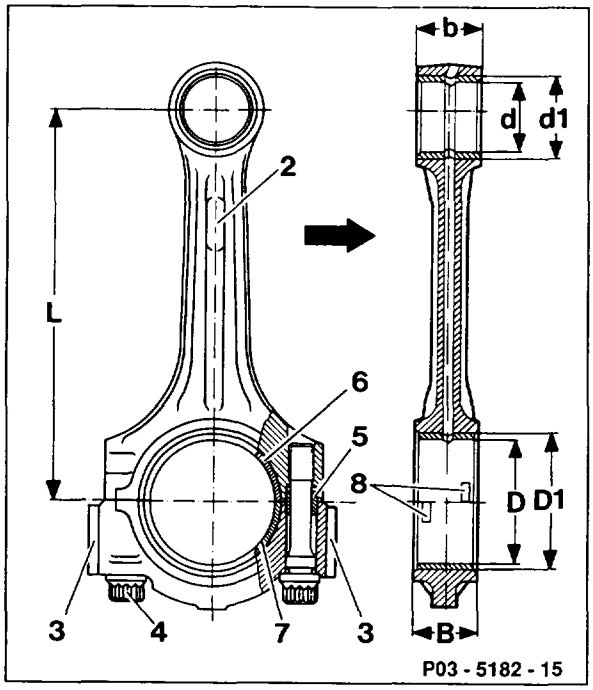

2	Marking	6	Top conrod bearing shell
3	Bottom balancing weight	7	Bottom conrod bearing shell
4	M9 × 1 conrod bolt	8	Bearing shell locating lugs
5	Dowel sleeve	Arrow	Direction of travel

Data

Center of conrod bearing bore to center of conrod bush bore (L)	144.995 – 145.005
Width of conrod at conrod bearing bore (B)	21.948 – 22.000
Width of conrod at conrod bush bore (b)	21.948 – 22.000
Conrod basic bore (D1)	51.600 – 51.609 [1)] 51.609 – 51.619 [2)]
Conrod bush basic bore (d1)	24.500 – 24.521
Conrod bush ID (d)	22.007 – 22.013
Piston pin play in conrod bush	0.013 – 0.018
Roughness of conrod bush on inside	0.005

Permissible twist of conrod bore to conrod bush bore	0.15
Permissible deviation of axial parallelism of conrod bearing bore to conrod bush bore	0.07
Permissible deviation of conrod bearing bore from concentricity	0.01
Permissible difference in weight of complete conrod within an engine	4 g

1) Marking on conrod cap: 1 chisel punch
2) Marking on conrod cap: 2 chisel punches

Crankshaft machining dimensions

Crankshaft	Size	Color code	Machining dimensions 1)
Conrod bearing journal	Standard	none	47.955 – 47.965
Ø at crankshaft	Standard 1	orange	47.945 – 47.955
	Standard 2	blue	47.935 – 47.945
	1st repair size	–	47.700 – 47.715
	2nd repair size	–	47.450 – 47.465
	3rd repair size	–	47.200 – 47.215
	4th repair size	–	46.950 – 46.965
Conrod bearing journal		Standard	27.958 – 28.042
width		Repair sizes up to	28.300

1) Machine the crankshaft so as to obtain the specified bearing play with the existing bearing shells.

Test data

Conrod bearing play	radial	0.02 – 0.04
	axial	Piston guided

Conrod bearing shells

Color code	red	yellow	blue
Wall thickness in mm			
Standard	1.806 – 1.810	1.810 – 1.814	1.814 – 1.818
Standard 1 [1])	1.811 – 1.815	1.815 – 1.819	1.819 – 1.823
Standard 2 [1])	1.816 – 1.820	1.820 – 1.824	1.824 – 1.828
1st repair size	–	1.935 – 1.999	–
2nd repair size	–	2.060 – 2.064	–
3rd repair size	–	2.185 – 2.189	–
4th repair size	–	2.310 – 2.314	–

[1]) Standard 1 and standard 2 wall thicknesses are not supplied as replacement parts.

Special tools

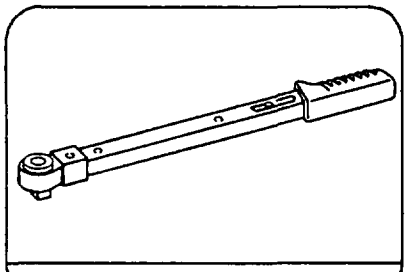

001 589 66 21 00

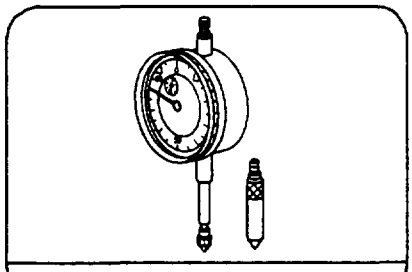

001 589 53 21 00

Commercially available tools

Conrod tester	eg.	Model BC 501 KWT D–63128 Dietzenbach
Conrod straightener	eg.	Model BC 503 KWT D–63128 Dietzenbach
Quick calipers for internal measurements Ø 20 – 40 mm Ø 40 – 60 mm		
Micrometer 0 – 25 mm 50 – 75 mm		

Notes

Conrod and conrod cap are marked together (arrow).

Conrods which have been overheated because of bearing damage (blue discolouration) must not be re-used.

The conrod shaft must not have any cross scores and notches.

Conrods are supplied with machined conrod bush as replacement parts.

The conrod and conrod cap are fixed together with dowel sleeves.

Pay attention to difference in weight of conrods when replacing.

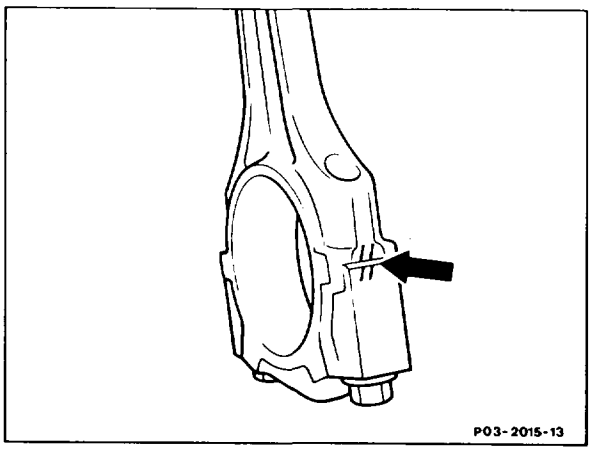

Repairing

1 Check conrod bolts, replace if necessary (03–3100).

2 Install conrod cap. To do this, oil thread and bolt head contact surface and tighten to 40 Nm.

3 Measure conrod bearing basic bore. If the basic bore exceeds a value of 51.619 mm or is conical, dress conrod cap at its contact surface to max. 0.02 mm. Machine conrod cap together with conrod.

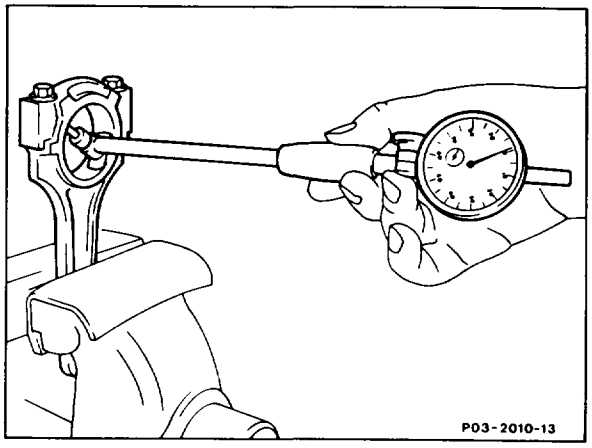

4 Press in new conrod bush so that the oil drillings are aligned (arrows).
Insertion pressure 2500 N.

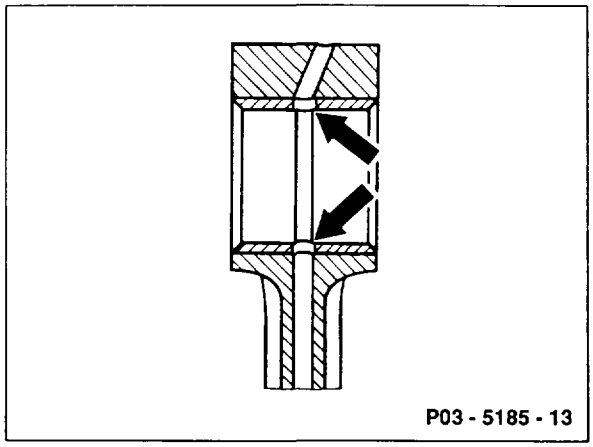

5 Turn or ream conrod bush.

6 Dress side contact surfaces of conrod on dressing plate.

Aligning

7 Check conrod with bearing shells and piston pins installed using conrod tester.

8 Align conrod with conrod straightening device.

9 Align parallelism of conrod bearing bore to conrod bush bore.

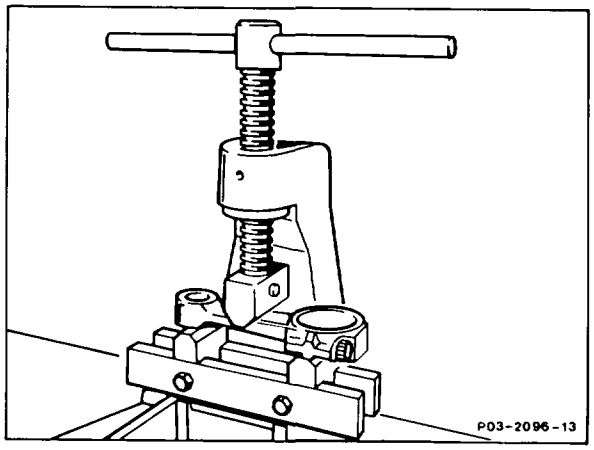

10 Align twist of conrod bearing bore to conrod bush bore.

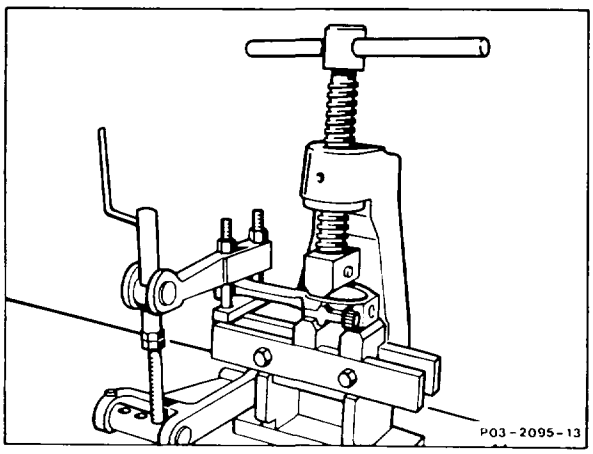

Mounting in bearings

11 Measure conrod basic bore, note.

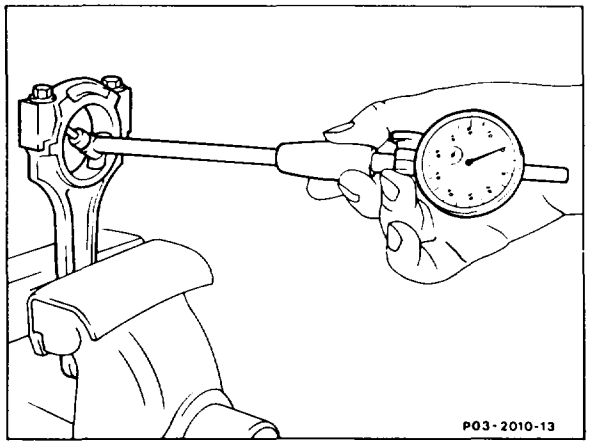

12 Measure conrod bearing journal Ø, note.

13 Calculate radial conrod bearing play.

14 Match conrod bearing shell.

15 Mount conrod on pistons (03-3160).

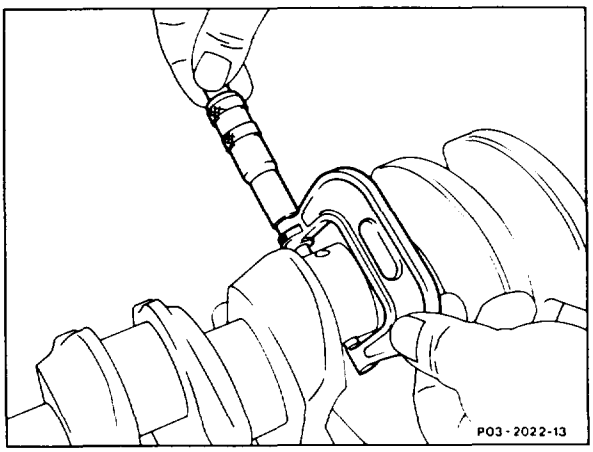

03–3160 Removing and installing pistons

Preceding work:
Engine removed (01–0300).
Cylinder head removed (01–4150).
Oil pump removed (18–2100).
Engine 103.984: oil shield plate removed (18–2180).

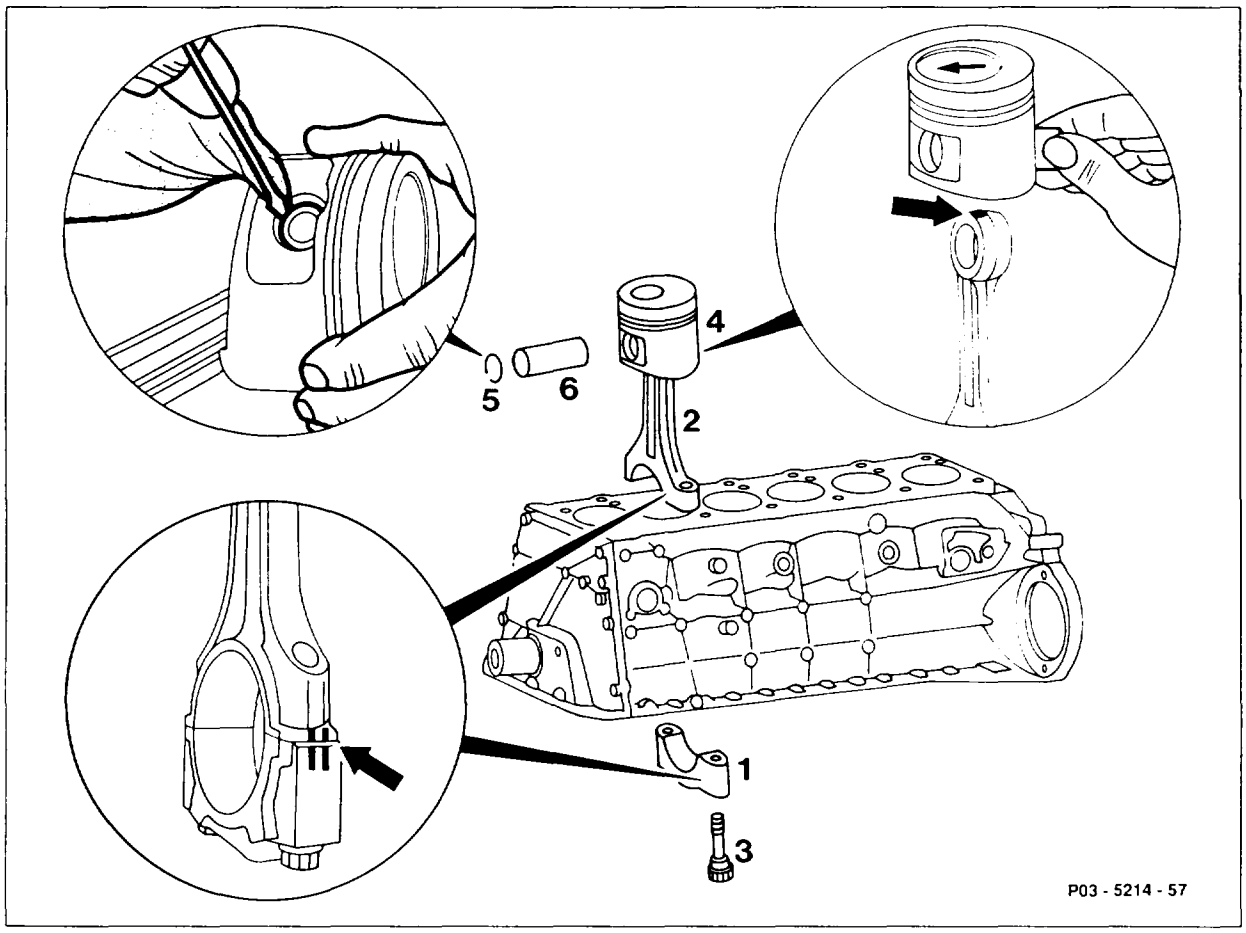

Removing pistons

Conrod bearing cap (1)	unscrew.
Conrod (2) and conrod bearing cap (1)	are marked together.
Conrod (2) with piston (4)	remove upward.

Detaching, attaching piston

Piston pin retainer (5)	press out with screwdriver.
⚠	
Clean rag	use as base.
Conrod	repair, align (03–3130).
Piston rings	check gap and end clearance (03–3170).

Piston pin (6) and conrod bushes . . . . . oil.

Piston (4) and conrod (2) . . . . . install together.

The angled spray hole in the small conrod bush (arrow) and the arrow in the piston crown must be facing in direction of . . . . . travel.

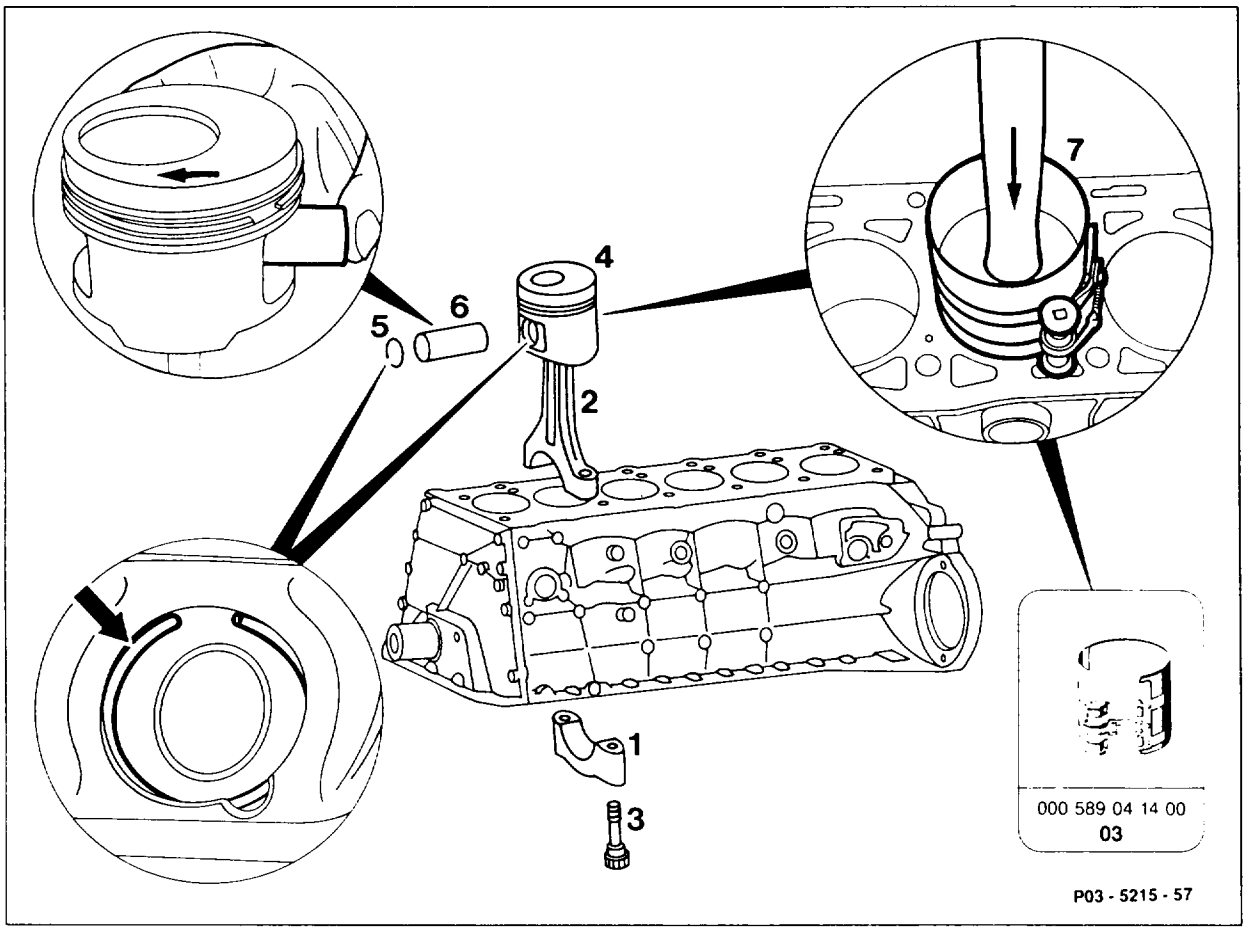

Piston pin (6) . . . . . press in by hand.

Piston pin retainer (5) . . . . . insert into groove (arrow).

Cleaned cylinder bores, conrod bearing journals, conrod bearing shells and piston (5) . . . . . oil.

⚠

Conrod bearing shell with oil drilling . . . . . install in conrod (2).

Installing piston

Tensioning strap (7) 000 589 04 14 00	
for piston rings	fit on, tension.
Piston (4)	install with arrow in direction of travel.
Conrod (2) and conrod bearing cap (1)	install with marking (arrow) to each other.
Conrod bolts (3)	check, tighten (03-3100).
Crankshaft	rotate, check clearance.

Data in mm

Piston projection [1]	0.72 – 0.92

[1] The piston projection for standard, repair size I and II is identical.

Special tools

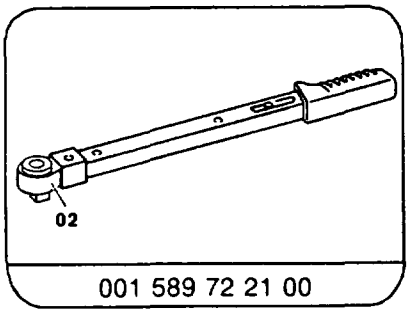

001 589 72 21 00

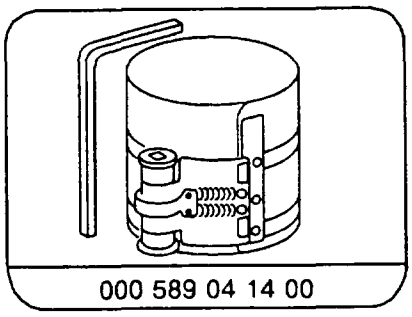

000 589 04 14 00

Note

⚠

Install new pistons with piston rings in used engines only if the cylinder bore does not show any abnormal wear, is within the dimensional tolerances for cylinder shape and concentricity and the honing is visible and undamaged.

Note

In the case of reconditioned engines, determine repair size (01-1100), then order pistons according to the valid parts documentation.

Pistons to counter increased oil consumption, production breakpoint: 12/1992

Engine number

103.984 10 001672

103.884 12 008781

103.985 12 022060

103.987 10 001240

103.987 12 003076

Notes
When performing repairs hone all the cylinder bores according to the dimensions of the existing pistons plus piston play, see "Measuring, drilling and honing cylinder bores" (01-1100).

Modified tolerance group marking on piston crown and on contact surface of crankcase. Production breakpoint 10/1988 and 11/1988.

1st version	2nd version
0	A
1	X
2	B

When performing repairs, the pistons with code letters (2nd version) or with numbers (1st version) can be installed in cylinder bores with **"standard size"** as follows.

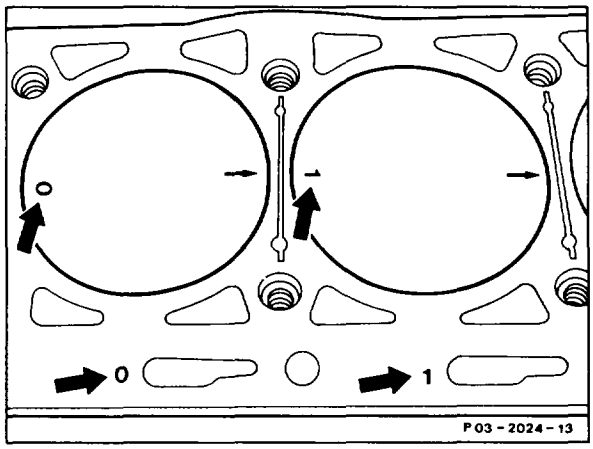

1st version, group numbers (arrows).

Cylinder identification	Piston identification
A	A, X or 0
X	A, X, B or 1
B	B, X, 1 or 2
0	A, X or 0
1	B, X or 1
2 [1]	B or 2

[1] State when ordering parts.

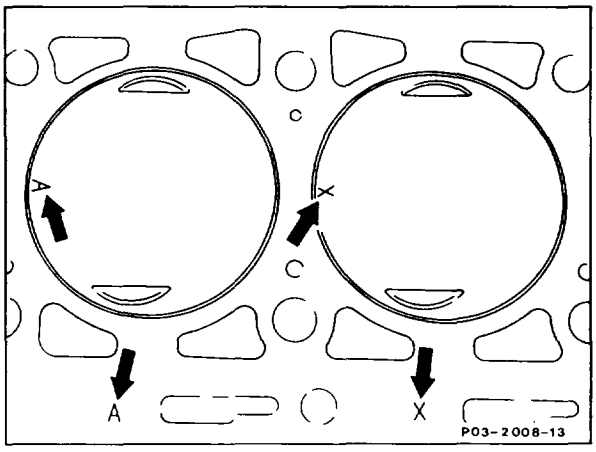

2nd version, group code letters (arrows).

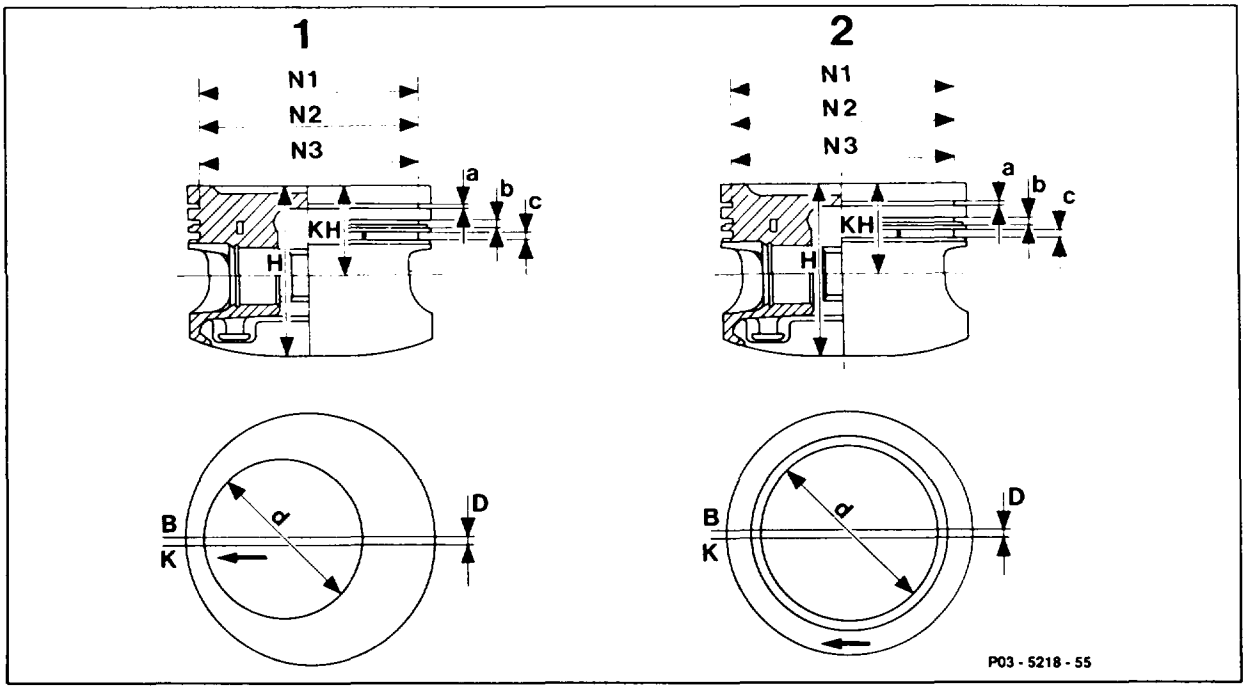

As of start of production up to engine no.			
103940 10 030013	103942 10 016504	1	Normal compression piston
103940 12 078549	103942 12 042925	2	Low compression piston
103941 10 004506	103943 10 000513	B	Middle of piston pin
103941 12 014837	103943 12 001206	K	Middle of piston

Data in mm

	Standard size	Repair size I	Repair size II
Piston dia.	82.900	83.400	83.900
Overall height (H)		63	
Compression height (KH)		33	
Piston ring groove 1 (a)		1.54 – 1.56	
Piston ring groove 2 (b)		1.76 – 1.77	
Piston ring groove 3 (c)		3.00 – 3.02	

Piston ring groove 1 Ø	74.5	75.0	75.5
Piston ring groove 2 Ø	74.5 74.0[1])	75.0 74.5[1])	75.5 75.0[1])
Piston ring groove 3 Ø	74.3 75.2[1])	74.8 75.7[1])	75.3 76.2[1])
Piston pin ID		13.5 13[1])	
Piston pin length		52	
Piston pin clearance in piston (matched)		0.004 – 0.008	
Piston pin roughness of grinding pattern (D)		1.2	
Bowl dia. (d)		53 66[1])	
Bowl depth (M)	1.0 3.2[1])	2.0 3.95[1])	2.4 4.25[1])
Valve recesses		–	
Compression ε		9.2 – 0.4 8.0[1])	

[1]) Low compression without catalytic converter

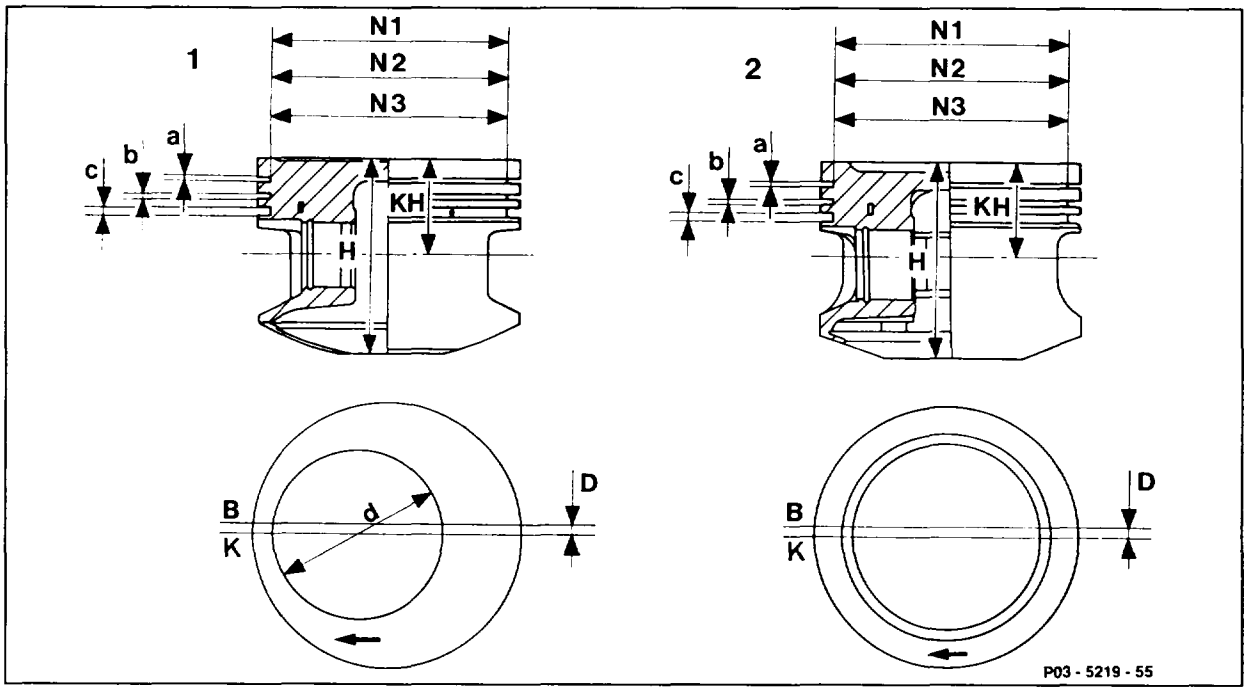

as of engine no.

103940 10 030014	103942 10 016505	1	Normal compression piston
103940 12 078550	103942 12 042926	2	Low compression piston
103941 10 004507	103943 10 000514	B	Middle of piston pin
103941 12 014838	103943 12 001207	K	Middle of piston

Data

	Standard size	Repair size I	Repair size II
Piston dia.	82.900	83.400	83.900
Overall height (H)		65 63[1])	
Compression height (KH)		33	
Piston ring groove 1 (a)		1.54 – 1.56	
Piston ring groove 2 (b)		1.76 – 1.77	
Piston ring groove 3 (c)		3.00 – 3.02	
Piston ring groove 1 Ø	74.0 74.5[1])	74.5 75.0[1])	75.0 75.5[1])
Piston ring groove 2 Ø	74.0 74.0[1])	74.5 74.5[1])	75.0 75.0[1])
Piston ring groove 3 Ø	74.3 75.2[1])	74.8 75.7[1])	75.3 76.2[1])
Piston pin ID		13.5 13[1])	
Piston pin length		52	
Piston pin clearance in piston (matched)		0.004 – 0.008	
Piston pin roughness of grinding pattern (D)		1.2	
Bowl dia. (d)		53 66[1])	
Bowl depth (M)	1.0 3.2[1])	2.0 4.0[1])	2.4 4.3[1])
Valve recesses		–	
Compression ε		9.2 – 0.4 8.0[1])	

[1]) Low compression without catalytic converter.

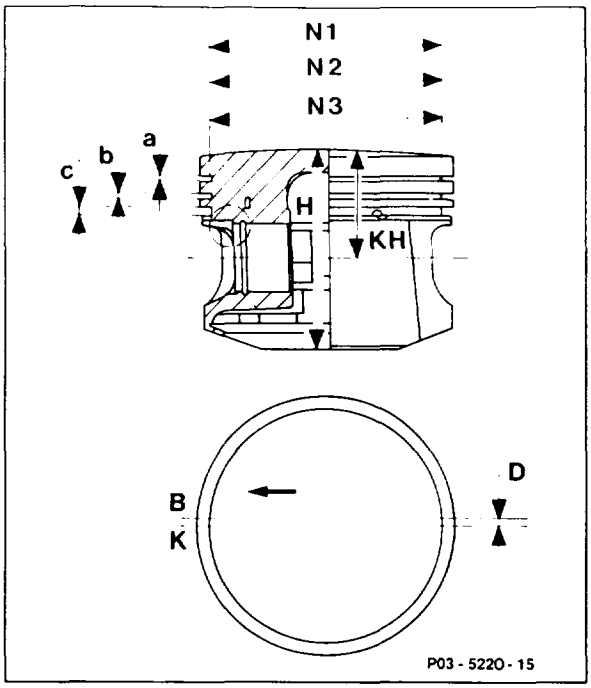

Pistons installed as of engine no.
103940 20 031532
103940 22 081081
103942 20 017475
103942 22 043383

B Middle of piston pin
K Middle of piston

Data

	Standard size	Repair size I	Repair size II
Piston dia.	82.900	83.400	83.900
Overall height (H)		64	
Compression height (KH)		33	
Piston ring groove 1 (a)		1.54 – 1.56	
Piston ring groove 2 (b)		1.76 – 1.77	
Piston ring groove 3 (c)		3.00 – 3.02	
Piston ring groove 1 Ø	74.5	75.0	75.5
Piston ring groove 2 Ø	74.0	74.5	75.0
Piston ring groove 3 Ø	75.2	75.7	76.2
Piston pin ID		13.5	
Piston pin length		52	

Piston pin clearance in piston (matched)	0.004 – 0.008
Piston pin roughness of grinding pattern (D)	1.2
Valve recesses	–
Compression ratio ε	9.2 – 0.4

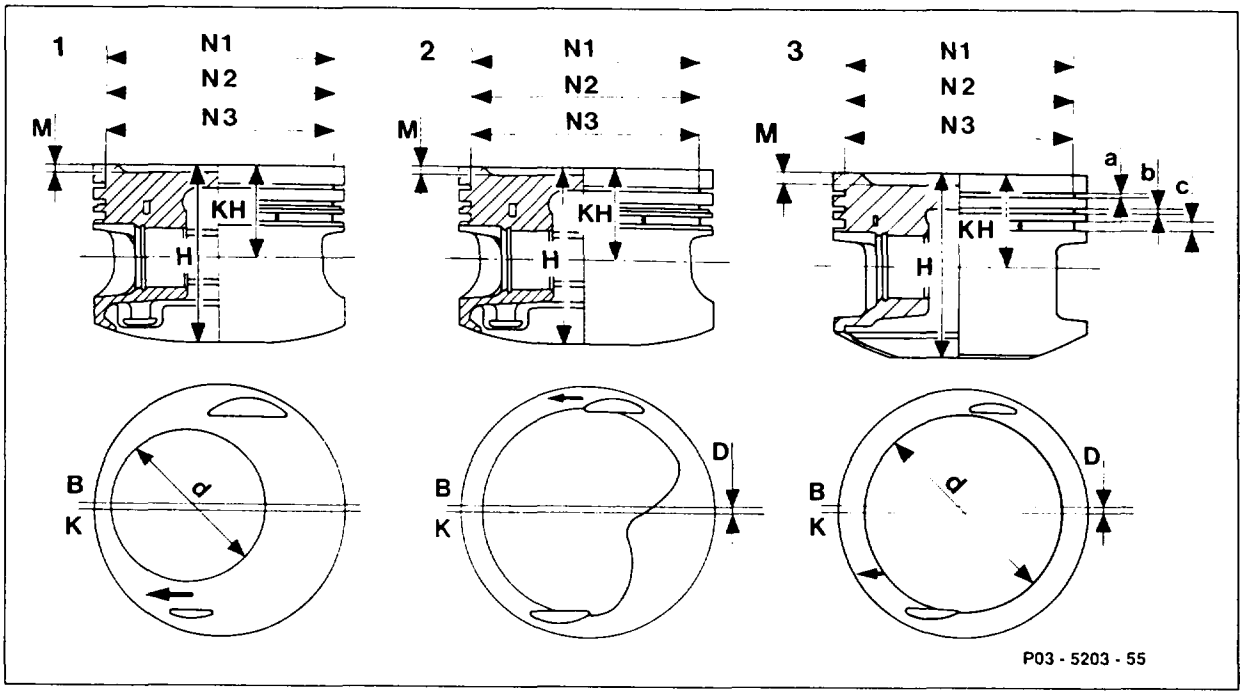

1 Piston engine 103.980
2 Piston engine 103.981/982/983
3 Piston low compression without catalytic converter

B Middle of piston pin
K Middle of piston

Data

	Standard size	Repair size I	Repair size II
Piston dia.	88.500	89.000	89.500
Overall height (H)		65 63[2])	
Compression height (KH)		33	
Piston ring groove 1 (a)		1.54 – 1.56	
Piston ring groove 2 (b)		1.76 – 1.77	
Piston ring groove 3 (c)		3.00 – 3.02	

Piston ring groove 1 Ø	79.6	80.1	80.6
Piston ring groove 2 Ø	79.6	80.1	80.6
Piston ring groove 3 Ø	79.7[1]) + [3]) 79.9[2])	80.2[1]) + [3]) 80.4[2])	80.7[1]) + [3])80.9[2])
Piston pin ID		13.5	
Piston pin length		52	
Piston pin clearance in piston (matched)		0.004 – 0.008	
Roughness of grinding pattern (D)		1.3[1]) 1.2[2]) 1.1[3])	
Bowl dia. (d)		55[1]) 70[3])	
Bowl depth (M)	1.3[1]) 2.7[2]) 5.3[3])	2.2[1]) 3.3[2]) 6.0[3])	2.55[1]) 3.6[2]) 6.35[3])
Valve recesses		2	
Compression ε		9.2 – 0.4 8.2[3])	

[1]) 103.980
[2]) Piston 103.981/982/983/985
[3]) Low compression without catalytic converter.

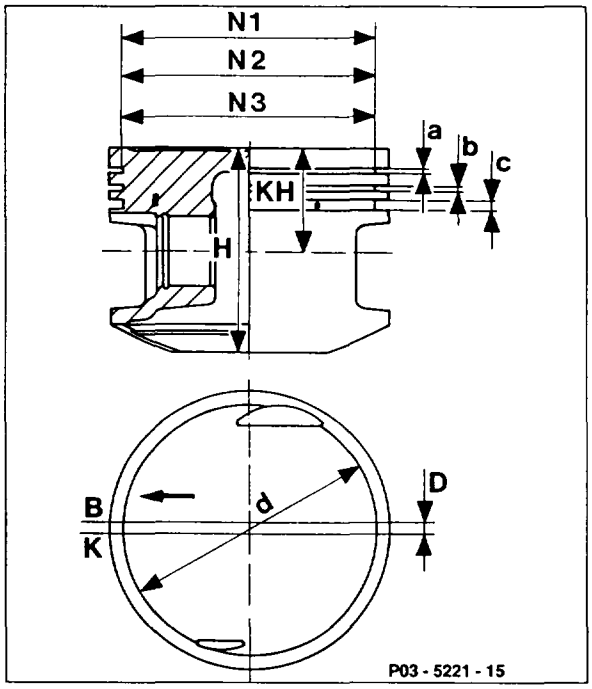

Piston engine 103.984/987
and as of engine no.
103983 20 037693
103983 22 198330

B Middle of piston pin
K Middle of piston

Data

	Standard size	Repair size I	Repair size II
Piston dia.	88.500	89.000	89.500
Overall height (H)		65	
Compression height (KH)		33	
Piston pin groove 1 (a)		1.54 – 1.56	
Piston pin groove 2 (b)		1.76 – 1.77	
Piston pin groove 3 (c)		3.00 – 3.02	
Piston pin groove 1 Ø	79.3	79.8	80.3
Piston pin groove 2 Ø	78.8	79.3	78.8
Piston pin groove 3 Ø	79.7	80.2	80.7
Piston pin ID		13.5	
Piston pin length		52	
Piston pin clearance in piston (matched)		0.004 – 0.008	
Roughness of grinding pattern (D)		1.3	
Bowl dia. (d)		78	
Valve recesses		2	
Compression ε		9.2 – 0.4	

03–3170 Replacing piston rings

Preceding work:
Piston removed (03–3160).

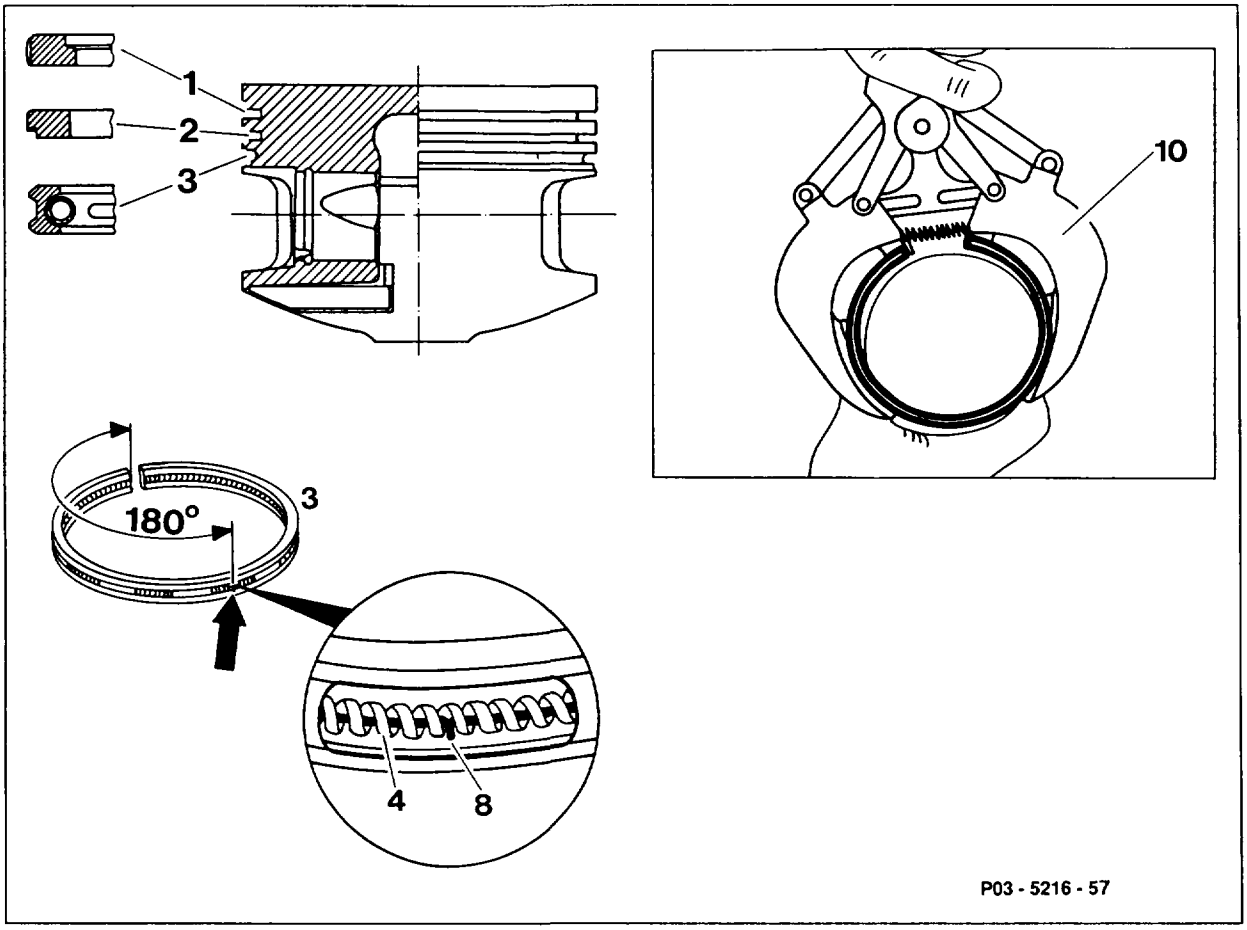

1 Rectangular ring, contact surface chrome-plated
2 Taper face ring, contact surface precision-turned
3 Bevelled ring with garter spring, contact surface chrome-plated

Gap and end clearance of piston rings	measure, see table.
Piston rings	remove with pliers (10) 000 589 51 37 00.
Width of piston rings	measure.
Piston ring grooves	clean
Oil drain bores in piston ring groove	clean
Piston rings only with identical ring width	install.
Installation position	note, "Top" faces up.
Hooked spring (8) in oil scraper ring (3)	install offset 180° to joint (arrow).

Special tool

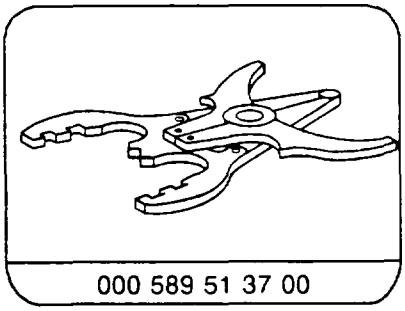

000 589 51 37 00

Test data

Gap clearance of piston rings	Groove 1	0.20 – 0.40
	Groove 2	0.20 – 0.40
	Groove 3	0.20 – 0.45
End clearance of piston rings	Groove 1	0.015 – 0.050
	Groove 2	0.020 – 0.040
	Groove 3	0.010 – 0.045

Note

When replacing piston rings, determine which rings are installed.

When performing repairs, fit pistons only with matching piston rings. Pay attention to piston ring Ø and height (03-3165).

03–3180 Checking and servicing crankshaft

Operation no. of operation texts and work units or standard texts and flat rates

Data in mm

Crankshaft standard size and repair sizes	Crankshaft bearing journal Ø	Conrod bearing journal Ø	Conrod bearing journal width
Standard size	57.950 57.965	47.955 47.965	27.958 28.042
Standard size I	57.935 57.950	47.935 47.955	
1st repair size	57.705 57.715	47.705 47.715	up to 28.30
2nd repair size	57.455 57.465	47.455 47.465	
3rd repair size	57.205 57.215	47.205 47.215	
4th repair size	56.955 56.965	46.955 46.965	

[1]) Crankshaft journal width except at fit bearing 23.95 – 24.04

Data in mm

Permissible out-of-roundness of crankshaft and conrod bearing journals		0.002
Permissible conicity	Conrod bearing journals	0.01
	Crankshaft bearing journals	0.01
Permissible axial runout of fit bearing		0.02
Fillet radii at the	Crankshaft bearing journals	1.9 – 2.1
	Conrod bearing journals	2.5 – 2.8
Bearing journals ground and precision-lapped, max. peak-to-valley height R_z (µm)		0.15
Front crankshaft journal Ø		31.98 – 32.00
Permissible difference in concentricity of front crankshaft journal [2]) [3])		0.03
Contact surface Ø for rear radial seal		92.874 – 92.928
Permissible difference of rear crankshaft flange	radial [2])	0.03
	axial [2])	0.012

[2]) When crankshaft mounted on crankshaft bearing journals 1 and 7 and one full revolution

[3]) If measurement performed with crankshaft installed, the radial bearing play should be eliminated by applying pressure to crankshaft bearing journal.

Permissible difference in concentricity of crankshaft bearing journals [2])	Journals 2, 6	0.07
	Journals 3, 4, 5	0.10
Scleroscopic hardness of crankshaft and conrod bearing journals	New	74 – 84
	Limit value	60 [4])
Permissible imbalance of crankshaft when mounted in journals 2 and 6		100 gmm [5])

[2]) When crankshaft mounted on crankshaft bearing journals 1 and 7 and one full revolution
[3]) If measurement performed with crankshaft installed, the radial bearing play should be eliminated by applying pressure to crankshaft bearing journal.
[4]) The limit value must exist at at least 2/3 of the circumference of the journal
5) Related to 1st and 12th balancing weight at 550 rpm

Note
Maximum wear limit of crankshaft and conrod bearing journals 0.02 mm. The repair sizes listed in the table should be adhered to exactly. When performing regrinding work, it is essential to adhere to the fillet radii at the crankshaft and conrod bearing journals. All the radii of the conrod and crankshaft bearings are inductively hardened at the boundary layer, except on crankshafts up to 08/1992 without radii hardening (identification with end number 0601 at 2nd throw of crankshaft) at 2nd, 3rd, 4th, 5th and 6th crankshaft bearings.
The contact surface for the rear radial seal is inductively hardened to a depth of about 1 – 2 mm.

Special tool

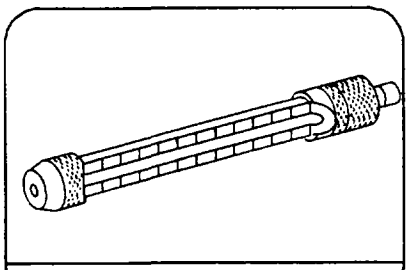

000 589 20 21 00

Note
Proceed in the order of the diagram overleaf when checking and servicing crankshafts.

A. Checking, grinding

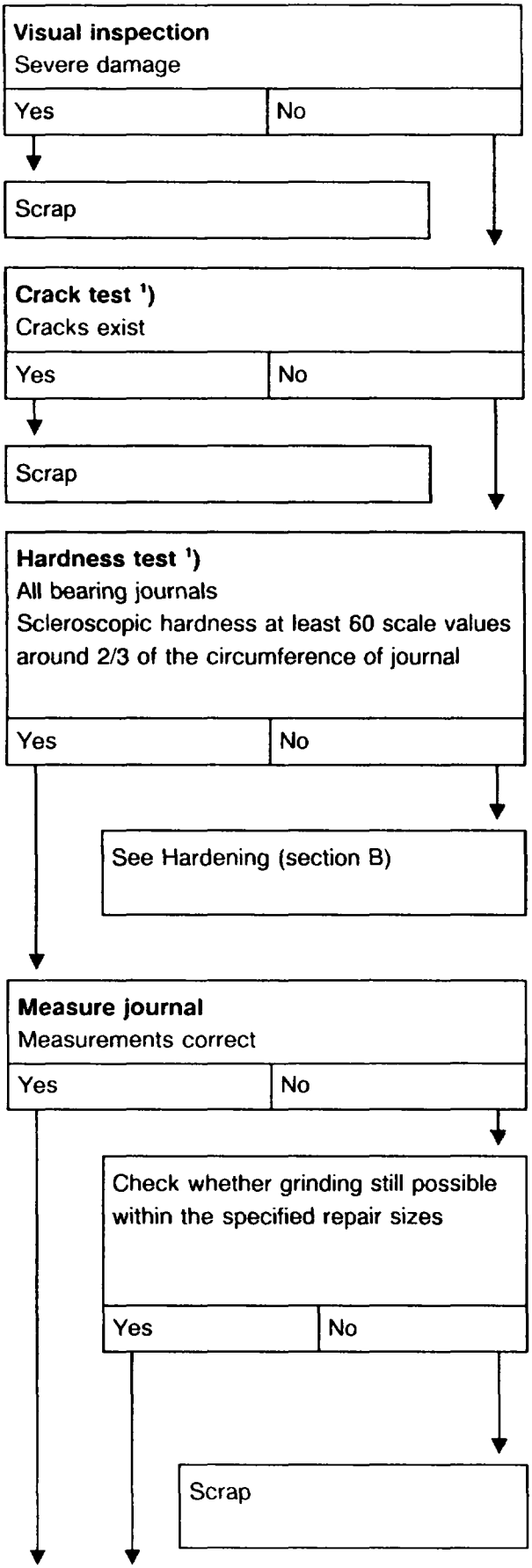

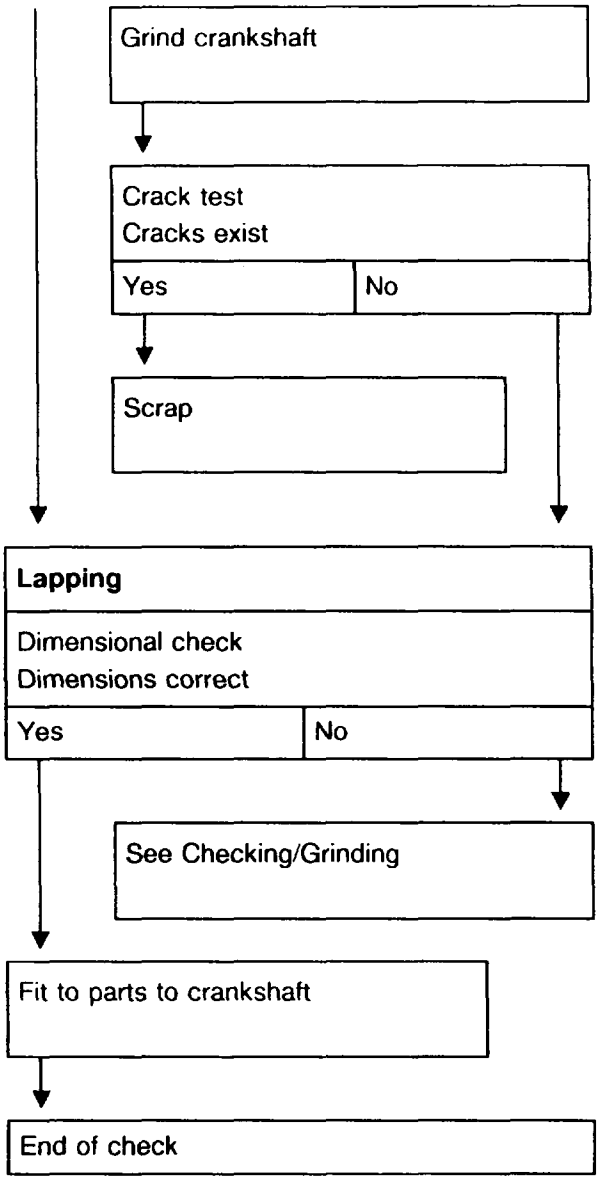
Grind crankshaft
Crack test
Cracks exist
Yes
No
Scrap
Lapping
Dimensional check
Dimensions correct
Yes
No
See Checking/Grinding
Fit to parts to crankshaft
End of check

B. Hardening

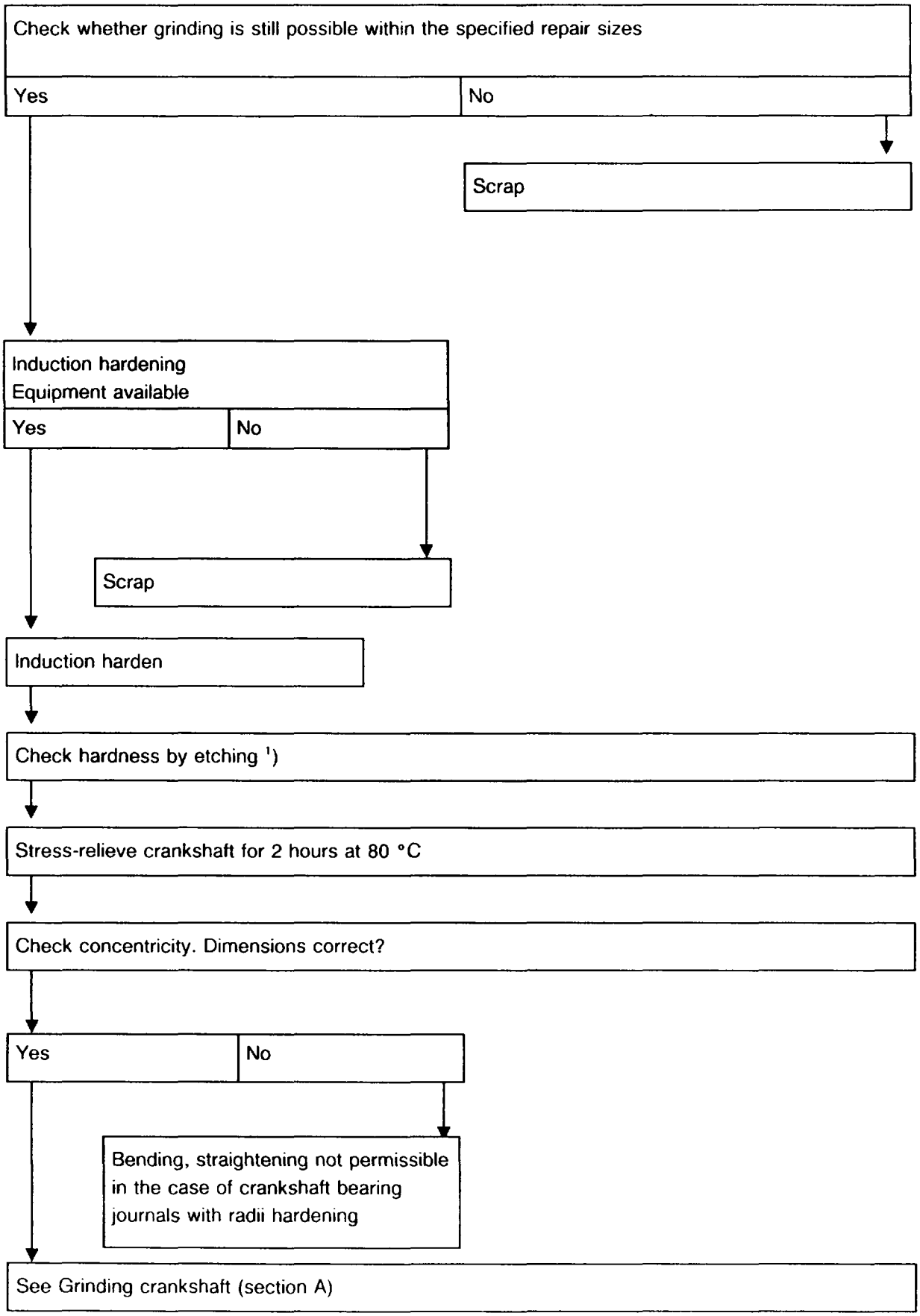
Check whether grinding is still possible within the specified repair sizes
Yes
No
Scrap
Induction hardening
Equipment available
Yes
No
Scrap
Induction harden
Check hardness by etching [1])
Stress-relieve crankshaft for 2 hours at 80 °C
Check concentricity. Dimensions correct?
Yes
No
Bending, straightening not permissible in the case of crankshaft bearing journals with radii hardening
See Grinding crankshaft (section A)

Explanations of diagram

Crack testing

Clean crankshaft. The bearing journals must be free of oil and grease. Magnetize crankshaft and apply fluorescent powder (flux). It is also possible to use a dye penetration method (immersing in bath or with a spray can).

Aids: dye, UV oil or fluorescent powder,
cleaner,
developer

Hardness test

Check hardness with drop-hardness tester (scleroscopic hardness). The minimum hardness of 60 scale values must exist around 2/3 of the circumference of the journal.

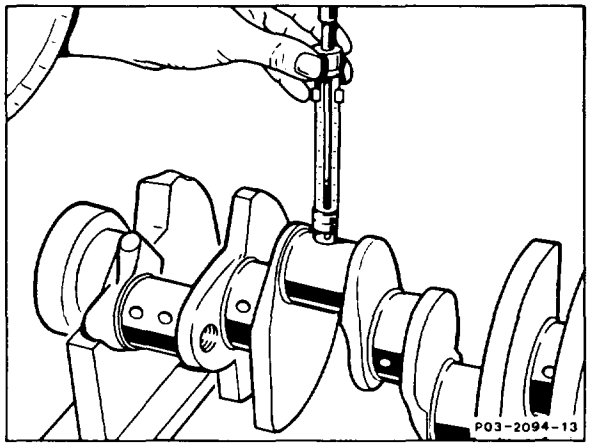

Hardening

Always inductive-harden journals with hardened radii (arrows).
If this is not possible, scrap crankshaft.

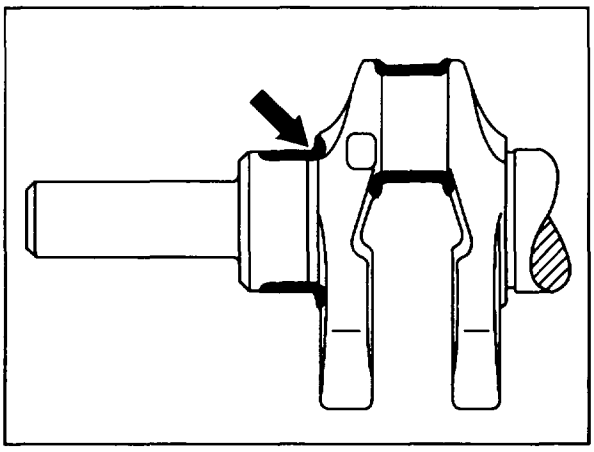

P03-5357-13

Checking hardening

The setting of the hardening equipment must be checked by metallographic sections in order to achieve proper hardening.

These specimens can be taken from trial hardenings on scrapped crankshafts.

Check hardening by etching the surface of the journal with a 2 % alcoholic nitric acid (HNO_3).

No dark patches must appear on the surface of the journal.

The hardened radii must be just as light in color as the surface of the journal.

The non-hardened radii darken in color.

As a comparison, it is recommended to perform etching on a metallographically checked journal.

Following this, carefully wash off the nitric acid with alcohol.

Corrosion protection

If the crankshaft is not installed again immediately, it must be treated with anti-corrosion oil.

03–3200 Mounting crankshaft in bearings

Preceding work:
Crankshaft removed
Engine disassembled, cleaned
Crankshaft checked, cleaned

Operation no. of operation texts and work units or standard texts and flat rates

Mounting crankshaft radially

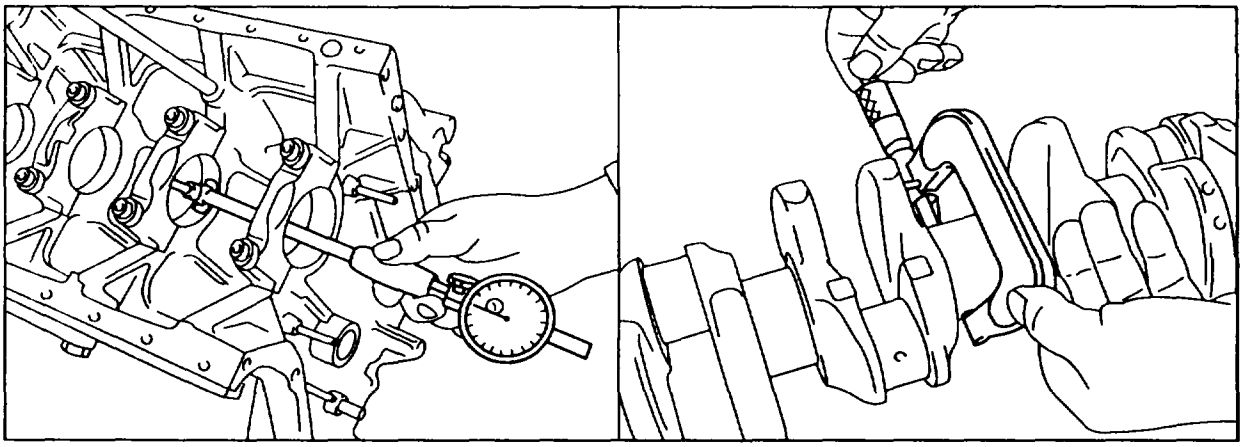

P03-5358-53

Crankshaft bearing caps	install, tighten (30 Nm)
Bearing bore Ø	measure, note
Crankshaft bearing journal Ø	measure, note
Bearing shells	match, see table
	⚠ Always match thick bearing shell in the bearing cap.
Likely radial bearing play	calculate
Bolt holes	clean by blowing out
Bearing shells	insert into crankcase and bearing caps
Bearing cap bolts	tighten (30 Nm)
Bearing Ø	measure
Bearing play (specification 0.035 – 0.045 mm)	calculate
Bearing caps	remove
Bearing shells in crankcase	oil
Crankshaft at bearing points	oil
Bearing caps with bearing shells	oil, install
Thread and contact surface of bolts	oil, install bolts

Bolts	tighten to torque and tightening angle (55 Nm + 90° tightening angle)

⚠
Rotate the crankshaft while tightening the bolts to enable any sticking to be determined in time.

Mounting crankshaft axially

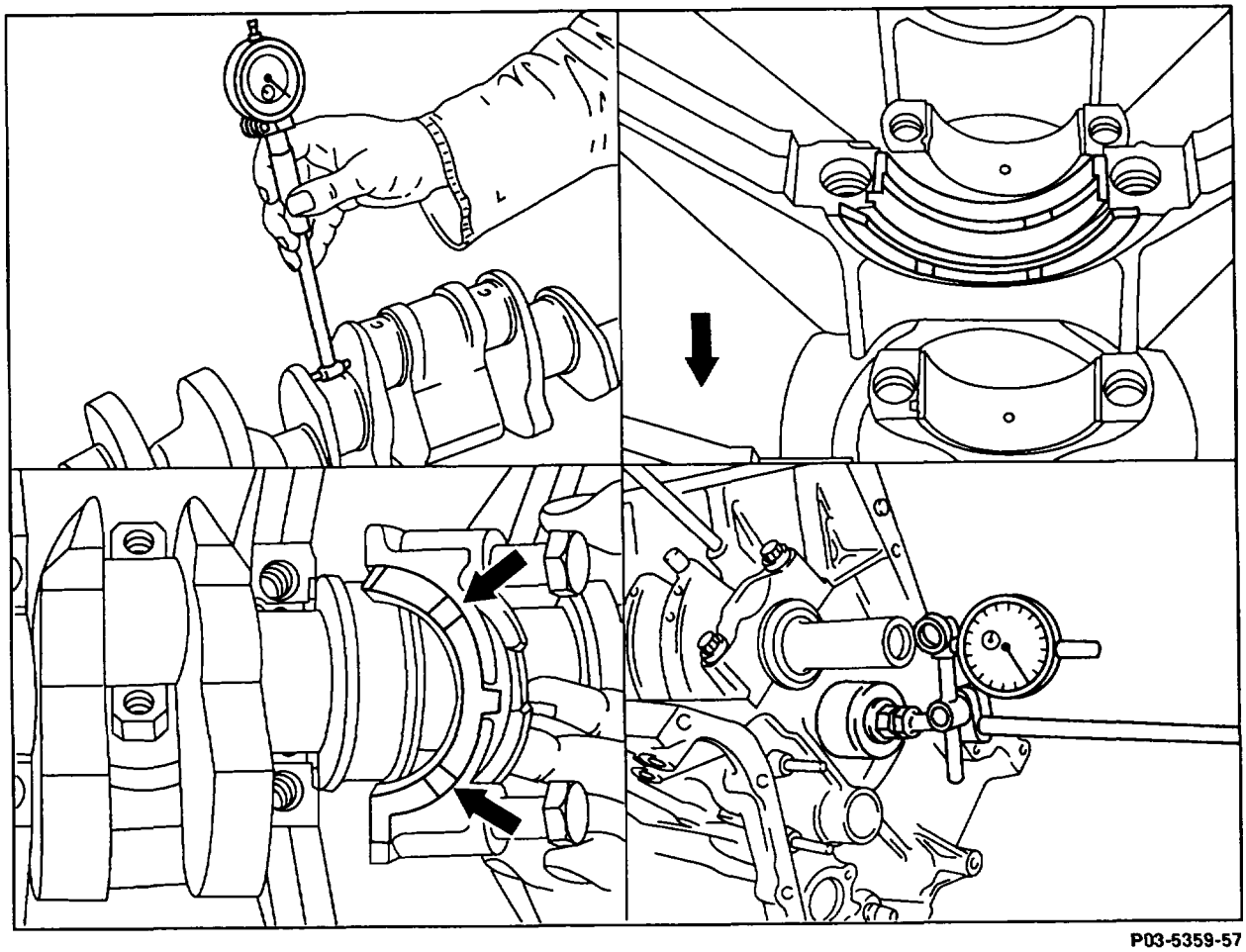

P03-5359-57

Fit bearing width at crankcase and at fit bearing cap	measure, note
Fit bearing width at crankshaft	measure, note
Thrust washers	match

⚠
Thrust washers of the same thickness must always be inserted on one side in the crankcase and in the bearing cap. The oil grooves must face toward the thrust face of the crankshaft and be oiled. The anti-twist lock is located at the thrust washer in the bearing cap.

Likely axial bearing play	calculate
Axial bearing play with crankshaft installed	measure (specification 0.100 – 0.200 mm)

Crankshaft bearing diagram

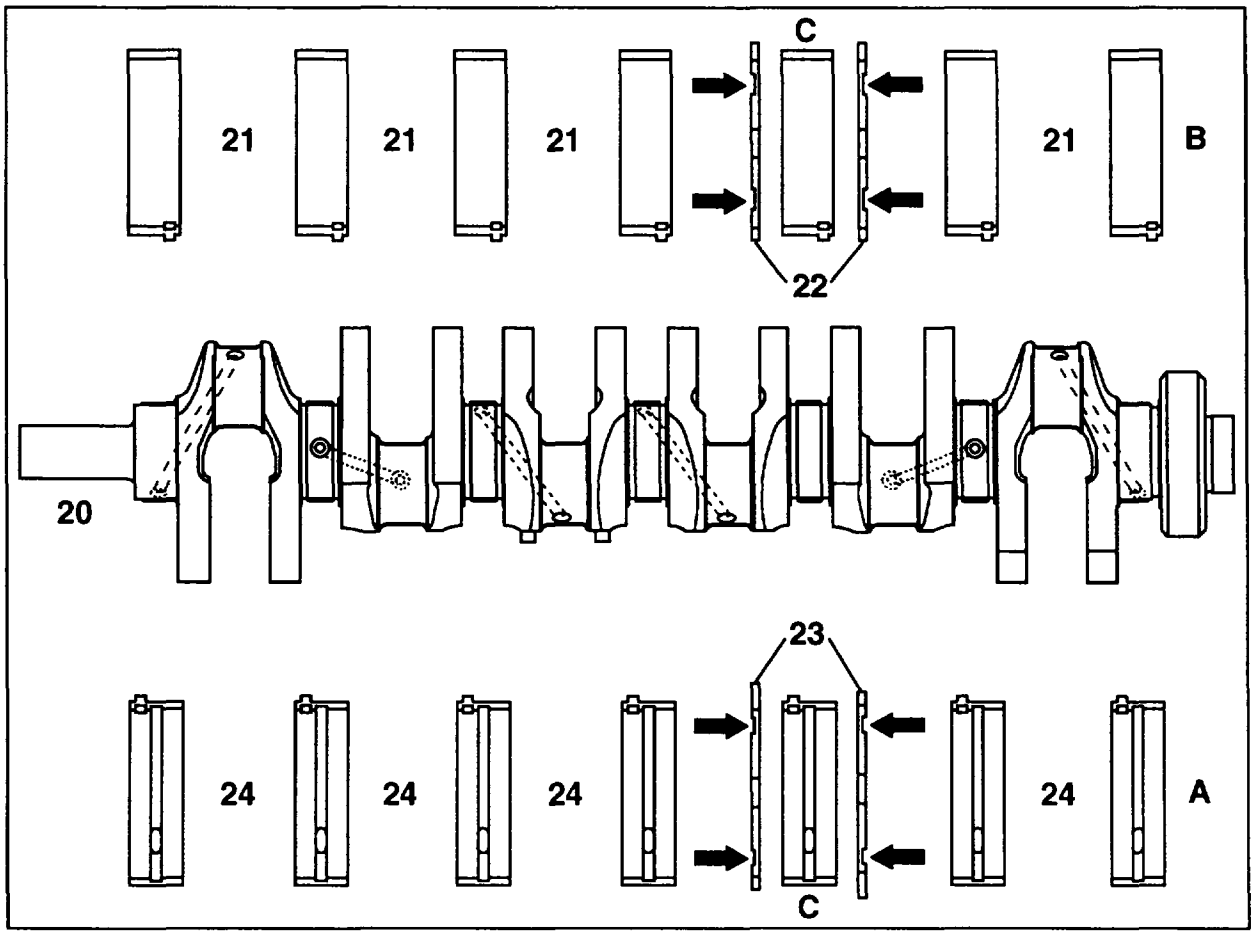

P03-5296-57

A Bearing shells in crankcase
B Bearing shells in bearing caps

Production allowances and identification of basic bores of crankcase

Bore Ø	Identification [1]	Size	Fit bearing width
62.500–62.506	1 punch mark	Standard	19.979–20.000
62.506–62.513	2 punch marks	Standard	19.979–20.000
62.513–62.519	3 punch marks	Standard	19.979–20.000

[1] The production tolerance stages are identified by punch marks in the contact surface of the oil sump, in each case next to the crankshaft bearing

Bearing shells for crankshaft bearings (replacement parts) [2]

Size	Bearing inner Ø	Color code	Part suppl. number	Bearing shell wall thickness [3] in crankcase	Bearing shell wall thickness [3] in bearing cap
Standard	58.00	blue	52	2.255–2.260	2.255–2.260
Standard	58.00	yellow	54	2.260–2.265	2.260–2.265
Standard	58.00	red	56	2.265–2.270	2.265–2.270
Standard 1	58.00	white	57	–	2.270–2.275
Standard 1	58.00	violet	58	–	2.275–2.280
Rep. 1	57.75	blue	52	2.375–2.380	2.375–2.380
Rep. 1	57.75	yellow	54	2.380–2.385	2.380–2.385
Rep. 2	57.50	blue	52	2.500–2.505	2.500–2.505
Rep. 2	57.50	yellow	54	2.505–2.510	2.505–2.510
Rep. 3	57.25	blue	52	2.625–2.630	2.625–2.630
Rep. 3	57.25	yellow	54	2.630–2.635	2.630–2.635
Rep. 4	57.00	blue	52	2.750–2.755	2.750–2.755
Rep. 4	57.00	yellow	54	2.755–2.760	2.755–2.760

[2] A parts set with the replacement part supplementary number 52, 54 and 56 consists in each case of a bearing shell for the crankcase and the bearing shell for the bearing cap.
Parts with the part supplementary number 57 and 58 are supplied individually and can be used only for the bearing cap (without oil groove).

[3] The thickness to be used is the thickest measured point in the middle of the bearing shell.

Crankshaft machining dimensions

Size [5]	Crankshaft bearing journal Ø	Color code [4]	Fit bearing width [6]
Standard	57.960–57.965	blue	24.500–24.533
Standard	57.955–57.960	yellow	24.500–24.533
Standard	57.950–57.955	red	24.500–24.533
Standard 1	57.945–57.950	white–blue	24.600–24.633
Standard 1	57.940–57.945	white–yellow	24.600–24.633
Standard 1	57.935–57.940	white–red	24.600–24.633
Rep. 1	57.705–57.715	–	24.700–24.733
Rep. 2	57.415–57.465	–	24.900–24.933
Rep. 3	57.205–57.215	–	25.000–25.033
Rep. 4	56.955–56.965	–	–

[4]) The tolerance classification of the crankshaft bearing journal Ø is factory-identified with color code next to bearing journals.

[5]) Crankshafts of standard size 1 are not supplied as replacement parts.

[6]) The thrust washers are supplied in the thicknesses 2.15, 2.20, 2.25, 2.35 and 2.40 mm as a parts set in each case with a thrust washer for the crankcase and a thrust washer for the bearing cap.

Test data

Crankshaft bearing play	radial	0.035 – 0.045
	axial	0.100 – 0.200
Conrod bearing play	radial	0.02 – 0.05

Tightening torques in Nm or tightening angle

Crankshaft bearing cap bolts [1]	Initial tightening torque	55
	Tightening angle	90°

[1]) Re-use bolts up to a bolt length of max. 63.8 mm

Special tools

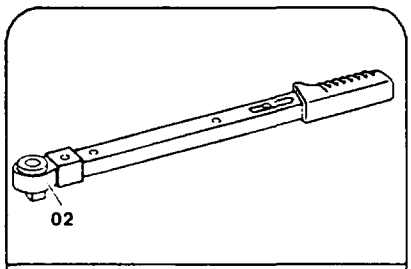

001 589 72 21 00

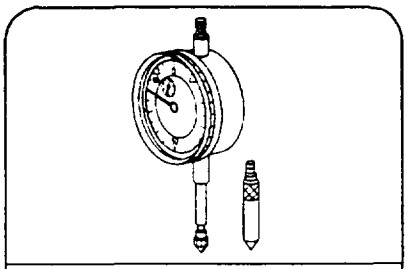

001 589 53 21 00

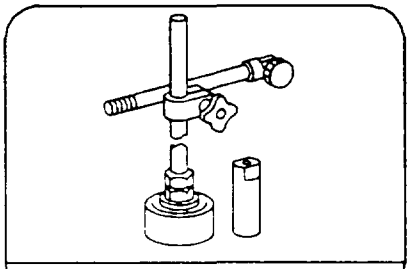

363 589 02 21 00

Commercially available tools

Quick-calipers for internal measurements
Ø 20 – 40 mm
Ø 40 – 60 mm
Ø 60 – 80 mm
Micrometer
0 – 25 mm
50 – 75 mm

03–3240 Replacing front crankshaft radial seal

Preceding work:
Belt pulley, vibration damper and hub removed (03–3420).

Operation no. of operation texts and work units or standard texts and flat rates
03–3000 – 03–3112

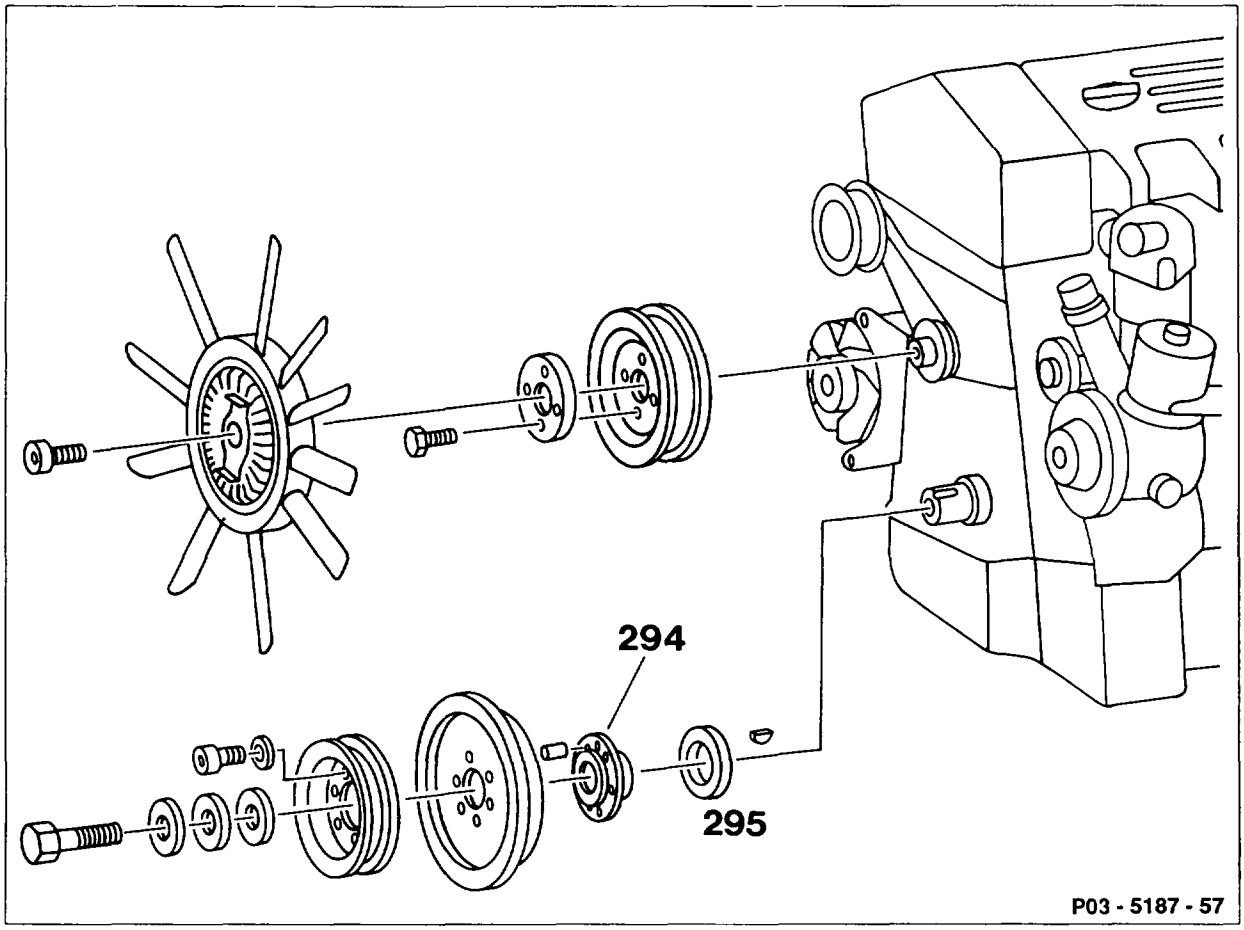

Contact surface of hub (294)	check (step 1).
Radial seal (295)	remove (step 2).
Mounting hole	clean, deburr.
Sealing lip of radial seal (295)	oil (step 4).
Radial seal (295)	install with insertion sleeve 601 589 03 14 00 (steps 5 to 7).
Engine	run, check for leaks.

Special tool

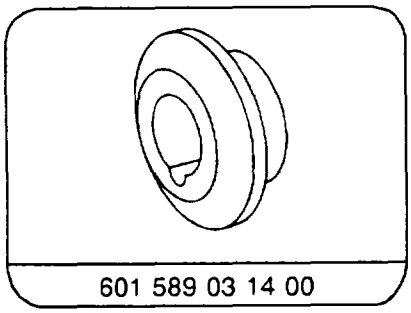

Note
An oil leak can be found after spraying the cleaned and dried surrounding area with Mercedes-Benz white contrast spray 000 989 03 59 00.

Replacing

1 Check contact surface of hub of belt pulley/vibration damper; if contact surface has grooves, use repair size radial seal with a sealing lip positioned to the inside.

2 Press out radial seal (295) with a screwdriver.

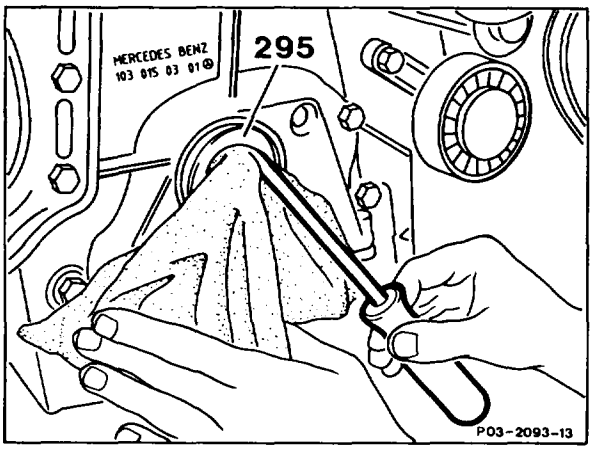

⚠
Do not damage crankshaft and mounting hole for radial seal; use clean rag as base.

3 Deburr edge of mounting hole for radial seal.

4 Oil sealing lip of radial seal (295).

⚠
Do not use grease! Grease prevents the sealing lip of the radial seal transporting back the engine oil.

5 Fit radial seal (295) onto the insertion sleeve (1) 601 589 03 14 00.

6 Push on insertion sleeve (1) so that the groove in the insertion sleeve (1) is aligned with the Woodruff key (2).

7 Pull in insertion sleeve (1) as far as the stop with bolt (9) and 3 dished washers (8).

Note
The radial seal must be positioned at right angles to the crankshaft journal otherwise proper sealing is not assured.

Position of sealing lip
A = Standard position of radial seal
B = Repair position of radial seal

8 Install belt pulley/vibration damper (03–3420).

9 Run engine, check for leaks.

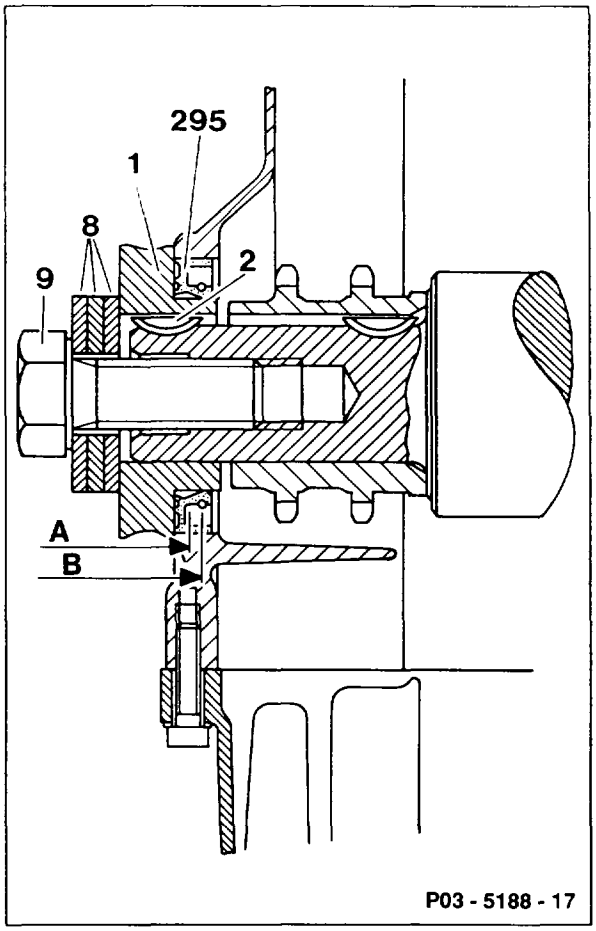

03–3270 Replacing rear crankshaft radial seal

Preceding work:
Manual or automatic transmission removed (26–020 or 27–600).
Flywheel or driven plate removed (03–4100).
Two-mass flywheel removed (03-4620).

Operation no. of operation texts and work units or standard texts and flat rates
03-3063 – 03-3301

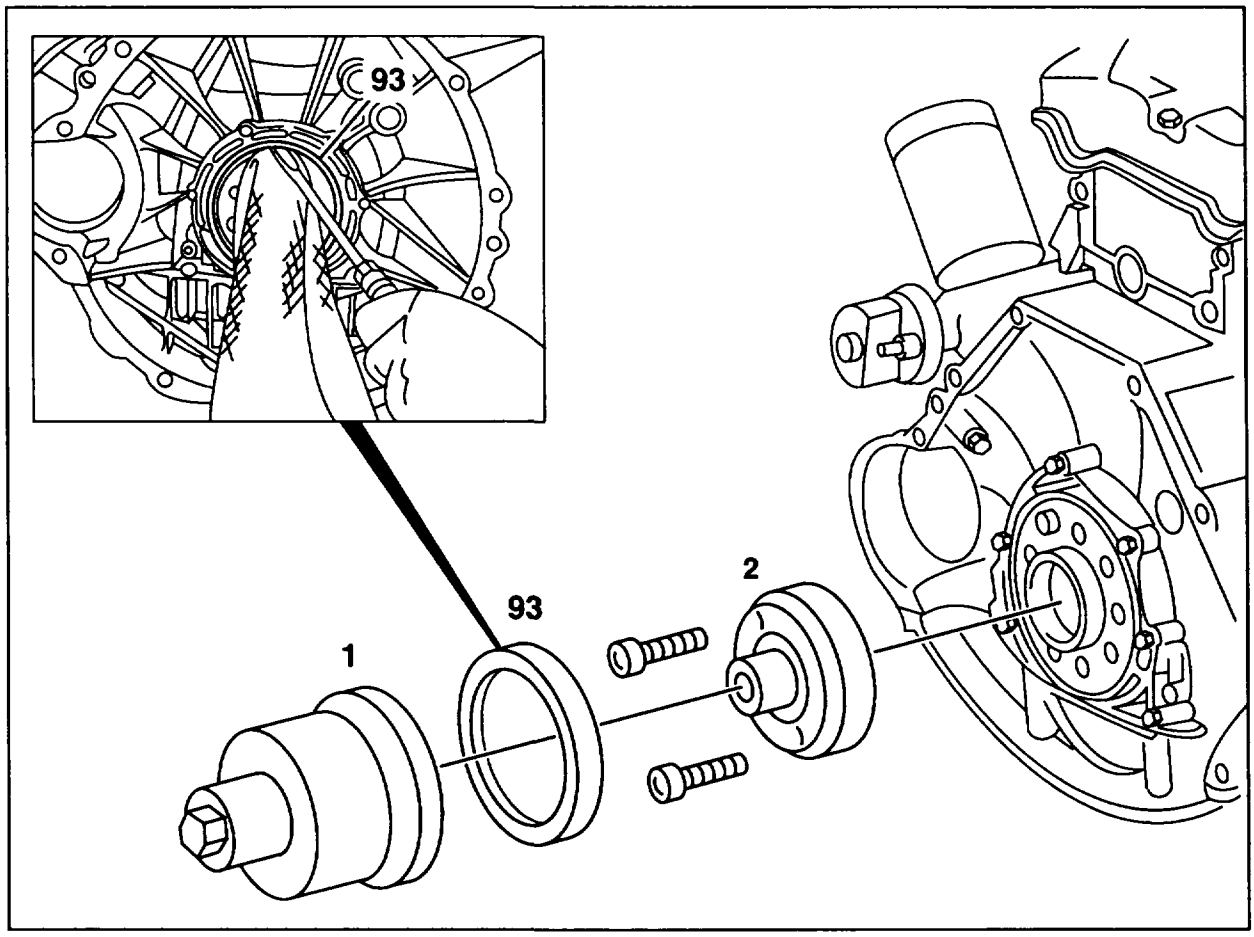

P03-5354-57

Radial shaft seal (93)	prise out with a screwdriver
	⚠ Do not damage crankshaft and mounting hole for radial shaft seal. Use a clean cloth as a base.
Edge of mounting hole for radial shaft seal (93) . .	deburr
Contact surface of radial seal (93) at crankshaft .	check for groove caused by wear; if groove exists, install repair radial seal with sealing lip offset 3 mm to the inside.
Inner part of insertion tool (2)	attach to crankshaft. Special tool 601 589 03 43 00

Sealing lip of radial shaft seal (93)	moisten with engine oil
	⚠ Do not use grease. Grease prevents the return swirl on the sealing lip of the radial shaft seal transporting back the engine oil.
Radial shaft seal (93)	fit on to inner part of insertion tool (2) and press into end cover as far as a stop with insertion bell (1)
Engine	run and check for leaks (01-2240)

Special tool

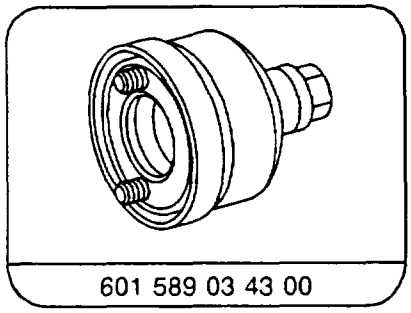

601 589 03 43 00

Note

The radial seal is pressed into the end cover flush without the use of sealant. The end cover is fixed in position on the crankcase by 2 dowel pins and bolted on.

An oil leak can be determined after spraying the cleaned and dried surrounding area with Mercedes-Benz white contrast spray 000 989 03 59.

The mounting holes in the crankshaft are designed as blind holes.

03–3300 Removing and installing grooved ball bearing and end cover in crankshaft

Preceding work:
Transmission removed (26–020)
Clutch removed (25–050).

Operation no. of operation texts and work units or standard texts and flat rates

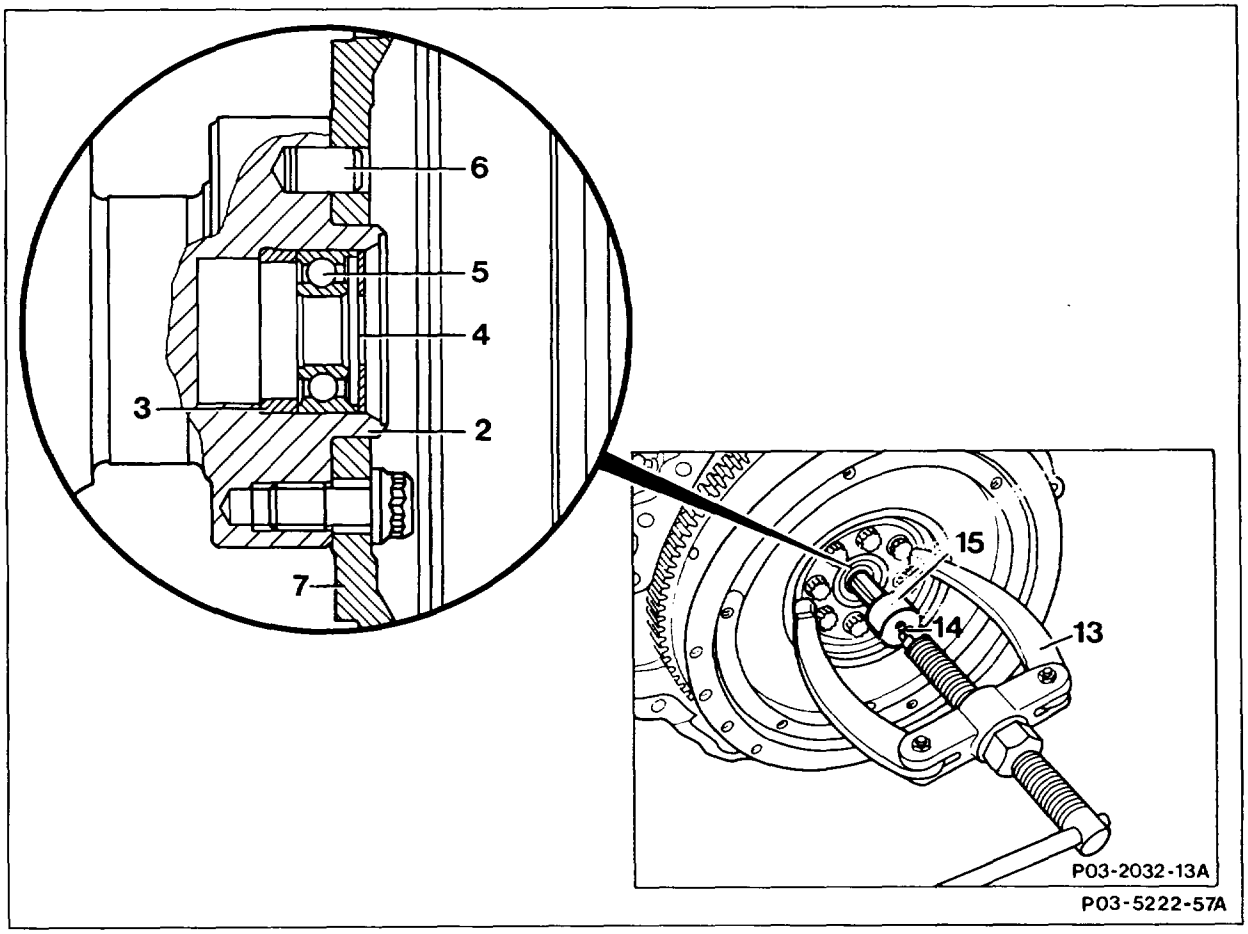

2	Crankshaft	5	Grooved ball bearing
3	Spacer ring	6	Dowel pin
4	End cover	7	Flywheel

Puller (13) 000 589 33 33 00 with insert (15)

000 529 25 33 00	position on grooved ball bearing (5).
Nut (14)	turn, expand taper.
Grooved ball bearing (5) with end cover (4)	pull out.
New grooved ball bearing (5)	knock in with 35 mm dia. sleeve at outer race as far as stop.

Grooved ball bearing (5)	must be seated firmly at outer race in crankshaft (2). **Note** If grooved ball bearing (5) is loose, stick it into the bearing bore of the crankshaft with Loctite 648, 003 989 32 17 10.
End cover (4)	knock in flush.

Data in mm

Bearing bore in crankshaft	34.99 – 35.01

Special tools

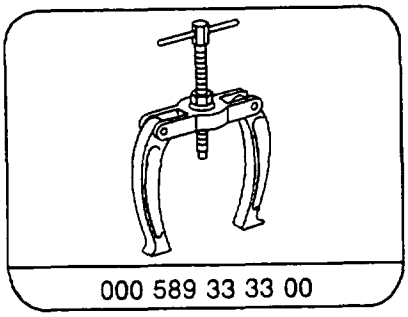

000 589 33 33 00

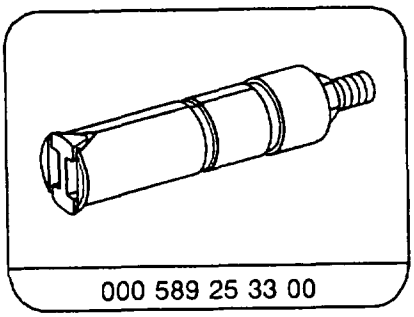

000 589 25 33 00

03–3420 Removing and installing belt pulley/vibration damper and hub

Preceding work:
Bottom engine compartment panel removed (Maintenance Manual 2, op. item 6190).
Models 107, 124, 126, 201: radiator removed (20–4200).
Model 129: fan shroud removed (20–3400).
Viscous fan clutch removed (20–3120).

Operation no. of operation texts and work units or standard texts and flat rates
03–1320 – 03–1911

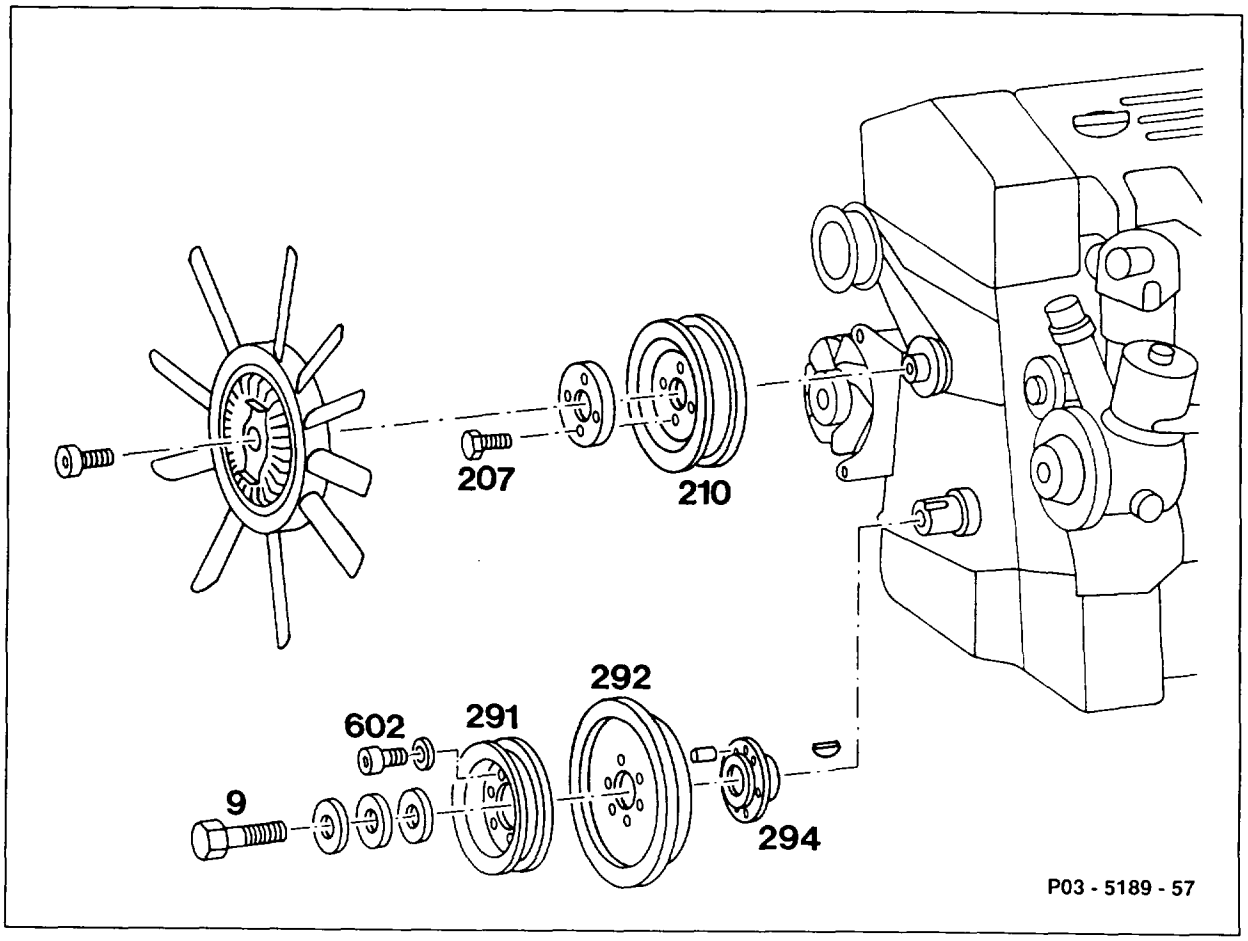

Guard plate at radiator or condensor	attach (step 1).
Crankshaft cylinder 1	rotate to TDC (step 2).
Bolts (207) belt pulley (210) fan	slacken, tighten (10 Nm) (step 3).
Poly-V-belt	remove, install (13–3420).
Belt pulley (210) of fan	remove, install (step 5).
Holding lock for crankshaft/ring gear	remove, install (03-5000).
Belt pulley (291) and vibration damper (292)	remove, install (step 7).

Bolt (9) of hub	unscrew, screw on 300 Nm (step 8).
Hub (294) with puller 103 589 00 33 00	pull off, press on (step 9).

Tightening torques in Nm

Bolts of vibration damper to hub	25
Bolt of hub to crankshaft	300

Modified washers for vibration damper and belt pulley at hub

Harder washers are used to achieve greater security against bolts slackening.

Production breakpoint: 05/1985

Model	Engine	Engine end no.	
		manual transmission	automatic transmission
124.030	103.980	000758	003040

Special tools

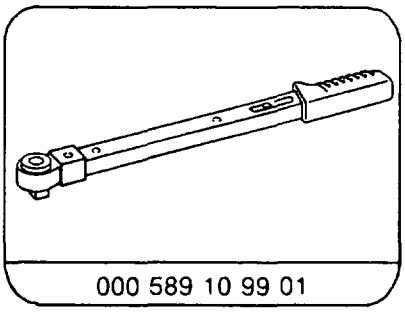

000 589 10 99 01

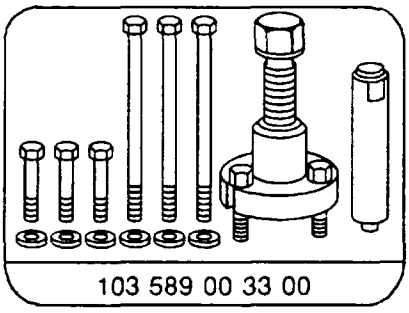

103 589 00 33 00

Shop-made tool

Guard plate for radiator/condensor — Dimensions: approx. 680 × 480 × 1

Note

Belt pulley, vibration damper and hub can be replaced without balancing.

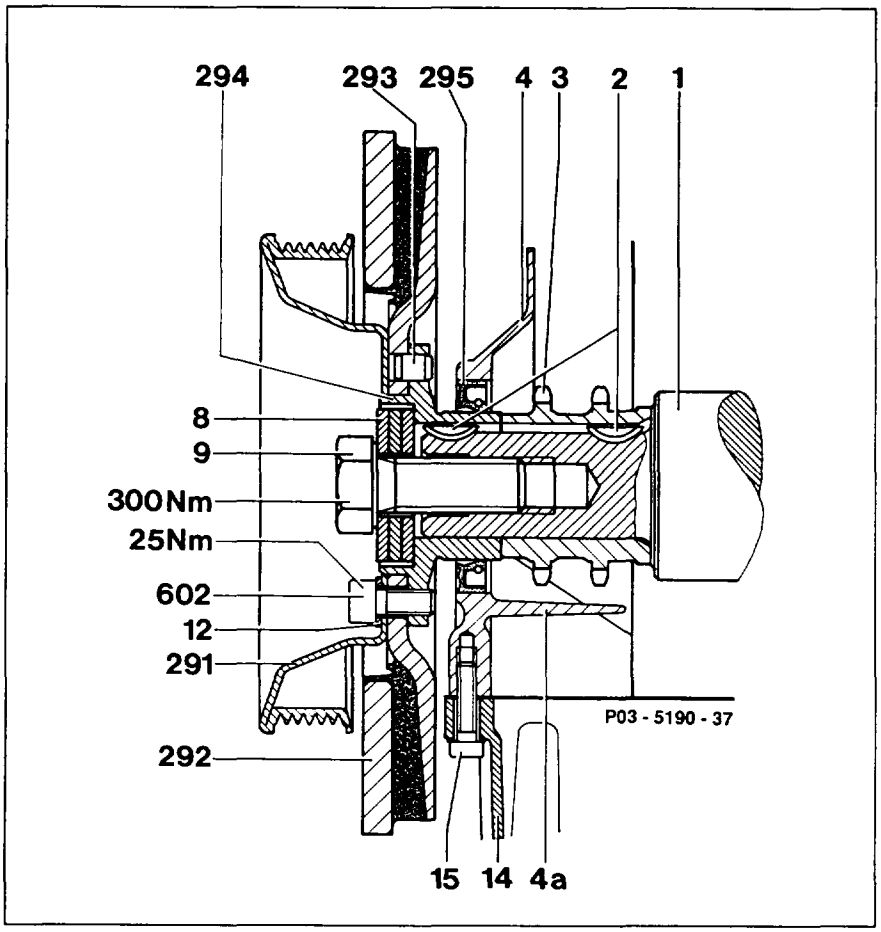

1	Crankshaft	14	Oil sump
2	Woodruff key	15	Bolt
3	Crankshaft gear	291	Belt pulley
4	Timing case cover	292	Vibration damper
4a	Timing chain lock	293	Straight pin
8	Dished springs (3 ea.)	294	Hub
9	M18 × 1.5 × 45 bolt	295	Radial seal
12	8.4 washer	602	M8 × 18 bolt

1 Attach guard plate to radiator or condensor of air conditioner.

2 Rotate crankshaft cylinder 1 to TDC (arrow) so that the Woodruff key in the crankshaft is facing up vertically.

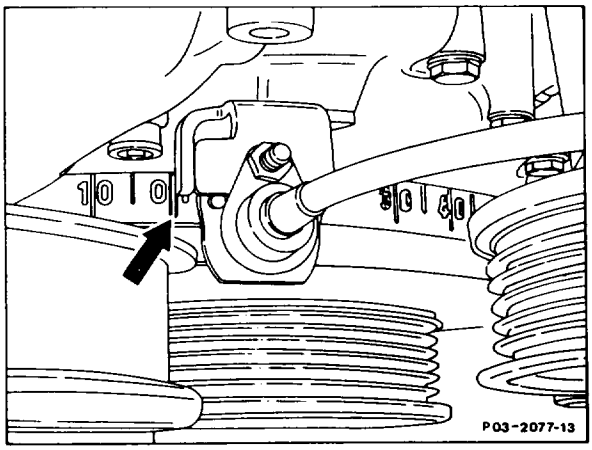

3 Slacken bolts (207) of belt pulley (210) of viscous fan clutch.
Tightening torque 10 Nm.

4 Remove poly-V-belt (13-3420).

5 Unscrew belt pulley (210) of viscous fan clutch and remove.

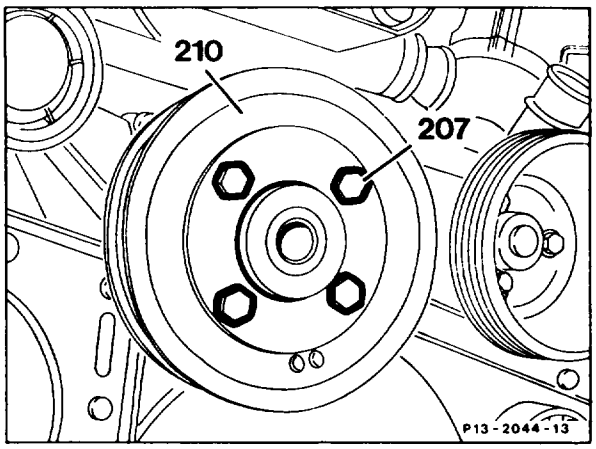

6 Install holding lock for crankshaft/ring gear (30-5000).

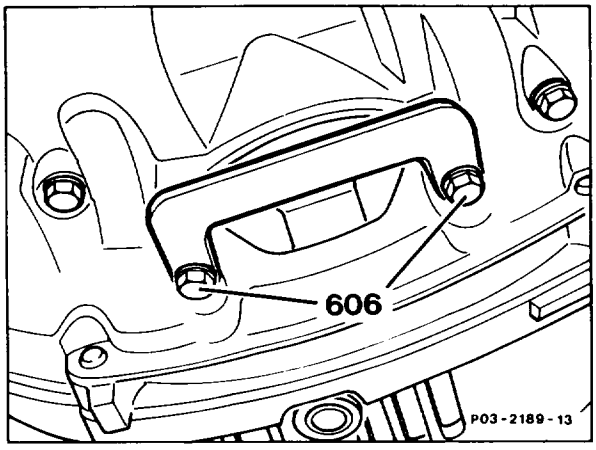

7 Unscrew bolts (602), take off belt pulley (291) and vibration damper (292).

Installation note
The vibration damper (292) is fixed in place with a dowel pin (293).
Install bolts (602) with washers.
Tightening torque 25 Nm.

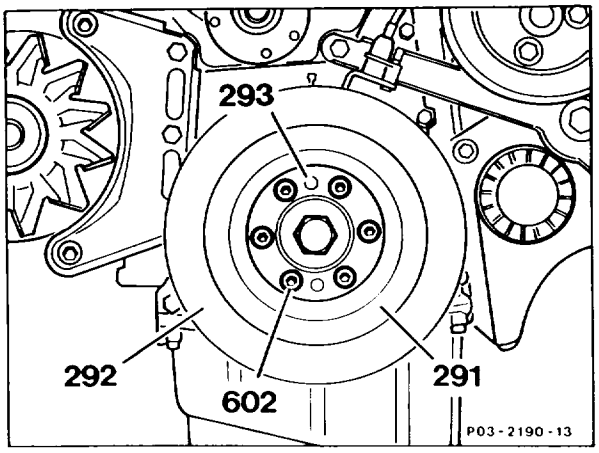

8 Unscrew bolt of hub with 3 dished springs.

Installation note
Oil thread of bolt and dished springs. Fit on dished springs with curved side facing bolt head. Tightening torque 300 Nm.

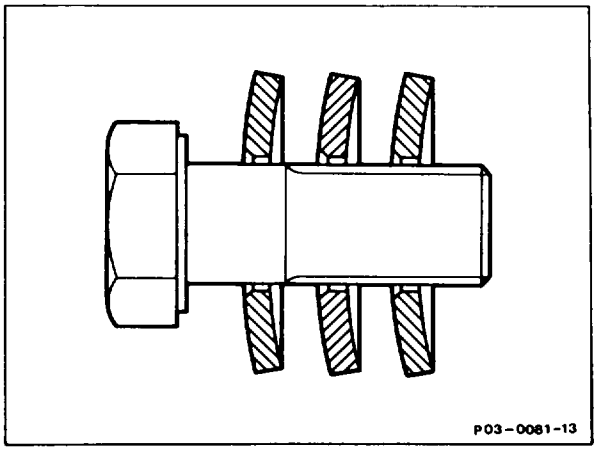

9 Remove hub (294) with puller 103 589 00 33 00.

Installation note
Heat hub (294) to approx. 50 °C so that it can easily be pushed onto the crankshaft.
When pushing on, turn to determine whether the groove in the hub (294) is aligned with the Woodruff key in the crankshaft.

10 Install in the reverse order.

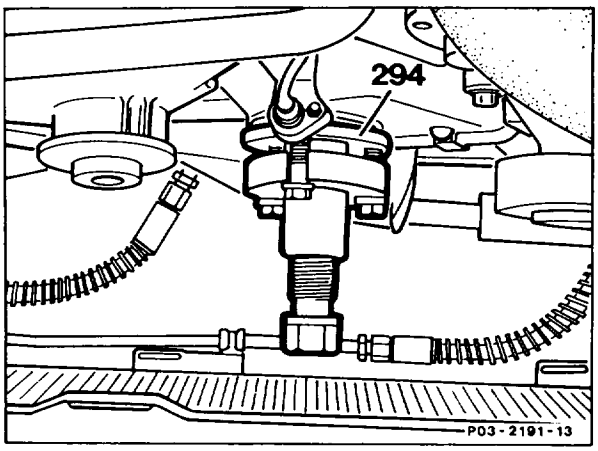

03–3450 Checking, correcting setting of TDC sensor

Preceding work:
Viscous fan clutch removed (20–3120).
Poly-V-belt removed (13–3420).
Cylinder head cover removed (01–0500).

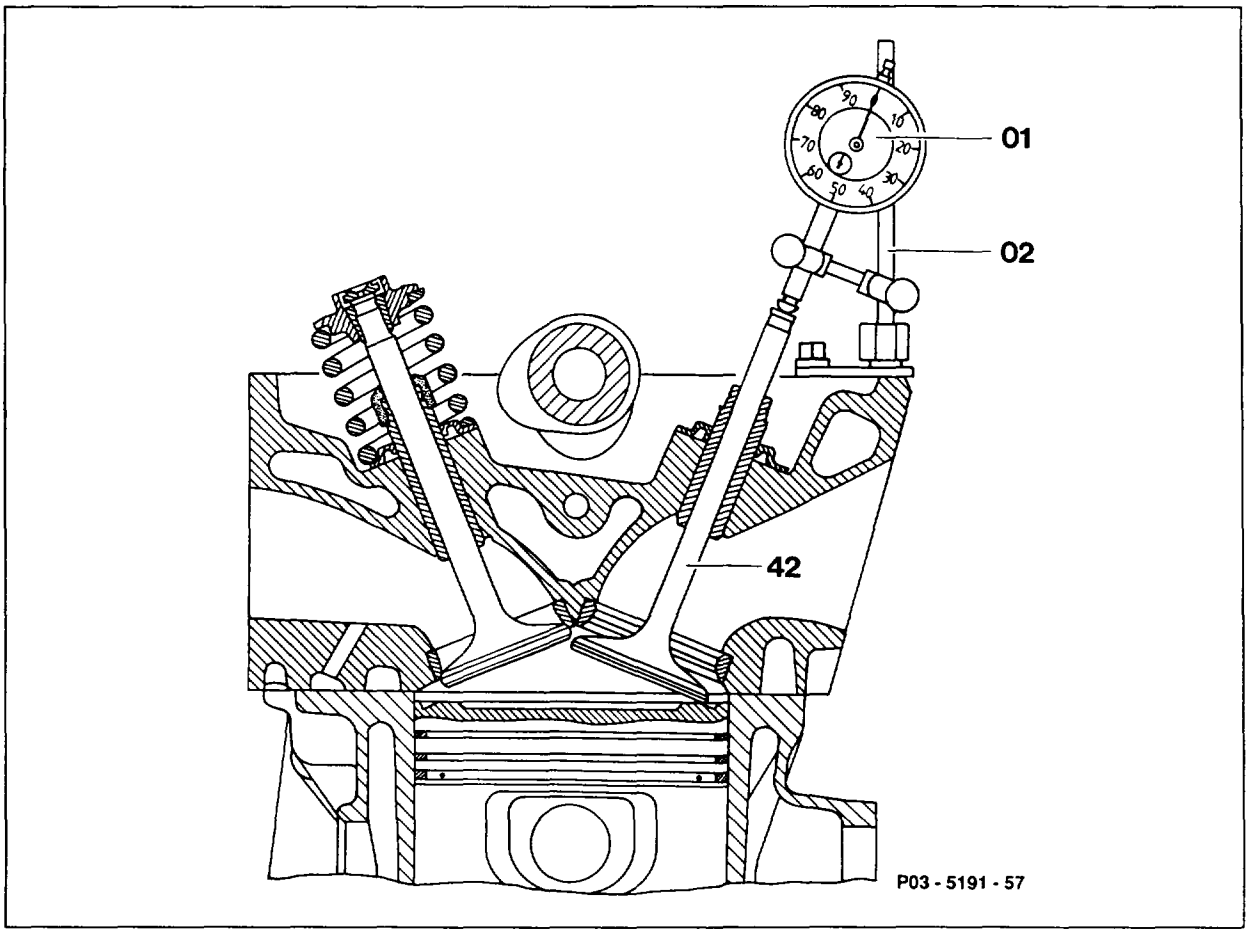

Checking setting of TDC sensor

Piston of cylinder 1	turn to 10° before ignition TDC (step 1).
Valve spring at inlet valve of cylinder 1	remove, install (05–250).
Valve stem seal on inlet valve of cylinder 1	remove, install (05–270).
TDC sensor (L1)	remove, install (step 4).
Dial gauge holder (02) 136 589 04 21 00	fit onto cylinder head (step 5).

Inlet valve (42)	fit onto piston crown.
Dial gauge (01)	insert into dial gauge holder (02) with 4 mm preload (step 6).
Crankshaft	rotate in direction of rotation of engine and set TDC at cylinder 1 with dial gauge (01).
Large pointer of dial gauge (01)	set to "0".
Crankshaft	rotate in direction of rotation of engine until dial gauge has moved back by the value, see table "piston travel" (20° after TDC cylinder 1).
In this position	insert fixing device 119 589 00 21 00 into adjusting slide (step 10).
Fixing device 119 589 00 21 00 must engage into measuring pins	on vibration damper (step 11).

Correcting setting of TDC sensor

Cap of cooling system	open (release pressure).
Heating water return line	remove, install, replace seal (step 14).
Opening of coolant pump	seal.
Screw of adjusting slide	slacken (step 16).
Move adjusting slide until fixing device 119 589 00 21 00	engages at vibration damper.
Screw of adjusting slide	tighten.
Coolant	pour in (20-0100).

Piston travel at crankshaft position 20° after TDC of cylinder 1 in mm

Measured via inlet valve	3.31
Measured vertically on piston	3.07

Special tools

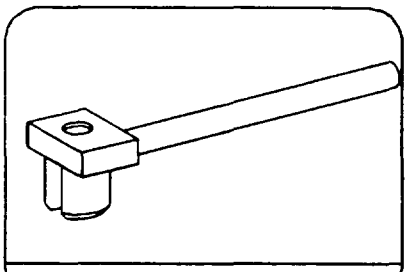

119 589 00 21 00

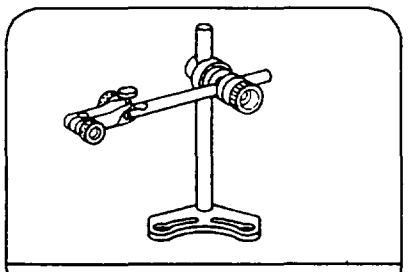

136 589 04 21 00

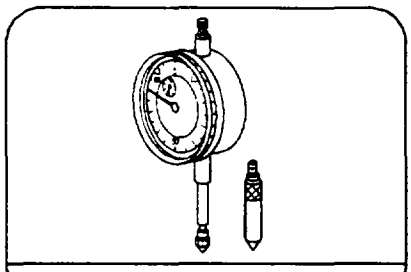

001 589 53 21 00

Notes

The TDC sensor (L1) with bracket is attached to the timing case cover.
The measuring pin (arrow) in the vibration damper must be positioned in the middle below the TDC sensor (L1) in the setting 20° after TDC of cylinder 1.

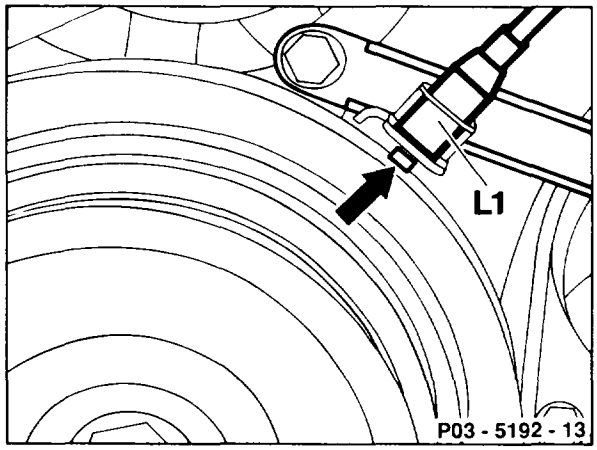

The setting of the TDC sensor must be checked and corrected, if necessary:

- After replacing the crankshaft or the vibration damper.
- After replacing the timing case cover.
- After fitting parts to short engines.

Checking setting of TDC sensor

(with cylinder head in place)

Note

With cylinder head removed, attach a dial gauge holder to the crankcase and position dial gauge pin vertically on the piston crown.

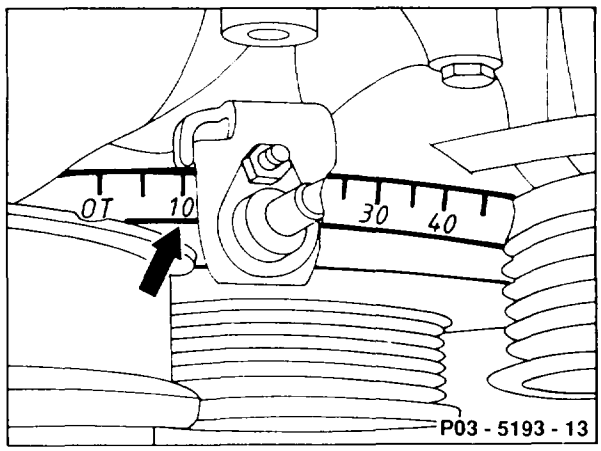

1 Set piston of cylinder 1 to 10° before ignition TDC (arrow).

2 Remove valve stem seal at inlet valve of cylinder 1 (05-2700).

3 Unscrew TDC sensor (L1) and pull out of setting slide (3).

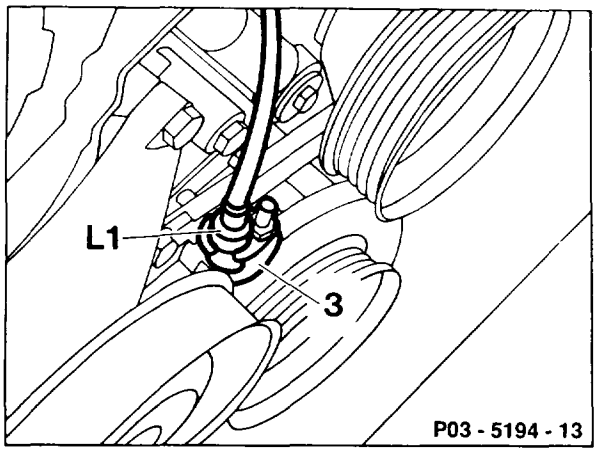

4 Attach dial gauge holder (02) 136 589 04 21 00 to cylinder head.

5 Fit inlet valve onto piston crown.

6 Insert dial gauge (01) with dial gauge extension (03) into dial gauge holder (02) with a preload of 4 mm.

7 Rotate crankshaft in direction of rotation of engine and set TDC at cylinder 1 with dial gauge (01).

8 Turn scale of dial gauge until the large pointer of the gauge (01) is set to "0".

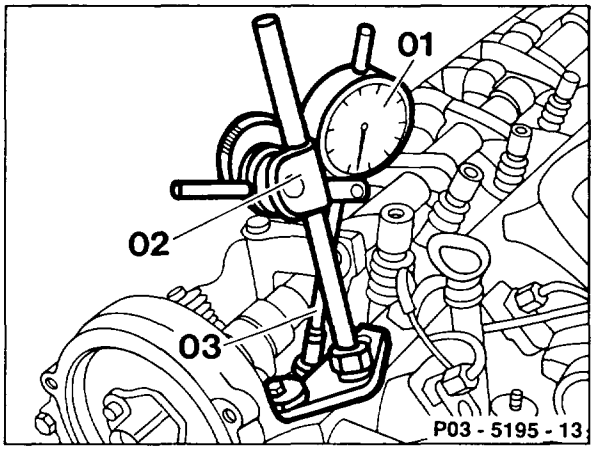

9 Turn on crankshaft in direction of rotation of engine until dial gauge has moved back by the appropriate value (piston travel).

10 Insert fixing device (4) 119 589 00 21 00 into the setting slide (3).

11 The groove of the fixing device (4) must engage in the measuring pin on the vibration damper.

12 If the fixing device (4) does not engage at the vibration damper (6), correct setting of TDC sensor.

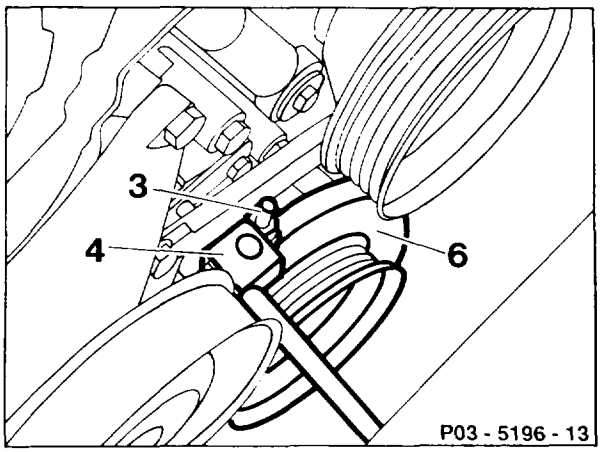

Correcting setting of TDC sensor (L1)

13 Open cap of cooling system (release pressure).

14 Unscrew heating water return line (25) at coolant pump and fan bearing bracket and place to the side with cable connected.

Installation note
Replace O-ring between heating water return line (25) and coolant pump.

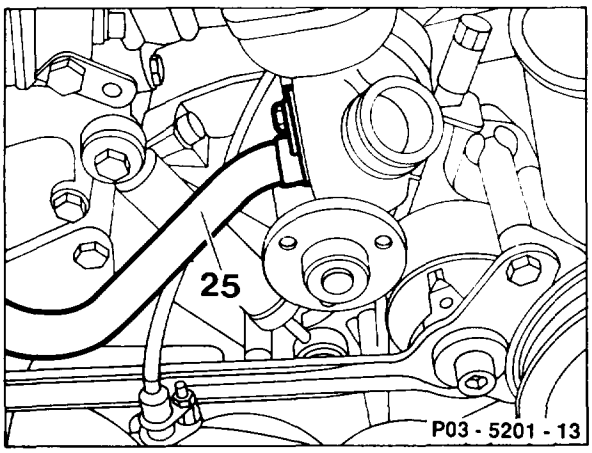

15 Seal opening in coolant pump.

16 Slacken bolt (5) and move setting slide (3) until fixing device (4) engages in the measuring pin on the vibration damper (6).

17 Tighten bolt (5).

18 Install in the reverse order, starting with step 16.

19 Pour in coolant (20-0100).

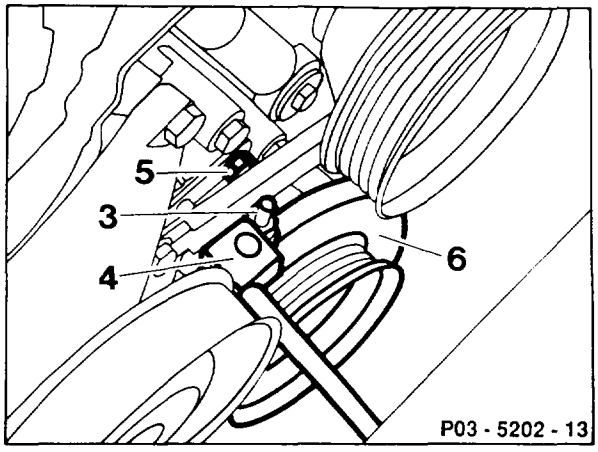

03–4100 Removing and installing flywheel or driven plate

Preceding work:
Manual or automatic transmission removed (26–020 or 27–600).
Clutch of manual transmission removed (25–050).
Holding lock for crankshaft fitted (03–5000).

Operation no. of operation texts and work units or standard texts and flat rates
03-8001, 03-8201

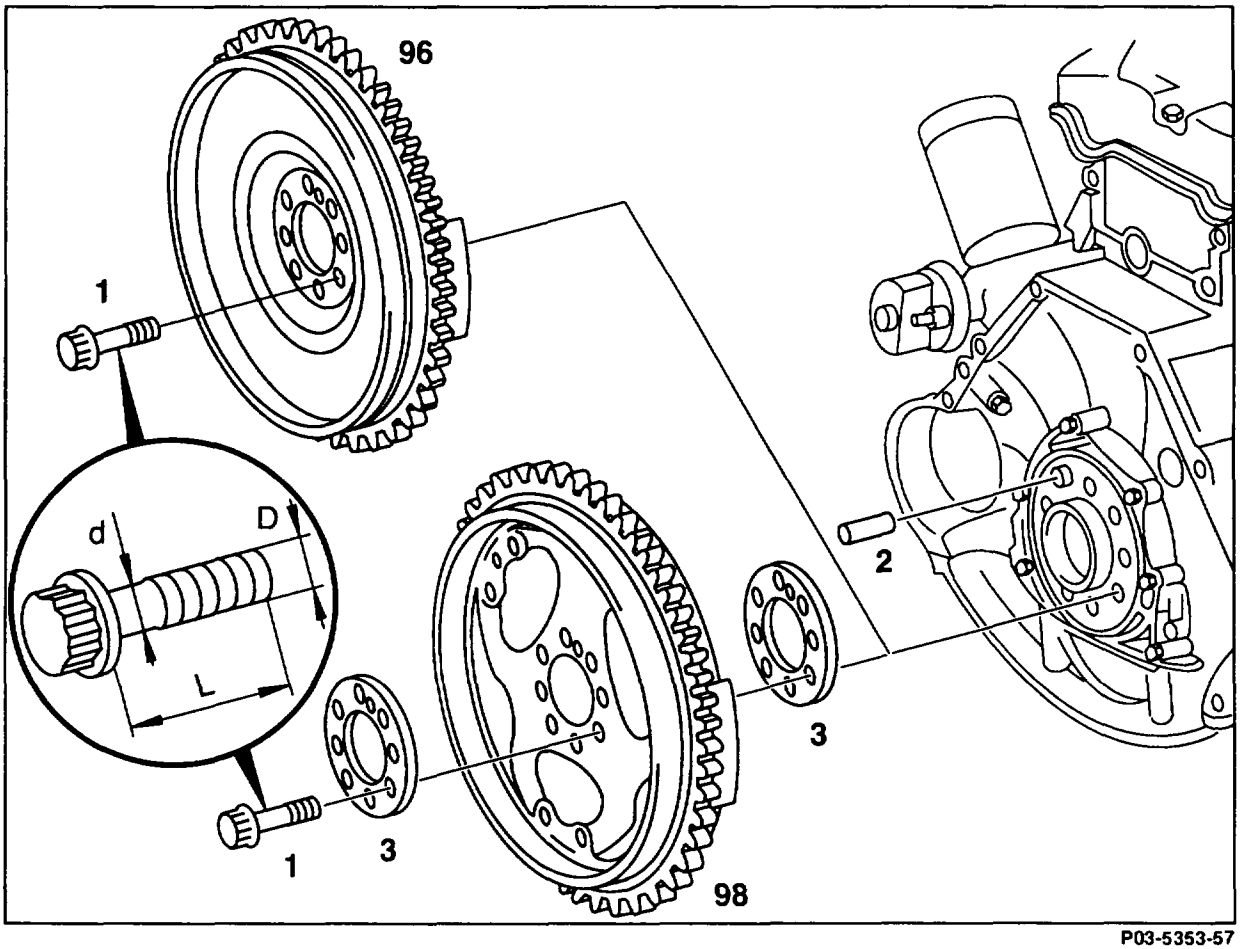

P03-5353-57

Stretch bolts (1)	unscrew, screw on (see table for tightening torque, pay attention to note).
Stretch bolts (1)	examine (see table)

Note
If the minimum stretch shaft Ø is reached, replace stretch bolt (1)

Flywheel (96) or driven plate (98) and disks (3)	take off, fit on

Note
The rear disk (3) may be stuck onto the driven plate (98)

Data

Thread D		M10 × 1
Stretch shaft Ø d	New	8.5 – 0.2
	Minimum Ø	8.0
Length of bolt L	New	22 ± 0.2
Tightening torque	30 Nm + 90° tightening angle	

Note

If no torque wrench is available, the stretch bolts can be tightened on by the specified angle in a single operation with a socket wrench and tommy bar. Do not use a flexi-rod torque wrench for tightening to angle degrees in order to eliminate any possible angle errors.

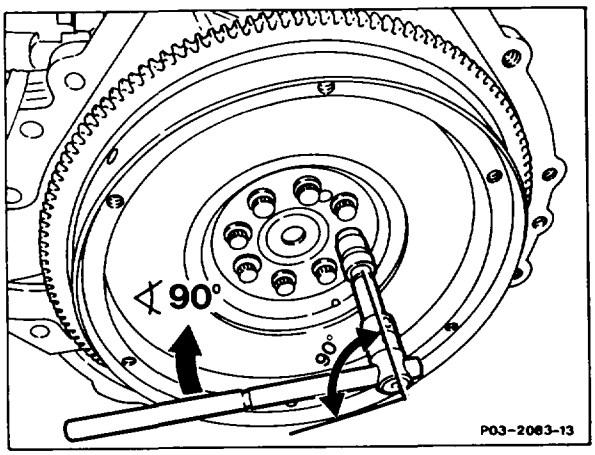

Installation of heavier flywheel on models with manual transmission

The behavior during load changes has been improved as a result of using a heavier flywheel and a modified clutch plate.

Heavier flywheel, production breakpoint: 03/1985

Model	Engine	Engine end no. manual transmission	Engine end no. automatic transmission	Vehicle ident end no. A
124.030	103.980	000118	–	032 198
126.024	103.981	000143	–	193 085
126.025	103.981	000143	–	193 085
126.020	103.941	000068	–	193 085

Use of a straightpin in crankshaft

The straightpin ensures the correct installation position of the sensor segments for the TZL sensor on the flywheel or driven plate relative to the crankshaft.

Production breakpoint: 12/1985

Model	Engine	Engine end no.		Vehicle ident end no.	
		manual transmission	automatic transmission	A	F
107.041	103.982	000213	001116	041763	*
124.026	103.940	001946	002807	*	*
124.030 124.090	103.983	002267	014798	152138	002014
126.020	103.941	000394	001660	215269	*
126.024 126.025	103.981	000877	005508	*	*

* not recorded

Modified driven plate on models with automatic transmission

Broached (previously pressed) recesses (arrows) avoid cracking.

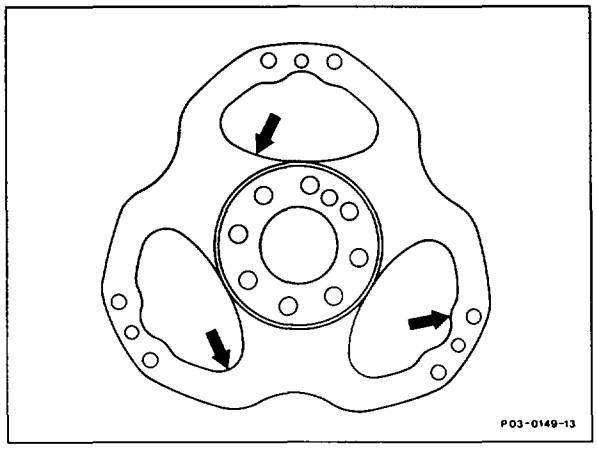

Production breakpoint: 02/1987

Model	Engine	Engine end no. automatic transmission	Vehicle ident end no. A	F
107.041	103.982	005218	065233	*
124.030 124.090	103.983	063076	437662	*
124.230 124.290	103.985	000083	*	*
126.024 126.025	103.981	029121	320548	*

* not recorded

Production breakpoint: 01/1990

Model	Engine	Engine end no. automatic transmission
124.026	103.940	077499
124.226	103.943	001199
126.020	103.941	014762
201.029	103.942	041920

Special tool

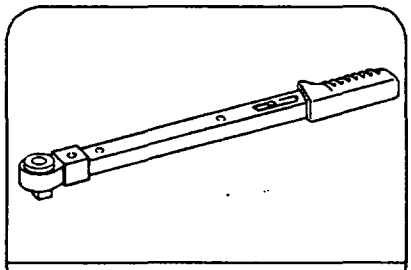

001 589 66 21 00

Note
The flywheels of engines 103.94 and 103.98 differ in their dimensions and weight.

Distinguishing characteristics [1])

Engine	D	D2	H	H1	a
1st version					
103.94	272.0	237	55.5	61.5	24.8
2nd version					
103.94	293.1	237	55.5	61.5	24.8
1st version					
103.98	293.1	244	55.5	61.5	24.8
2nd version					
103.98	292.8	250	60.2	66.2	27.5

[1]) except models with 4MATIC

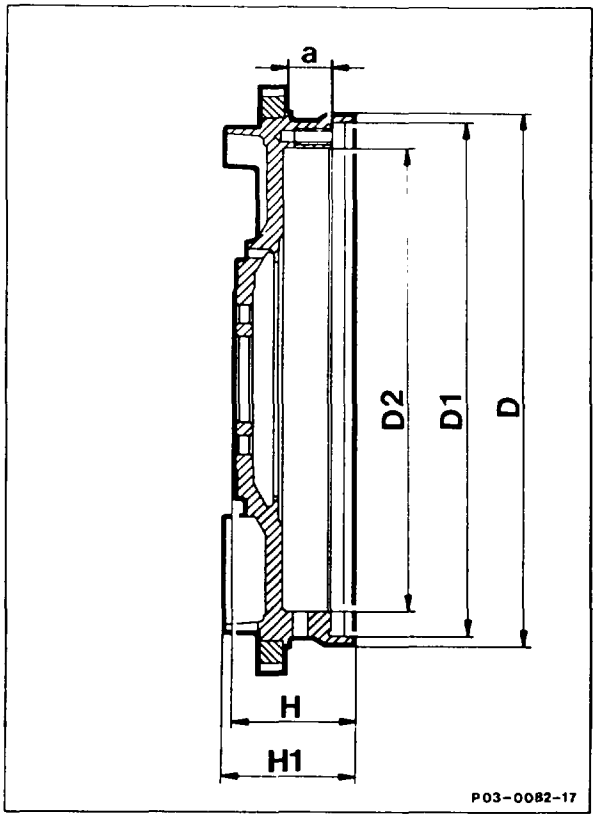

Flywheel and driven plate are located on the crankshaft with fit holes and fixed in each case with a dowel pin.

Flywheel or driven plate together with ring gear are balanced individually and can be replaced without balancing.

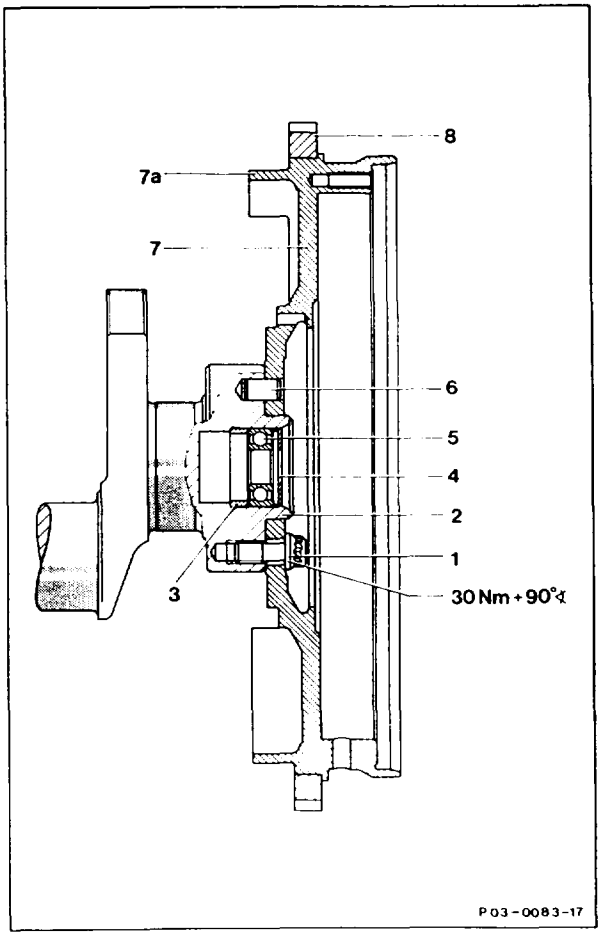

Arrangement with manual transmission

1 Stretch bolt M10 × 1 × 22
2 Crankshaft
3 Spacer ring
4 Closing cover
5 Grooved ball bearing
6 Dowel pin
7 Flywheel
7a Segment
8 Ring gear

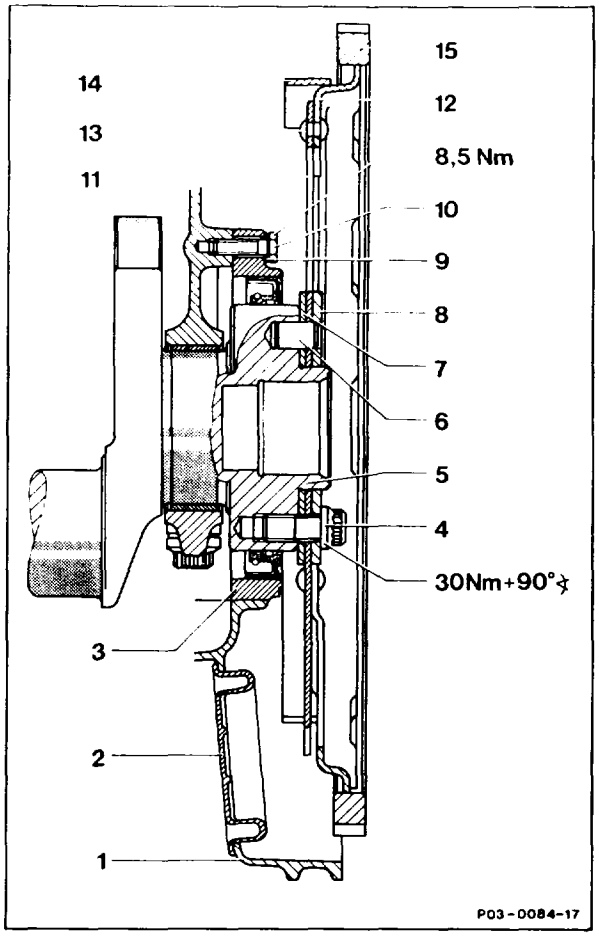

Arrangement with automatic transmission

1	Oil sump
2	Cover
3	Closing cover with radial seal
4	Stretch bolt M10 × 1 × 22
5	Crankshaft
6	Dowel pin
7	Disc 2.6 mm (stuck on)
8	Disc 3.5 mm
9	Washer
10	Bolt
11	Driven plate
12	Ring for ring gear
13	Rivet
14	Segment
15	Ring gear

03–4200 Machining flywheel (except two-mass flywheel)

Preceding work:
Flywheel removed (03-4100).

Operation no. of operation texts and work units or standard texts and flat rates
03–8022

Engine		103.98	103.94
Distance a		25.4 + 0.2	19.4 ± 0.1
Distance b	when new	15.2 ± 0.4	16.6 ± 0.4
	for repairs up to	14.2 ± 0.4	15.6 ± 0.4
Permissible variation in concentricity of clutch face or clutch flange face		0.05	0.05

Flywheels for manual transmission which have scorch points, scoring or cracking in the clutch face should be machined by precision-turning.

If the grooves or cracks are deeper than the maximum permissible stock removal, the flywheel must be renewed.

If the clutch face "A" is machined, the mounting face "B" must also be machined by the same amount in order to maintain the distance "a".

Size "b" must be maintained as a minimum size when performing repairs.

The flywheel must be properly clamped for machining to ensure that the permissible variation in concentricity of 0.05 mm is not exceeded.

Following machining, the clutch face must not have any shrinkholes or chatter marks.

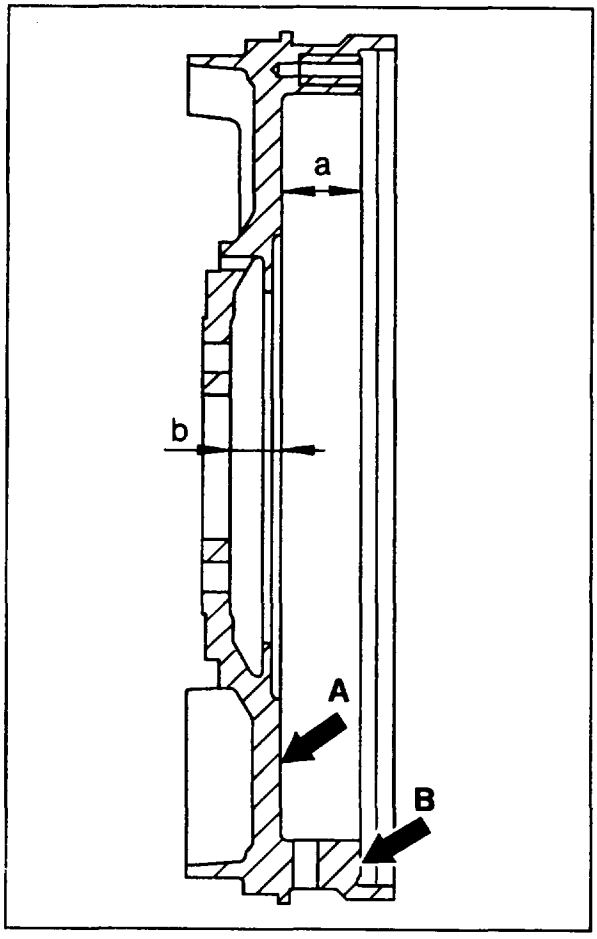

P03-5356-17

03–4300 Replacing ring gear

Preceding work:
Flywheel removed (03-4100).

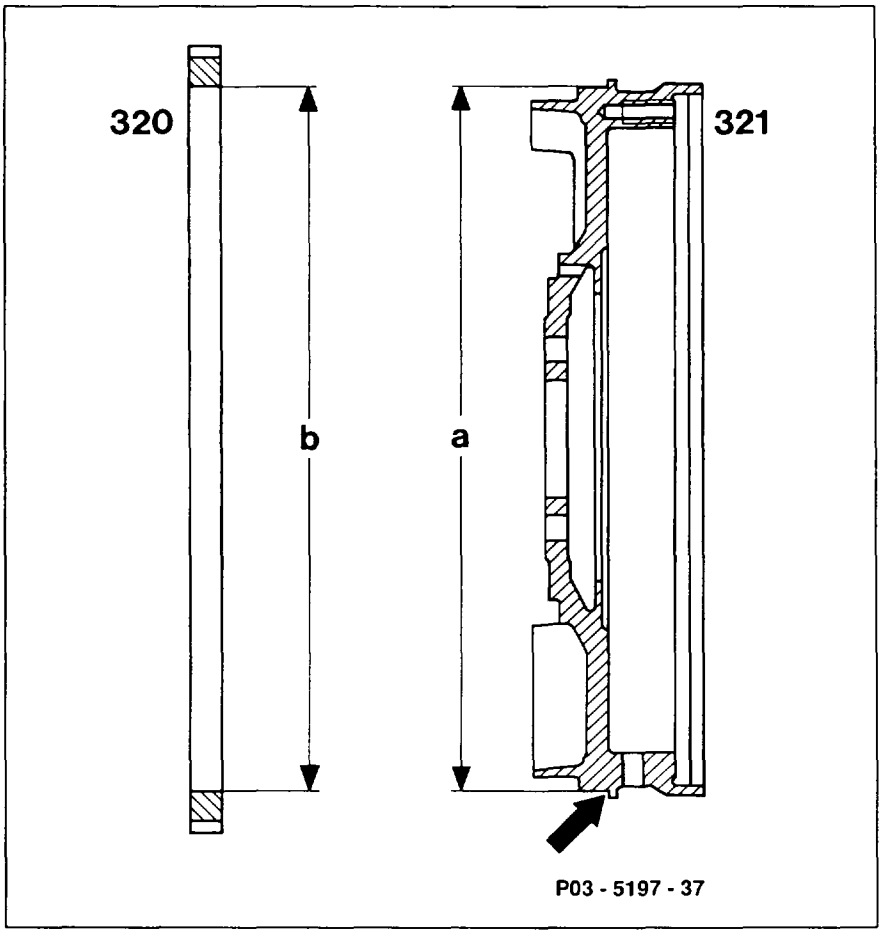

Flywheel and two-mass flywheel

Ring gear (old)	drill and snap with a chisel or heat rapidly and remove immediately.
Contact surface of ring gear on flywheel (321)	clean.
Centering collar dia. (a) on flywheel (321) and ring gear ID (b)	measure.
New ring gear (320)	heat to 200 °C.
Temperature measuring chalk	use. Pay attention to note.
Ring gear (320)	fit immediately onto flywheel (321) flush.
The ring gear must be touching the contact surface (arrow) on the flywheel (321)	all round.

Data

Permissible deviation at ring gear	axial runout	0.4 mm
	radial runout	0.3 mm
Centering collar dia. for ring gear (a)		275.32 – 275.40 mm
Ring gear ID (b) (when new)		275.00 – 275.05 mm
Shrink-fit temperature		max. 200 °C

Commercially available accessories

Temperature measuring chalk Color no. 2815/220 (white) Thermochrom	eg. AW Faber-Castell D–90547 Stein bei Nürnberg

Note

The ring gear is hardened. In order not to impair the hardening, a maximum temperature of 200 °C must not be exceeded at any point of the ring gear when it is heated. This can only be reliably achieved with the heating plate or with an oven. A flame may only be used in exceptional cases. The flame should only touch the inside of the ring gear.
The ring gear of the two-mass flywheel is shrink-fitted onto the primary flywheel mass.

After replacing a ring gear, the flywheel does not need to be balanced.

Automatic transmission:
The driven plate (11) is riveted to the ring for the ring gear (12). The ring gear (15) is welded to the ring for the ring gear (12). This unit is balanced individually and can be replaced without balancing (03-4100).

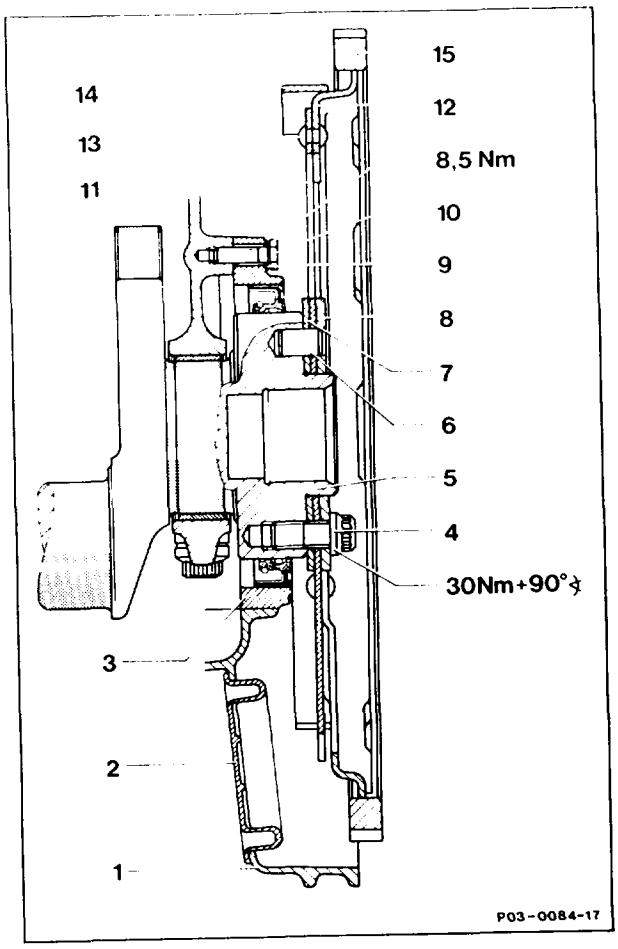

Layout on automatic transmission

1	Oil sump
2	Cover
3	End cover with radial seal
4	M10 × 1 × 22 stretch bolt
5	Crankshaft
6	Dowel pin
7	2.6 mm disk (glued on)
8	3.5 mm disk
9	Disk
10	Bolt
11	Driven plate
12	Ring for ring gear
13	Rivet
14	Segment
15	Ring gear

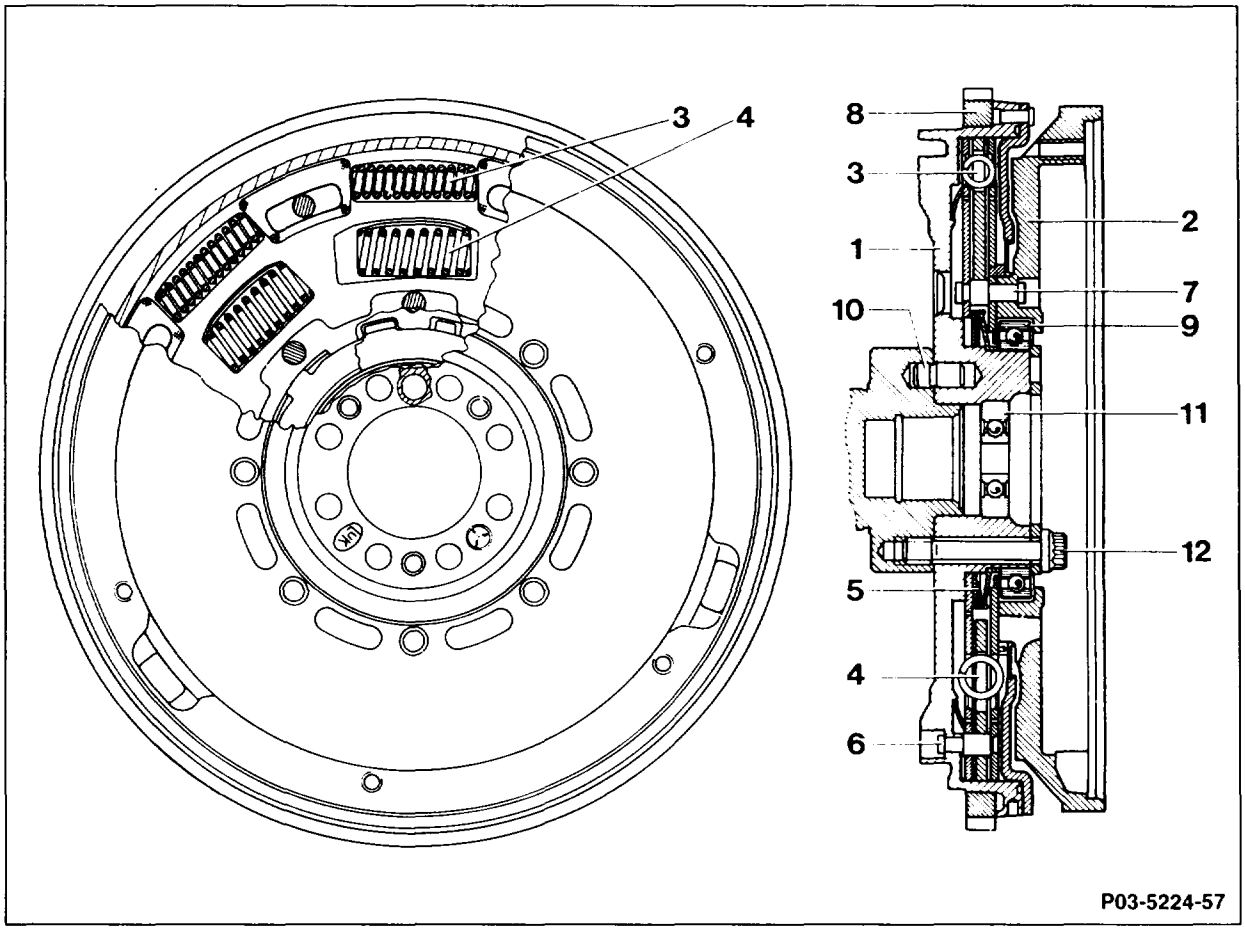

1	Primary flywheel mass	7	Spacer pin secondary flywheel mass/damper system
2	Secondary flywheel mass	8	Ring gear
3	Outer spring damper	9	Grooved ball bearing
4	Inner spring damper	10	Dowel pin
5	Friction device	11	Grooved ball bearing
6	Spacer pin primary flywheel mass/damper system	12	Stretch bolt

Design

The two-mass flywheel consists of three principal parts:

Primary flywheel mass (1)

The primary flywheel mass is bolted to the crankshaft by 8 M10 × 1 × 57 stretch bolts.

The grooved ball bearing for mounting the transmission input shaft, is placed in the primary flywheel mass. The starter ring gear is shrink-fitted on the outside.

Secondary flywheel mass (2)
The secondary flywheel mass is pivoted on the primary flywheel mass and rotates by means of a grooved ball bearing.
The clutch is mounted on the secondary flywheel mass.

Damper system
The damper system is installed between the two flywheel masses. It consists of an inner and an outer spring damper and friction devices. The rotational range of the flywheel masses to each other is limited by the damper system to ± 15° and ± 40°, respectively.
Each flywheel mass is connected to the damper system with riveted spacer pins.

Function
The two-mass flywheel absorbs the rotational vibrations of the crank assembly and reduces the transmission of these vibrations to the transmission-propeller shaft area.
Ride comfort in the lower rpm range is improved.
As a result of the different distribution of the moments of inertia of the primary and secondary flywheel mass, critical vibrations are not active below idle speed.
The primary flywheel mass is bolted to the crankshaft and connected to the secondary flywheel mass by spacer pins.
The torsion and friction system located between the two has a damping effect on residual vibrations.

03–4620 Removing and installing two-mass flywheel

Preceding work:
Manual transmission removed (26–020).
Clutch removed (25–050).
Holding lock for crankshaft/ring gear installed (03–5000)

Operation no. of operation texts and work units or standard texts and flat rates

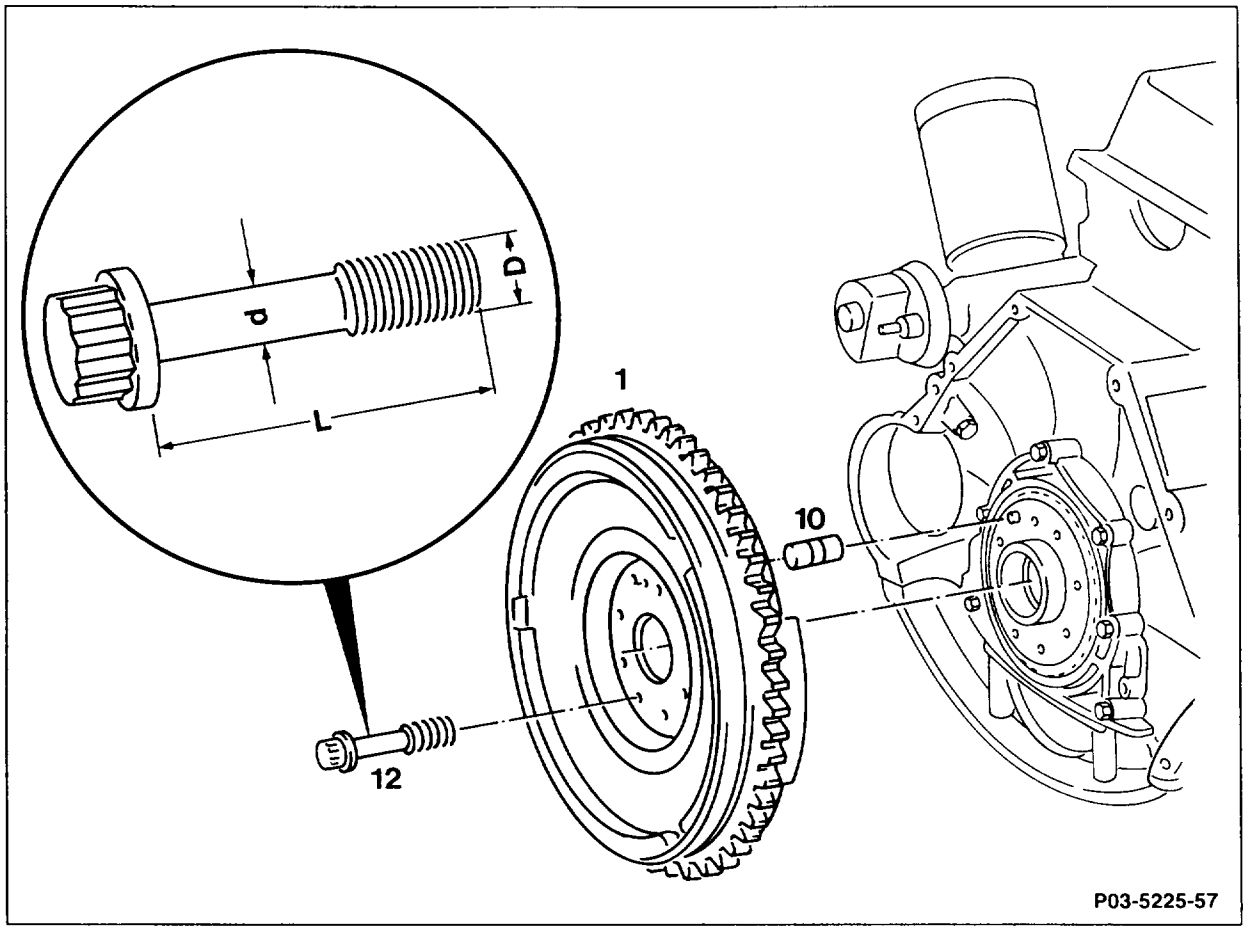

Stretch bolts (12)	unscrew, screw on.
Stretch bolts (12)	check, see table.
Stretch shaft below minimum dia. (d)	replace stretch bolt (12).
Two-mass flywheel (1)	remove, install.
Dowel pin (10)	note.

Data

Thread (D)			M10 × 1
Stretch shaft dia. (d)		when new	8.5 – 0.2
		minimum dia.	8.1
Bolt length (L)		when new	57 ± 0.2
Tightening torque	Initial torque	40 Nm + 90° tightening angle	

Special tool

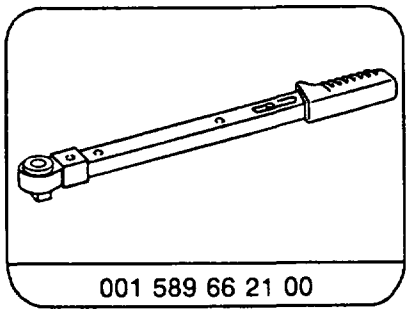

001 589 66 21 00

Note

If no angle of rotation torque wrench is available, the stretch bolts can be torqued further by the specified angle with a wrench socket and lever in a single operation. To eliminate angularity errors, do not use a bending rod torque wrench for tightening to angle of rotation torque.

Design of two-mass flywheel, see "Function of two-mass flywheel (03-4600)".

The two-mass flywheel must not be treated with preservation agents.

Reconditioned engines for the two-mass version are supplied only in the automatic transmission version.

The two-mass flywheel from the old engine should be used or replaced, if damaged.

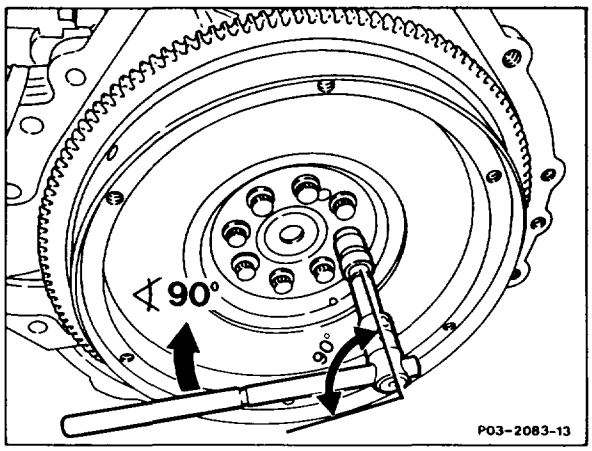

⚠

The two-mass flywheel cannot be serviced and is supplied as a replacement part.

Two-mass flywheel, production breakpoint: 08/1989

Model	Engine	Engine end no.		Vehicle ident end no.	
		manual transmission	automatic transmission	A	F
124.026	103.940	026999	–	027793	*
124.030 124.050 124.090	103.983	031824	–	033313	124129
124.226	103.943	000447	–	069100	*
124.230 124.290	103.985	002138	–	037643	124011
129.060	103.984	Start of series production	–		
201.029	103.942	014907	–	508036	640695
463.2	103.987	Start of series production	–		

Two-mass flywheel with super wide angle damping, production breakpoint: 07/1991

Model	Engine	Engine end no.		Vehicle ident end no.	
		manual transmission	automatic transmission	A	F
124.026	103.940	036032	–	–	–
201.029	103.942	019743	–	–	–
124.030 124.050 124.090	103.983	043968	–	–	–
129.060	103.984	000736	–	–	–
463.2	103.987	000854	–	–	–

03–4640 Removing and installing needle bush in two-mass flywheel

Preceding work:
Two-mass flywheel removed (03-4620).

Operation no. of operation texts and work units or standard texts and flat rates

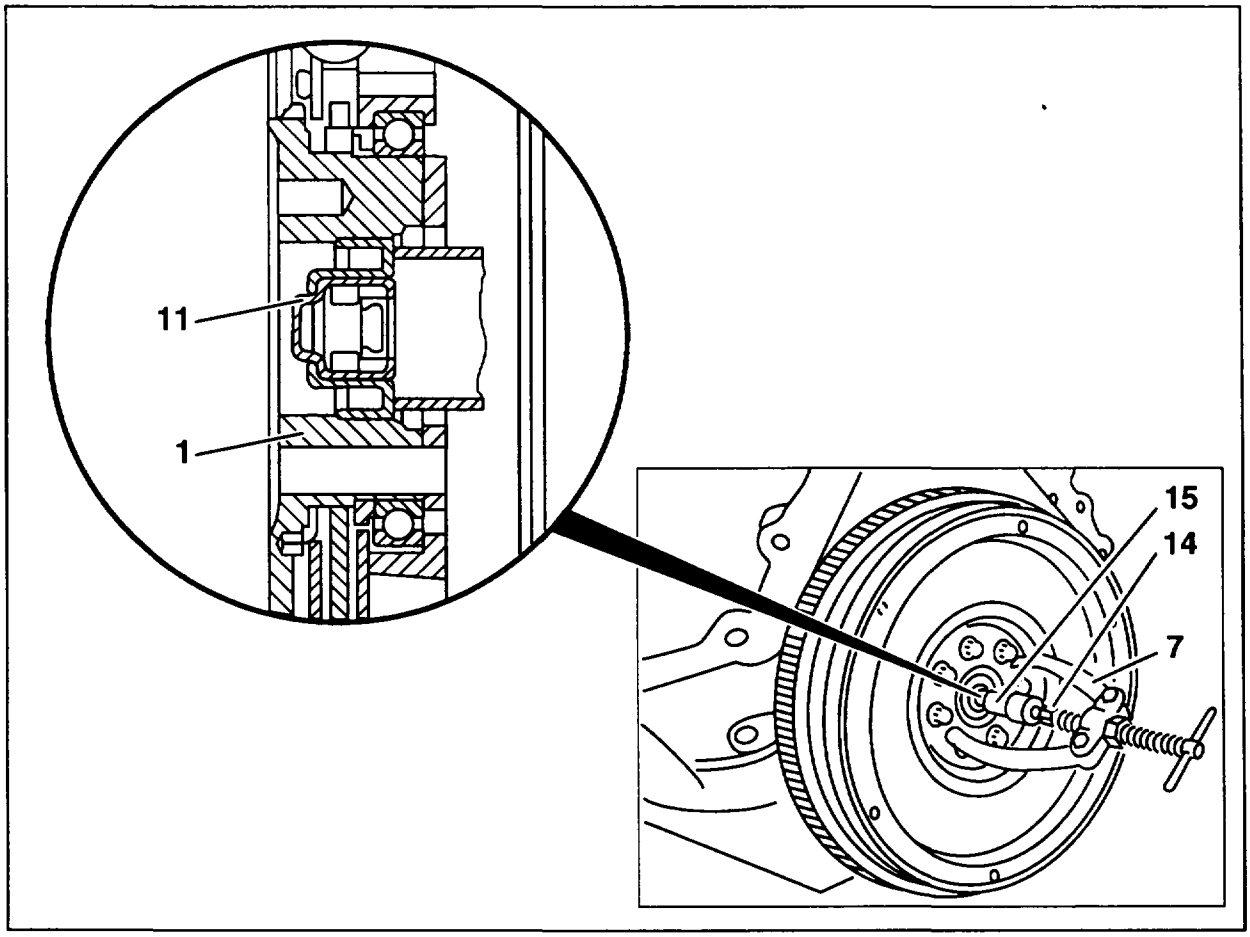

P03-5352-57

Puller (7) 000 589 33 33 00 with insert (15)

000 529 25 33 00 (11)	place onto needle bush (11)
Nut (14)	turn, spread taper apart
Needle bush (11)	pull out

New needle bush (11) with Ø 45 mm sleeve . . .	press in at outer race as far as a stop
	⚠ Press needle bush (11) in, do not knock in. Use Ø 14.8 mm securing drift to prevent bearing rollers dropping out.
Needle bush (11)	check that it is tightly located at outer race in primary flywheel mass (1)

Data in mm

Mounting bore Ø in two-mass flywheel	46.96 – 49.98

Special tools

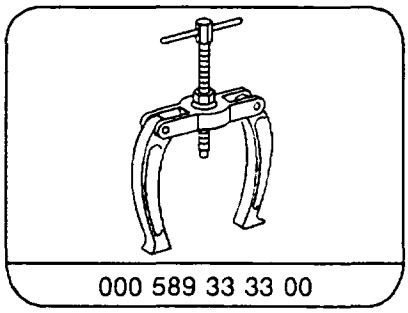

000 589 33 33 00

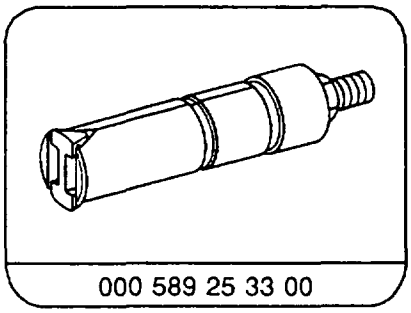

000 589 25 33 00

03–5000 Removing and installing holding lock for crankshaft/ring gear

Preceding work:
Bottom engine compartment panel removed
(Maintenance Manual Volume 2, Op. no. 6190).

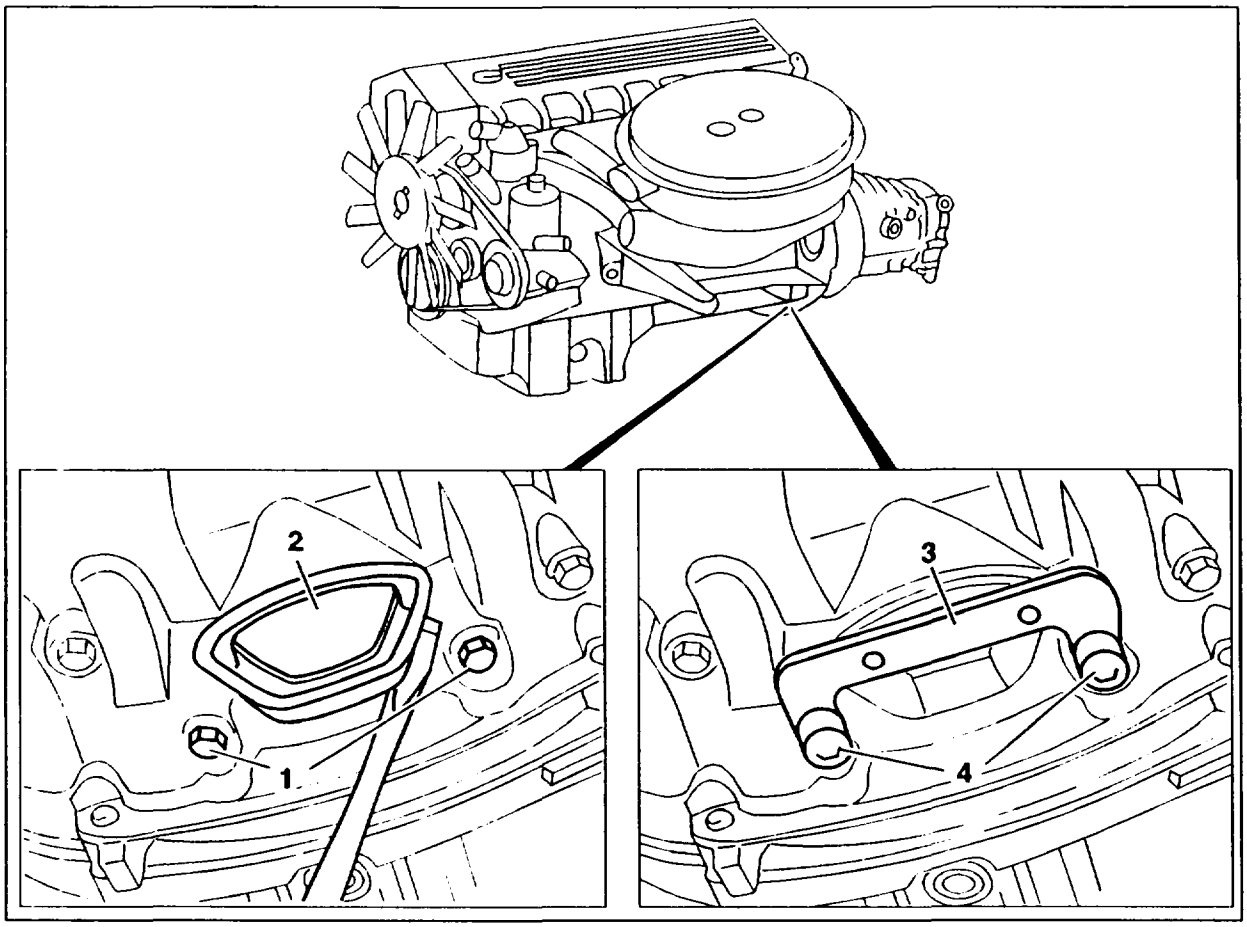

P03-5355-57

Plastic cap (2) on rear of sump	take off, fit on.
M6 × 85 bolts (1)	unscrew, screw on (10 Nm).
Holding lock (3) 601 589 02 40 00	allow to engage in ring gear, rotate crankshaft if necessary.
Holding lock (3)	unscrew, screw on (10 Nm).

⚠

Bolt on holding lock (3) with M6 × 90 bolts (4) (part of special tool) otherwise the threads in the rear end cover will be damaged.

05–2110 Checking and replacing hydraulic valve clearance compensating elements

Preceding work:
Warm engine up to operating temperature (80 °C)
Cylinder head cover removed (01–0500).

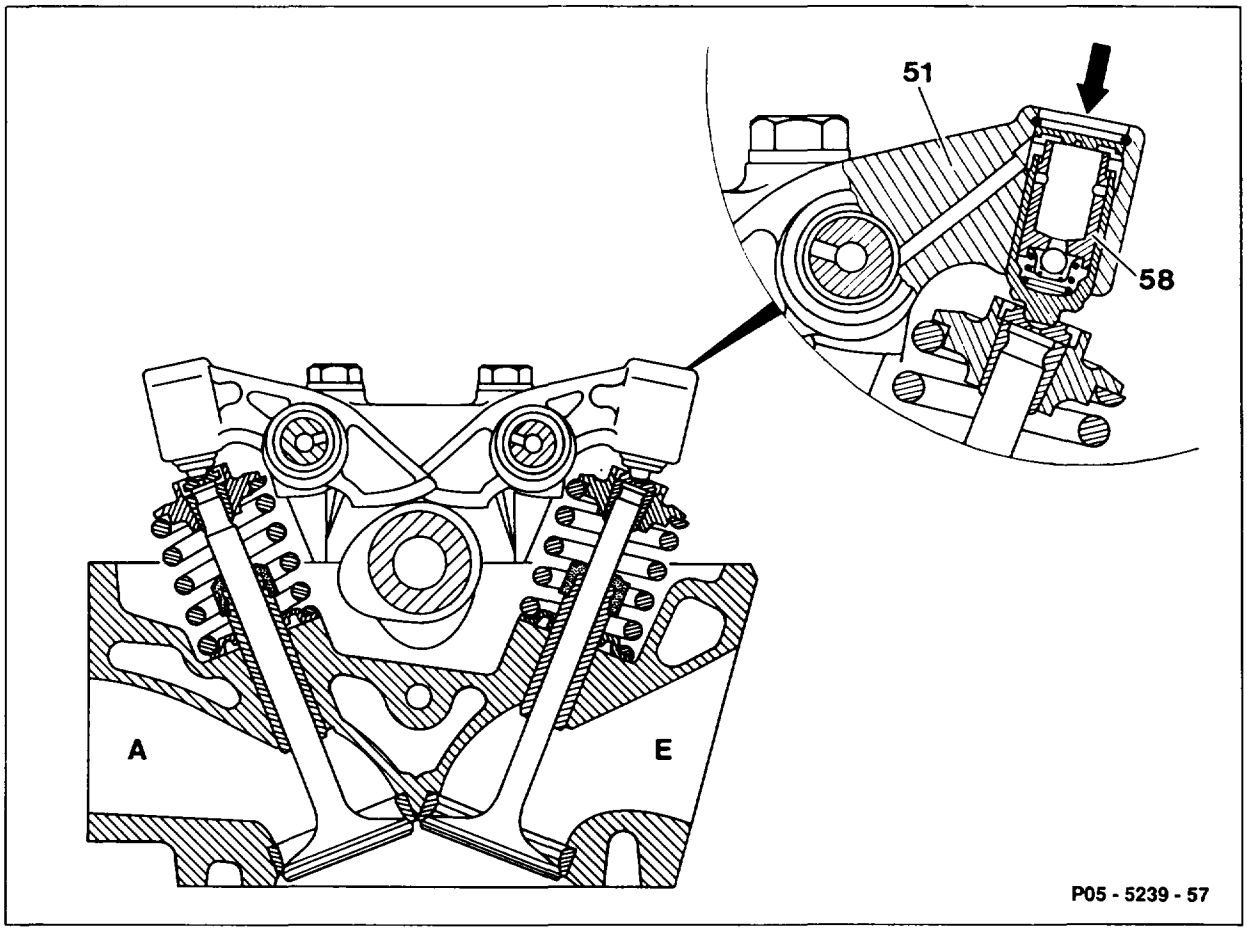

Checking (compensating element installed)

Crankshaft	rotate and position cam of compensating element (58) to be checked to base circle.
Hydraulic compensating element (58)	apply load with handle of hammer or similar for approx. 5 – 10 seconds (arrow).

⚠
Do not press valves against piston when testing pressure.
If compensating element (58) drops, there is a leak on the inside and it must be replaced.
Remove relevant camshaft bearing cap (05–2320).

If compensating element (58) does not drop, ... check play between compensating element (58) and rocker arm (51) by hand.

If play exists between hard compensating element (58) and rocker arm (51), ... check basic position of compensating element (05-2130).

Camshaft bearing cap ..... remove (05-2320).

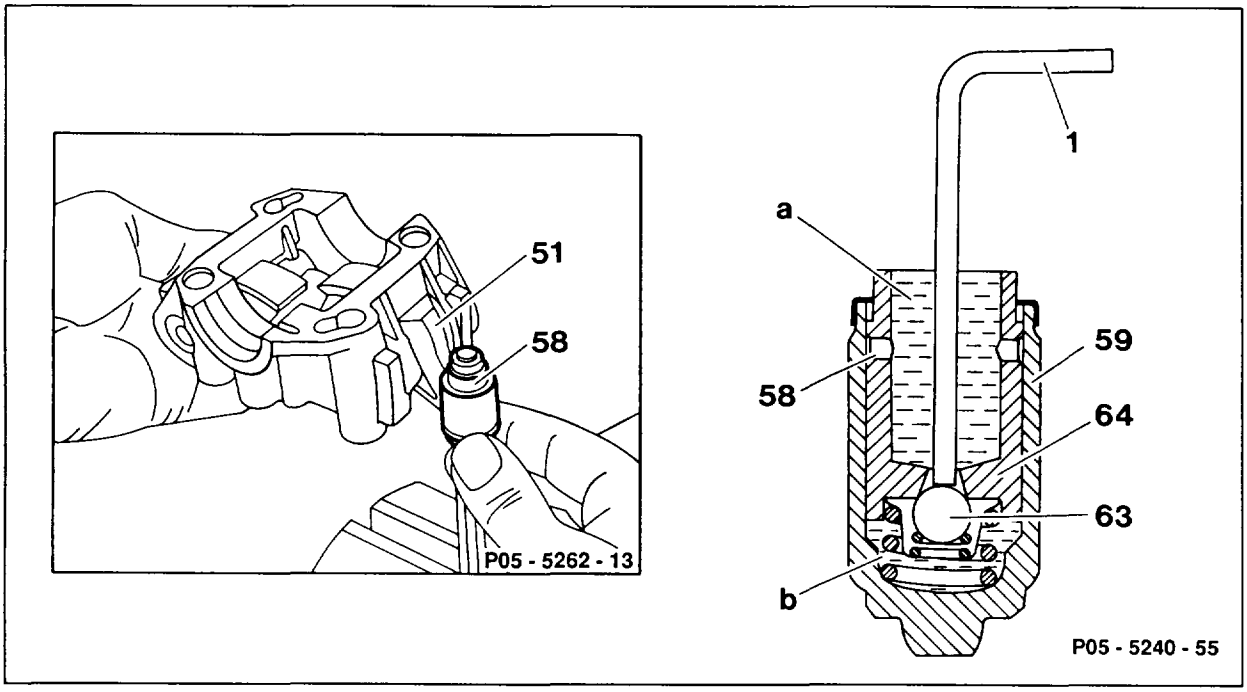

Checking (compensating element removed)

Compensating element (58) ..... press out of rocker arm (51) with washer using aluminium or brass drift.

Compensating element (58) ..... position vertical.

Oil supply chamber (a) ..... fill with engine oil.

Ball valve (63) ..... open with wire (1) (dia. approx. 1.5 mm).

Pressure pin (64) ..... push down as far as stop and release. Repeat operation as often as necessary until working chamber (b) is filled with engine oil.

Pressure pin (64) of vertical compensating element (58) ..... press down firmly with handle of hammer or similar for approx. 10 seconds.

If pressure pin (64) drops, replace ..... compensating element (58).

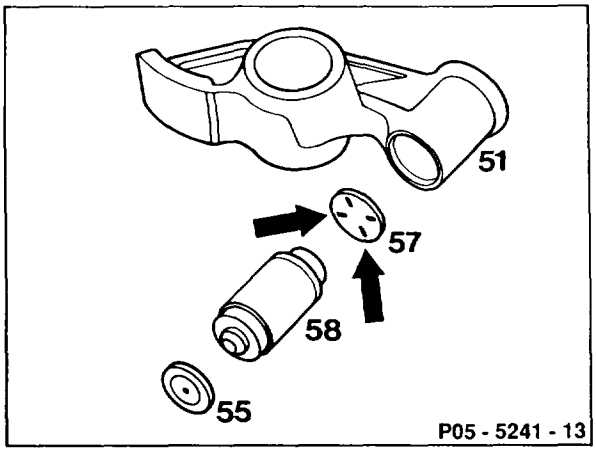

Replacing

Washer (57) and compensating element (58) . . .	push into rocker arm (51) until it touches snap ring.
Grooves (arrow) of washer (57)	must be facing compensating element (58).
Rocker arm bearing bracket with ball socket (55)	install (05–2190).
Basic position of hydraulic compensating element	check (05–2130).

Note

If the compensating elements do not drop, check whether oil drillings in cylinder head in rocker arm bearing bracket, rocker arm shaft and rocker arm are clear.
Clean oil drillings if necessary.
If several compensating elements are soft, check whether oil nozzle return lock in cylinder head is tightly seated, replace if necessary (18–4150).
Adjust oil to correct level (oil foaming).

05–2130 Checking basic position of hydraulic compensating elements

Preceding work:
Fan shroud removed (20–3400).
Cylinder head cover removed (01–0500).

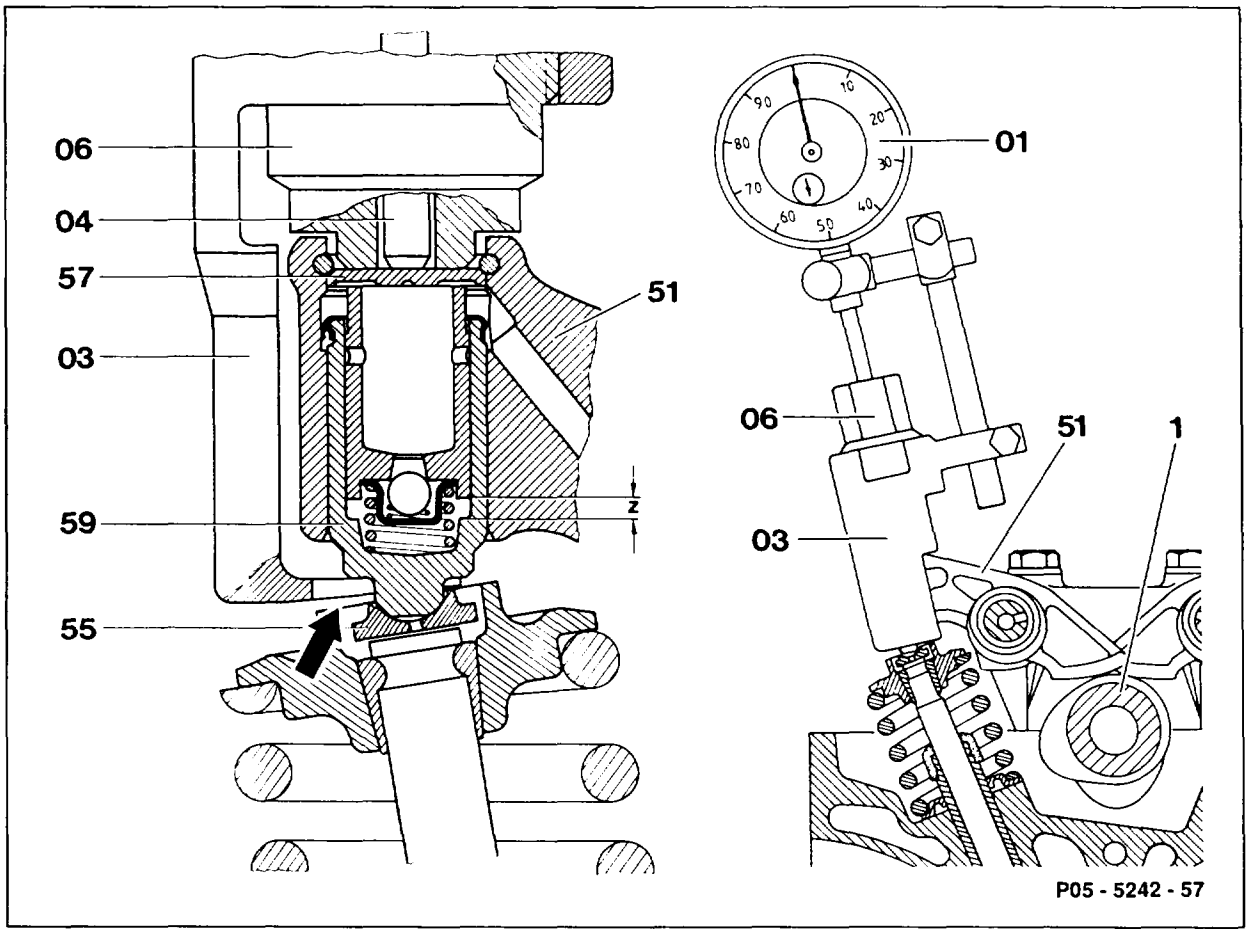

Crankshaft ..... rotate and position cam (1) of compensating element to be checked to base circle.

Pronged sleeve (03) of measuring device 102 589 04 21 00 ..... position at guide sleeve (59) of compensating element (arrow).

Hexagon head of thrust piece (06) ..... screw in by hand until it touches the washer (57).

Note
The thrust piece (06) must be touching the washer (57) of the compensating element and not the rocker arm (51) otherwise the residual stroke (z) measured will be incorrect.

Dial gauge (01) with measuring pin (04)	insert into measuring device.
Dial gauge (01)	clamp in measuring device with preload of 5 mm.
Large pointer of dial gauge	set to "0".
Hexagon head of thrust piece (06)	screw in with wrench until residual stroke (z) is eliminated.
Residual stroke (z) (adjustment)	read off on dial gauge (01), note.
Residual stroke must be between	0.5 – 2.4 mm.
If residual stroke is greater or less, ...	adjust basic position of hydraulic compensating elements (05–2140).

⚠
Stretched inlet valves may produce a residual stroke of less than 0.5 mm!

Special tools

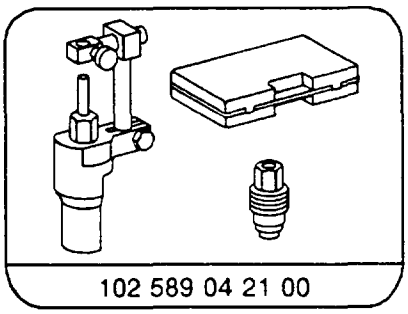
102 589 04 21 00

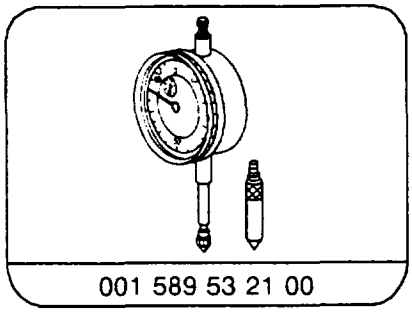
001 589 53 21 00

Note

The installation position of the hydraulic valve compensating elements must be checked:

- If valve gear is noisy and no operating fault of compensating element exists (05–2110).
- If valves and valve seat rings have been machined.

The compensating elements must be filled with engine oil for checking.

05–2140 Adjusting basic setting of hydraulic compensating elements

Preceding work:
Basic position of hydraulic compensating elements checked (05–2130).
Camshaft bearing caps removed (05–2190).

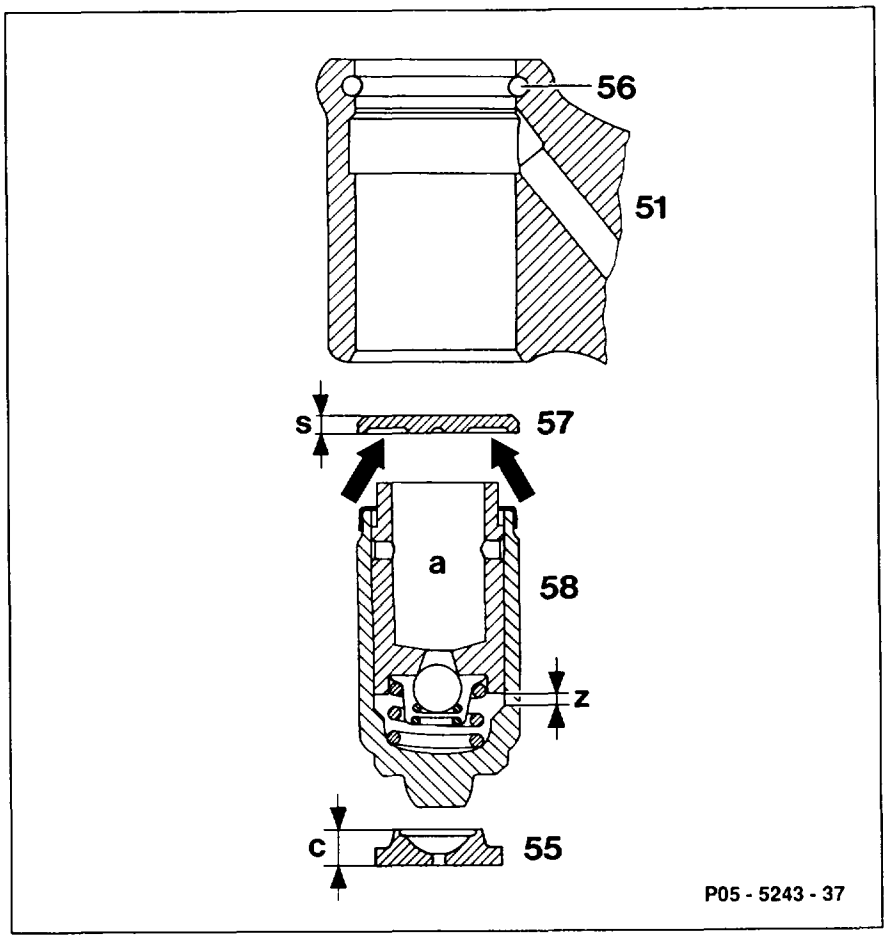

Compensating element (58) together with the washer (57) . . . . . press out of rocker arm (51) with a aluminium or brass drift.

Corresponding washer (57) with size (s) . . . . . match to checked size of residual stroke (z), specification 0.5 – 2.4 mm

Matched washer (57) with compensating element (58) . . . . . insert into rocker arm (51) until it touches snap ring (56)

Installation note
The grooves (arrows) of the washer (57) must face the compensating element (58). Fill chamber (a) of compensating element (58) with engine oil before installing.

If the residual stroke (z) cannot be reduced with the existing washers (57), ... adjust residual stroke (z) additionally withthicker ball socket (55).

Rocker arm bearing bracket ..... install (05–2320).

Engine ..... crank with starter.

Basic setting of hydraulic compensating elements ..... check (05–2130).

Data, washer and ball socket

Washer (57)		Ball socket (55)	
Size "s" mm	Part no.	Size "c"	Part no.
1.5	103 055 07 76	3.0	103 055 00 24
1.8	103 055 06 76	3.5	103 055 02 24
2.2	103 055 09 76		

05–2150 Checking camshaft timing

Preceding work:
Cylinder head cover removed (01–0500).
Spark plugs removed (15–1031).

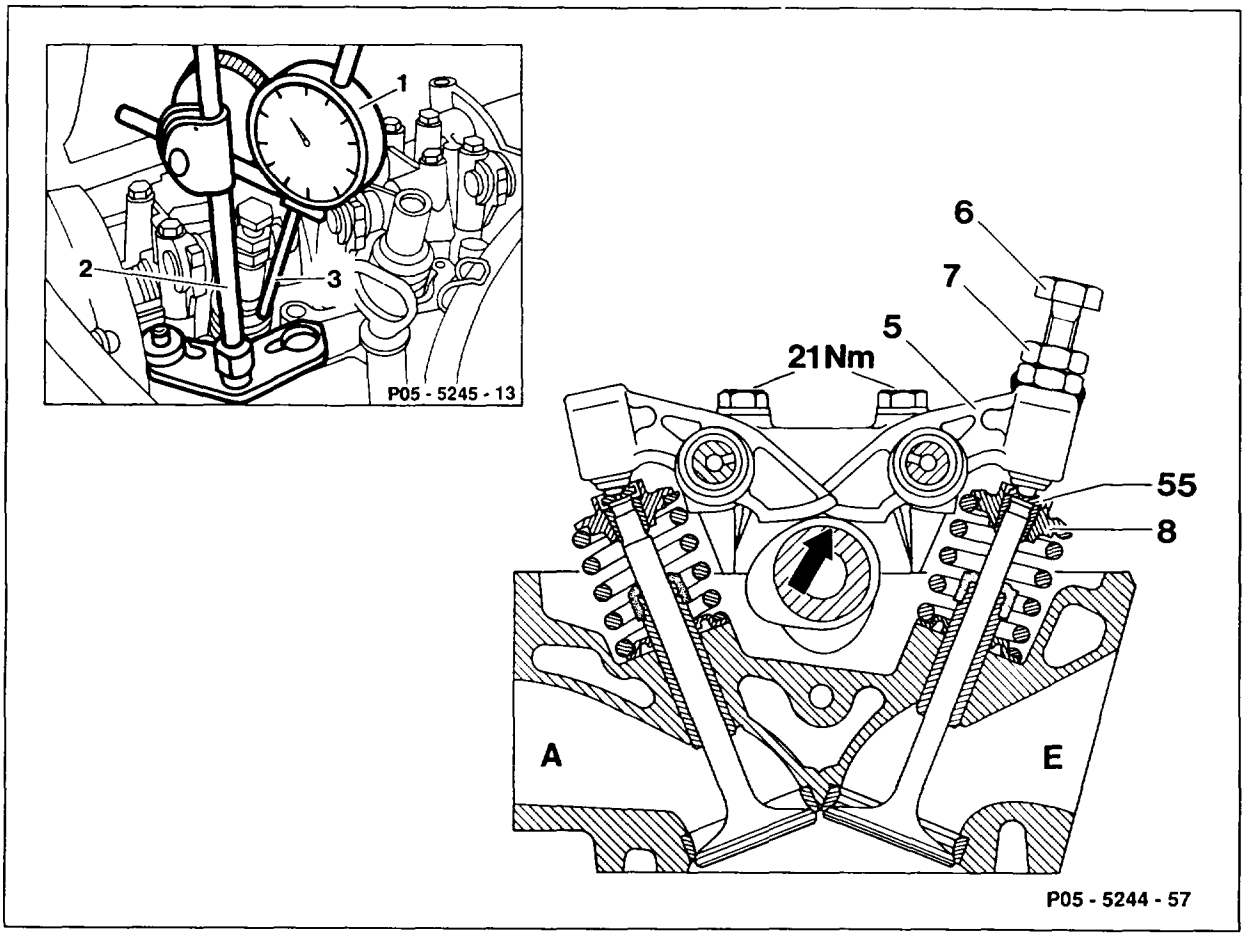

Inlet cam at cylinder 1	position so that only base circle (arrow) is resting against rocker arm (5).
To do this:	
Crankshaft	rotate in direction of rotation of engine with size 27 hexagon socket and torque wrench 000 589 10 99 01.
Camshaft code number	check (see note).
Rocker arm at inlet valve of cylinder 1	remove (05–2230).
Rocker arm (5) with ball socket (55)	install (see shop-made tool).
Setting bolt (6)	turn to eliminate valve clearance.
Setting bolt (6)	secure with locking nut (7).
Dial gauge holder (2) 136 589 04 21 00	fit onto cylinder head.
Dial gauge (1) with tracer pin (3)	insert into dial gauge holder (2).

Tracer pin (3)	set on valve spring retainer (8) vertically and with a preload of 3 mm.
Large pointer of dial gauge (1)	set to "0".
Crankshaft	rotate in direction of rotation of engine.
At a valve lift of 2 mm, the value at the vibration damper must agree with the value in the table	"inlet valve opens after TDC".
Camshaft timing	adjust (05–2152).

Timing in °CA at 2 mm valve lift

Engine	Code number of front camshaft stamped in camshaft flange	Inlet valve		Exhaust valve	
		opens after TDC	closes after BDC	opens before BDC	closes before TDC
103 außer 103.984	18, 36[2]) 19[1]), 37[1])[2])	11.5°	17.0°	18.5°	13.5°
	22[3]), 42[4]), 49[5]) 23[1])[3]), 43[1])[4]), 50[1])[5])	11.5°	19.5°	21.5°	13.5°
103 983 AMG	–	15°	–	–	17°
103.94 only Belgium 115 kW	20 21[1])	16°	0.5°	19.0°	14.5°
	30[3]), 44[4]), 56[5]) 31[1])[3]), 45[1])[4]), 57[1]),[5])	6.5°	14.0°	26.5°	18.5°
103.984	53[6]) 54[1])[6])	16.5°	24°	21.5°	13.5°

[1]) Repair camshaft with 0.5 mm larger bearing diameter.
[2]) USA 1986.
[3]) Installed since 05/86 (M7 thread) for attaching camshaft sprocket.
[4]) Camshaft tin-coated, cam 1 mm wider, standard as of 10/86.
[5]) Chilled cast iron camshaft, as of 02/89 (driver mount 20 mm dia.).
[6]) 103.984 as of 03/89 (driver mount 20 mm dia.).

Special tools

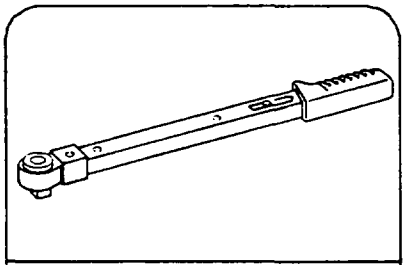

000 589 10 99 01

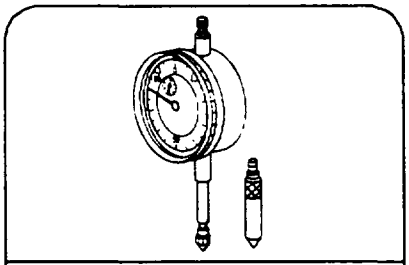

001 589 53 21 00

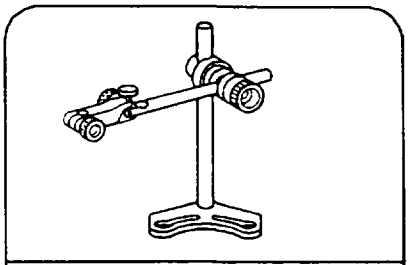

136 589 04 21 00

Shop-made tool

Rocker arm with nut welded on and setting bolt with lock nut for eliminating valve clearance.

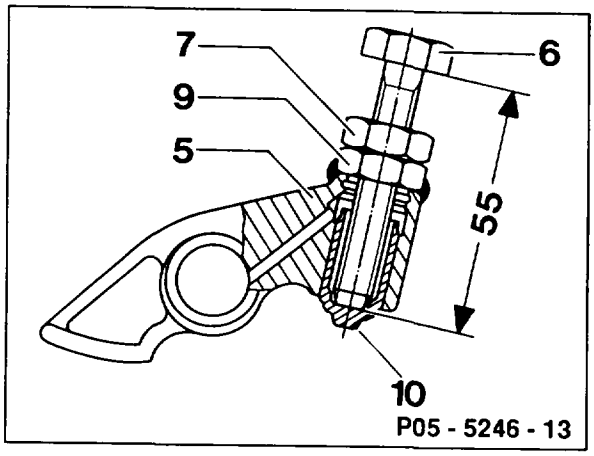

5 Rocker arm, engine 103
6 M10×55 bolt
7 M10 locking nut
9 M10 nut welded onto rocker arm
10 Compensating element guide sleeve

Notes

When performing removal and installation operations, it is sufficient to check the basic position (marking 20 and 21) of the camshaft (see 05–2230).
Re-set timing if the difference is more than 2° crank angle (05-2152).

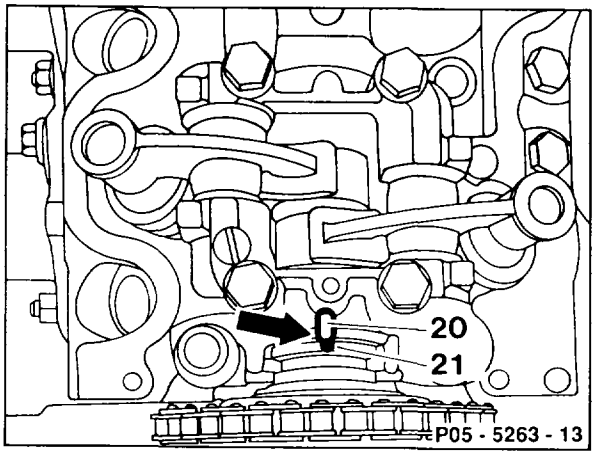

The camshaft code number is stamped in the camshaft flange (arrow).

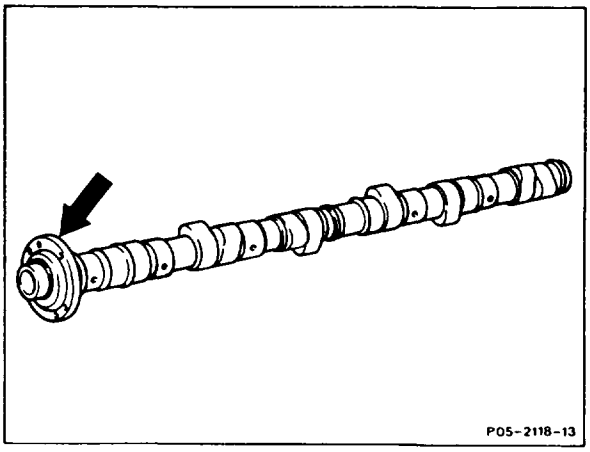

05–2152 Adjusting camshaft timing

Preceding work:
Camshaft timing checked (05–2150).
Front cover at top removed (01–2120).

Camshaft sprocket 1st version up to 10/1985 and engine 103.983 AMG

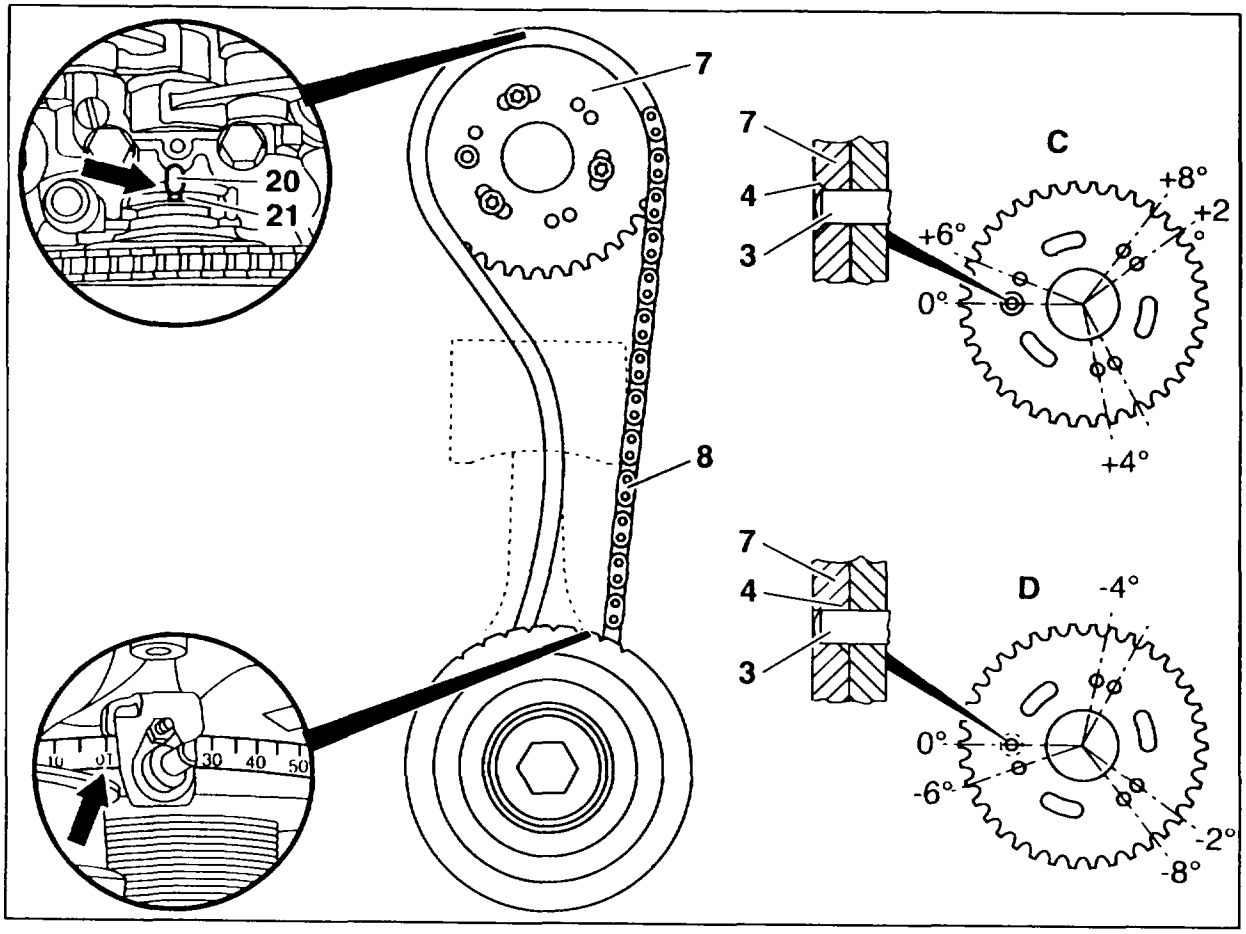

P05-5512-57

3 Locating pin in camshaft flange

4 Adjusting hole with chamfer at front, or rear for basic setting

C Timing advanced (+2°, +4°, +6°, +8°) as chamfer at adjusting hole (4) at front

D Timing retarded (−2°, −4°, −6°, −8°) as chamfer at adjusting hole (4) at rear (camshaft sprocket (7) turned)

Camshaft	rotate into basic position (05-2230)
Chain tensioner	remove (05-3100)
Camshaft sprocket (7)	unbolt, remove from camshaft (05-2200)

Adjusting timing in basic setting

Camshaft sprocket (7)	rotate until locating pin (3) engages in the hole (4) with the chamfer facing forward or to the rear

Advancing timing (+2°, +4°, +6°, +8° crank angle)

Camshaft sprocket (7)	turn so that chamfer of bore (4) is facing forward
Camshaft sprocket (7)	rotate with timing chain (8) fitted on until locating pin (3) engages in the corresponding hole (+2°, +4°, +6°, +8°)

Retarding timing (−2°, −4°, −6°, −8° crank angle)

Camshaft sprocket (7)	turn so that chamfer of hole (4) is facing to the rear
Camshaft sprocket (7)	rotate with timing chain (8) fitted on until locating pin (3) engages in the corresponding hole (−2°, −4°, −6°, −8°)
Chain tensioner	install (05-3100)
Camshaft timing	check (05-2150)

Camshaft sprocket 2nd version (as of 10/1985)

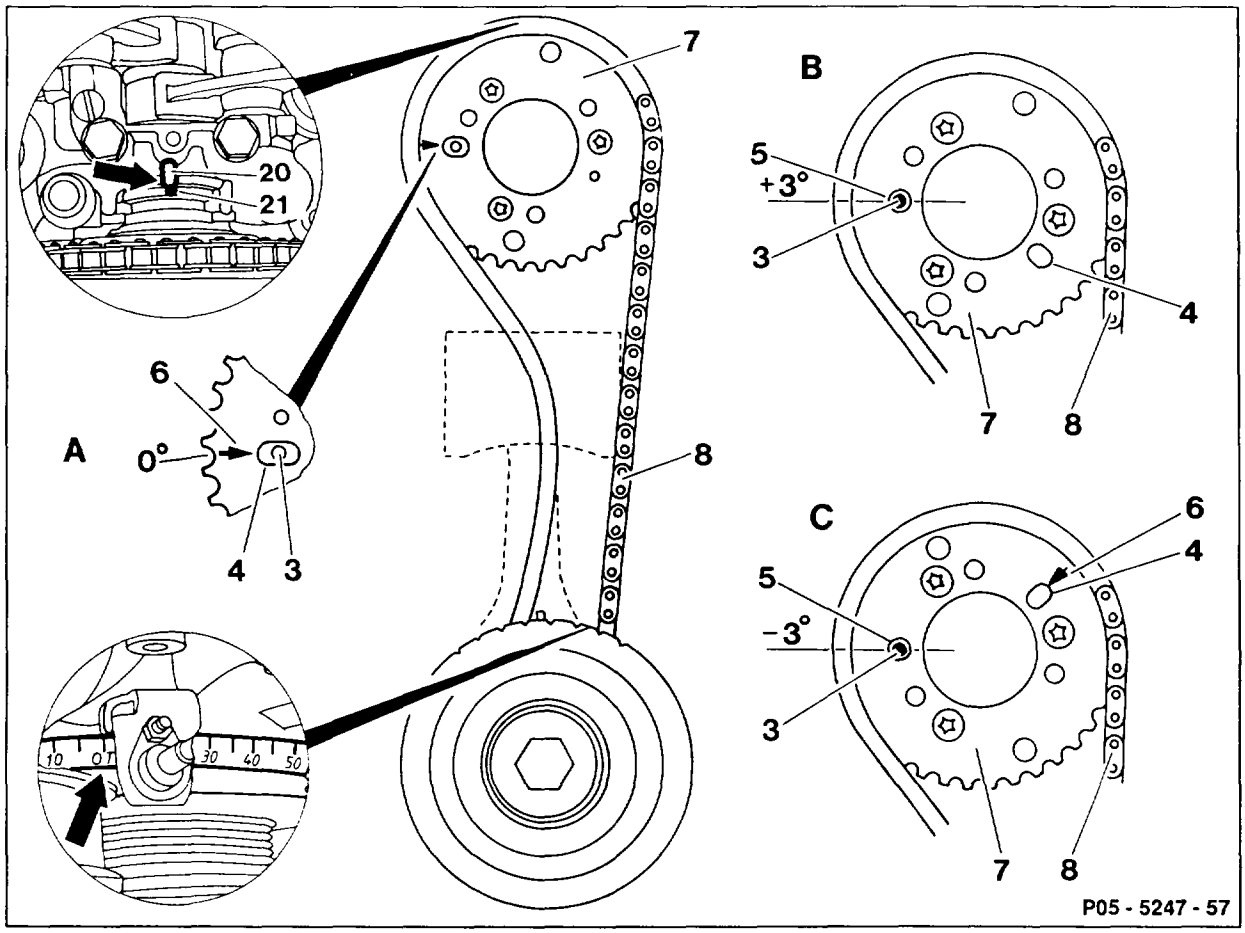

A Basic position
B Camshaft timing advanced 3°
C Camshaft timing retarded 3°

Camshaft	rotate into basic position (05–2230).
Chain tensioner	remove (05–3100).
Camshaft sprocket (7)	unscrew, remove from camshaft (05-2200).
Advancing timing by 3° crank angle (B)	
Camshaft sprocket (7)	turn (arrow (6) rear).
Camshaft sprocket (7) with timing chain (8) fitted	install, hole must engage in locating pin (3).

Retarding timing by 3° crank angle (C)

Camshaft sprocket (7) (arrow (6) front) with timing chain (8) fitted	install, hole must engage in locating pin (3).
Camshaft sprocket (7)	screw on (05-2200).
Chain tensioner	install (05–3100).
Camshaft timing	check (05–2150).

Special tool

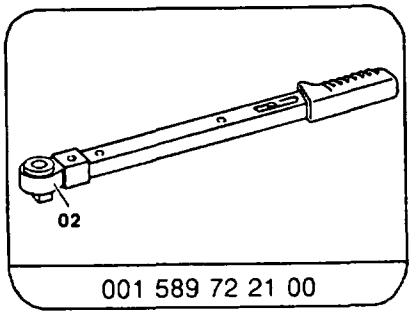

001 589 72 21 00

05–2170 Removing and installing driver on camshaft

Preceding work:
High voltage distributor removed (15-3010)

Operation no. of operation texts and work units or standard texts and flat rates

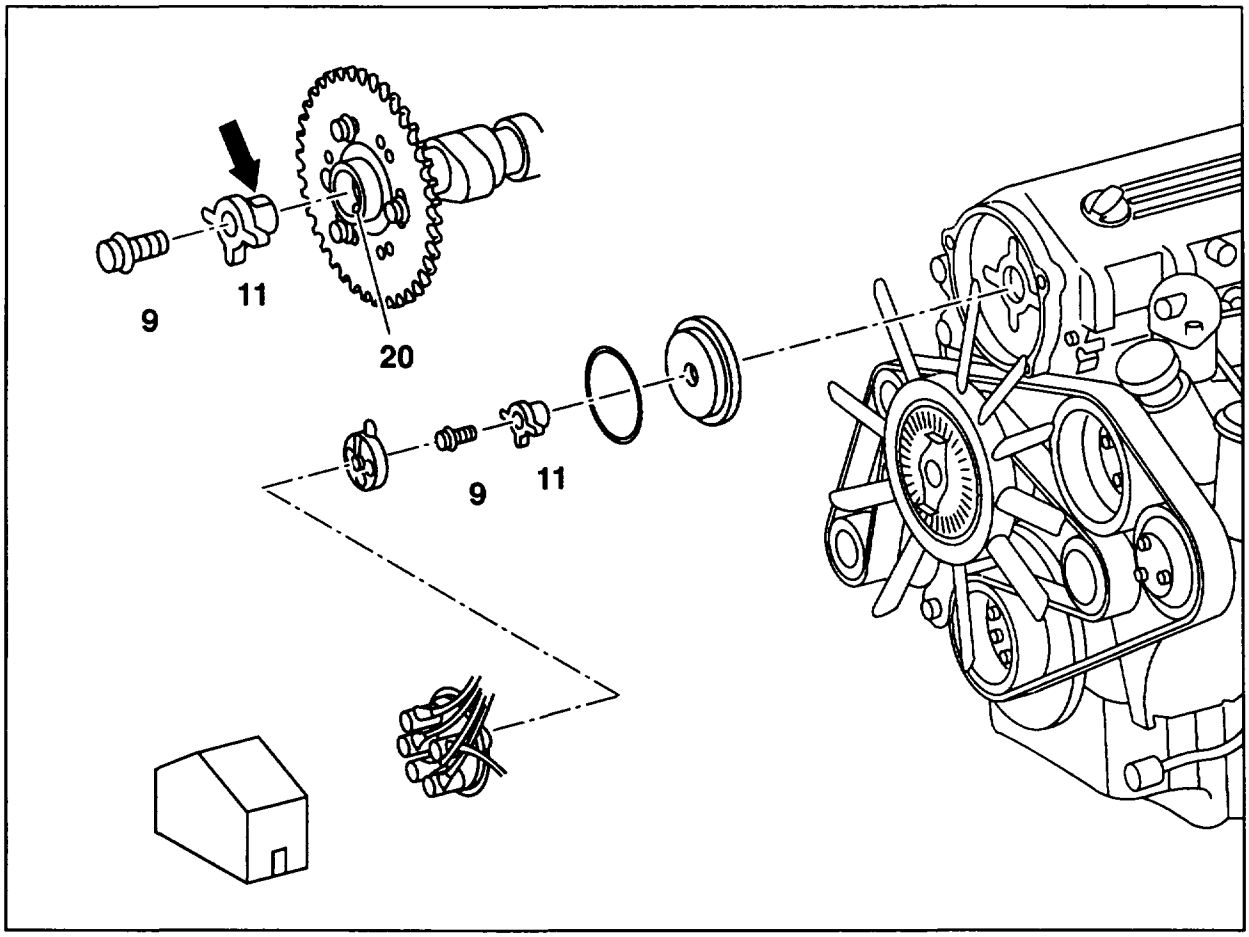

P05-5505-57

Distributor rotor (11)	unscrew, screw on.

⚠

Pay attention to tightening torques of different versions of bolts (9); see table overleaf.
Installation note: the slot (arrow) in the driver (11) must engage over the locating pin (20) in the camshaft.

Special tool

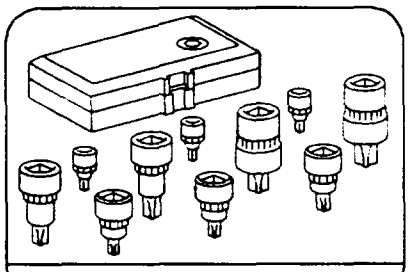

000 589 01 10 00

Driver	1st version up to 02/1989	2nd version as of 03/1989	3rd version
Material Bolt Tightening torque	Aluminium M8 × 29 21 Nm	Steel M7 × 29 (internal torx) 16 Nm	Steel M7 torx T40 16 Nm
Insertion sleeve Collar Ø	103 589 00 14 00 21.5 mm	103 589 01 14 00 20 mm	103 589 01 14 00 20 mm

05–2190 Removing and installing rocker arm bearing bracket

Preceding work:
Camshaft oil pipe removed (18–4200).

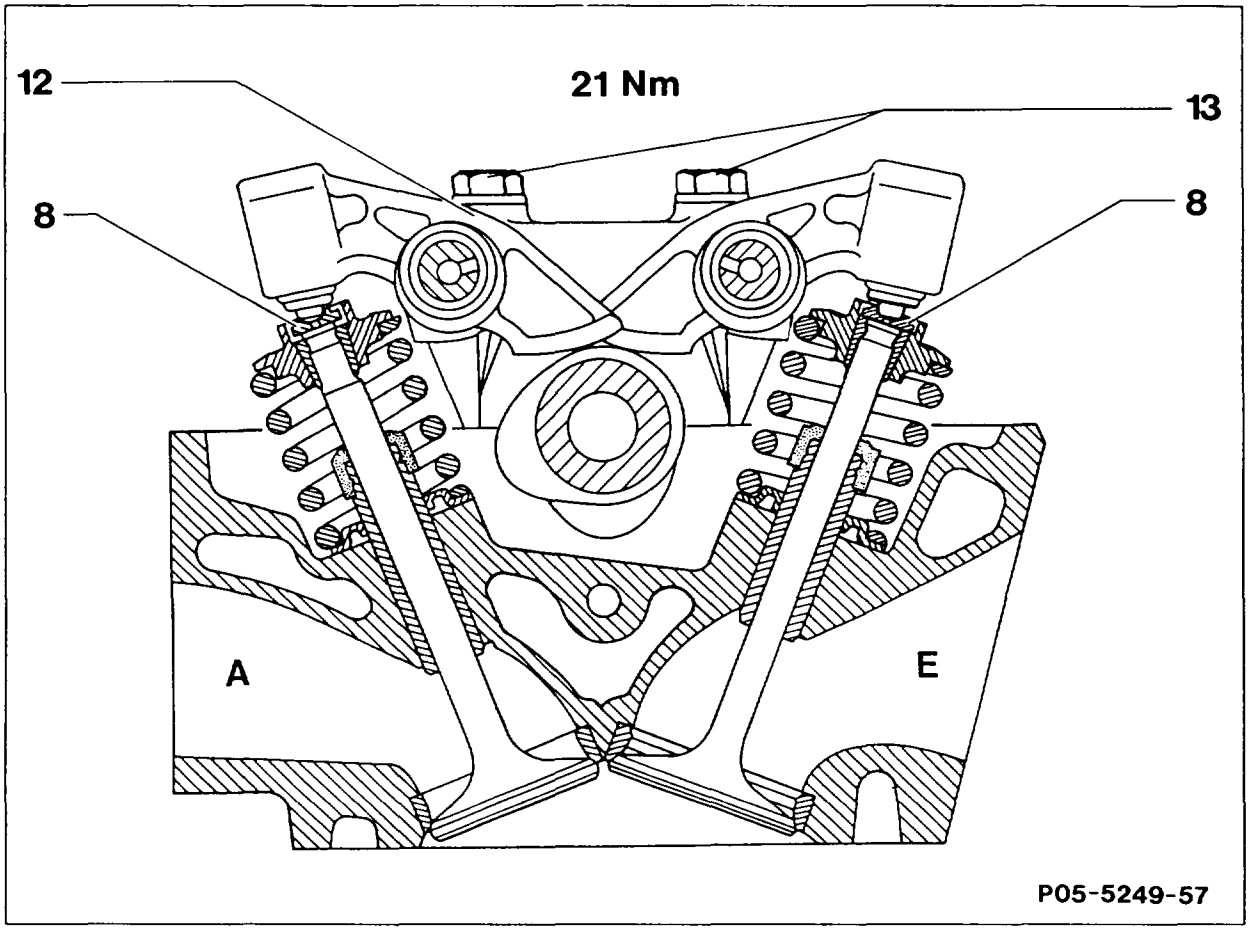

Crankshaft or camshaft	rotate until the camshaft base circles are resting on the rocker arms.
Bolts (13)	unscrew, screw on (15 Nm).
Camshaft bearing cap (12)	remove, install at the same point; see note. Use a plastic-headed hammer to detach tight camshaft bearing caps. Pay attention to dowel sleeves.

⚠

Pay attention to ball sockets (8); re-install at the same point.
Replace M8×70 bolts (12) by M8×73 10.9 bolts

Special tool

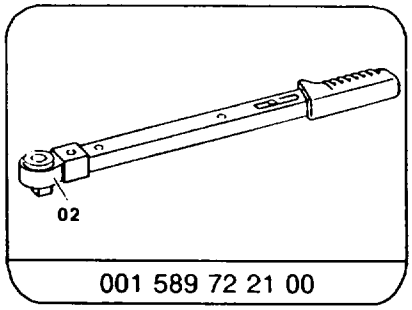

001 589 72 21 00

Note

The camshaft runs in 7 bearing points in the cylinder head and is bolted with 6 bearing brackets.
The front bearing bracket has two bearing points and two retaining lugs.
The retaining lugs are designed to fix the thrust washer of the camshaft.

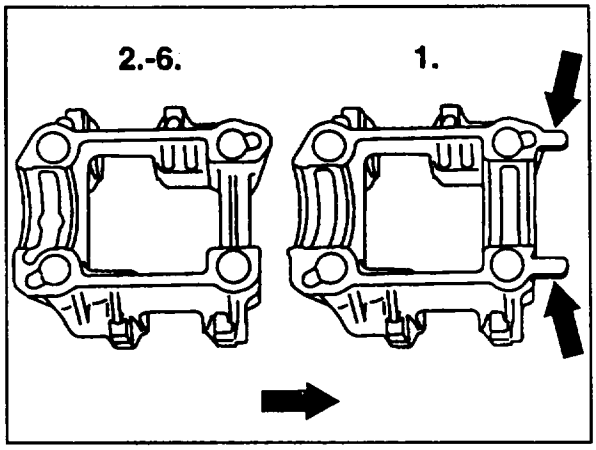

P05-5509-13

The numbered bearing brackets are each centered with 2 dowel sleeves at the cylinder head and bolted with 4 M8 × 70 bolt + washer assys, as of 06/1990 with M8 × 73 10.9 bolt + washer assys.
When performing repairs, always use M8 × 73 10.9 bolt + washer units.
The bearing brackets are machined bolted to the cylinder head.
Camshaft with oversized bearing journals (+ 0.5 mm) are used for camshaft bearings with 0.5 mm oversize (eg. reconditioned engine).

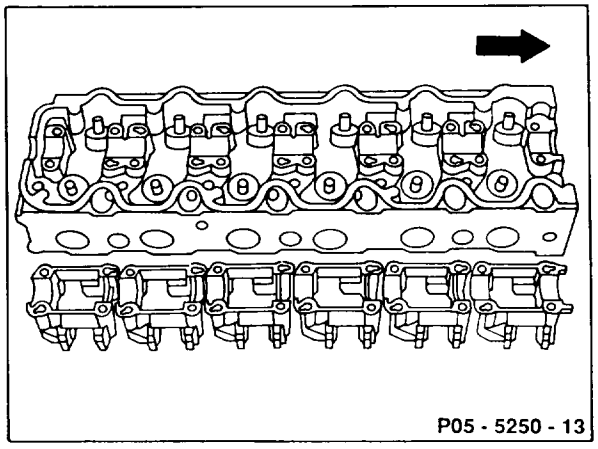

P05 - 5250 - 13

Modification of thread layout on camshaft bearing brackets

The distance between oil pipe and rocker arm has been enlarged as of 10/1985 as a result of the modified thread layout, size (A), at the camshaft bearing brackets.

Size A = 45.5 mm, was 44 mm.

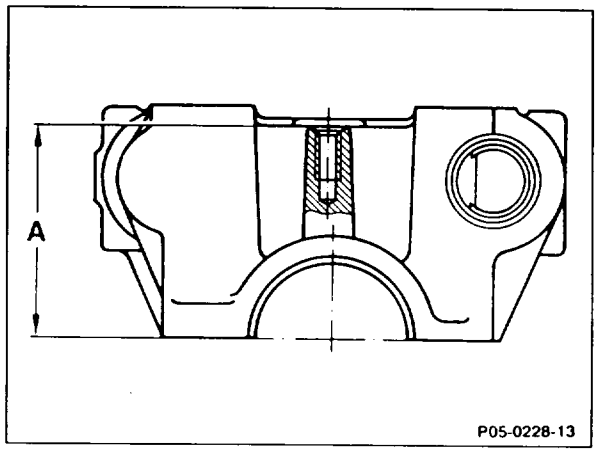

P05-0228-13

Distance between oil pipe and rocker arm, production breakpoint: 10/1985

Model	Engine	Engine end no.		Vehicle ident end no.	
		man. transm.	autom. transm.	A	F
107.041	103.982	000154	000797	039305	*
124.026	103.940	001674	001697	130409	*
124.030 124.090	103.983	001901	010227	*	000652
126.020	103.941	000204	000812	205283	*
126.024 126.025	103.981	000479	003337	*	*

* not recorded

Bolts for camshaft bearing caps at cylinder head

M8 × 73 10.9 (previously M8 × 70)
bolts + washers are used.

This avoids shearing of the securing thread in the cylinder head.

M8 × 73 10. 9 bolt + washer, production breakpoint: 06/1990

Model	Engine	Engine end no.		Vehicle ident end no.	
		man. transm.	autom. transm.	A	F
124.026	103.940	031610	085509	*	*
124.030 124.050 124.090	103.983	037849	216069	*	*
124.226	103.943	000522	001309	*	*
124.230 124.290	103.985	002519	012156	*	*
126.020	103.941	004687	015600	*	*
126.024 126.025	103.981	008251	119980	*	*
129.060	103.984	000311	001317	*	*
201.029	103.942	017516	048668	*	*

* not recorded

05–2200 Removing and installing camshaft

Preceding work:
Air cleaner removed (09–1051).
Cylinder head cover removed (01-0500)
Front cover at top removed (01-2120).
Camshaft oil pipe removed (18-4200)

Operation no. of operation texts and work units or standard texts and flat rates
05–5521, 05–5541, 05–6292 up to 05–7050

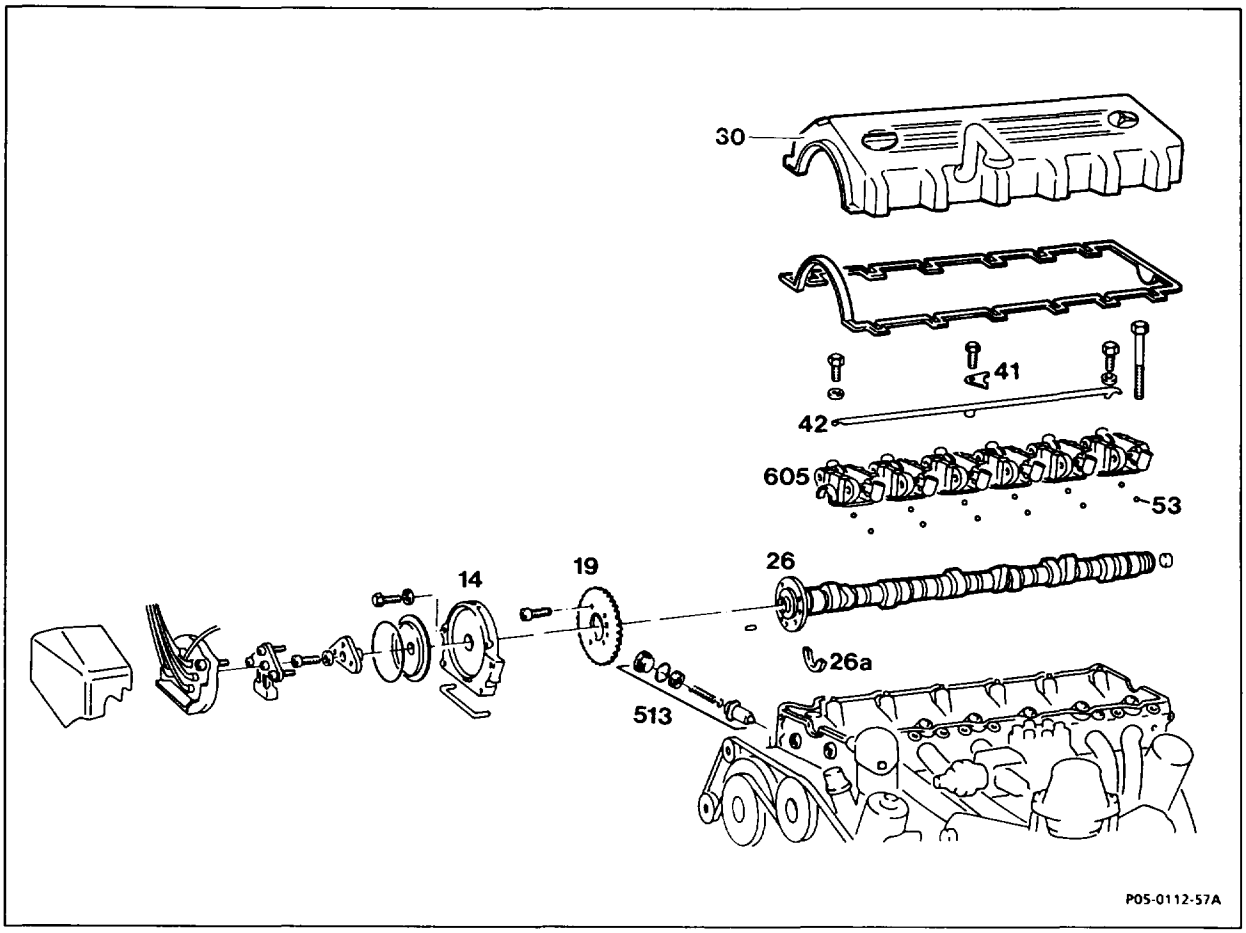

Piston of cylinder 1	set to TDC (step 1)
Camshaft gear (19)	mark relative to camshaft (26) (step 2)
Chain tensioner (513)	remove, install (05-3100)
Camshaft gear (19)	remove, install (step 4, pay attention to note)
All camshaft bearing caps (605) together with rocker arms	remove, install (05-2190)
Camshaft and rocker arm friction surfaces	oil
Camshaft (26)	lift out, insert. Pay attention to thrust washer (26a) (step 6)

Basic position of camshaft (26) . . . . . check (05-2230).
Camshaft lubrication when engine running . . . . . check (step 10).

Notes

Modified camshaft gear
Modified camshaft gears with holes (previously slots) and securing bolts with a higher strength of 10.9 are fitted in order to avoid the securing bolts slackening.

Camshaft gear 2nd version, production breakpoint: 06/1985

Model	Engine	Engine end no.		Vehicle ident end no.	
		man. transm.	autom. transm.	A	F
124.030	103.980	000731	003012	047987	*

* not recorded

Modification to camshaft and camshaft gear
The modified shape of cam permits an engine speed which is 200 rpm higher.

The mounting holes in the camshaft gear have a diameter 7.5 mm (previously 6.4 mm). The camshaft flange is provided with an M7 thread (previously M6) for attaching the camshaft gear. The tightening torque is 16 Nm (previously 10 Nm).

M7 thread in camshaft flange, production breakpoint: 05/1986

Model	Engine	Engine end no.		Vehicle ident end no.	
		man. transm.	autom. transm.	A	F
107.041	103.982	000495	002463	050167	*
124.026	103.940	004621	007048	247878	*
124.030 124.090	103.983	005188	029831	249195	*
126.020	103.941	000951	003725	254136	*
126.024 126.025	103.981	001986	015232	255612	*
201.029	103.942	from start of production		229220	*

* not recorded

The camshaft code number is stamped in the flange (arrow).

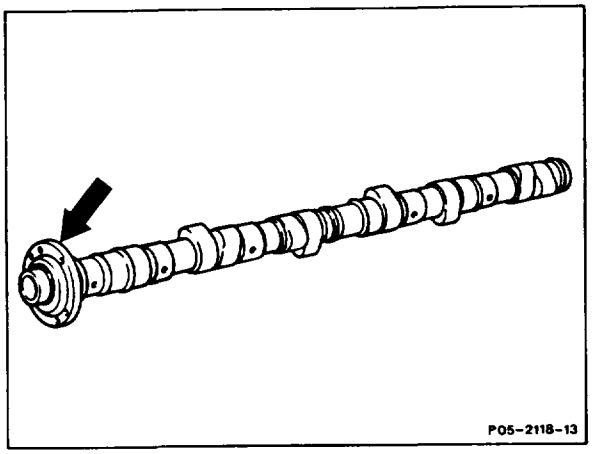

Camshaft with modified timing

Camshafts with modified timing are installed in engines fitted with automatic transmission. The inlet cams are retarded 5° CA (code number 53).

Inlet camshaft +5°, production breakpoint: 05/1989

Model	Engine	Engine end no.		Vehicle ident end no.	
		man. transm.	autom. transm.	A	F
124.026	103.940	*	066138	*	*
124.030 124.050 124.090	103.983	*	168786	*	*
124.230 124.290	103.985	*	007837	*	*
201.029	103.942	*	030695	*	*

* not recorded

Modifications to camshaft, rocker arms and driver

Since 03/1989 chilled cast camshafts and rocker arms with hard metal friction surface have been fitted to all engines. See (05-2320) for production breakpoint.

Provisional identification: "S" (arrow) on contact surface of cylinder head at exhaust end. If chilled cast camshaft is retrofitted, the engine in question should be identified with an "S".

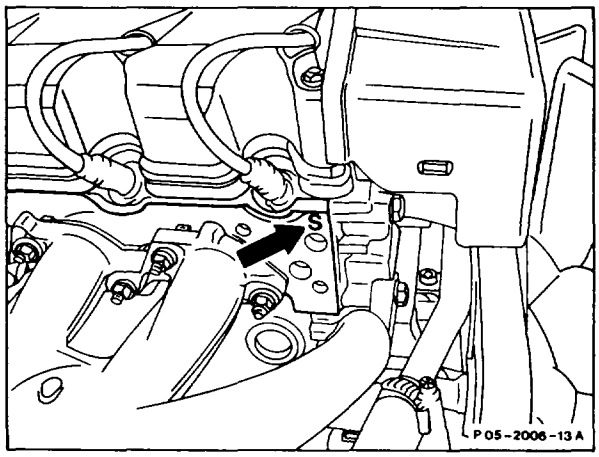

⚠

When performing repairs, only chilled cast camshafts may be installed. The chilled cast camshafts may only be fitted together with rocker arms with hard metal coating (standard as of 03/1989) and the modified driver (see 05-2170) for the distributor rotor.

Inductively hardened camshafts may only be used in combination with hard chrome-plated rocker arms (standard up to 02/1989).

If bearing fretting or severe scoring exists, the camshaft bearings in the cylinder head and in the rocker arm bearing brackets can be widened 0.5 mm by drilling and a camshaft with oversized bearing journals installed.

After damage to a cam (eg. worn cams), all the affected timing parts (hydraulic elements, valves, valve springs, valve heads and valve cotters) should be checked for signs of damage.

If individual rocker arm bearing brackets are renewed, all the bearing brackets must be tightened to specification and the camshaft checked to ensure that it moves freely (rocker arms removed).

If camshaft damage has occurred as a result of an oil deficiency resulting from a loose oil nozzle return lock without stop shoulder, an oil nozzle return lock with stop shoulder must be fitted (standard as of 12/1986) (18-4150).

Removal, installation

1 Position piston of cylinder 1 to TDC (arrow).

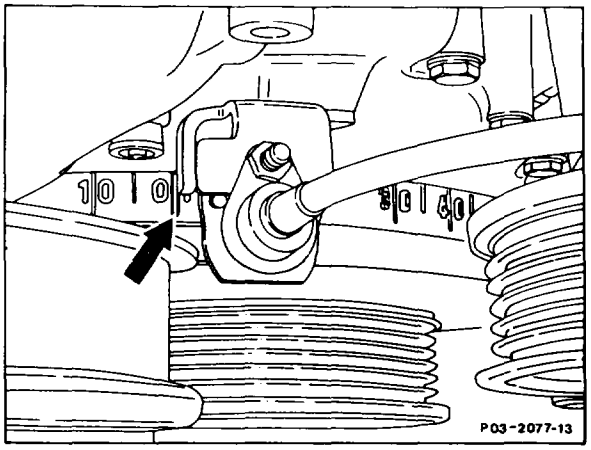

2 Mark position of camshaft gear (19) relative to camshaft (26) and to timing chain (arrows). This is done by applying colored markings next to the locating pin (20) at the camshaft gear (19) and at the timing chain.

Note
If the camshaft gear is replaced, the colored markings must be applied to the same point on the new camshaft gear (19).

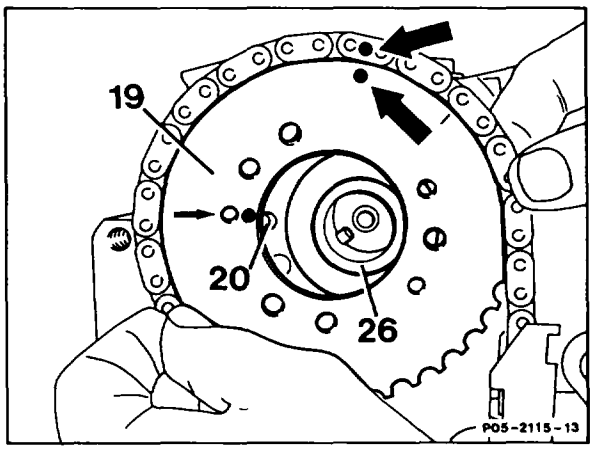

3 Remove chain tensioner (05-3100).

4 Unbolt camshaft gear (19) and pull off by hand.

Tightening torque		
Hexagon socket bolts	M6	11 Nm
Torx bolts	M7	16 Nm

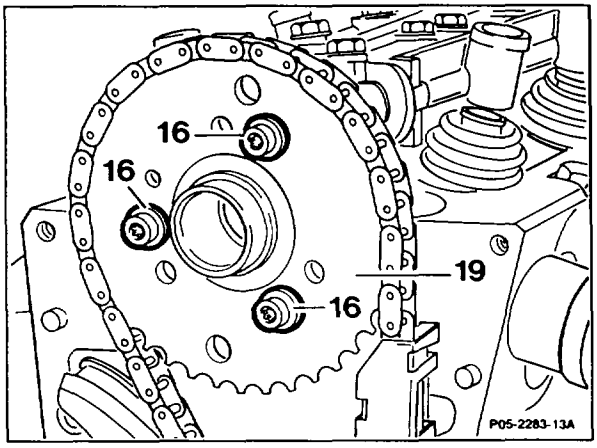

Note
The camshaft gear with 3 slots (A) 1st version should be replaced with the camshaft gear 2nd version (B) with 3 holes each Ø 6 mm when performing repairs.
The camshaft gear 2nd version (B) can be used in place of the camshaft gear 3rd version with 3 holes each Ø 7 mm when performing repairs; in this case, the 3 holes Ø 6 mm should be widened to Ø 7 mm.

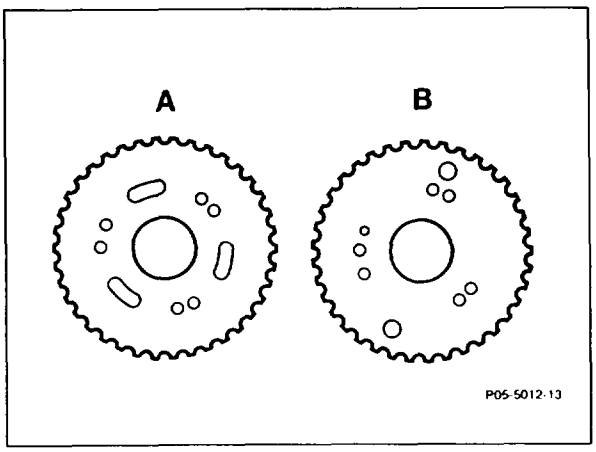

5 Unbolt camshaft bearing caps (605) (05-2190).

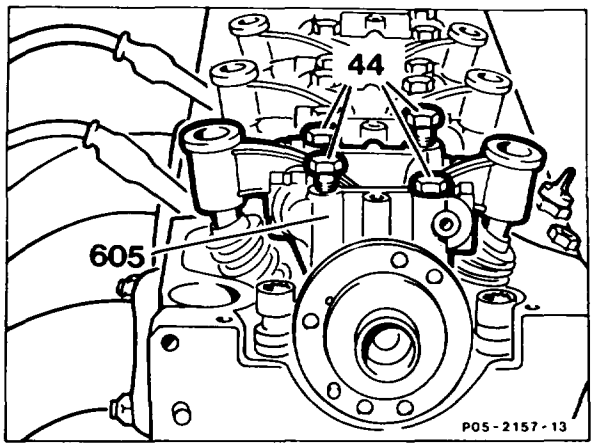

6 Lift out camshaft (26).

Note
Pay attention to the thrust washer at the front (axial mounting) when lifting out camshaft.

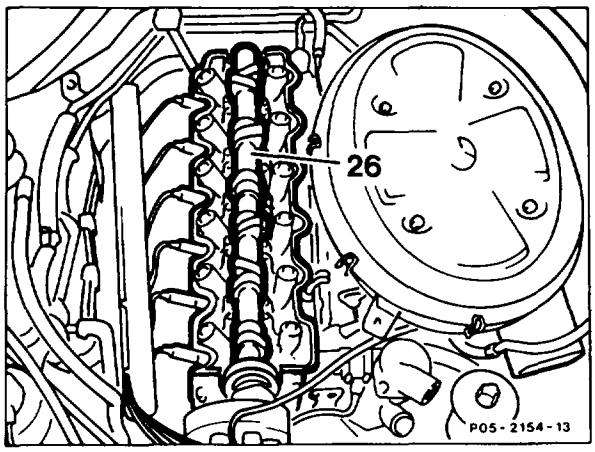

7 Oil camshaft bearing journals.

8 install in the reverse order.

9 Check basic position of camshafts (05-2230).

10 Check oil supply (direction of spray) of camshaft at idle speed.

05–2218 Replacing threaded bush in front of camshaft

Preceding work:
Camshaft removed (05-2200)

Operation no. of operation texts and work units or standard texts and flat rates

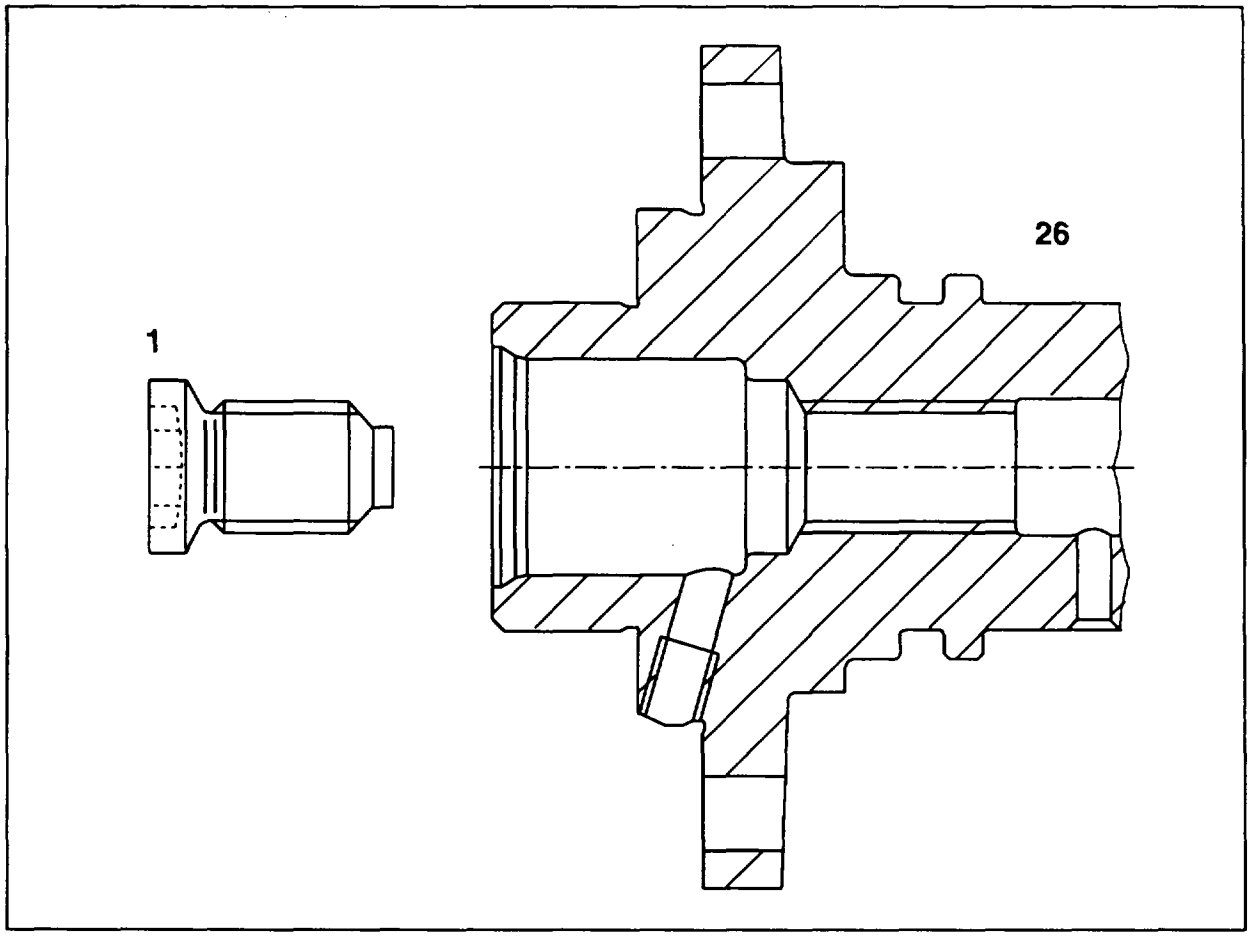

P05-5508-57

Threaded bush (1)	unscrew (torx)
Hollow-drilled camshaft (26)	clean
Thread at front of camshaft (26)	clean, remove grease
Threaded bush (1) (microencapsulated) part no. 103 997 00 15	replace, tighten (45 Nm)

Special tool

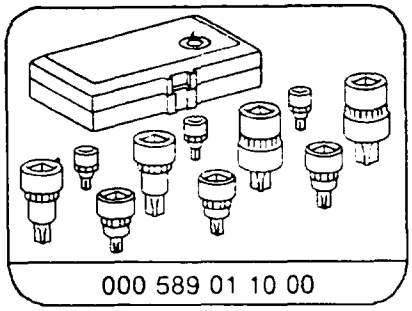

000 589 01 10 00

RA 05.1123-2218/1

05–2220 Replacing end cap in rear of camshaft

Preceding work:
Camshaft removed (05-2200)

Operation no. of operation texts and work units or standard texts and flat rates

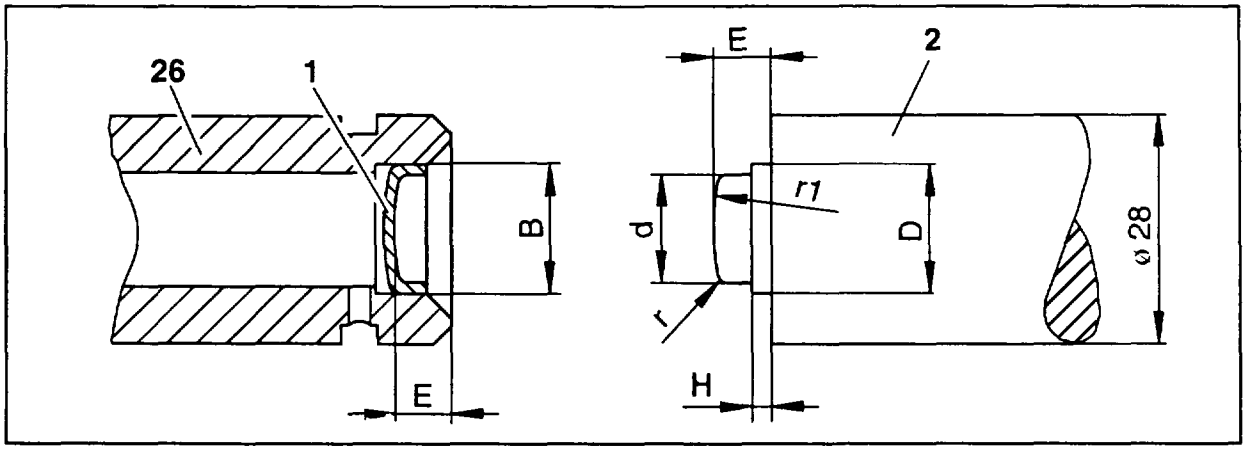

P05-5507-53

Cap (1)	press out with a screwdriver
Hollow-drilled camshaft (26)	clean
Hole (B)	check (see table for sizes)
End cover (1)	knock in with drift (2) (shop-made tool)

⚠

Use new end cover (1). The end cover (1) must not sit at the end of the hole.
It is important to adhere to the insertion depth (size E).

Data in mm

Camshaft (26)		1st version	2nd version
Hole (B)		18.00 – 18.04	14.00 – 14.04
End cover DIN 443 (1)		A18	A14
Insertion depth size (E)		10.0	9.3
Insertion drift (2) (shop-made tool) sizes	d	15.7	11.7
	D	17.7	13.7
	H	5.3	4.3
	r	1	1
	r1	45	35

05–2230 Checking basic position of camshaft

Preceding work:
Cylinder head cover removed (01–0500).

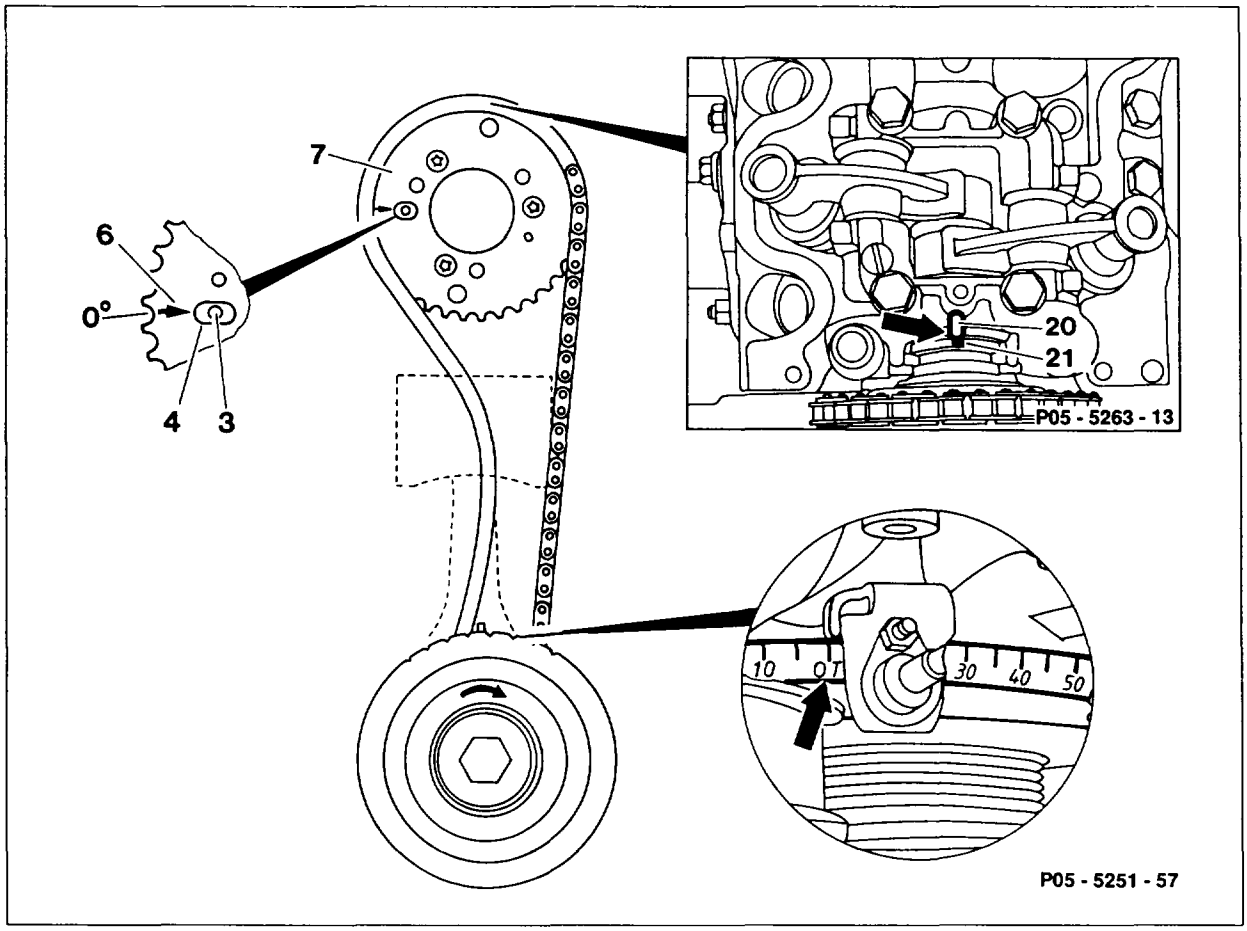

Crankshaft	rotate until TDC marking on vibration damper is aligned with TDC pointer (arrow).
Setting hole (21) or setting pin in camshaft	must be opposite cast marking (20) on first camshaft bearing bracket (arrow).
Hole (4) (oval) with arrow (6)	must be aligned with locating pin (3) in camshaft.

Special tool

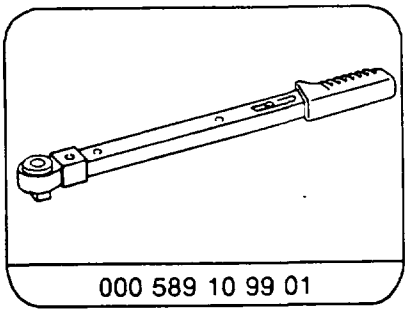

Note

As of 12/1986 a setting hole (21) is provided in the camshaft in place of the pin (22).

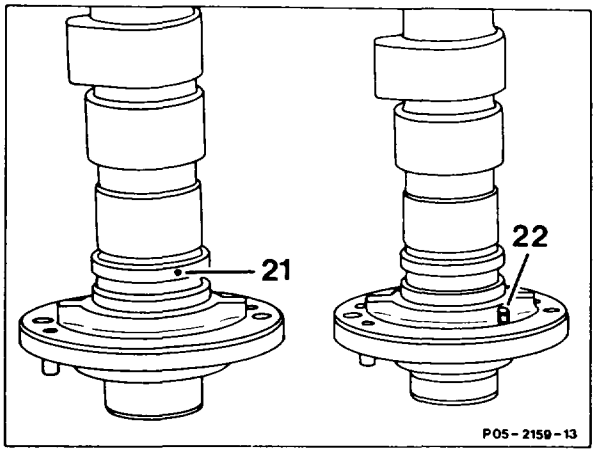

Setting hole in place of setting pin, production breakpoint: 12/1986

Model	Engine	Engine end no.		Vehicle ident end no.	
		man. transm.	autom. transm.	A	F
107.041	103.982	001053	004771	*	*
124.026	103.940	010746	017151	*	*
124.030 124.090	103.983	011713	058123	*	*
126.020	103.941	001999	006594	*	*
126.024	103.981	003433	027422	*	*
201.029	103.942	000282	001635	*	*

* not recorded

05–2240 Adjusting basic position of camshaft

Preceding work:
Front cover removed (01-2120).
Basic position of camshaft checked (05–2230).

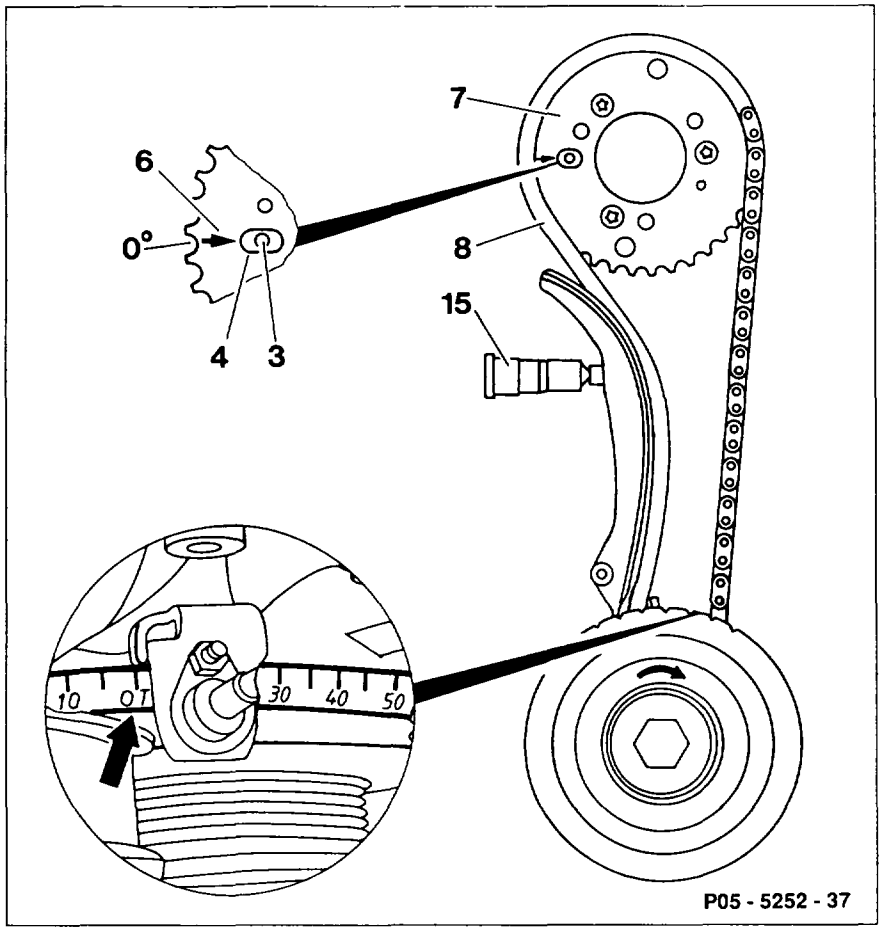

Crankshaft	rotate until TDC marking on vibration damper is aligned with TDC pointer (arrow).
Crankshaft	rotate to TDC of cylinder 1 with hexagon socket size 27 and torque wrench 000 589 10 99 01.
Chain tensioner (15)	remove (05–3100).
Timing chain (8)	lift off camshaft sprocket (7).

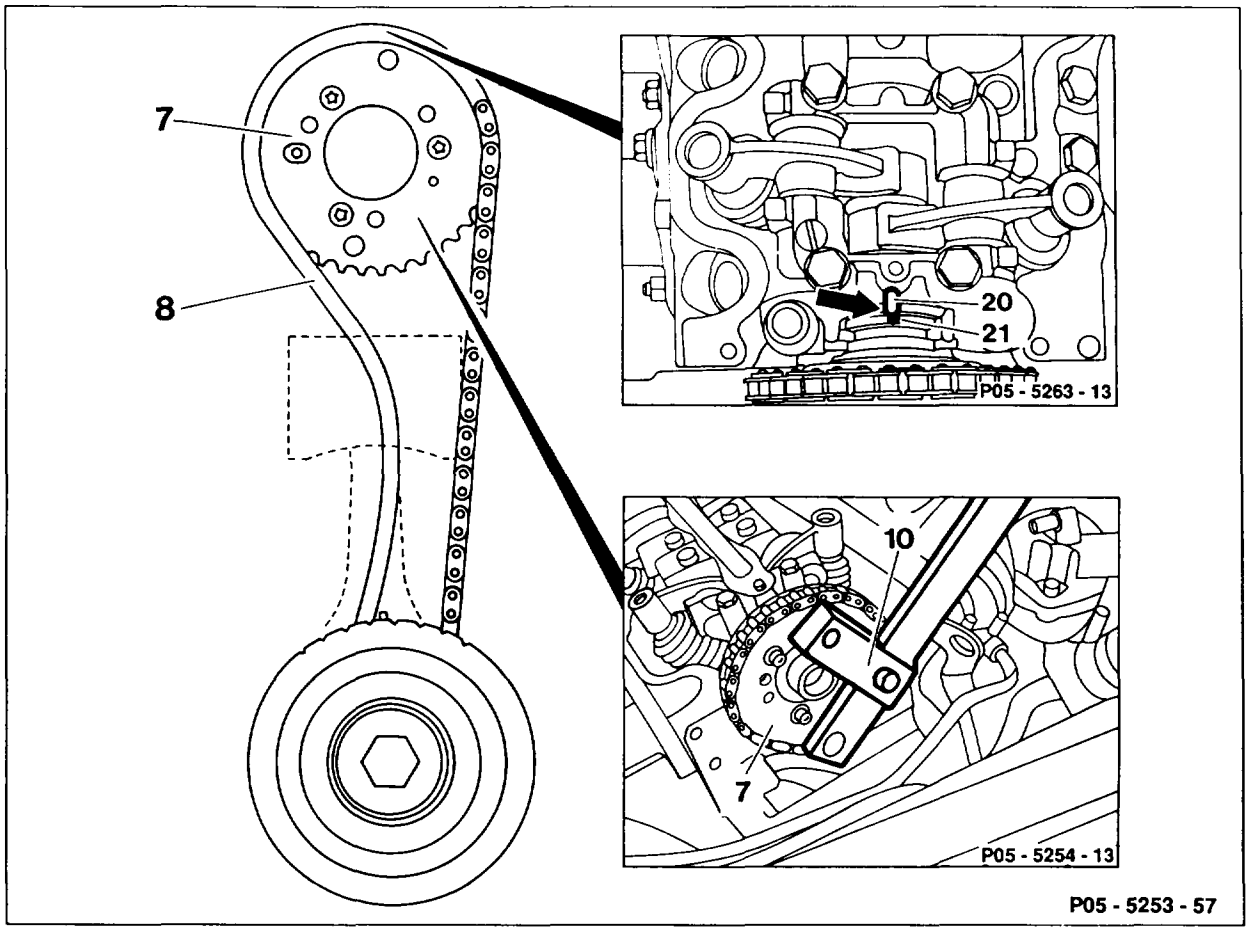

Camshaft sprocket (7)	rotate with wrench (10) 116 589 10 07 00 until setting hole (21) in the camshaft is matched with the cast marking (20) on first camshaft bearing bracket.
	⚠ Ensure that the valves do not strike the piston crown when rotating the camshaft. Pay attention to note.
Chain tensioner	install (05–3100).
Crankshaft	rotate two revolutions in direction of rotation of engine. Check basic position of camshaft (05–2230).

Special tools

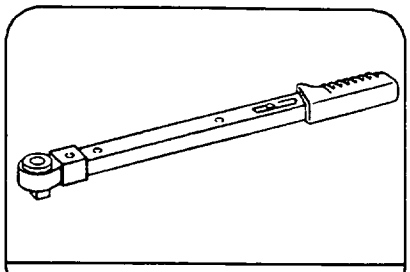

000 589 10 99 01

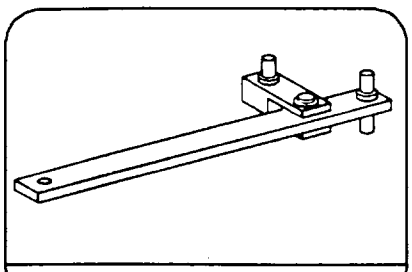

129 589 01 07 00

Note

In crankshaft position 30° before TDC at cylinder 1, the camshaft can be rotated without the valves coming into contact with the piston.

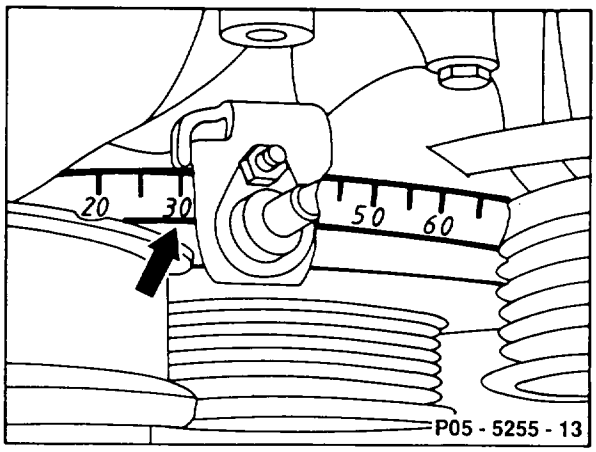

05–2320 Removing and installing rocker arms

Preceding work:
Camshaft bearing caps removed (05–2190).

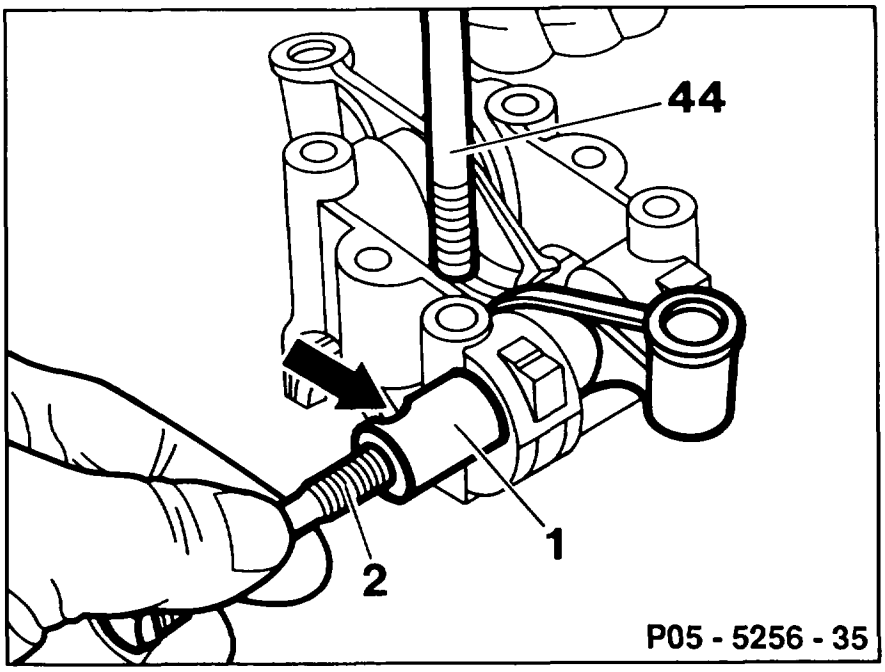

Rocker arm shaft (1)	pull out by hand with M8 bolt (2).
Rocker arm shaft (1)	install so that the half-hole (arrow) is aligned with the screw (44).
Rocker arms must be installed again	at the same point.

Data in mm

Hole in rocker arm		16.016 – 16.027
Diameter of rocker arm shaft		15.995 – 16.006
Radial play of rocker arm on rocker arm shaft		0.010 – 0.032
Hole in camshaft bearing cap		16.000 – 16.018
Rocker arm shaft	Hardening depth	0.3 – 0.5
	Scleroscopic hardness	78 – 82

Note

Since March 1989 rocker arms with soldered hard metal plates are installed (arrow).
These rocker arms must be installed together with the chilled cast iron camshaft, see removing and installing camshaft. See tables for production breakpoint of rocker arms and camshafts.

Oil supply of rocker arm bearings and hydraulic valve clearance compensating elements, see function of oil circuit (18–0050).

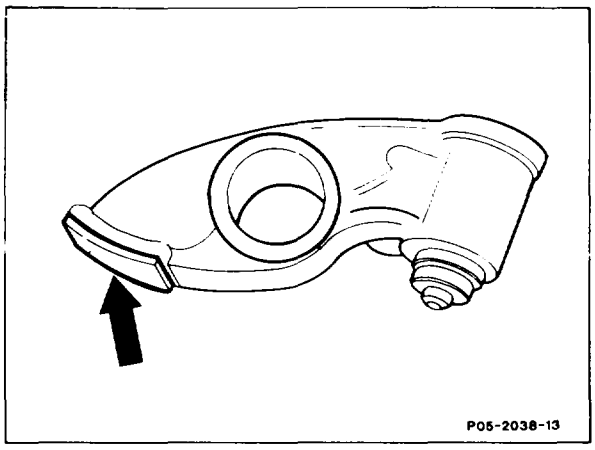

Hard metal friction surface, production breakpoint: 02/89 (Belgium only, camshaft code 56)

Model	Engine	Engine end no.		Vehicle ident end no.	
		man. transm.	autom. transm.	A	F
124.026	103.940	025248	059428	956150	105650
124.226	103.943	000405	000965	968968	*
126.020	103.941	003792	012871	465578	*
126.024 126.025	103.981	006535	076196	465698	*
201.029	103.942	012727	022389	488735	604004

* not recorded

Hard metal friction surface, production breakpoint: 03/1989 (stand. version, camshaft code 49)

Model	Engine	Engine end no.		Vehicle ident end no.	
		man. transm.	autom. transm.	A	F
107.041	103.982	002246	010089	099861	*
124.026	103.940	025989	062585	968961	108199
124.030 124.050 124.090	103.983	029912	159957	968722	106913
124.226	103.943	000414	000990	973204	*
124.230 124.290	103.985	001941	007322	974532	108634
126.020	103.941	003932	013218	470435	*
126.024 126.025	103.981	006671	079773	465698	*
201.029	103.942	013378	025679	492162	609832

* not recorded

Special tool

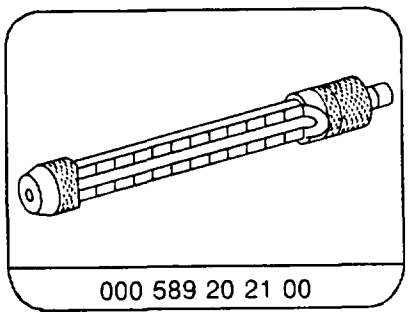

000 589 20 21 00

05–2500 Removing and installing valve springs

Preceding work:
Air cleaner removed (09–1051).
Camshaft oil pipe removed (18-4200).
Spark plugs removed (15-1031)

Operation no. of operation texts and work units or standard texts and flat rates
05–3510

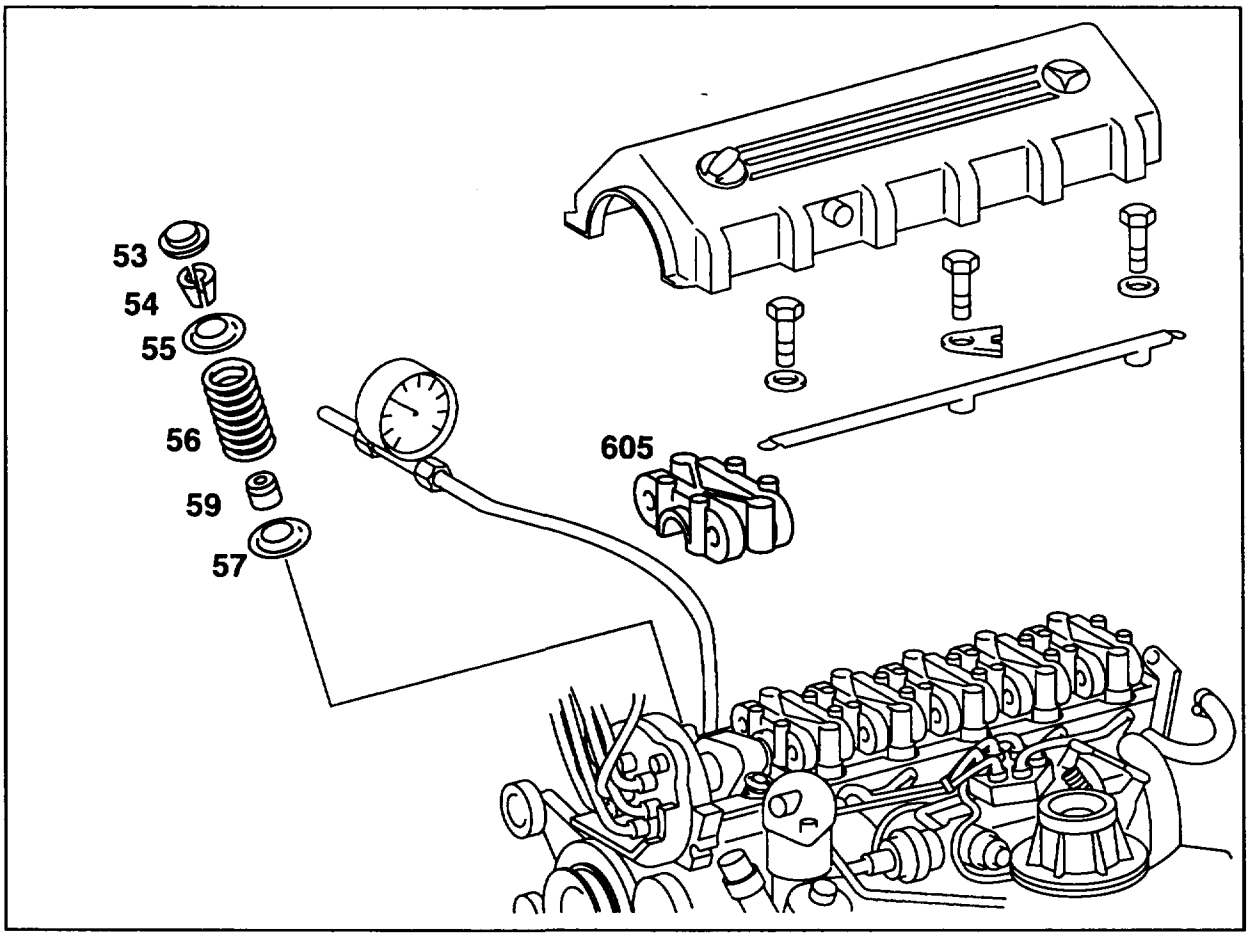

P05-5513-57

Camshaft bearing cap (605) of the relevant cylinder	remove, install (05-2190)
Ball sockets (53)	take off, insert. Use magnetic finger 116 589 06 63 00 (step 2)
Piston of relevant cylinder	position to TDC (step 3)
Supporting bracket 103 589 00 61 00	install (step 4)
Relevant cylinder	pressurize (step 5)
Valve collets (54), valve spring retainer (55) and valve springs (56)	remove, install. Use lever presser 111 589 18 61 00 and thrust piece 601 589 16 63 00 (steps 6 to 9)

Upper and lower valve spring retainers (55 and 57)	check for signs of scores (visual inspection) (step 12); remove valve stem seals if necessary (05-2700) and replace lower valve spring retainer (57).
Valve keyway	check
Valve springs (56)	check (05-2600)
Valve length	check; remove valve stem seal (59) and lower valve spring retainer (57) (05-2700) for this step and check size from valve stem end to contact surface on cylinder head, see (05-2910)

Special tools

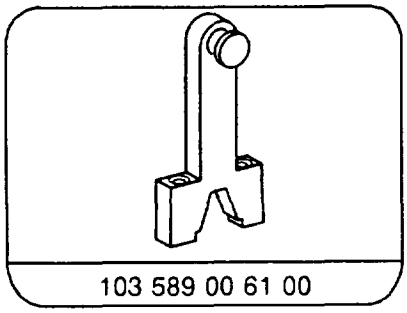
103 589 00 61 00

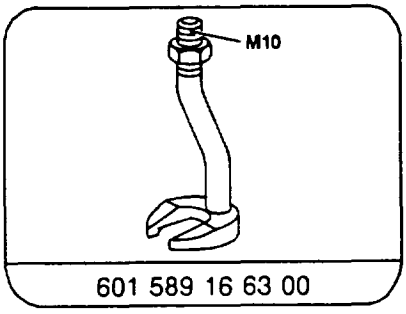

601 589 16 63 00

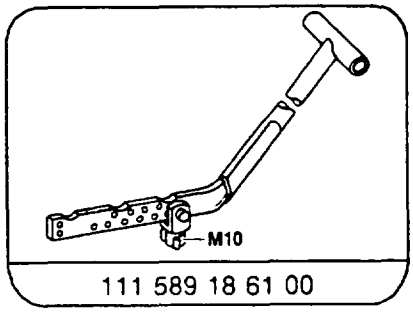

111 589 18 61 00

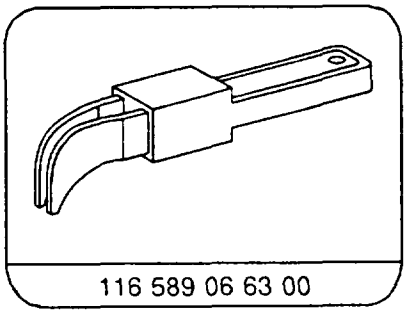
116 589 06 63 00

Commercially available tools

Cylinder leak tester	eg.	Bosch, EFAW 210 A Sun, CLT 228
Tweezers, straight 160 mm with rounded tips	eg.	Stahlwille D–42349 Wuppertal

Note

On engine 103.983 AMG the valve spring disk contact surfaces on the cylinder head are lower by 0.5 mm on the inlet and exhaust valves.

Removal, installation

1 Remove camshaft bearing cap of the relevant cylinder (05-2190)

2 Use magnetic finger 116 589 06 63 00 to lift out ball sockets (53)

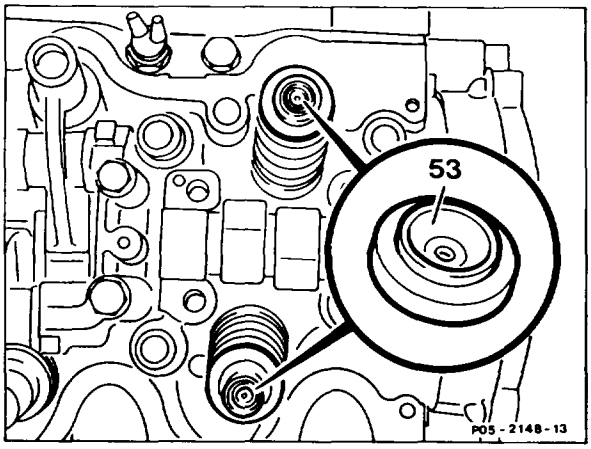

Installation note
Ball sockets must be re-installed at the same point.

3 Position piston of the relevant cylinder to TDC.

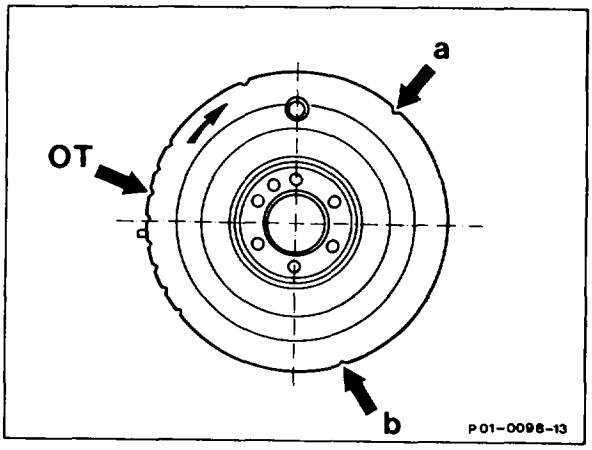

Note
The relevant pistons are in the TDC position if the markings shown in the drawing opposite (arrows) on the vibration damper are alined with the TDC pointer and the cams of the relevant cylinder are positioned at base circle.

Marking	TDC	b = 120	a = 240
Pistons of cylinders at TDC	1 and 6	2 and 5	3 and 4

4 Bolt supporting bracket (arrow) 103 589 00 61 00 to the cylinder head.

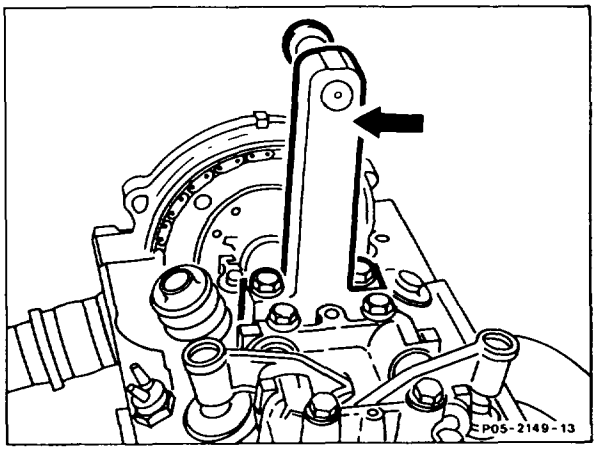

5 Screw connection hose of cylinder leak tester into the spark plug hole and pressurize compression chamber (about 5 bar)

Note
If the crankshaft rotates, install retaining lock for crankshaft/ring gear (03-5000).

6 Attach lever depresser (1) 111 589 18 61 00 with thrust piece (2) 601 589 16 63 00 to the supporting bracket (3) and position against the valve spring retainer (55).

7 Apply slight pressure to valve spring retainer (55). Detach valve collets (54).

8 Compress valve spring, use magnetic finger (4) 116 589 06 63 00 or tweezers (commercially available tool) to remove valve collets (54).

9 Remove valve spring retainer (55) and valve spring (56).

Note
The valve spring retainers and valve springs of the exhaust and inlet valves are identical.

10 Examine upper and lower valve spring retainers for signs of scoring (visual inspection). If scores exist on the contact surfaces, replace valve spring retainers; remove valve stem seals for this step (05-2700).

11 Check valve keyway.

12 Check valve springs (05-2600).

13 Check valve length, see (05-2910).

14 Install in the reverse order.

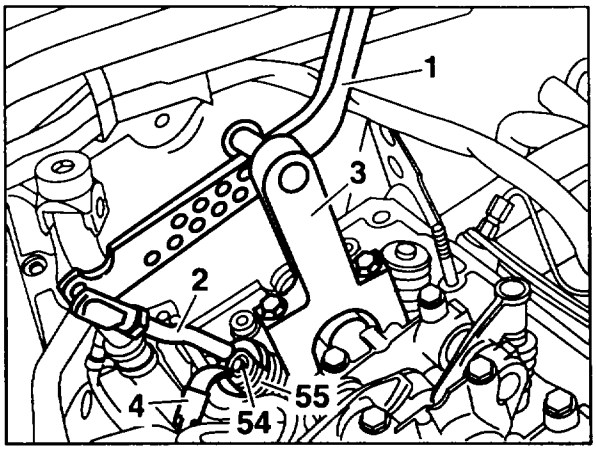

P05-5514-13

05–2600 Checking valve springs

Preceding work:
Valve springs removed (05-2500)

Operation no. of operation texts and work units or standard texts and flat rates

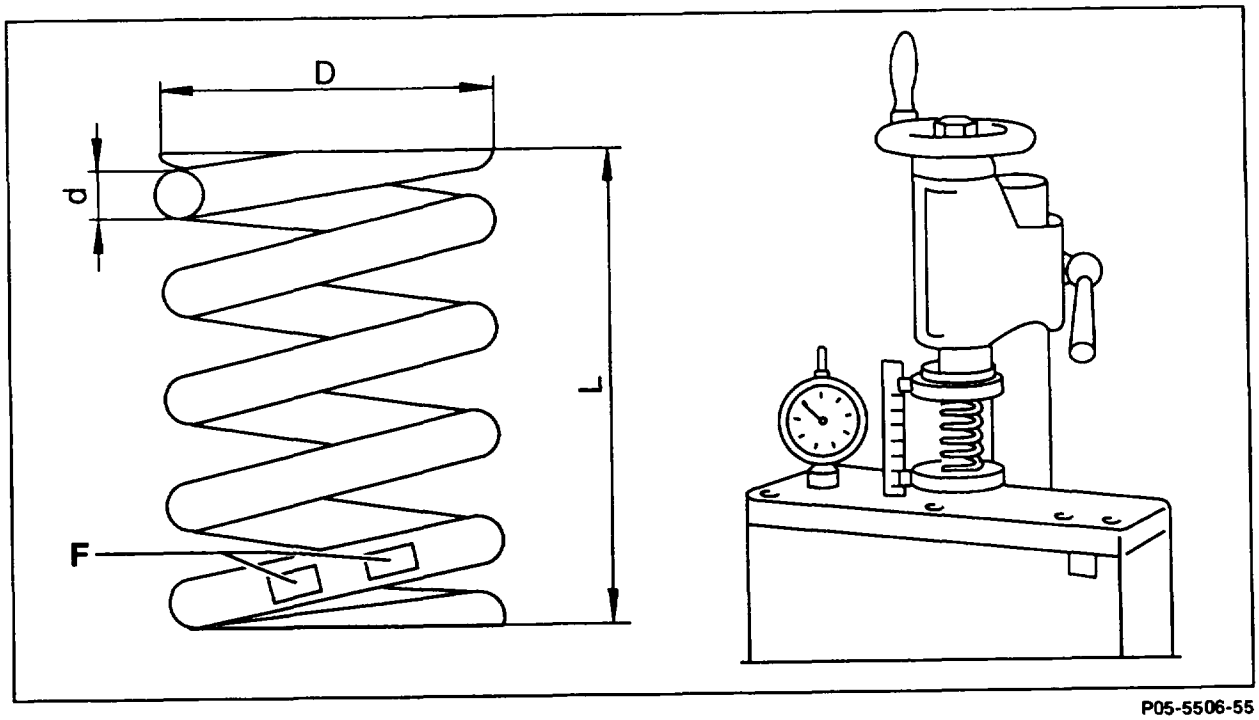

P05-5506-55

Valve springs . . . . . clean.

⚠

Valve springs which are not within the dimensional tolerance, are corroded, have surface rust or mechanical damage at the ends, should be replaced.

Colored identification on valve springs . . . . . check, match; see table.

Note

Valve springs 1st version (up to 05/1988) and 2nd version should be replaced by valve springs of the 3rd version (as of 05/1991) when performing repairs.

Spring force at pretensioned length . . . . . measure.

If the valve springs do not reach the specified spring force, they cause frictional connection losses at high engine speeds and must be replaced.

Data

	Valve spring part no. [1]	Color coding (F)	Outer Ø (D) mm	Wire Ø (d) mm	Length untensioned (L) mm	Length L1 and L2 pretensioned spring force in N			
						L1	N	L2	N
1st version	102 053 02 20	yellow–red or violet–red	34.7	5.0	49	41	425 ±26	30.4	1084 +30 –50
2nd version	102 053 11 20	violet–yelloworange or yellow–yelloworange							
3rd version	103 053 00 20	violet–red–yellow							

[1] Except engine 103.983 AMG.

Valve spring material modified (3rd version), production breakpoint: 05/1991

Model	Engine	Engine end no. man. transm.	Engine end no. autom. transm.
124.007/026/027	103.940	035 501	101 174
201.029	103.942	019 532	061 285
124.226	103.943	–	001 511
126.024/025	103.981	008 807	138 351
124.030	103.983	043 309	251 326
129.060	103.984	000 672	003 127
124.050/090/230/290	103.985	–	016 762
463.2	103.987	000 788	001 720

05–2700 Replacing valve stem seals

Preceding work:
Valve spring removed (05–2500).

Operation no. of operation texts and work units or standard texts and flat rates
05–3510

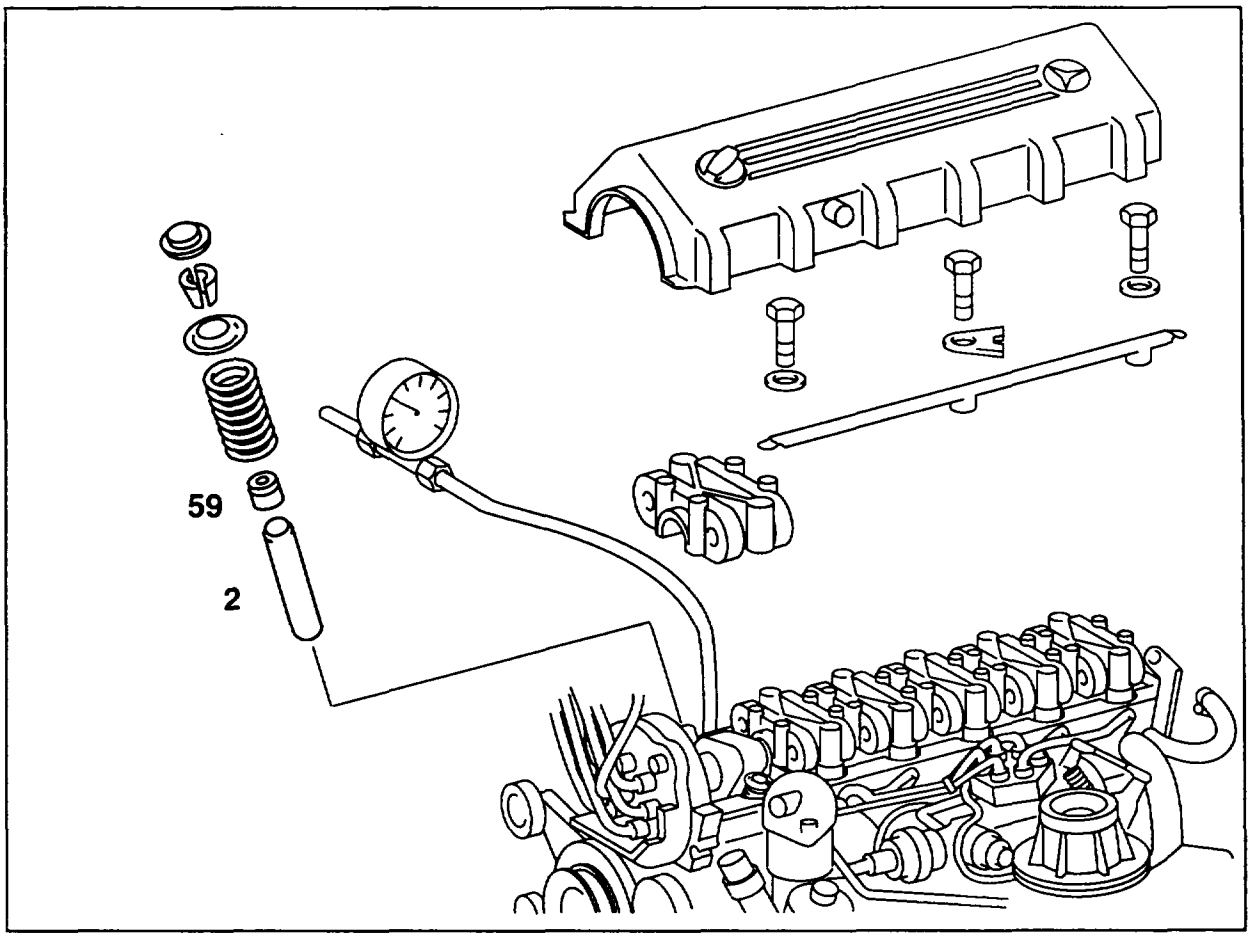

P05-5511-57

Valve stem seals (59)	pull off with pliers, special tool 606 589 00 37 00
Surface of valve stems	check (visual or finger check). Replace valves with rough stem surface or burrs.
Protective sleeve (2)	fit onto valve stem, remove
Valve stem seals (59)	oil
Valve stem seals (59)	press on by hand

⚠

Pay attention to different valve stem seals for the inlet and exhaust valves; see "Valve stem seal versions"

Special tool

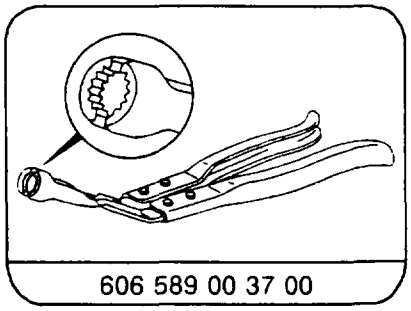

Notes

Exhaust and inlet valve stem seals and assembly sleeves are supplied as a repair kit.
The assembly sleeves must be used in order to avoid damage to the valve stem seals.

Valve stem seal versions

Distinguishing features:

⚠

As the sets of seals contain valve stem seals for the inlet and exhaust valves, pay attention to the distinguishing features (see ill.).

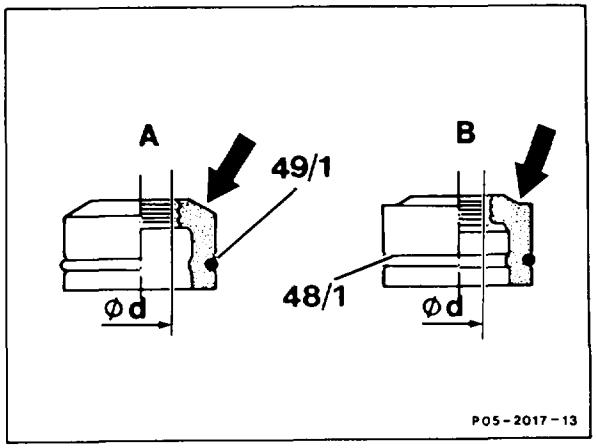

A Exhaust valve stem seal
d = 8.2 mm
Arrow = straight chamfer
49/1 = bright galvanized wire ring (yellow)

B Inlet valve stem seal
d = 7.3 mm
Arrow = chamfer with shoulder
48/1 = phosphatized wire ring (black)

Modification to material of inlet valve stem seal

Valve stem seals manufactured from Viton as of 09/1989 in order to reduce oil consumption.
Identification: brown colored material.

⚠

If increased oil consumption exists, install only valve stem seals made of Viton. The valve stem seals made of Viton can also be fitted to engines manufactured prior to this date.

Inlet valve stem seals made of Viton, production breakpoint: 09/1988

Model	Engine [1]	Engine end no.		Vehicle ident end no.	
		manual transmission	automatic transmission	A	F
107.041	103.982	002077	009047	093576	*
124.026	103.940	023610	053472	850581	090604
124.030 124.050 124.090	103.983	026036	134666	848855	088802
124.226	103.943	000313	000720	852771	*
124.230 124.290	103.985	001503	005305	853827	089264
126.020	103.941	003626	012264	436275	*
126.024 126.025	103.981	006129	067114	436792	*
201.029	103.942	011239	015479	456546	461032

* not recorded

[1] Reconditioned engines as of November 1988, as of engine no. 830 569

05–2845 Checking valve guides

Preceding work:
Cylinder head removed (01-4150).
Valves removed (05-2500).

Operation no. of operation texts and work units or standard texts and flat rates

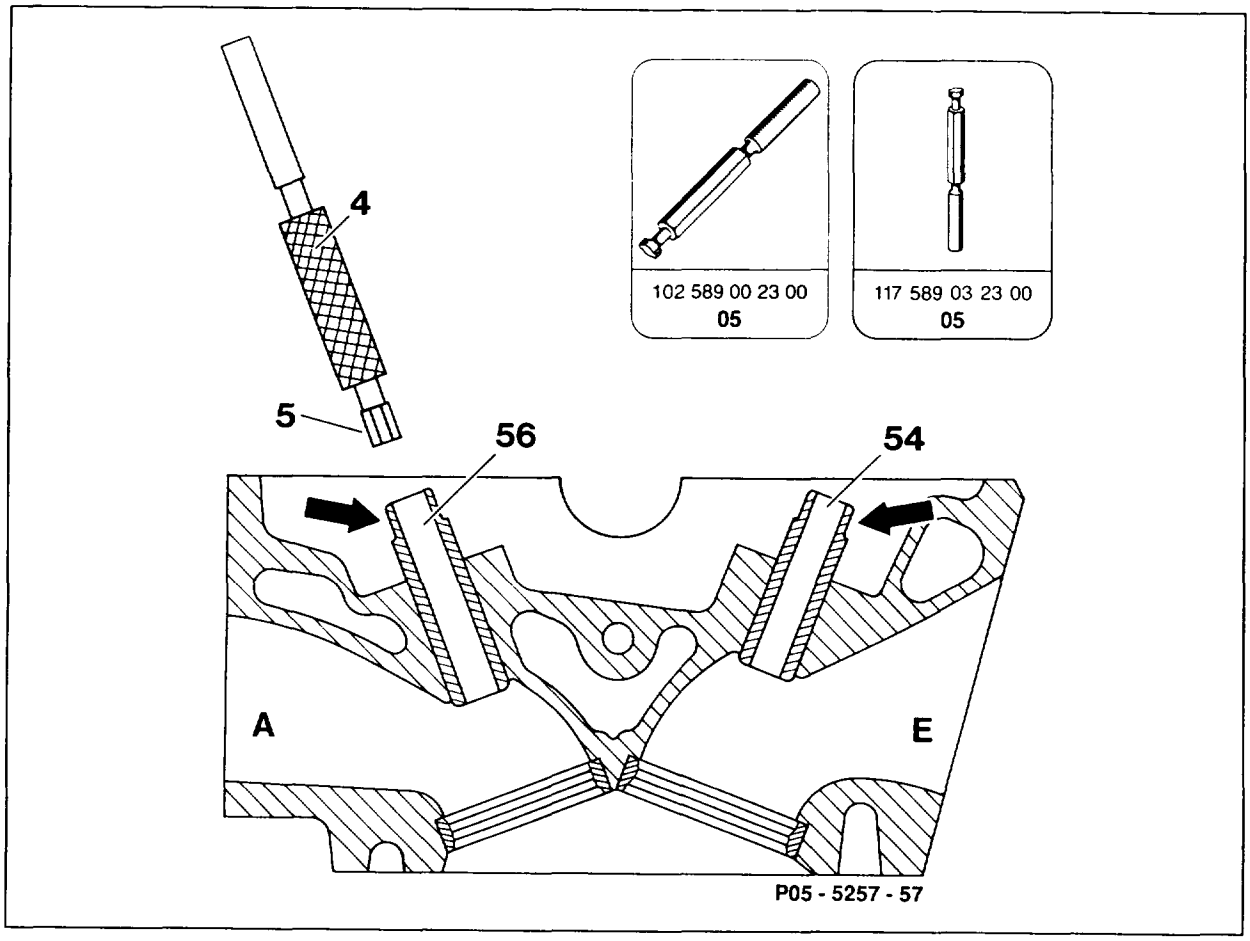

Inlet and exhaust valve guides (54) and (56)	check in longitudinal and transverse direction with go/no go drift (4). Check whether no go end (5) can be inserted over its entire height (5 mm). Go/No go drift Ø 8 mm 102 589 00 23 00 for inlet valve guide Go/No go drift Ø 9 mm 117 589 03 23 00 for exhaust valve guide
Valve guide	replace (05-2850) if go/no go drift (5) can be inserted over its entire height
Seat (arrows) of valve stem seal at valve guides .	check
Valve guide	replace (05-2850) if seat worn (arrows)

05–2850 Replacing valve guides

Preceding work:
Valve guides checked (05–2845).

Basic bore and valve guide in cylinder head

	Standard size	Standard size I	Repair size I	Repair size II
Basic bore Ø in cylinder head	14.000 – 14.011	14.035	14.210	14.410
Outer Ø and color coding of valve guide	14.023 – 14.031	14.023 – 14.030 grey – green 14.044 – 14.051 grey – brown	14.214 – 14.222 red	14.414 – 14.422 white
Inlet part no.	–	103 050 22 24	103 050 23 24	103 050 24 24
Exhaust part no.	–	103 050 27 24	103 050 28 24	103 050 29 24
Overlap	0.012 – 0.031			

Valve guide		Inlet	Exhaust
Valve guide ID		8.000 – 8.015	9.000 – 9.015
Length		42	48
Size	a	3.3	3.3
	b	6.3 – 6.6	6.3 – 6.6
	c	16.7 – 16.9	15.9 – 16.1

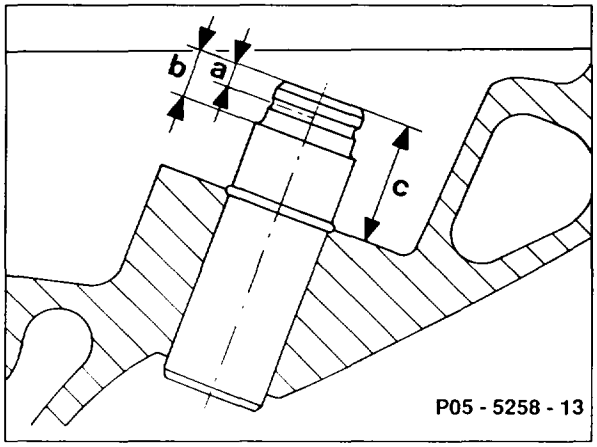

Knocking out valve guide

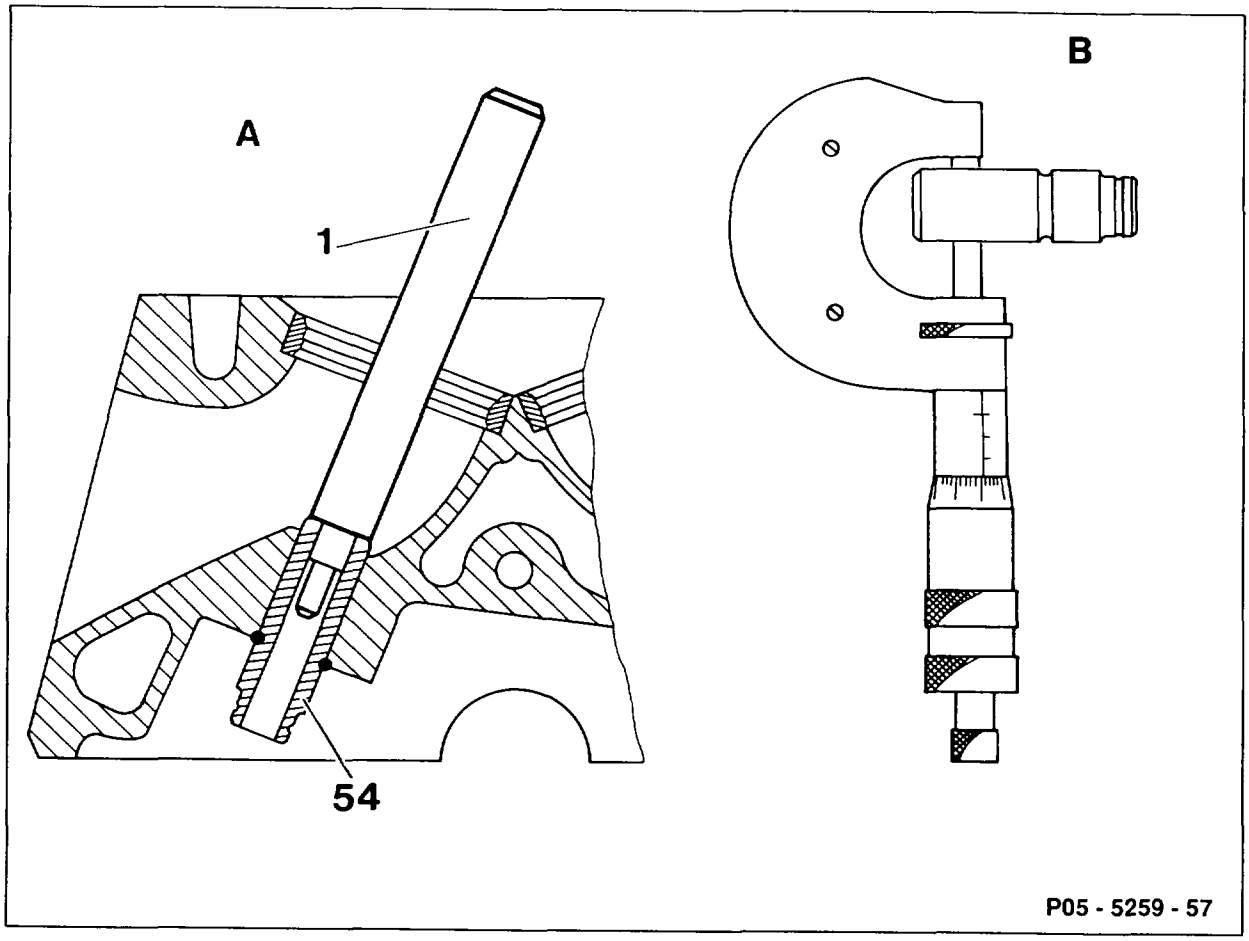

A Valve guide knocked out
B Measuring valve guide OD

Valve guide (54)	knock out from combustion chamber side with drift (1).

Inlet drift 8 mm dia. 103 589 03 15
Exhaust drift 9 mm dia. 103 589 02 15

Checking basic bore, matching valve guide

OD	measure with a micrometer.
Determine which valve guide	is installed, see table.
Next larger valve guide	match.
Basic bore in cylinder head according to matched valve guide	file standard size I or broach repair size I.

Standard size I

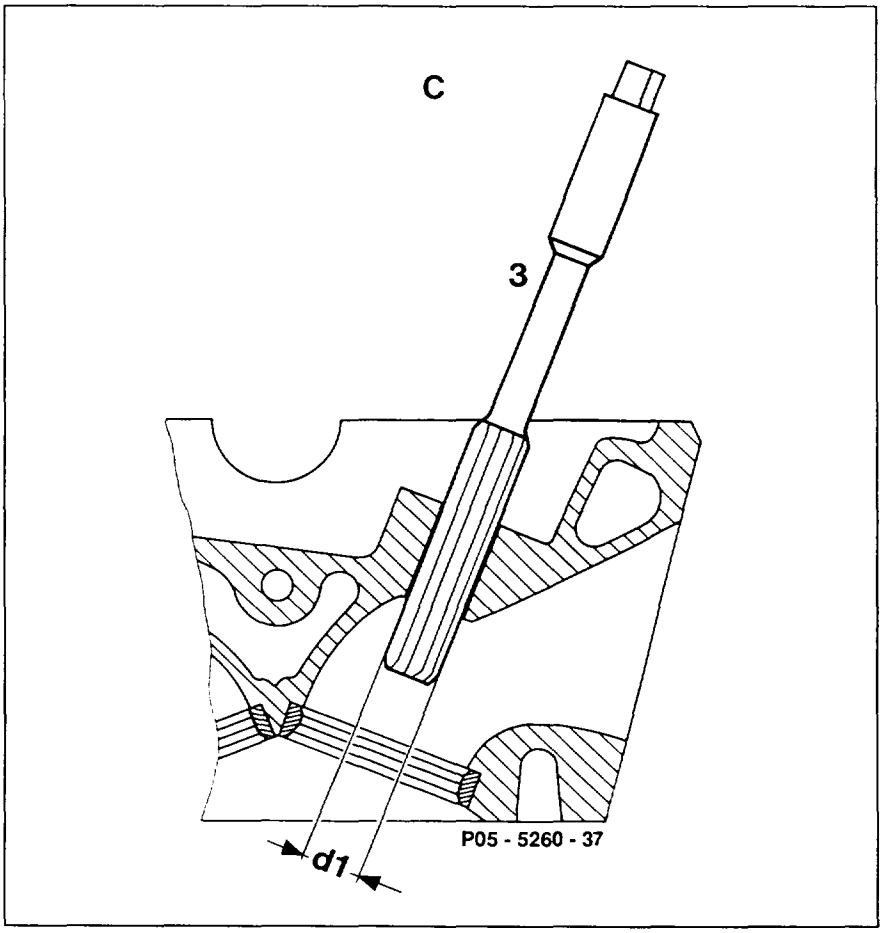

Basic bore	ream with reamer.
Basic bore	ream through with reamer (3) 110 589 03 53 00 dia. 14.035 mm.
Lubricate with petroleum	when reaming.
Apply only slight pressure when reaming and . . .	do not tilt reamer (3).
Clean blades of reamer	before each reaming operation.

Repair size I (broaching basic bore with broaching needle dia. 14.21)

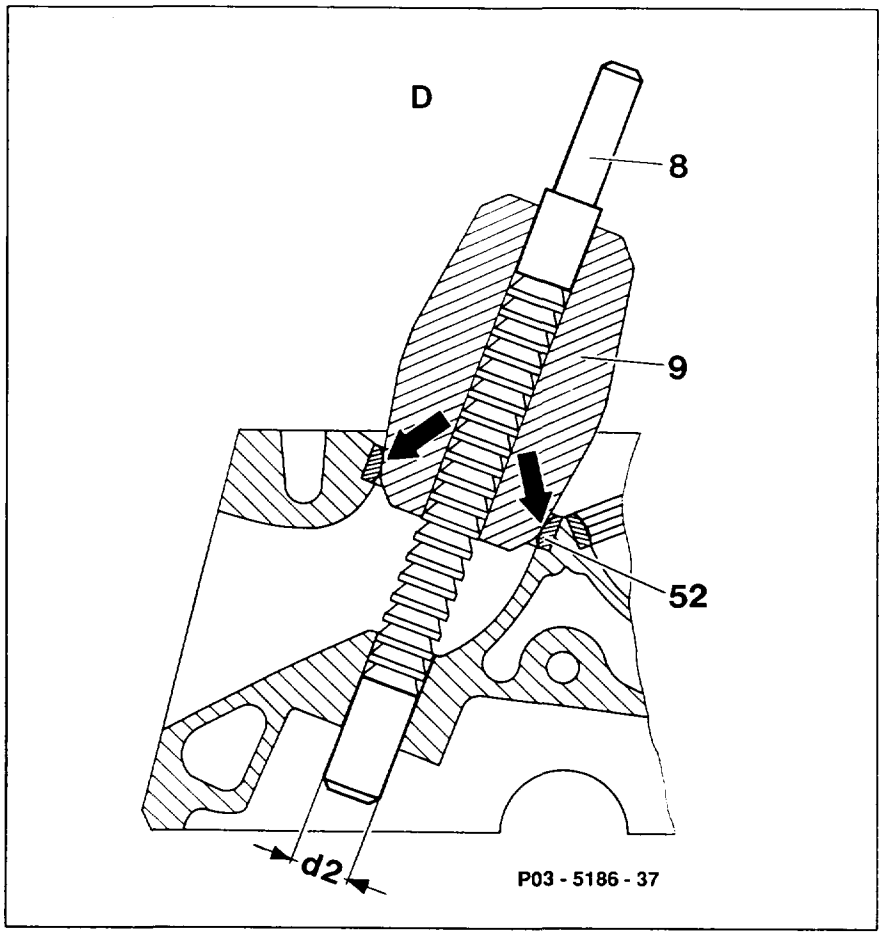

Matching engines – guide sleeves – broaching needles

Engine	Valve	Valve guide basic bore	Guide sleeve part no.	Page	Broaching needle part no.
103.94 103.98	Inlet	14.21 mm	102 589 08 63 00 102 589 01 63 00	A A	115 589 00 53 00
103.94 103.98	Exhaust	14.21 mm	102 589 08 63 00 102 589 00 63 00	B A	115 589 00 53 00

Inside of valve seat rings	remove all carbon deposits.
Blades of broaching needle (8)	clean with plastic brush before each broaching operation.
Appropriate guide sleeve (9)	select, see table.
Guide sleeve (9), basic bore and broaching needle (8)	moisten with engine oil.
Guide sleeve (9) together with broaching needle (8)	introduce into cylinder head.

Broaching needle (8)	insert into basic bore in broaching direction up to first blade.
Fit guide sleeve (9) onto valve seat ring (52) (arrows) and by turning center guide sleeve (9) on valve seat ring (arrows) and broaching needle (8)	in basic bore.
	⚠ Centering must not take place on carbon residues, casting projections, inlet and exhaust passage walls.
Broaching needle (8)	press through.

Inserting valve guide, checking ID

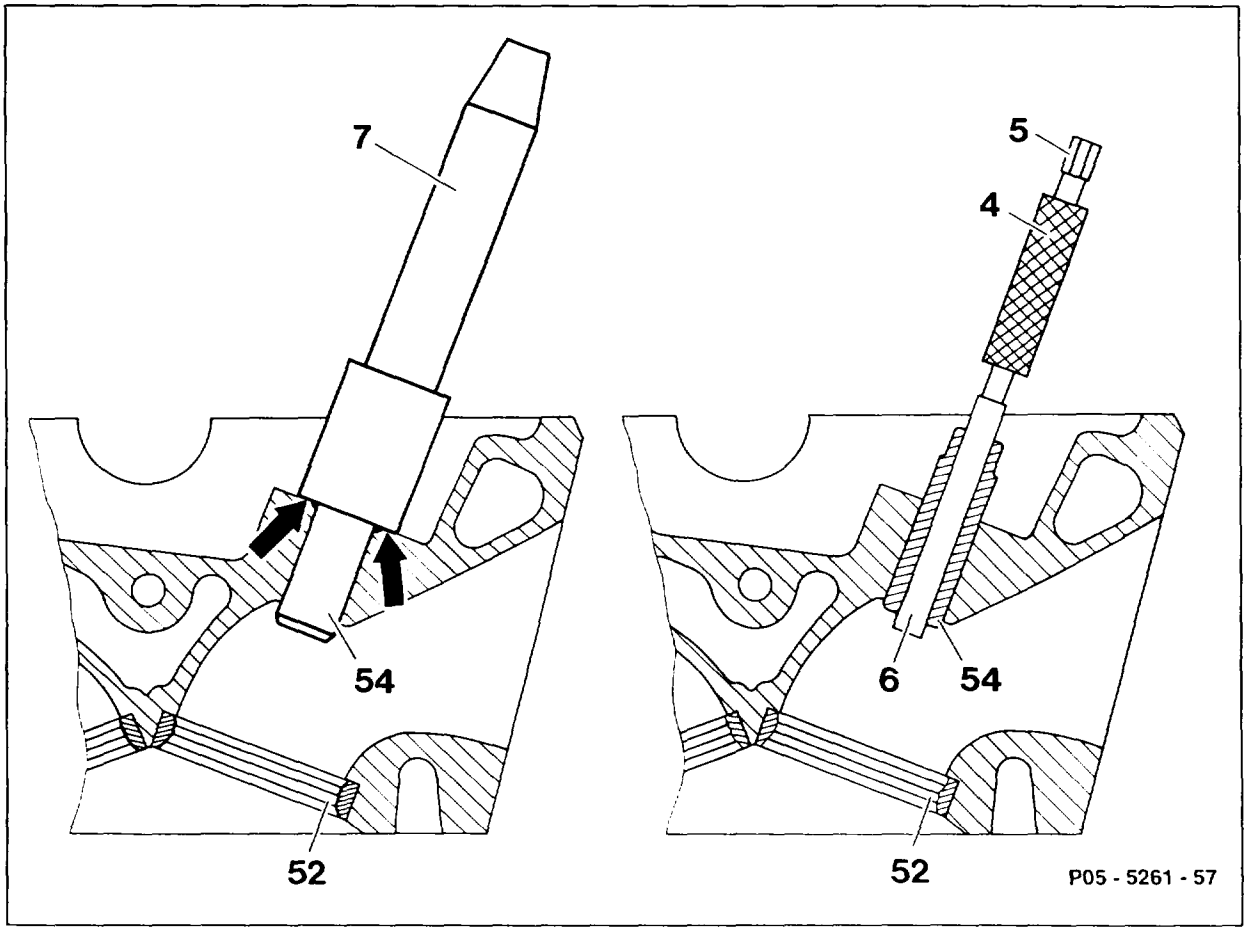

Valve guide (54)	supercool, in liquid nitrogen (approx. 3 minutes).
If no liquid nitrogen available,	heat cylinder head in water bath to approx. 80 °C.
Valve guide (54)	knock in with drift (7) as far as stop (arrows).
Inlet drift 103 589 00 15 00. Exhaust drift 103 589 01 15 00.	
Valve guide (54) when cylinder head cooled	check if tightly seated.
ID of valve guide (54)	check with gauging drift (4).
Inlet gauging drift 102 589 00 23 00 Exhaust gauging drift 117 589 03 23 00 It must be possible to insert the go side (6) of the gauging drift (4)	fully.
If necessary, ream ID	with reamer.
Inlet reamer 000 589 21 53 00 Exhaust reamer 000 589 10 53 00	
Valve seat (52)	check concentricity, re-work if necessary (05–2910).

Special tools

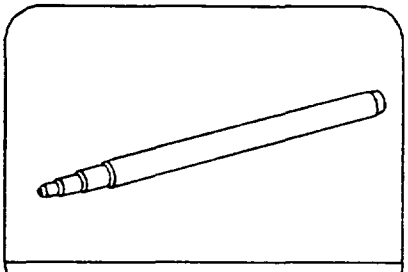

103 589 03 15 00

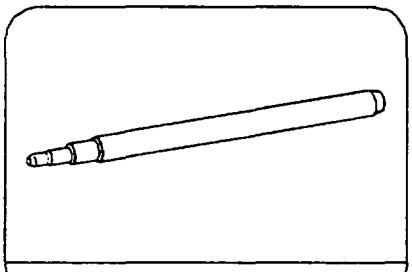

103 589 02 15 00

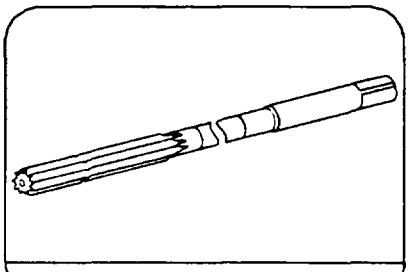

110 589 03 53 00

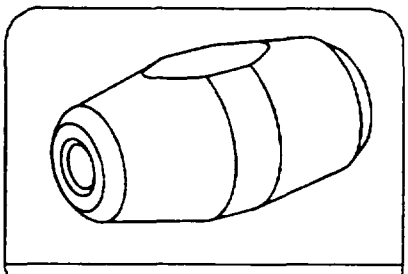

102 589 00 63 00

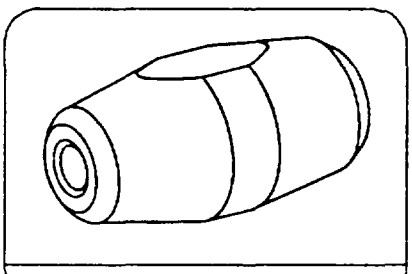

102 589 02 63 00

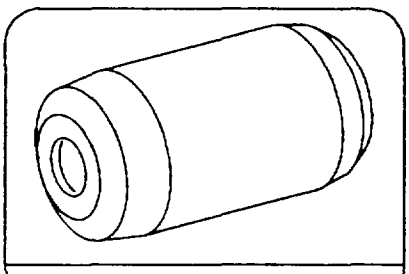

102 589 01 63 00

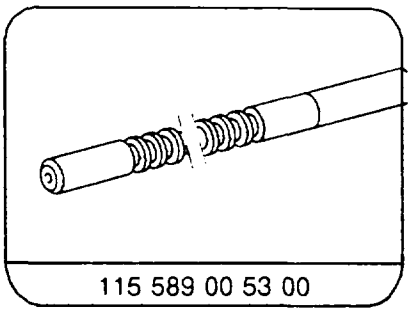

115 589 00 53 00

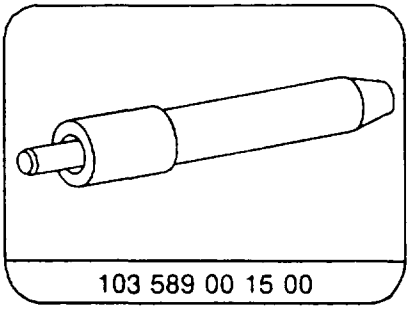

103 589 00 15 00

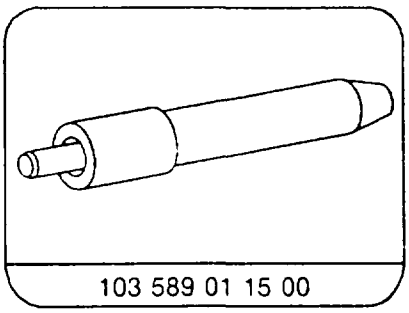

103 589 01 15 00

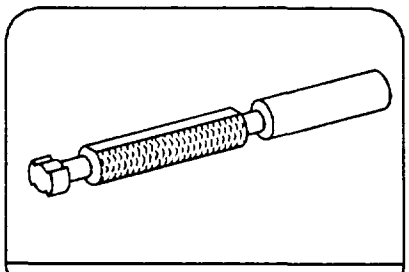

117 589 03 23 00

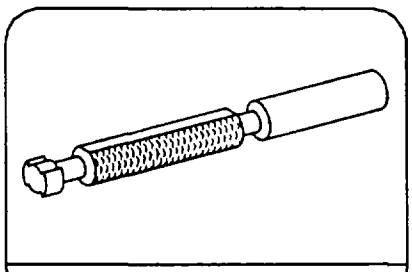

102 589 00 23 00

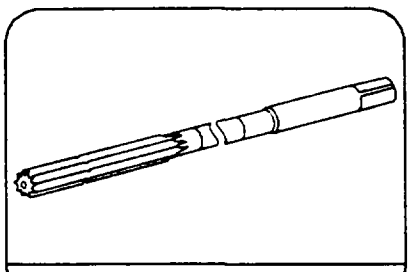

000 589 21 53 00

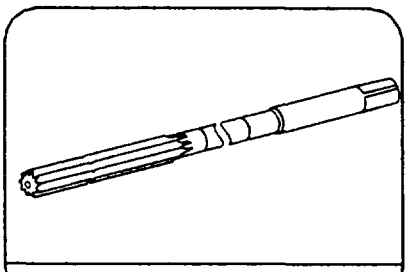

000 589 10 53 00

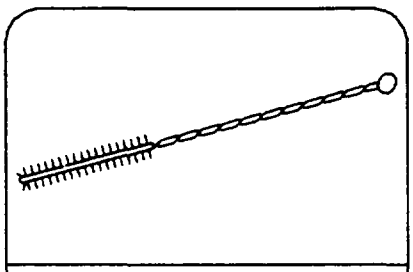

000 589 10 68 00

Commercially available tool

Cylinder head tensioning device	eg.	Hunger D–81375 München Order no. 221.60.000
Micrometer 0.25 mm		

Note
Inlet, exhaust valve guides made of improved material.

	1st version	2nd version
Inlet	brass-coloured	copper-coloured
Exhaust	brass-coloured	brass-coloured

Production breakpoint: December 1989

Model	Engine	Engine end no.	
		manual transmission	automatic transmission
124.026	103.940	029502	076413
124.030 124.050 124.090	103.983	035036	196370
124.226	103.943	000508	001192
124.230 124.290	103.985	002401	009671
126.020	103.941	004458	014693
126.024 126.025	103.981	007781	106846
201.029	103.942	016242	041289

05–2895 Checking valves

Preceding work:
Valves removed (05-2500).

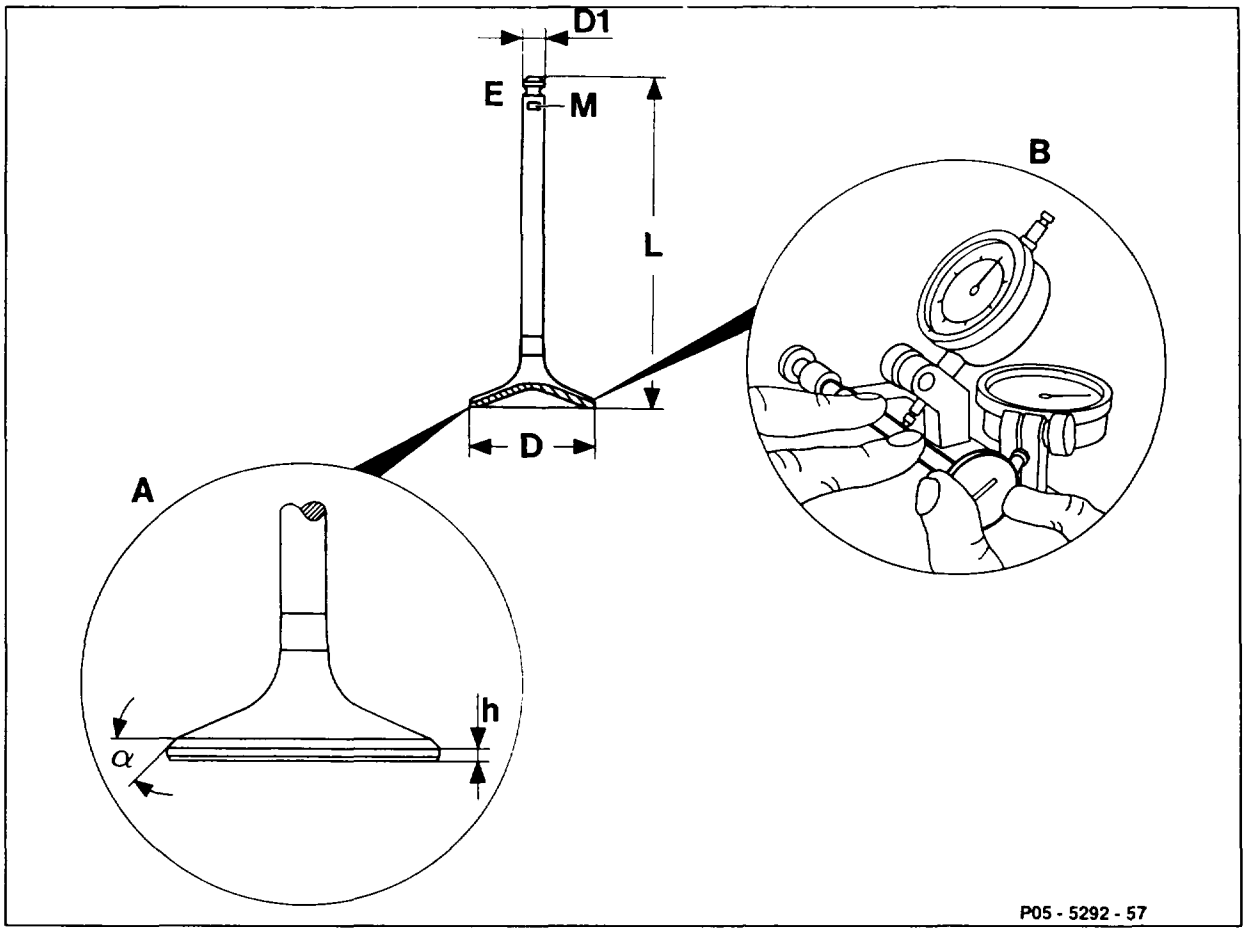

Valves ..... clean.

A Visual inspection

If valve disc scorched ..... replace valve.
If height "h" insufficient ..... replace valve.
If valve stem worn or scored ..... replace valve, see note.
Valve length (L) ..... check; if the length (L) is exceeded (refer to table), the valve has stretched and should be replaced.

B Clamping valve in chuck

Valve seat ..... check (see table for value).

Data

	Inlet valve		Exhaust valve	
Engine	103.94	103.98	103.94	103.98
Valve disc dia. D	40	43	35	39
Valve stem dia. D1	7.955 – 7.970		8.938 – 8.960	
Valve length L	110.2	110.2	112.4	110.9
Width of valve seat b	2.0			
Setting angle	45°			
Height "h" of valve disc	when new 1.7 limit value 1.2		when new 2.2 limit value 1.6	
Sodium filling	no		yes	
Permissible out-of-roundness at valve seat	0.03		0.03	
Marking "M" (at stem end)	E 103 15	E 103 20[1]) E 103 22[2])	A 103 04 27	A 103 17 27

[1]) Engine 103.981/983
[2]) Engine 103.985/987

Note

Modified exhaust valves engine 103.98.
Exhaust valves strenghtened in the transition range from valve stem to valve disc.
When performing repairs, install only valves with the marking (M) according to the table. Indefinite production breakpoint as of September 1988.

Modified inlet valves. When performing repairs, install only valves with the marking (M) according to table. Indefinite production breakpoint as of February 1990.

After machining or replacing the valves, the installation position of the hydraulic valve clearance compensating elements must be checked (05–2130).

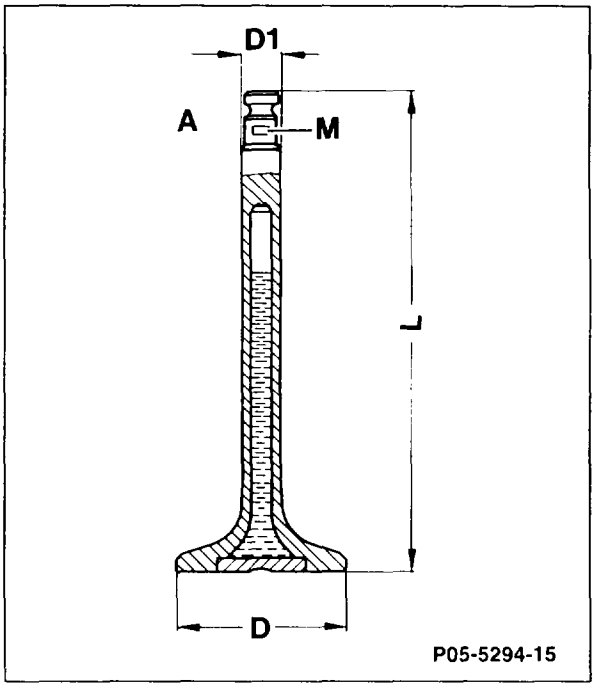

05–2900 Replacing valve seat rings

Preceding work:
Valve guides checked (05–2130)

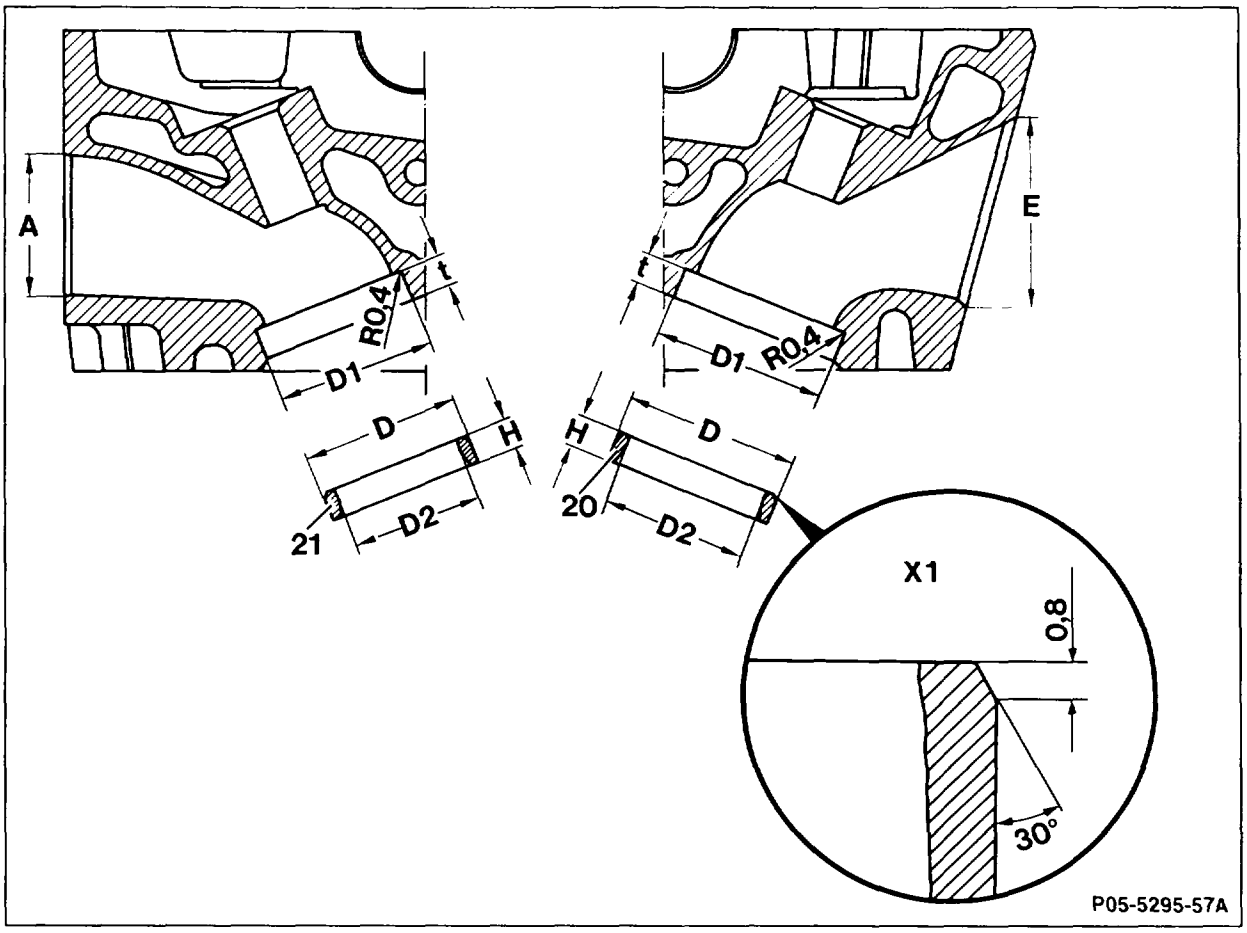

Valve seat rings (20 and 21)	remove with ring seat turning tool.
Operating instructions of tool manufacturer	note.
Basic bore dia. (D1)	measure with internal measuring instrument.
Valve seat rings (normal size or repair size)	select according to overlap.
For repair size	machine basic bore.
For repair size	machine valve seat rings according to basic bore in cylinder head, pay attention to overlap.
For repair size	turn chamfer (X1) on valve seat rings.
Valve seat ring	cool with liquid nitrogen and knock in with suitable drift.
Valve seats	machine (05–2910).

Engine	103.94		103.98	
Valve seat ring	Inlet	Exhaust	Inlet	Exhaust
D1 Standard size	42.50 – 42.52	37.50 – 37.52	45.50 – 45.52	41.50 – 41.52
D Standard size	42.59 – 42.60	37.59 –37.60	49.59 – 45.60	41.59 – 41.60
Overlap of valve seat rings in cylinder head	0.07 – 0.10		0.07 – 0.10	
H	8.12 – 8.20		8.12 – 8.20	
t	7.8 – 8.2		7.8 – 8.2	
D2	36.2	31.2	39.2	35.2

Commercially available tools

Cylinder head clamping device	eg.	Hunger, D–81375 München Order no. 221.60.000
Ring seat turning tool (size 2)	eg.	Hunger, D–81375 München Order no. 220.03.110
Valve seat turning tool	eg.	Hunger, D–81375 München Type VDSN 1/45/30, Order no. 236.03.308
Test kit for valve seats	eg.	Hunger, D–81375 München Order no. 216.93.300
Internal measuring instrument (range 35 – 100 mm)		
External micrometer (range 25 – 50 mm)		

05–2910 Machining valve seat rings

Preceding work:
Valve guides checked (05–2845)

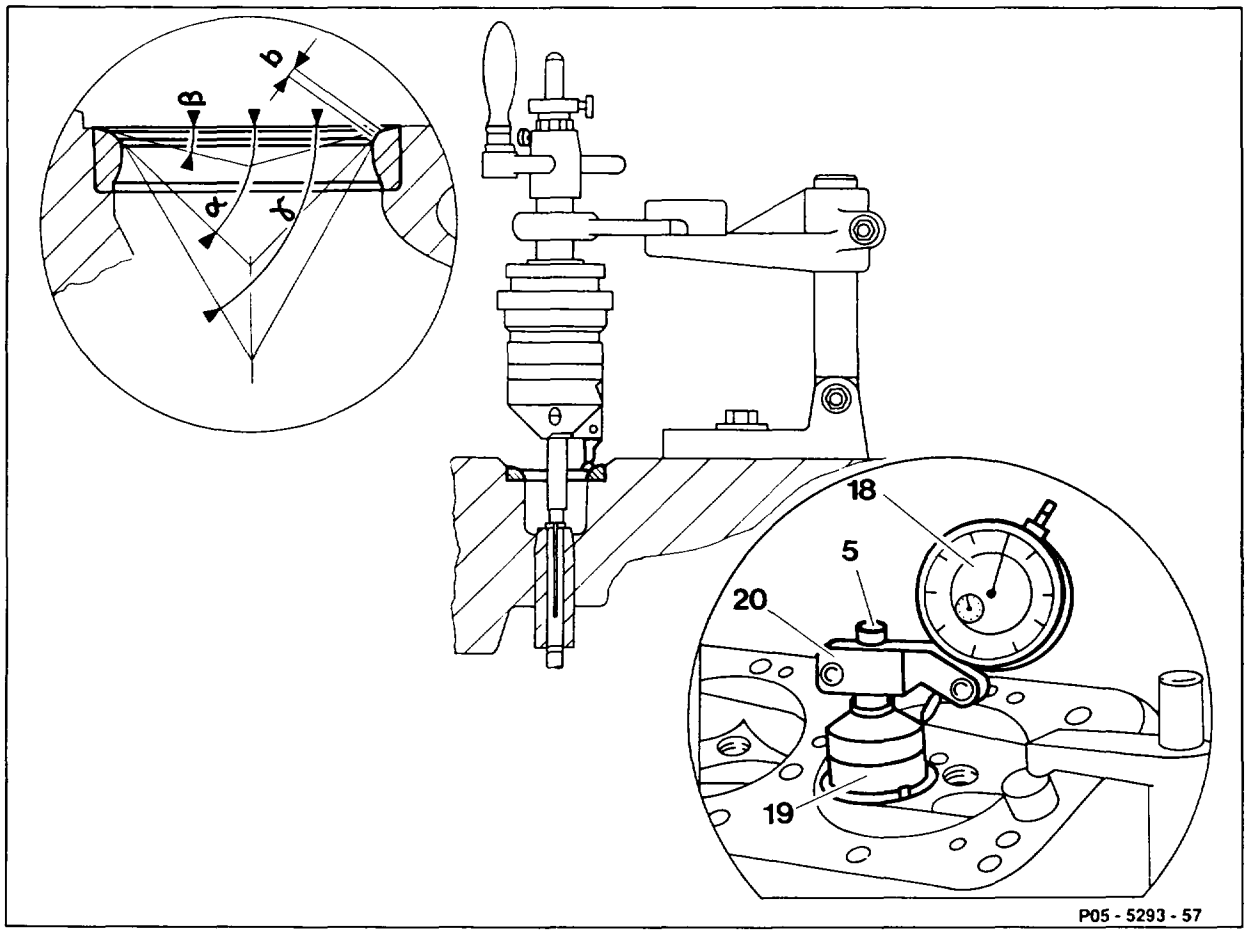

Valve seats	machine.
Operating instructions of tool manufacturer	note.
Dimensions according to table	observe.
Leaktightness with valve installed	check.
Valve seat width (b)	measure.
If necessary correct valve seat width (b) with correction tool 13 (Make Hunger)	(angles ß and γ).
Valves	insert and measure distance (A) and (S).
Basic position of hydraulic valve clearance compensating elements	check (05–2130).

Data	Inlet	Exhaust
Valve seat width (b)	1.8 – 2.5 mm	1.5 – 2.5 mm
Valve seat angle (α)	45°	
Top correction angle (β)	15°	
Bottom correction angle (γ)	60°	
Permissible deviation in concentricity of valve seat	0.05 mm	

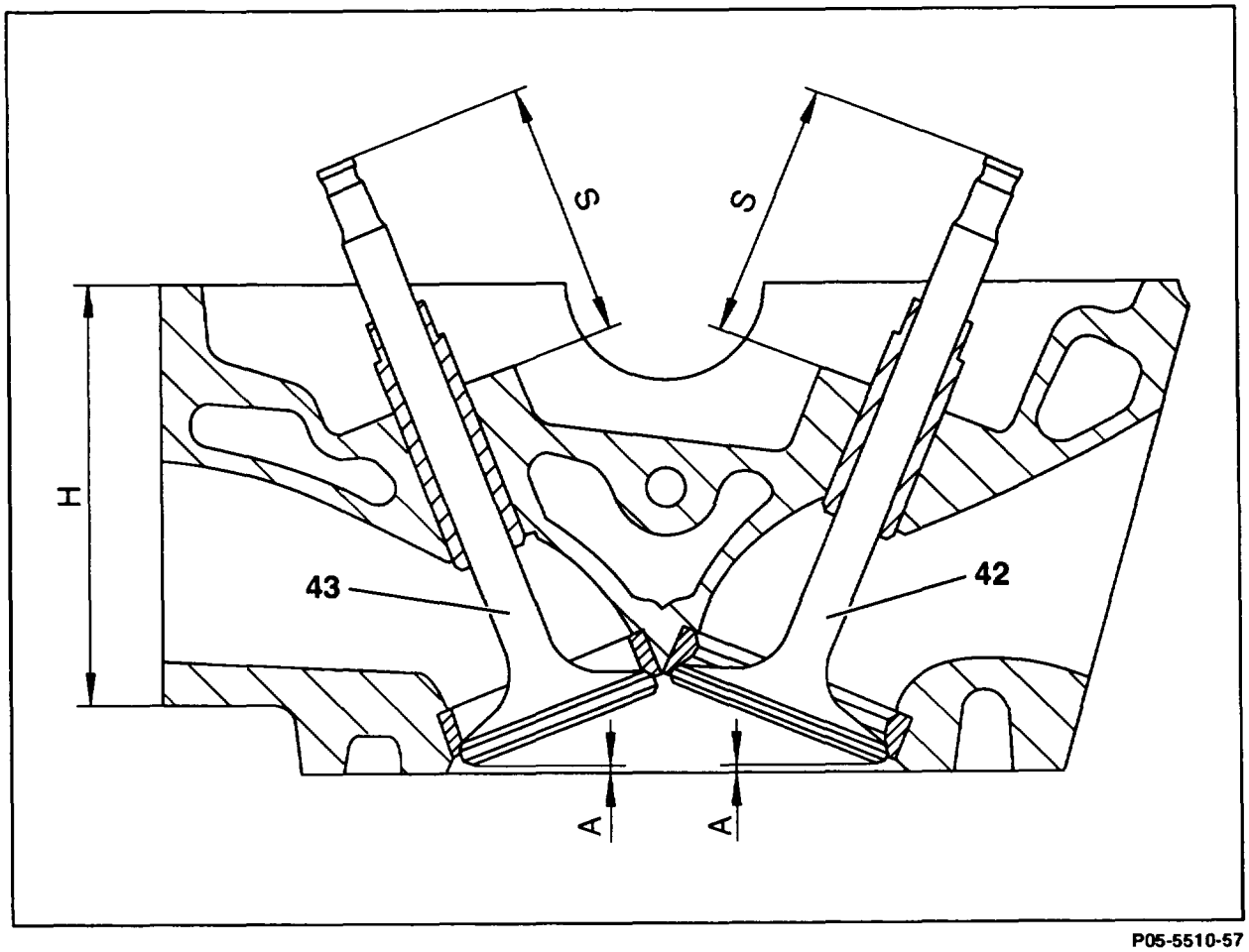

P05-5510-57

Valve clearance relative to cylinder head contact surface and from end of valve stem to contact surface of cylinder head in mm

Engines		103.94	103.98
Minimum distance "A" with new valve seat rings and new valves	Inlet (42)	2.4	1.3
	Exhaust (43)	2.8	1.4
Maximum distance "A" with machined valve seat rings and machined valves	Inlet (42)	3.1	2.0
	Exhaust (43)	3.5	2.1
Distance "S" from end of valve stem to contact surface of cylinder head [1]	Inlet (42)	45.7 – 46.5	45.7 – 46.5
	Exhaust (43)	45.7 – 46.5	45.7 – 46.5

[1] On engine 103.983 AMG the valve contact surfaces on the cylinder head at the inlet and exhaust valves are lowered by 0.5 mm

Commercially available tool

Cylinder head clamping device	eg.	Hunger, D–81309 München 70 Order no. 221.60.000
Valve seat turning tool	eg.	Hunger, D–81309 München 70 Type VDSN 1/45/30, Order no. 236.03.308
Test kit for valve seats	eg.	Hunger, D–81309 München 70 Order no. 216.93.300
60° correction tool no. 13 for bottom correction angle (γ)	eg.	Hunger, D–81309 München 70 Order no. 216.64.622

05–3100 Removing and installing chain tensioner

Preceding work:
Warning instructions when hood open (01-0085).

Operation no. of operation texts and work units or standard texts and flat rates
05–7800, 05–7801

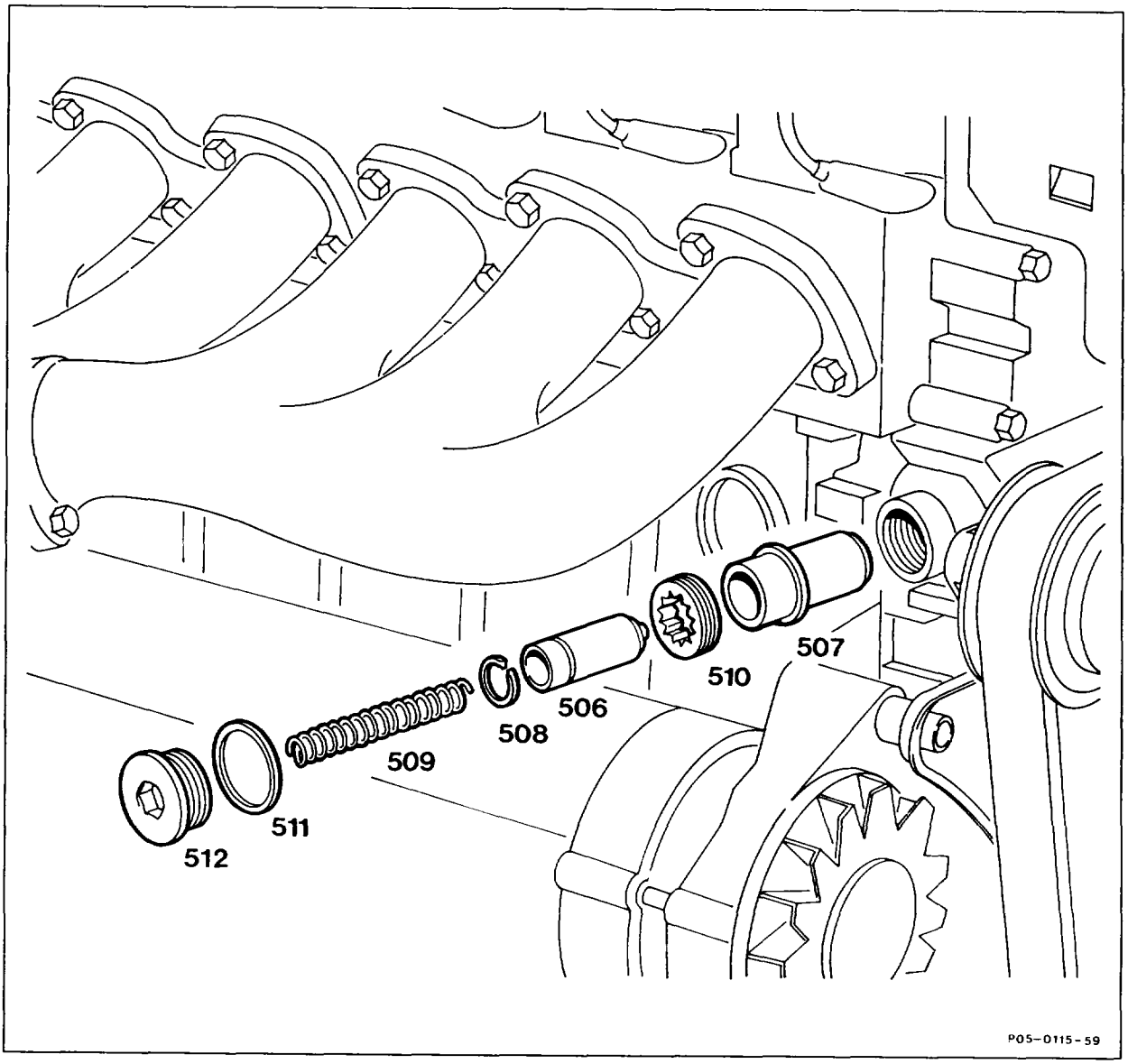

Screw plug (512) with seal (511) and compression spring (509)	unscrew, take out (step 1).
Threaded ring (510)	unscrew (step 2).
Chain tensioner housing (507) with pressure pin (506)	withdraw (step 3).
Pressure pin (506) with detent spring (508)	press out of chain tensioner housing (507) in direction of pressure (step 4).

Chain tensioner housing (507)	insert into mounting hole (step 5).
Threaded ring (510)	screw in, tighten, 30 Nm (step 6).
Pressure pin (506) with detent spring (508) and compression spring (509)	insert (step 7).
Screw plug (512)	screw in, tighten, 50 Nm. Renew seal (511) (step 8).
Leaktightness	check.

Special tool

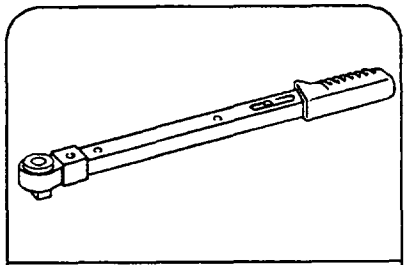

001 589 66 21 00

Commercial tools

Pin wrench insert 17 mm, 1/2" square	eg.	Hazet, D–42857 Remscheid Order No. 985/17
Pin wrench insert 12 mm, 1/2" square	eg.	Hazet, D–42857 Remscheid Order No. 985/12

Removal, installation

1 Unscrew plug (512) together with seal (511). Take out compression spring (509).

⚠

The screw plug is pressurized by the compression spring.

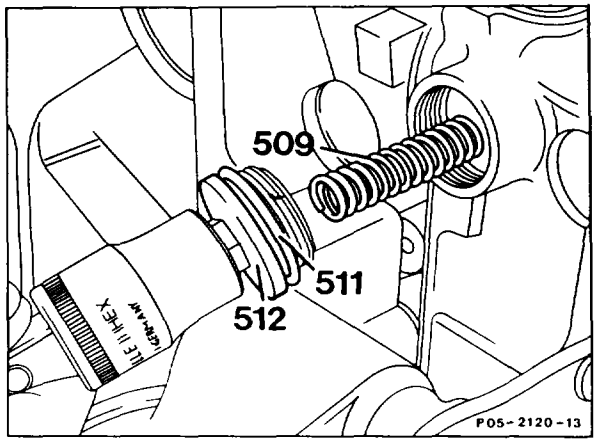

2 Unscrew threaded ring (510).

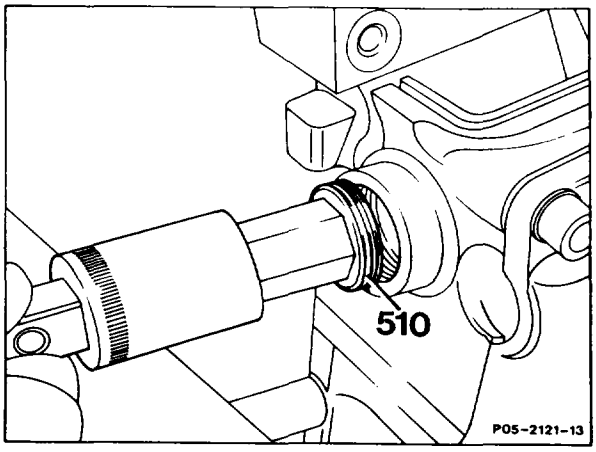

3 Withdraw chain tensioner, eg. with the aid of an M8 bolt (arrow).
The M8 bolt cannot be screwed in but should only be angled.

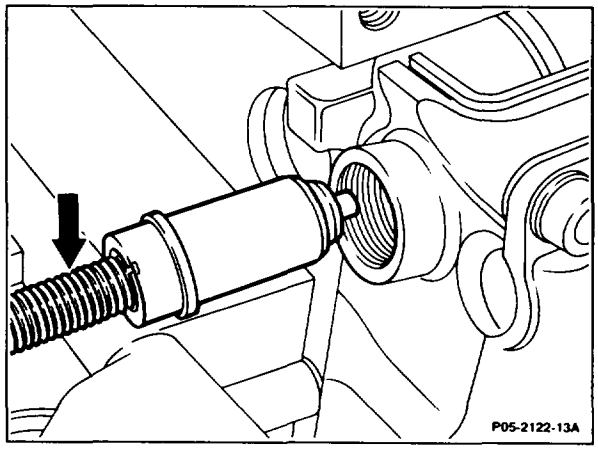

⚠

4 Chain tensioner must be disassembled before installing. This is done by pressing the pressure pin (506) with detent spring (508) out of the chain tensioner housing (507) in direction of arrow. Thoroughly clean all parts.

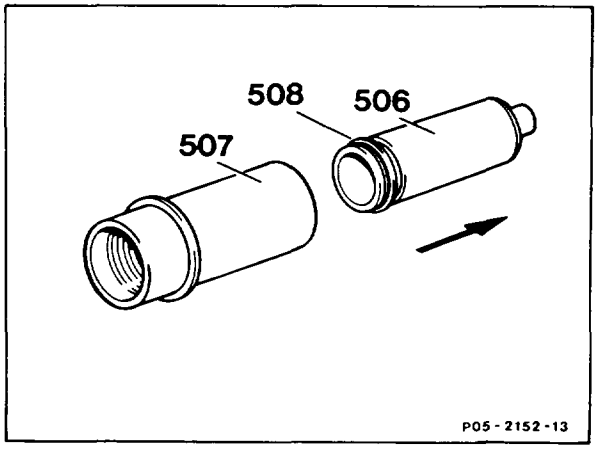

5 Insert chain tensioner housing (507) into mounting hole.

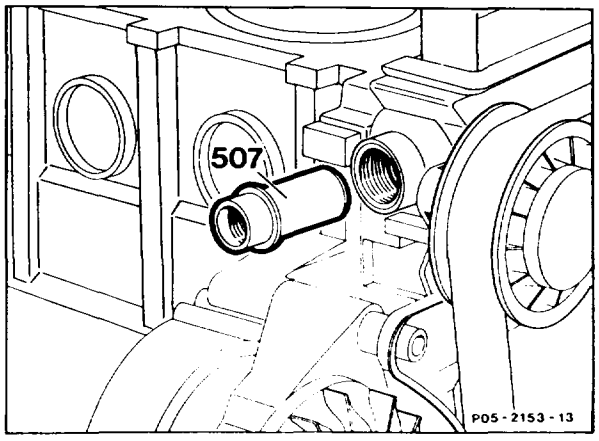

6 Screw in threaded ring (510), tightening torque 30 Nm.

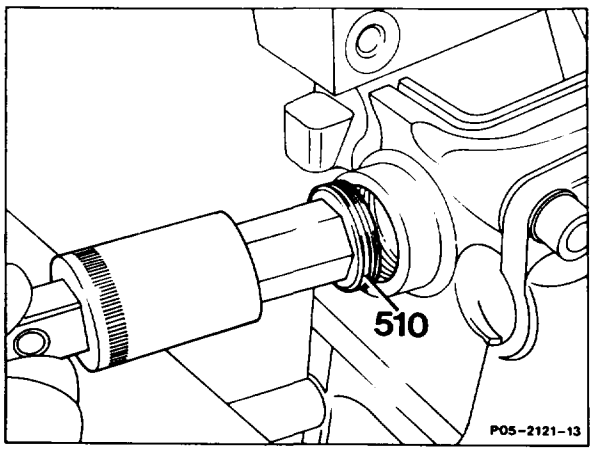

7 Insert pressure pin (506) with detent spring (508) into the assembled chain tensioner housing.

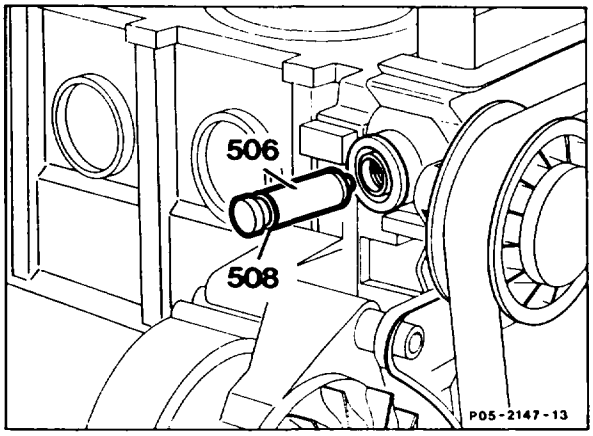

8 Install compression spring (509) and screw plug (512) with new seal (511). Tighten screw plug (512) to 50 Nm.

9 Run engine and check for signs of leaks.

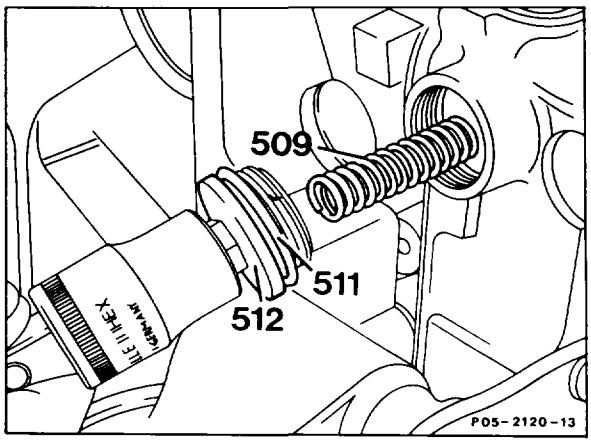

05–3200 Replacing timing chain

Preceding work:
Front cover at top removed (01–2120).
Chain tensioner removed (05–3100).

Operation no. of operation texts and work units or standard texts and flat rates
05–7601

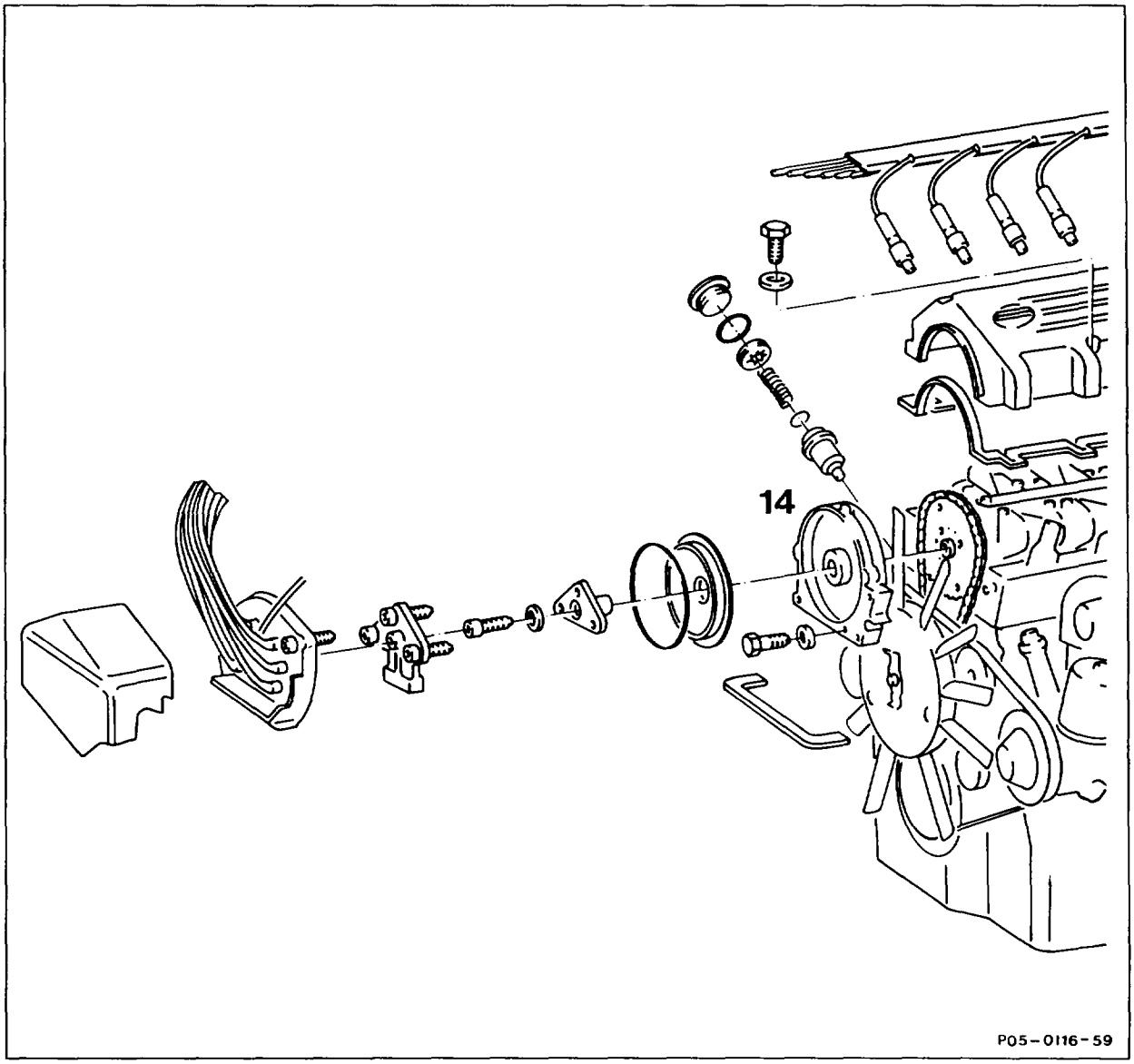

All spark plugs	remove, install (15-1031)
Chain pin	grind open (step 4).
New timing chain to old timing chain	connect, draw in (steps 5 – 7).
New timing chain to rivet link	connect (step 8).
Plate	insert into rivet set 103 589 01 63 00 and rivet tool 000 589 58 43 00, press on (steps 9 – 13).

Riveting tool	take off, change over (step 14).
Pins of rivet link	rivet individually, 30 Nm (steps 15 and 16).
Installation	in the reverse order.

Note

Modifications to timing chain

The sleeves (2) have recesses (jogs, arrow and A) and widened sleeve ends.

This results in improved oil supply and reduced friction between sleeves (2) and pins (3).

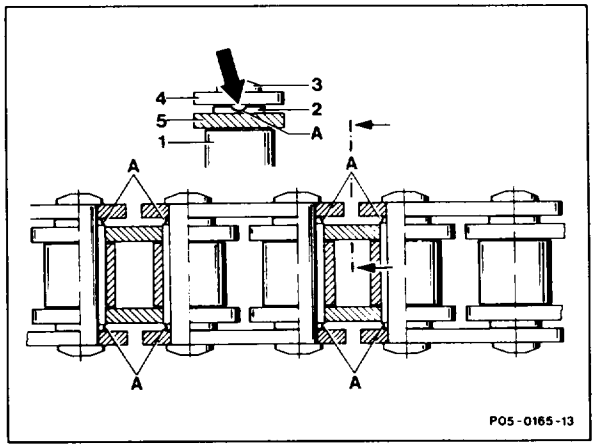

Improved timing chain, production breakpoint: 08/1988

Model	Engine	Engine End No.		Vehicle Ident End No.	
		manual transmission	automatic transmission	A	F
107.041	103.982	002026	008832	*	*
124.026	103.940	023017	051576	*	*
124.030 124.050 124.090	103.983	025192	130645	*	*
124.226	103.943	000298	000677	*	*
124.230 124.290	103.985	001409	005003	*	*
126.020	103.941	003581	012074	*	*
126.024 126.025	103.981	006008	064685	*	*
201.029	103.942	011021	014791	*	*

* not recorded

Special tools

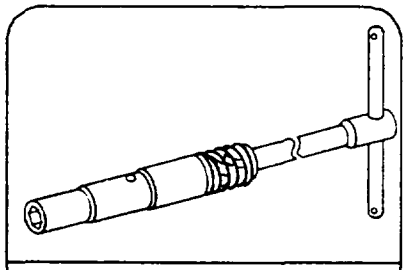
102 589 01 09 00

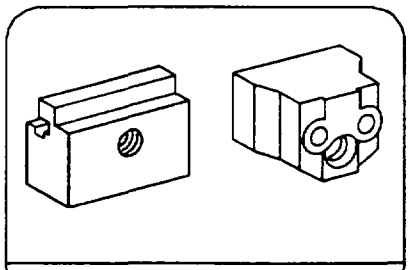
103 589 01 63 00

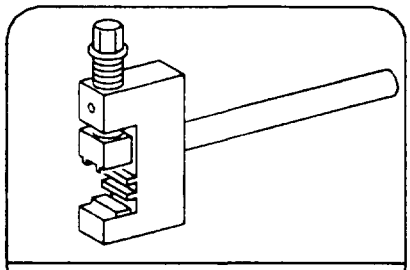
000 589 58 43 00

Renewal

1 Detach all spark plug connectors.

2 Blow out spark plug recesses with compressed air.

3 Unscrew all spark plugs.

Installation instruction
Tightening torque 20 Nm.

4 Cover over the exposed part of the chain box with a clean cloth and grind open both chain pins (arrows) **at a double link** of the timing chain.

5 Attach new timing chain with the rivet link to the old timing chain.
This is done by pressing out the ground-open double link.

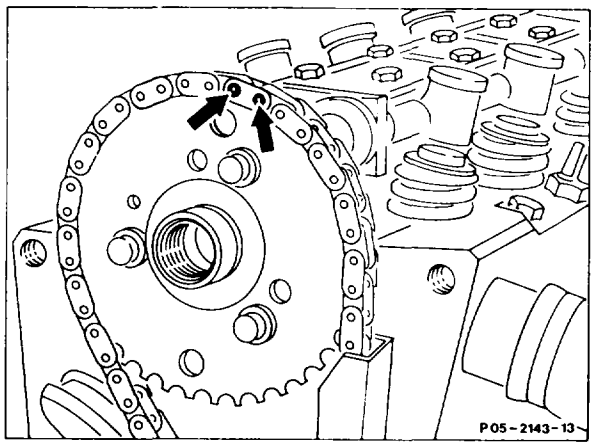

6 Fit new timing chain connected to old timing chain onto the camshaft gear. Slowly rotate crankshaft in direction of rotation of engine.

⚠

The timing chain must remain meshed when turning the camshaft gear.

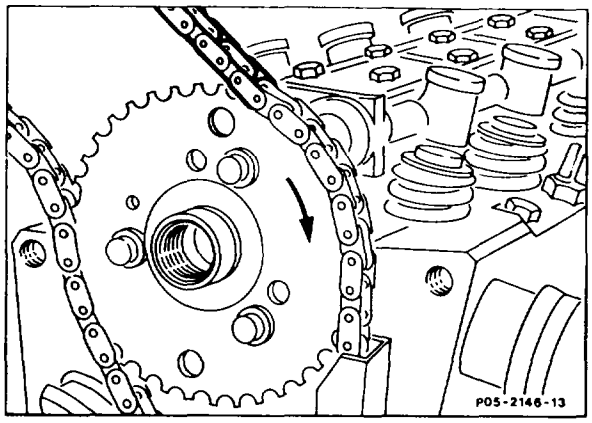

7 Pull out the exposed end of the old timing chain evenly to the same extent as the new timing chain is drawn in.

8 Continue rotating crankshaft long enough until the ends of the new timing chain can be connected to the rivet link.

Note

Rivet link must be inserted from behind.

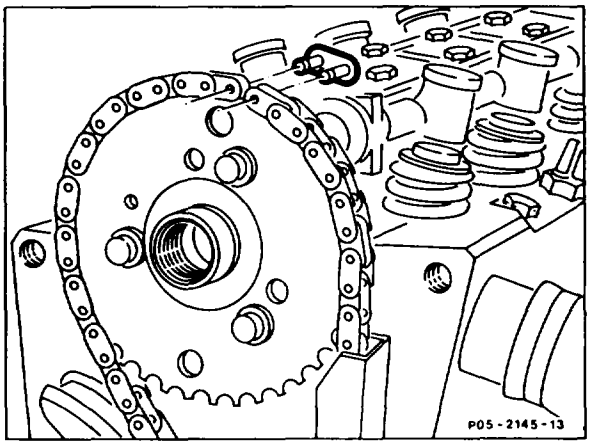

9 Insert cheek pieces (03) 103 589 01 63 00 into the rivet tool 000 589 58 43 00 as shown in drawing and tighten with the screw (arrow).

Note

The number 2 is stamped on the side of the cheeks (03) 103 589 01 63 00.

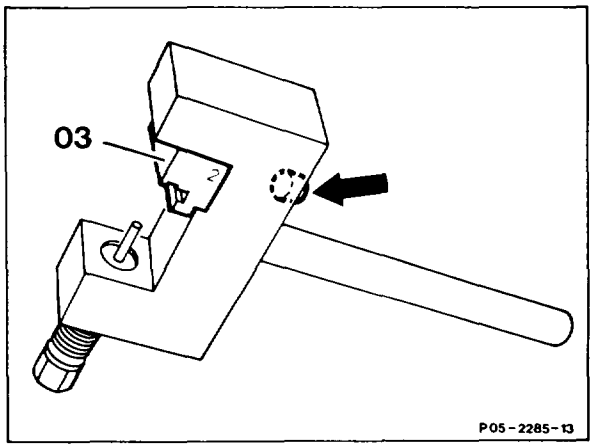

10 Insert moving thrust piece (02) 103 589 01 63 00 with the number 2 into the rivet tool 000 589 58 43 00 as shown in the drawing.

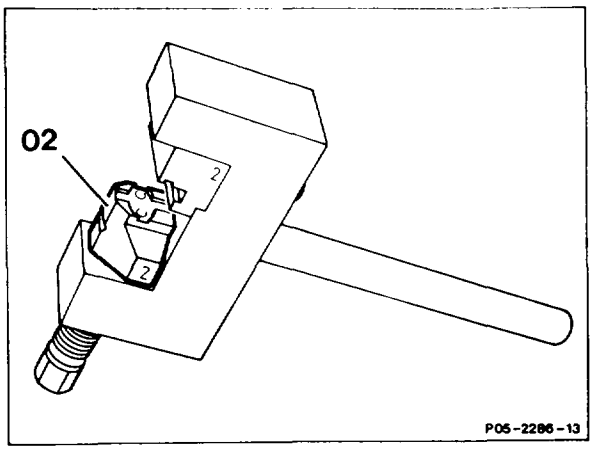

11 Insert plate (arrow) into the moving thrust piece (02) 103 589 01 63 00.

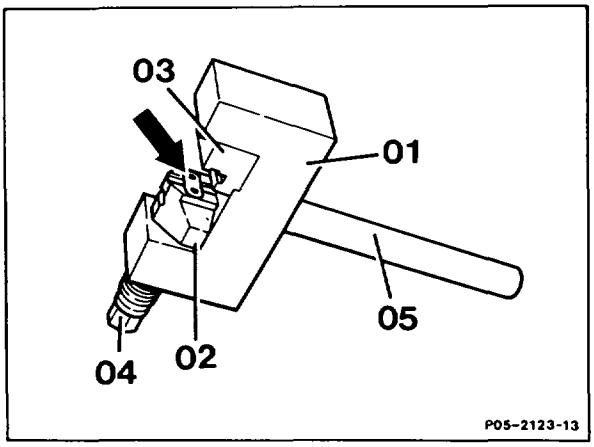

12 Fit web (arrow) onto both rollers on the rivet link.

Note
Rivet heads of the rivet link pins must be guided into the slot (C).

13 Screw in spindle (04) until a firm resistance is felt.

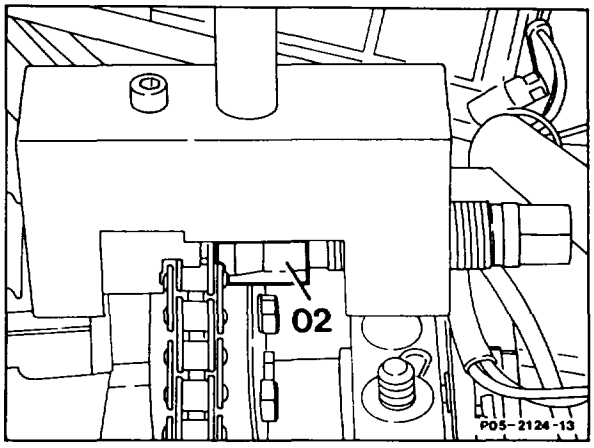

Note
When screwing in, ensure that the pins of the rivet link can be guided into the holes of the plate.

14 Take off riveting tool 000 589 58 43 00 and change over the moving thrust piece (02) 103 589 01 63 00 to the rivet profile (D).

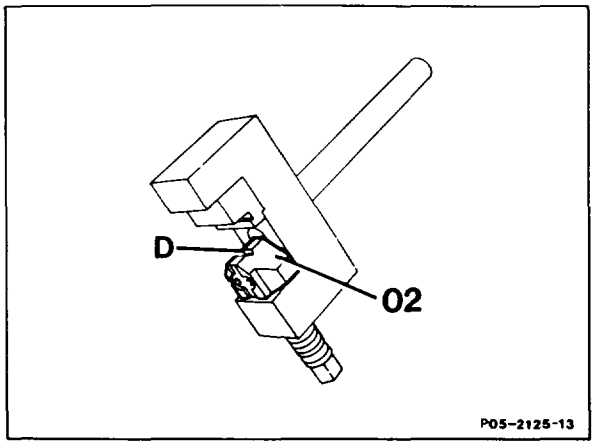

15 Position riveting tool 000 589 58 43 00 exactly over centre of pin.
Rivet pins of the rivet link individually by tightening the spindle (04) to approx. 25 Nm.

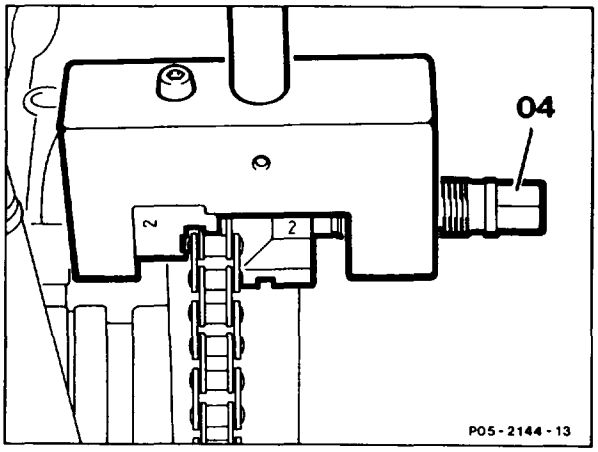

16 Check riveting (arrows); re-rivet if necessary.

Installation is performed in the reverse order.

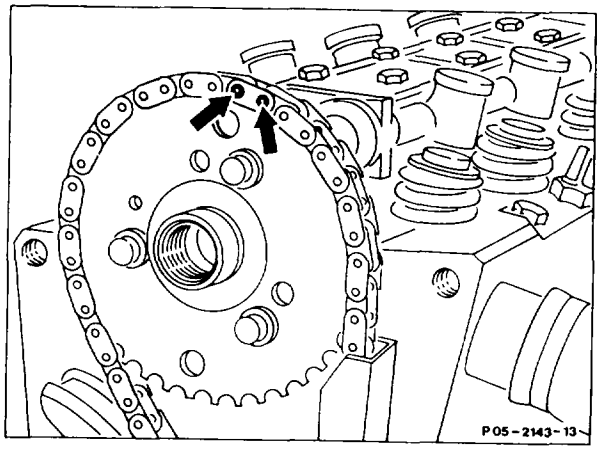

05–3300 Removing and installing tensioning rail

Preceding work:
Timing case cover removed (01–2100).

Operation no. of operation texts and work units or standard texts and flat rates
05–8121

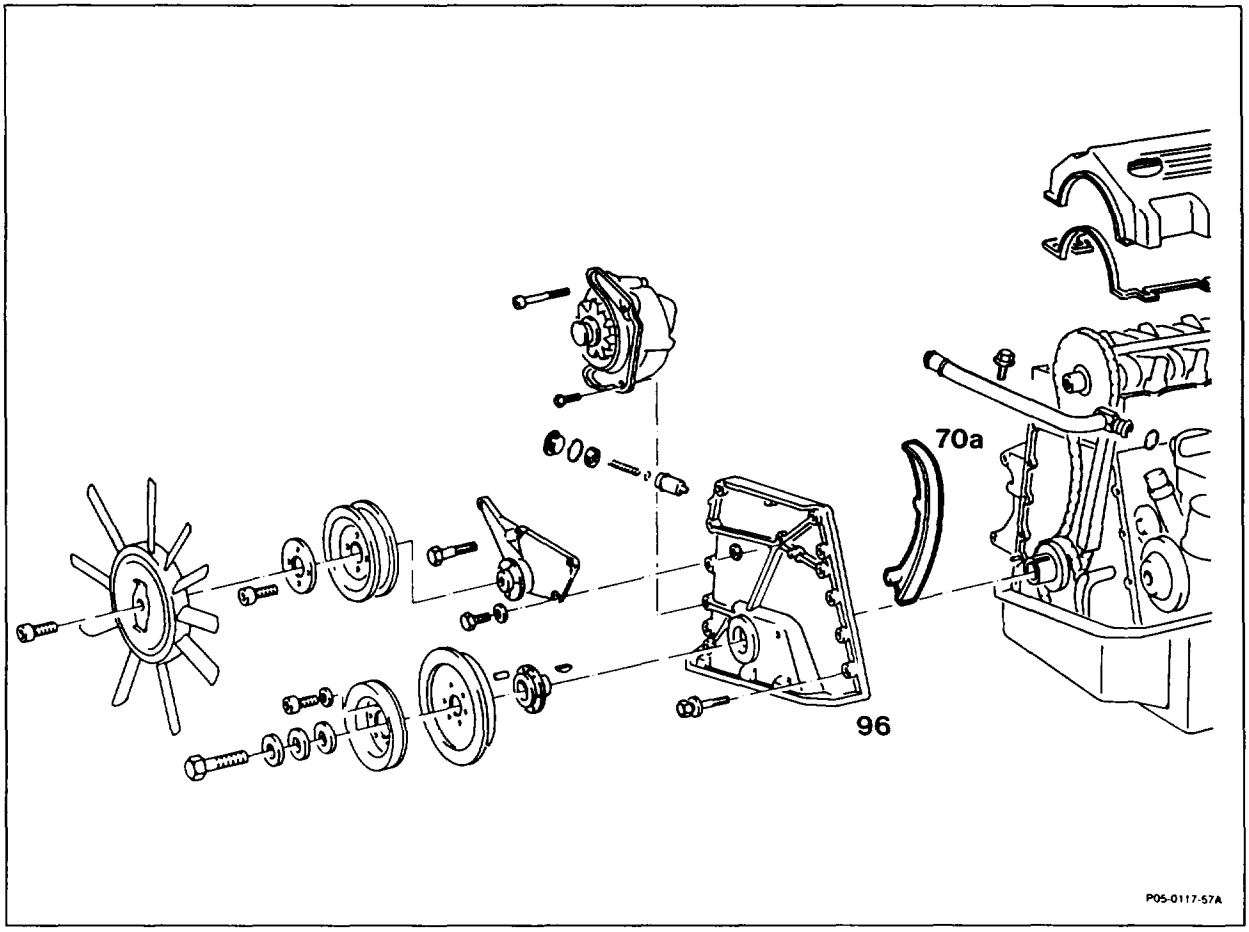

Timing chain with crankshaft gear	mark (step 1).
Tensioning rail (70a)	remove, install (step 2).
Setting of camshaft	check.
Installation	in the reverse order.

Removal, installation

1 Mark timing chain with crankshaft gear (arrows).

2 Take off tensioning rail (70a).

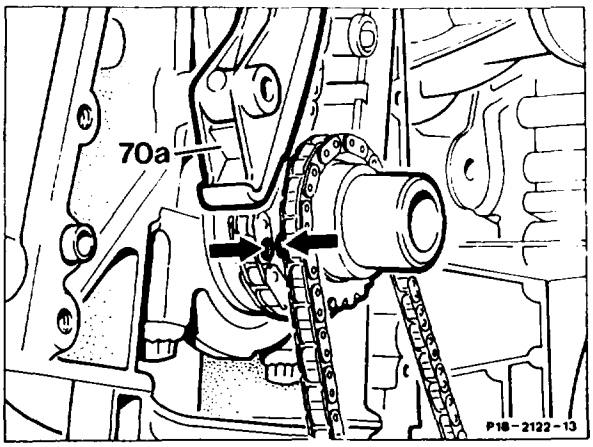

Installation instruction

Position piston of cylinder 1 to TDC (arrow).

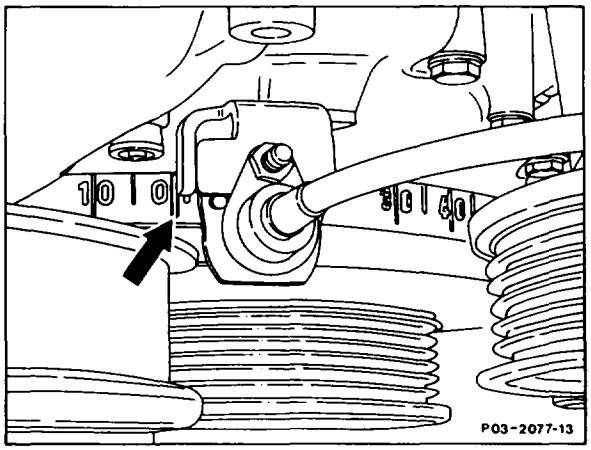

Position marking (22) or position hole of camshaft must be aligned with the marking (517) on 1st camshaft bearing.

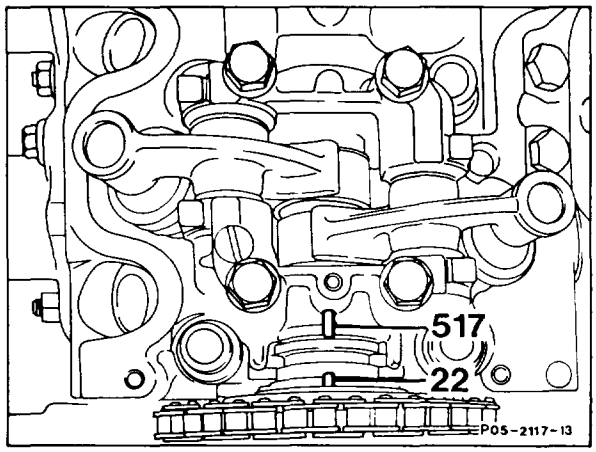

Effective 12/86 a positioning hole (21) is provided in place of the pin (22).

Installation is performed in the reverse order.

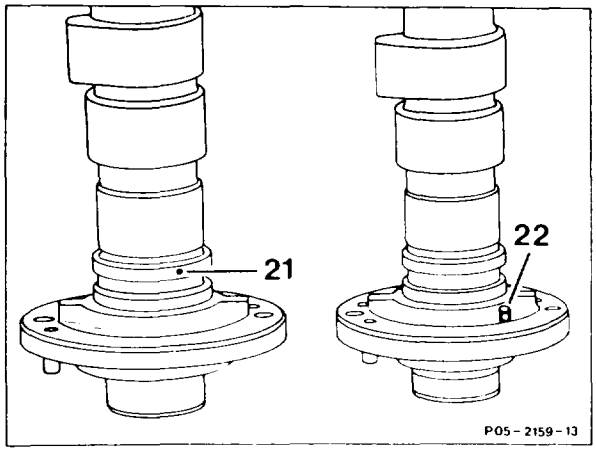

05–3350 Removing and installing guide rail

Preceding work:
Cylinder head cover removed (01-0500).

Operation no. of operation texts and work units or standard texts and flat rates

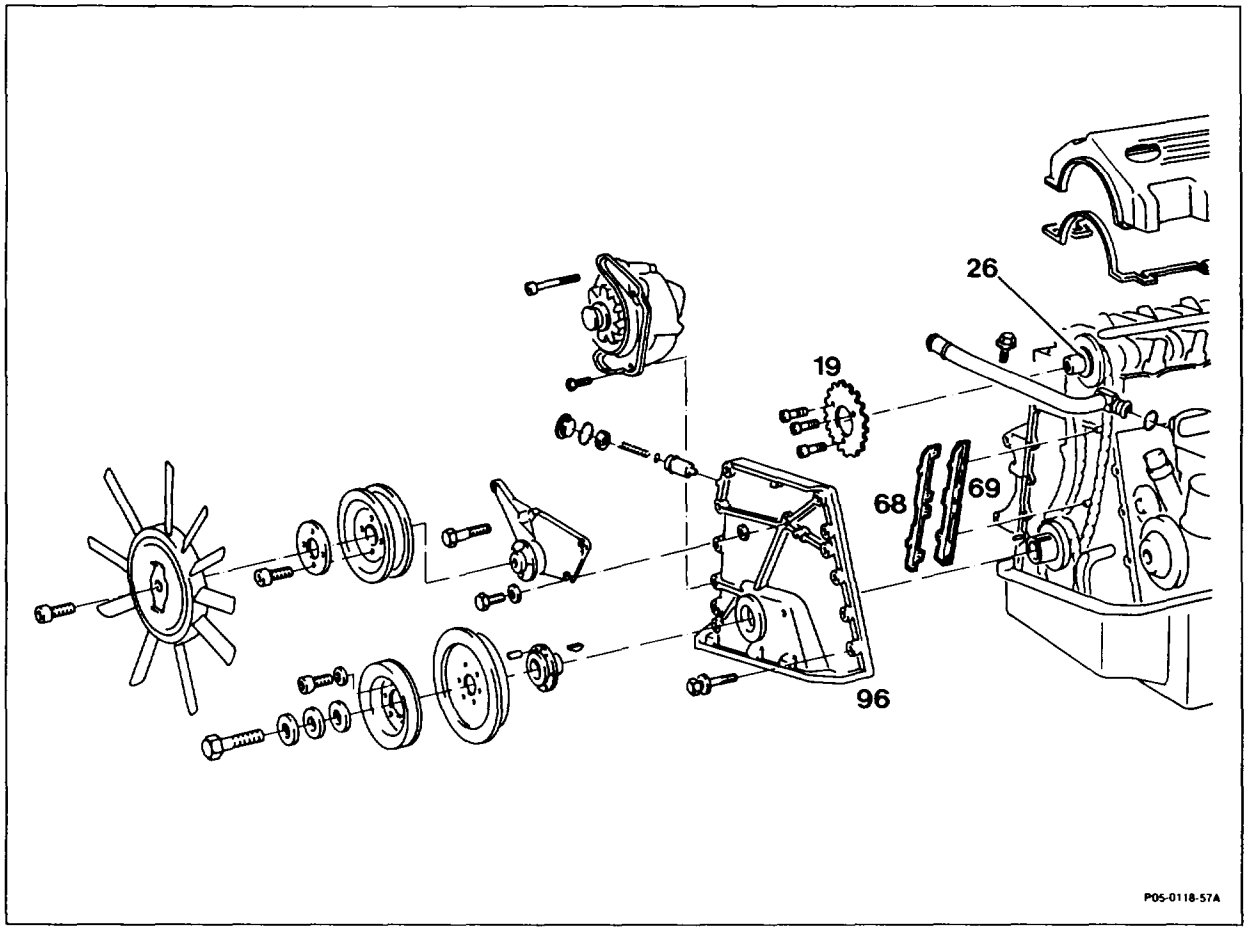

Piston of cylinder 1	set to TDC (step 1).
Timing case cover (96)	remove, install (01–2100)
Camshaft gear (19) relative to camshaft (26)	mark, detach and attach (05-2200)
Guide rail (68, 69)	remove, install (step 5).

Removal, installation

1 Position piston of cylinder 1 to TDC (arrow).

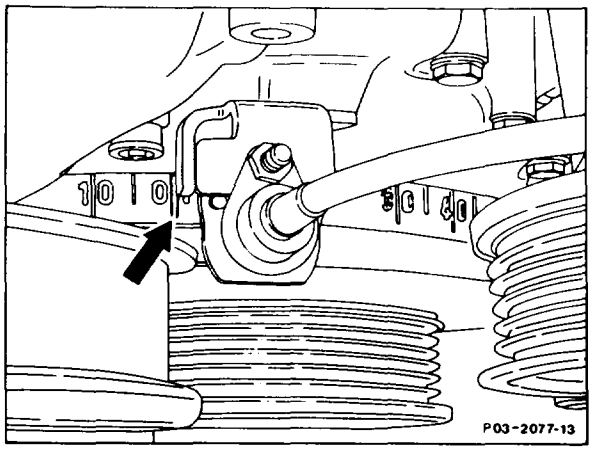

2 Remove timing case cover (01–2100).

3 Mark camshaft sprocket relative to camshaft (arrows).

4 Remove camshaft sprocket (05-2200).

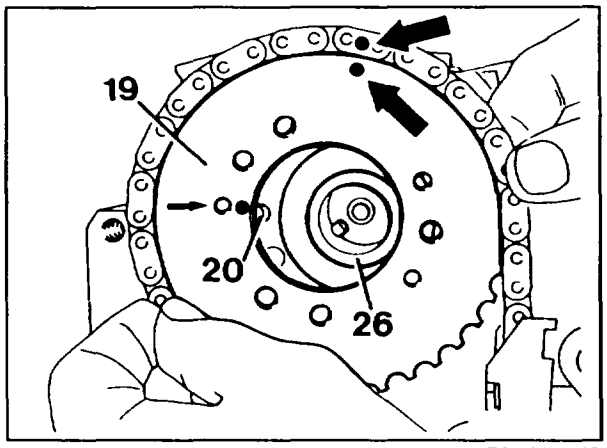

20 Locating pin
26 Camshaft

P05-2115-13

5 Unclip retaining lugs in direction of arrow and remove guide rail (68a).

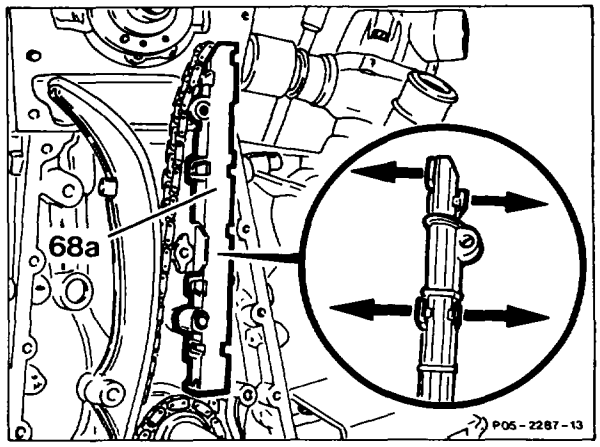

Install in the reverse order.

05–4600 Removing and installing crankshaft gear

Preceding work:
Warning instructions when hood open (01-0085).
Timing case cover removed (01–2100).

Operation no. of operation texts and work units or standard texts and flat rates

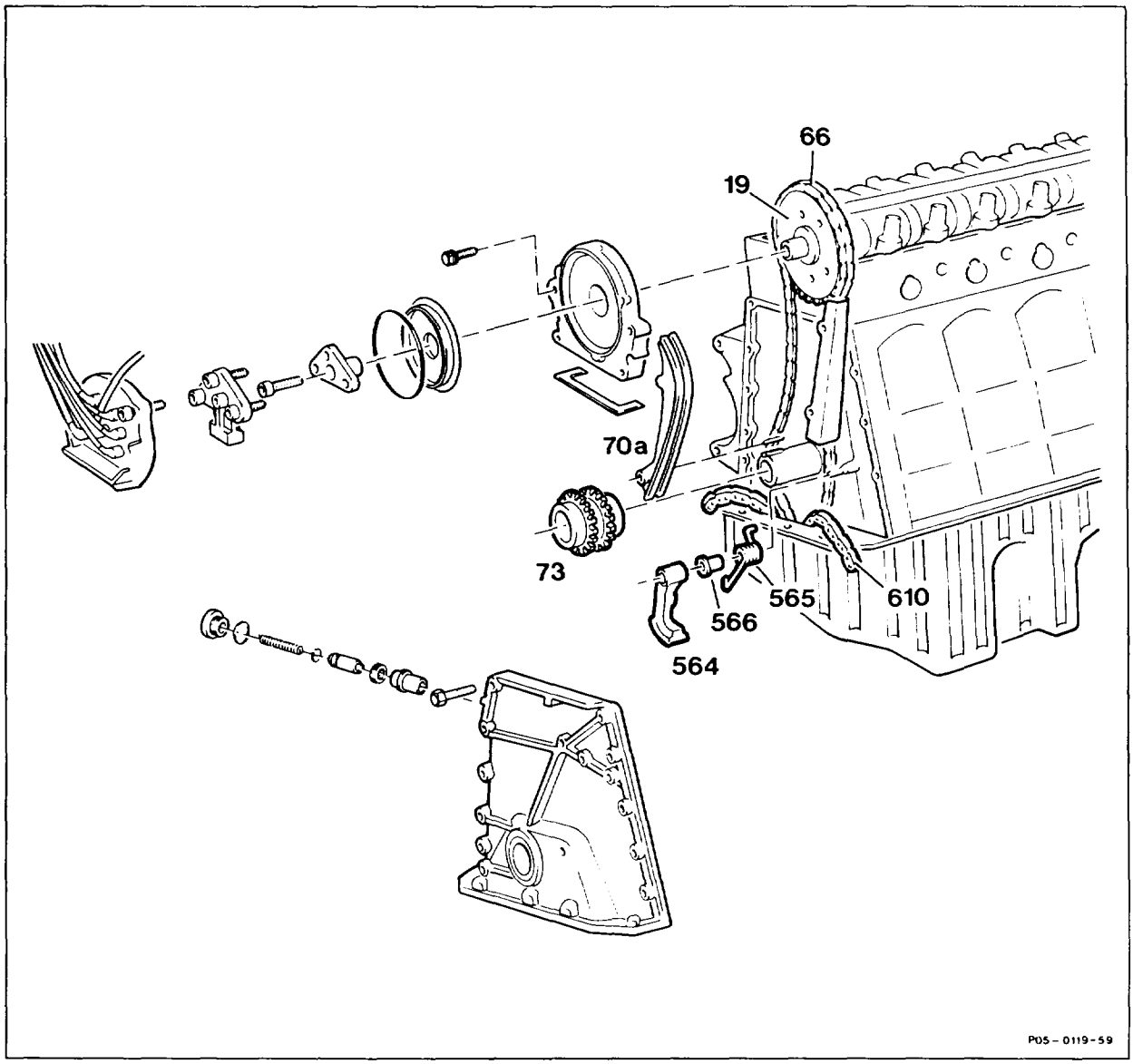

Piston of cylinder 1	set to TDC (step 1).
Tensioning rail (70a)	remove, install (05–3300) (steps 2, 20).
Tensioning bracket (564), spring (565) with bush (566)	pull off (steps 3 – 4).
Oil pump chain (610)	grind open rivet link pins (step 5).
Timing chain (66) relative to camshaft gear (19)	mark, take off (step 6).
Crankshaft gear (73)	pull off with puller 615 589 01 33 00 (step 7).

Crankshaft gear (73)	heat, fit on (step 8).
Timing chain (66)	fit onto camshaft gear (19) (step 9).
Oil pump chain (610)	fit onto crankshaft gear (73) and insert rivet link into oil pump chain from behind (step 10). Insert plate into rivet set 103 589 01 63 00 and into riveting tool 000 589 58 43 00, press on (steps 11 – 15).
Rivet link pins of oil pump chain	rivet individually (steps 16 – 18), 25 Nm.
Spring (565), bush (566) and tensioning bracket (564)	install (step 19).
Installation	in the reverse order.
Engine	check for signs of leaks.

Special tools

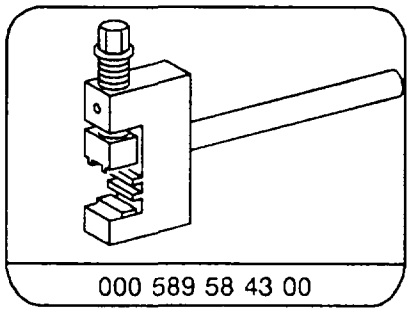

000 589 58 43 00

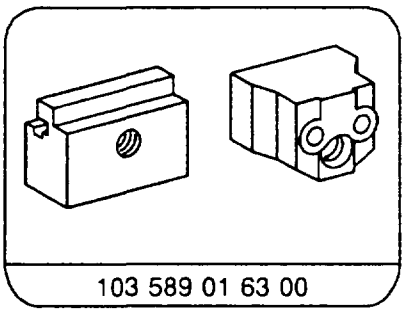

103 589 01 63 00

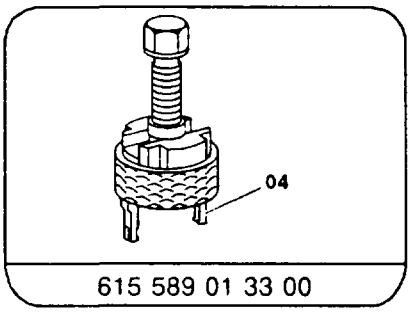

615 589 01 33 00

Note

When renewing a crankshaft gear, timing gear and camshaft gear must also be renewed.

Removal

1 Set piston of cylinder 1 to TDC.

2 Remove tensioning rail (05–330).

3 Cover over oil sump with clean cloths.

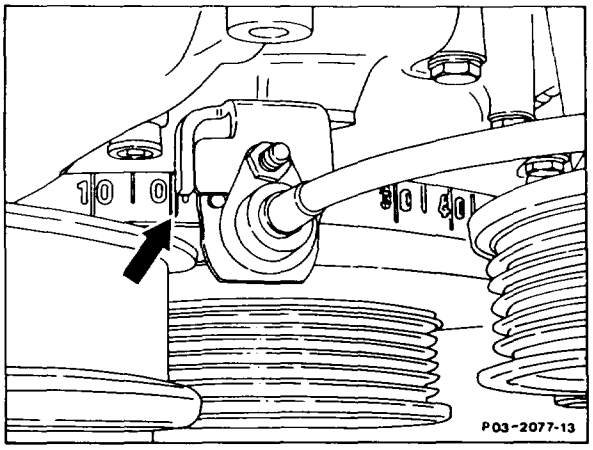

4 Pull off tensioning bracket (564), spring (565) together with bush (566).

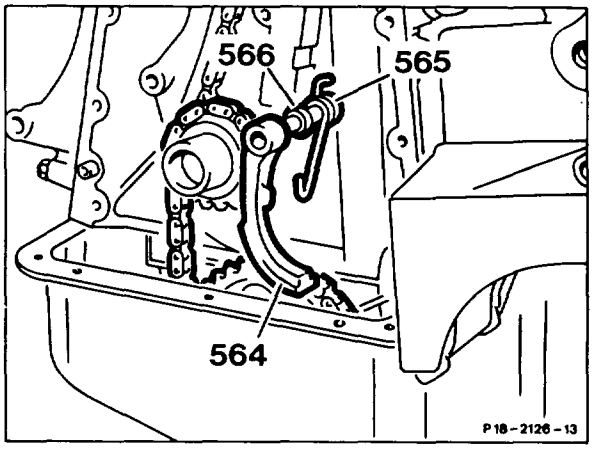

5 Grind open both rivet link pins (arrows) on a double link of the oil pump chain (610).
Press out ground-open double link.

Note
Do not take oil pump chain off the oil pump drive gear, tie on left and right with wire.

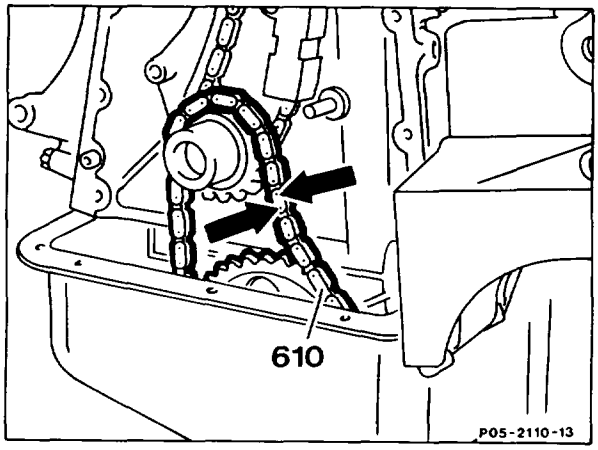

6 Mark position of timing chain (66) relative to camshaft gear (19) with a coloured pen.
Take timing chain off camshaft gear (19) in direction of arrow.

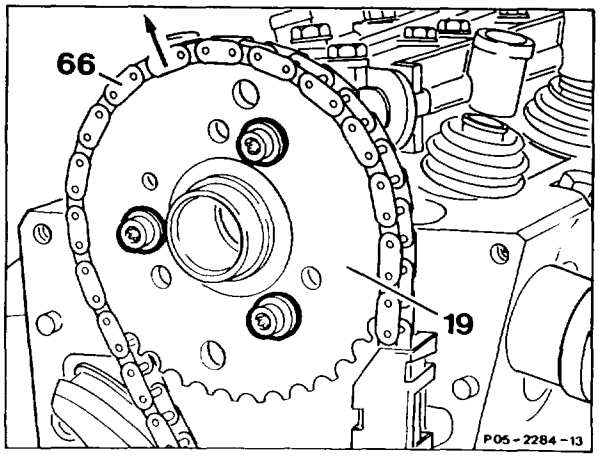

7 Pull off crankshaft gear (73) with puller 615 589 01 33 00.

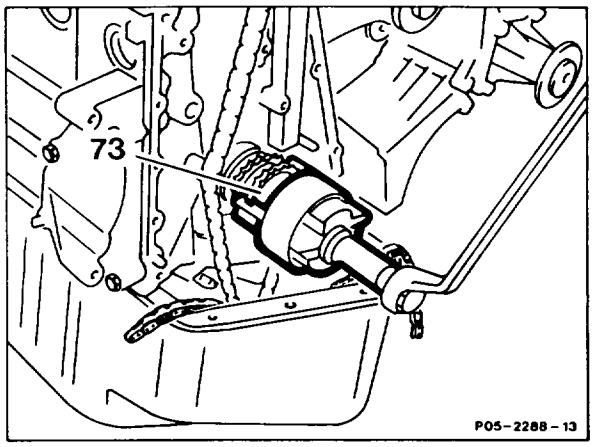

Installation

8 Heat crankshaft gear to approx. 50 °C and fit onto the crankshaft.
Pay attention to the Woodruff keys.

9 Fit timing chain onto the camshaft gear.

Note
Pay attention to coloured marking.

10 Fit oil pump chain onto the crankshaft gear. Insert rivet link into the oil pump chain from behind.

11 Insert cheeks (03) 103 589 01 63 00 into the riveting tool 000 589 58 43 00 as shown in drawing and tighten with the screw (arrow).

Note
The figure 2 is stamped on the side of the cheek (03) 103 589 01 63 00.

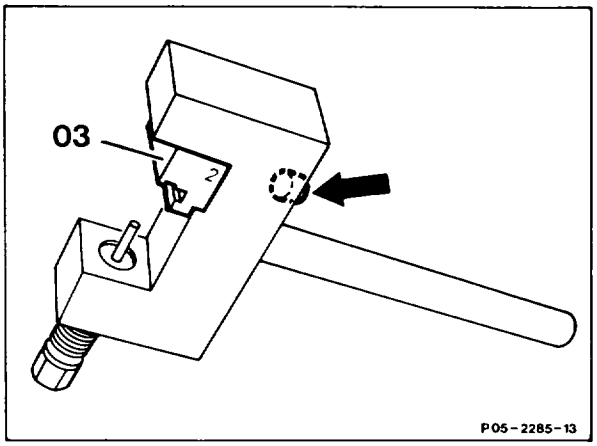

12 Insert moving thrust piece (02) 103 589 01 63 00 with the figure 2 into the riveting tool 000 589 58 43 00 as shown in the drawing.

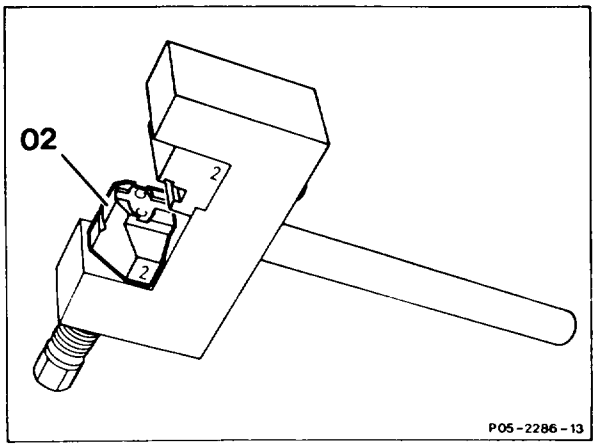

13 Insert plate (arrow) into the moving thrust piece (02) 103 589 01 63 00 (magnetic surface).

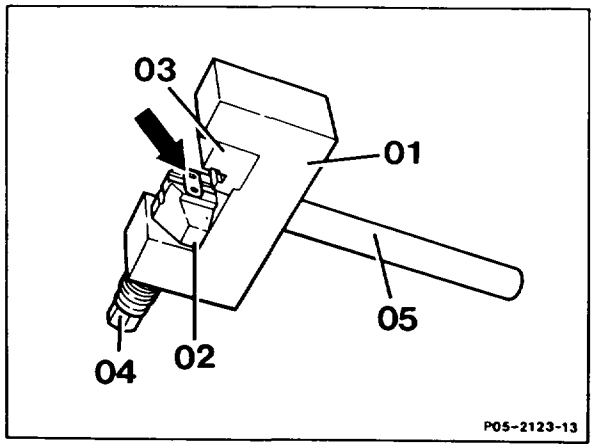

14 Fit web (arrow) onto both rollers on the link.

Note
Rivet heads of rivet link pins must be guided in the slot (C).

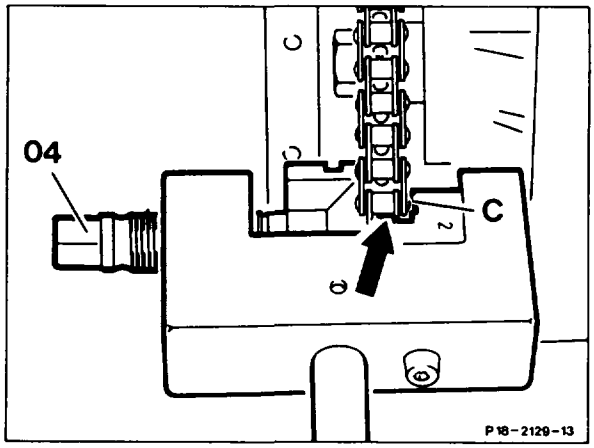

15 Screw in spindle (04) until a firm resistance is felt.

Note
When screwing in, ensure that the pins of the link are inserted into the holes of the plate.

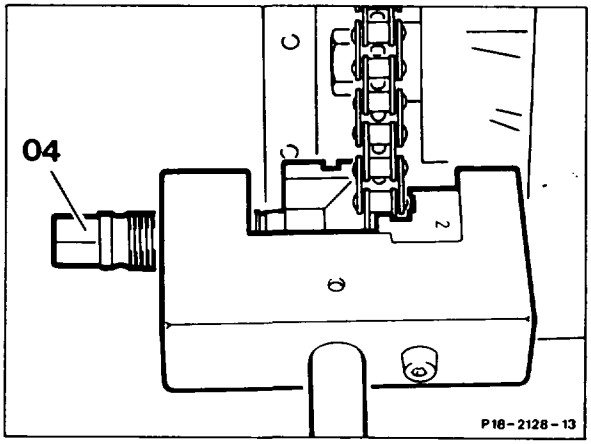

16 Take off riveting tool 000 589 58 43 00 and change over the moving thrust piece (02) 103 589 01 63 00 onto the rivet profile (D).

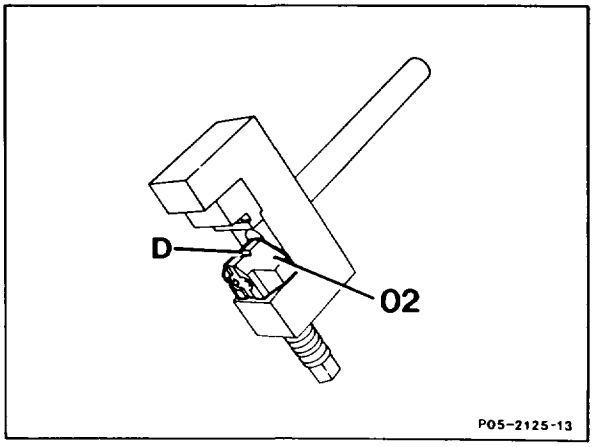

17 Fit on riveting tool 000 589 58 43 00. Rivet pins of the rivet link individually by tightening the spindle (04) to 25 Nm.

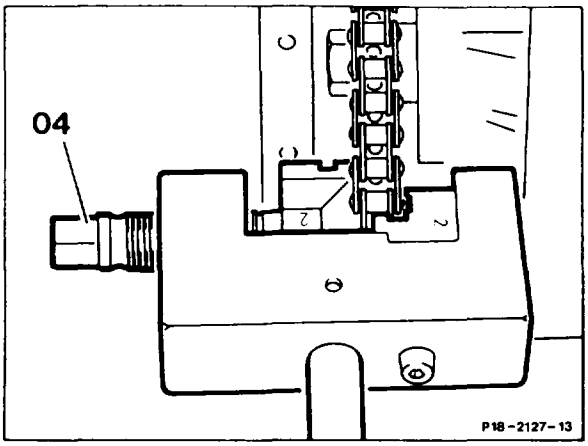

18 Check riveting; re-rivet if necessary.

19 Install spring, bush and tensioning bracket.

20 Install tensioning rail (05–3300).

Installation is performed in the reverse order.

21 Check for leaks with engine running.

Diesel engines

Loosen mounting screw (1) and remove housing with filter element in downward direction.

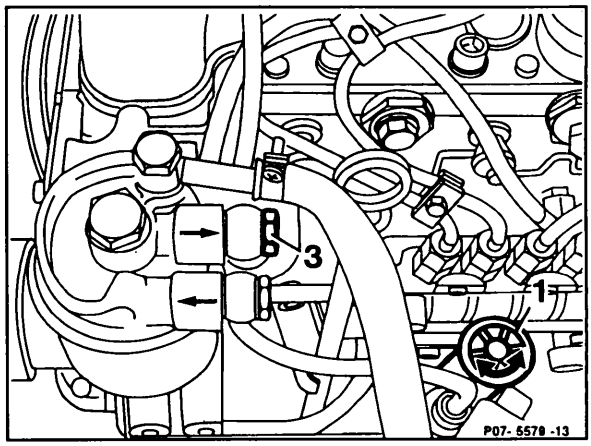

Engine 616, 617

Install new filter element with housing (3) and gasket (4).

Bleeding fuel system

Engines 616, 617

Fuel filter

Loosen hollow bolt (3, upper illustration) and using hand pump, pump manually until fuel flows out free of bubbles. Retighten hollow bolt.

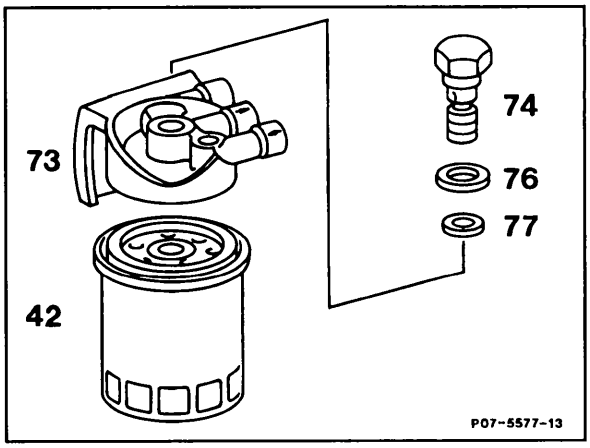

Bleeding injection pump

Pump manually until overflow valve on injection pump opens with an audible buzzing sound.

Engines 601, 602, 603

When starting, injection system will bleed automatically.

Run engine and check for leaks.

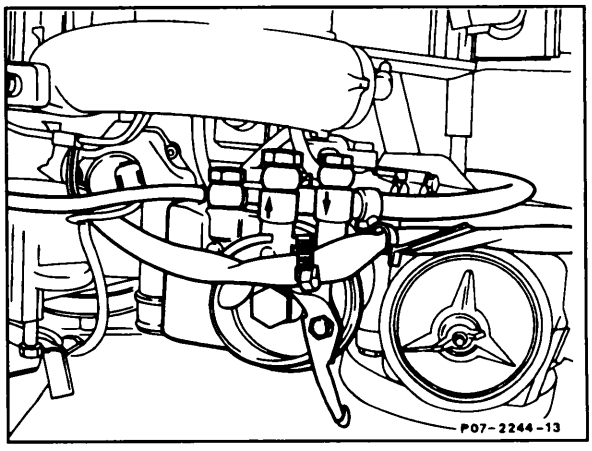

Engine 601, 602, 603

Replacing fuel filter

0780.3

Engine 102 110 116 117
with CIS

Remove protective cover.

Disconnect fuel lines.

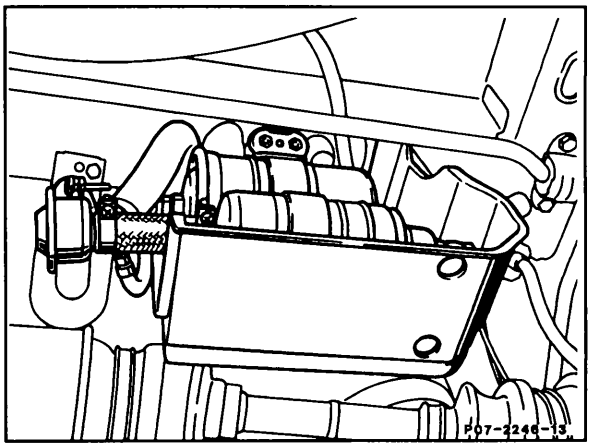

Loosen mounting screws (arrows) and remove filter.

Unscrew fitting from old filter and attach to new filter with new seal ring.

Install new fuel filter in flow direction.with plastic sleeve. Sleeve should project on both sides of the holder since contact corrosion may occur if there is direct contact with the holder. Replace plastic sleeve, if necessary.

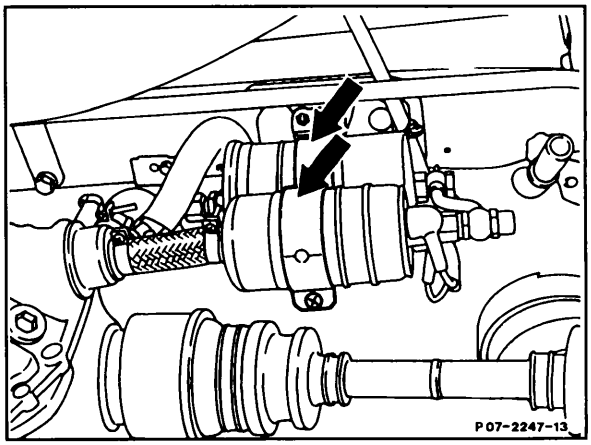

Connect steel line to filter.

Retighten mounting screws.

Check for leaks.

Engine 102 103 104 116 117 119
with CIS-E

Remove protective cover by removing mounting bolts (arrows). On model 201 (2nd version) pull out expanding rivets.

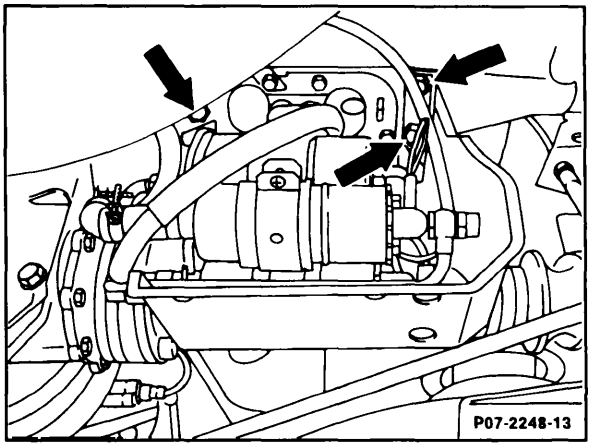

Model 107 , 126

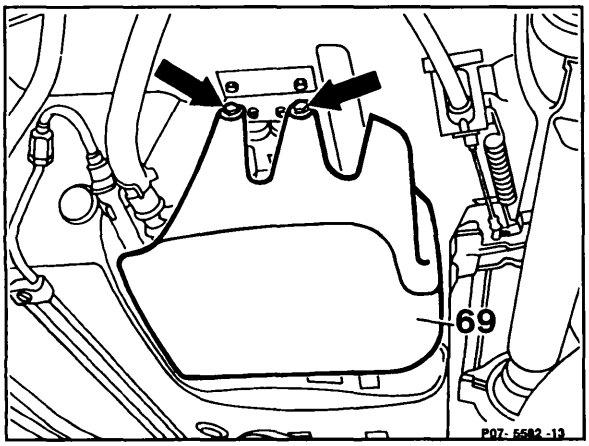

Model 201 1st version

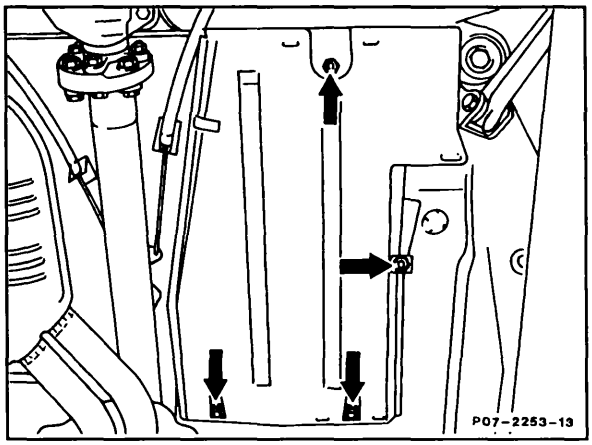

Model 124

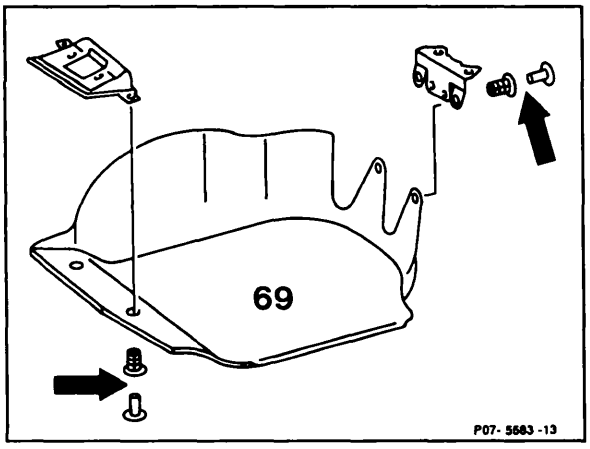

Model 201 2nd version

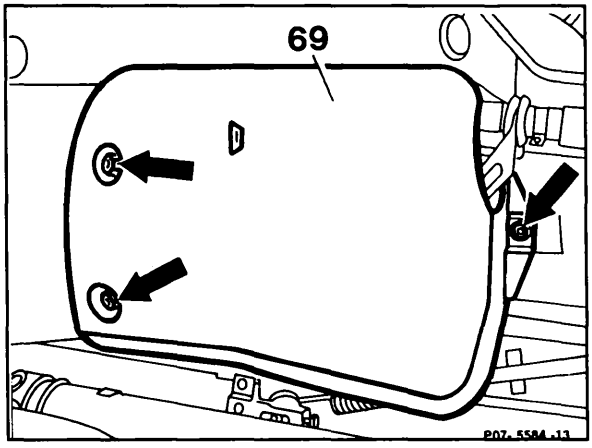

Model 201 (3rd version as of 08.1985)

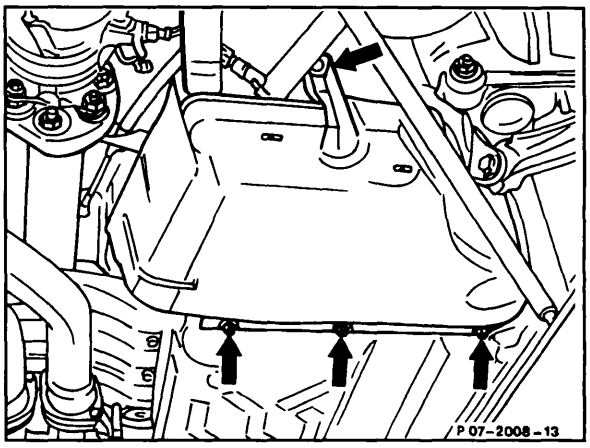

Model 129

Disconnect fuel line and fuel hose.
Loosen mounting screws (arrow) pivot holder down and remove filter.

Install new fuel filter and plastic sleeve in flow direction. Sleeve should project on both sides of the holder since contact corrosion may occur if there is direct contact with the holder. Replace plastic sleeve, if necessary.
On model 124, an additional plastic sleeve is required.
Install protective cover.

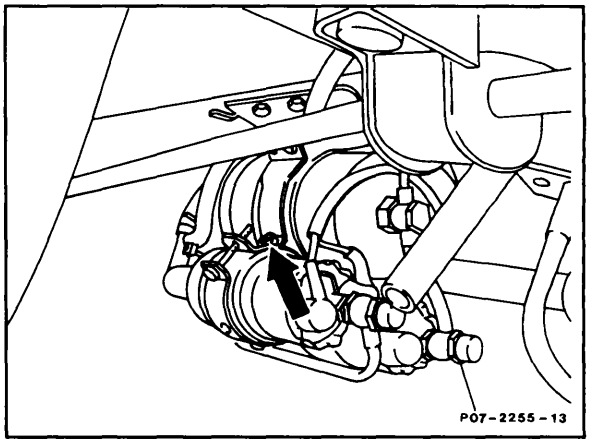

Model 107, 126

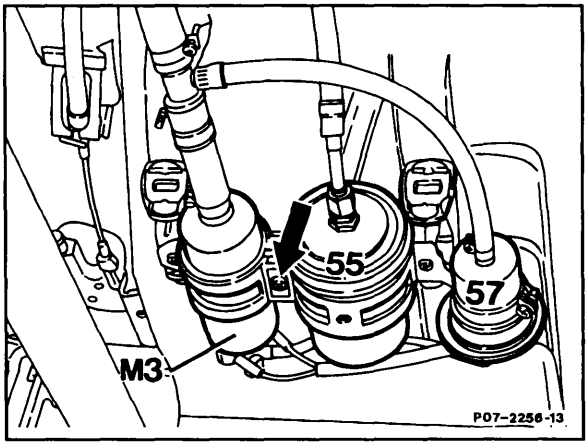

Model 124

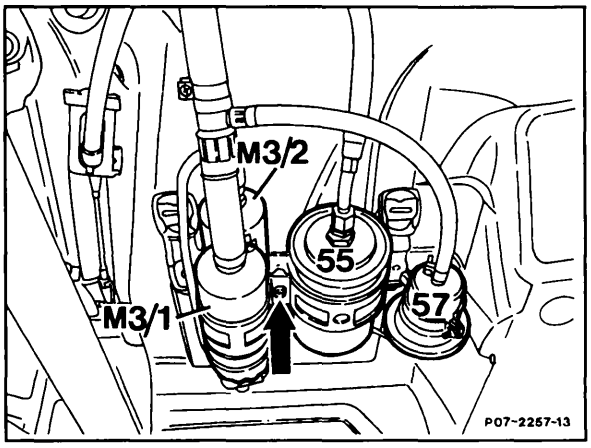

Model 124.026/030/050 as of 11. 1986, and 124.230
Model 129

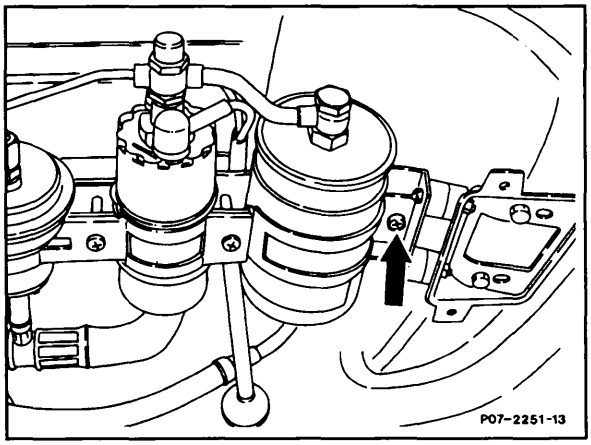

Model 201 1st version

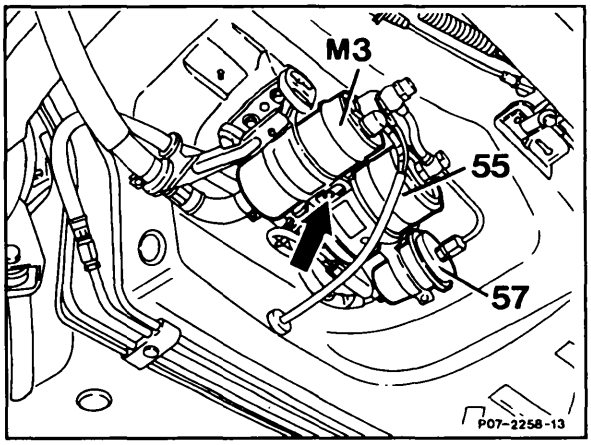

Model 201 2nd version

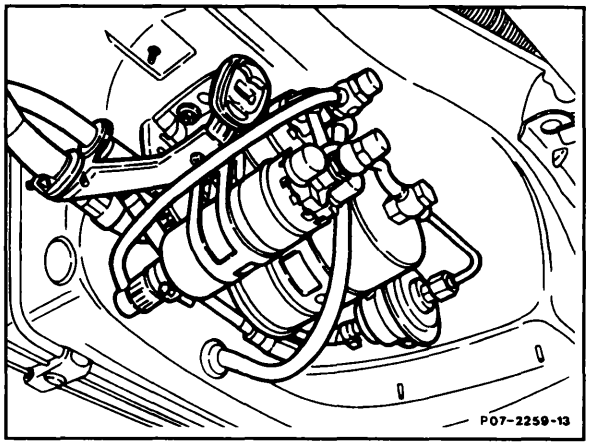

Model 201.029/034 starting 10.1986

Replacing fuel filter

0780.5

Engine 104 119 120
with LH

- Remove protective cover by removing screws (arrows).

- Disconnect fuel lines and fuel hose from fuel filter (55).

- Loosen clamping screw (arrow) and remove fuel filter towards rear.

- Install new fuel filter with plastic sleeve so that sleeve extends on both sides of holder since contact corrosion may occur if there is direct contact with the holder.

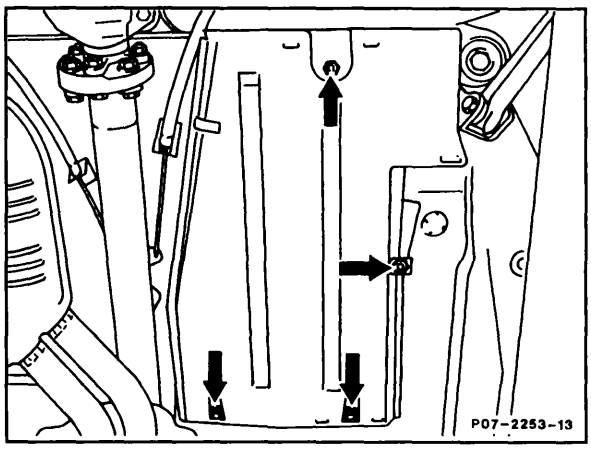

Model 124

- Run engine briefly to check connections for leakage.

- Reinstall protective cover.

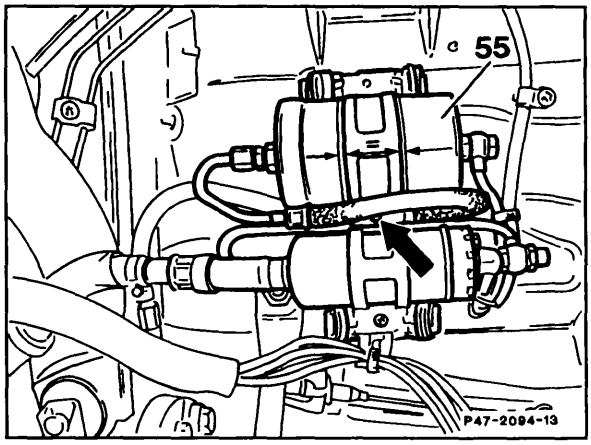

Model 124

Model 140

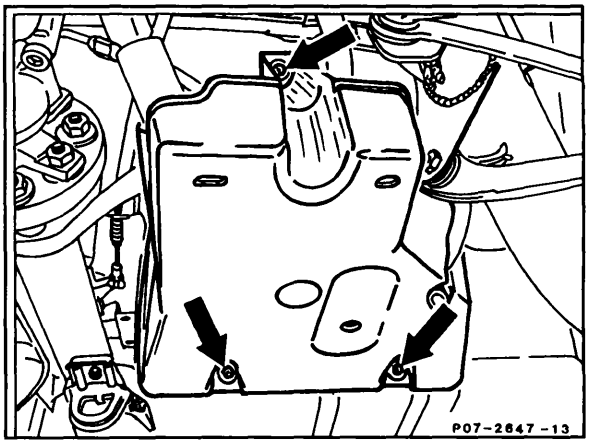

Model 140

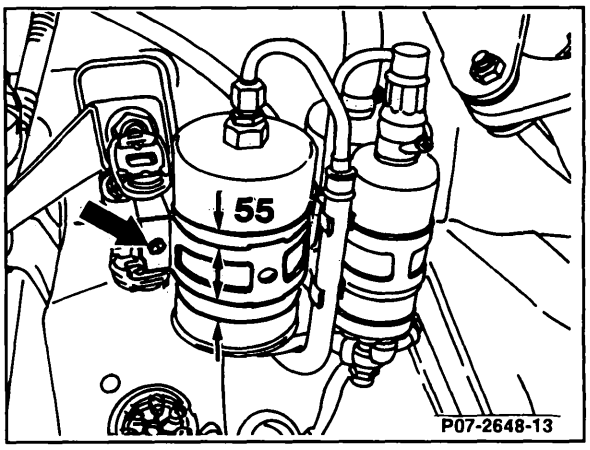

Replacing fuel filter

0780.6

Engine 104
with HFM-SFI

> ⚠ **WARNING!**
> Apply parking brake before performing work with engine running.
> Place automatic transmission selector lever in Park position.

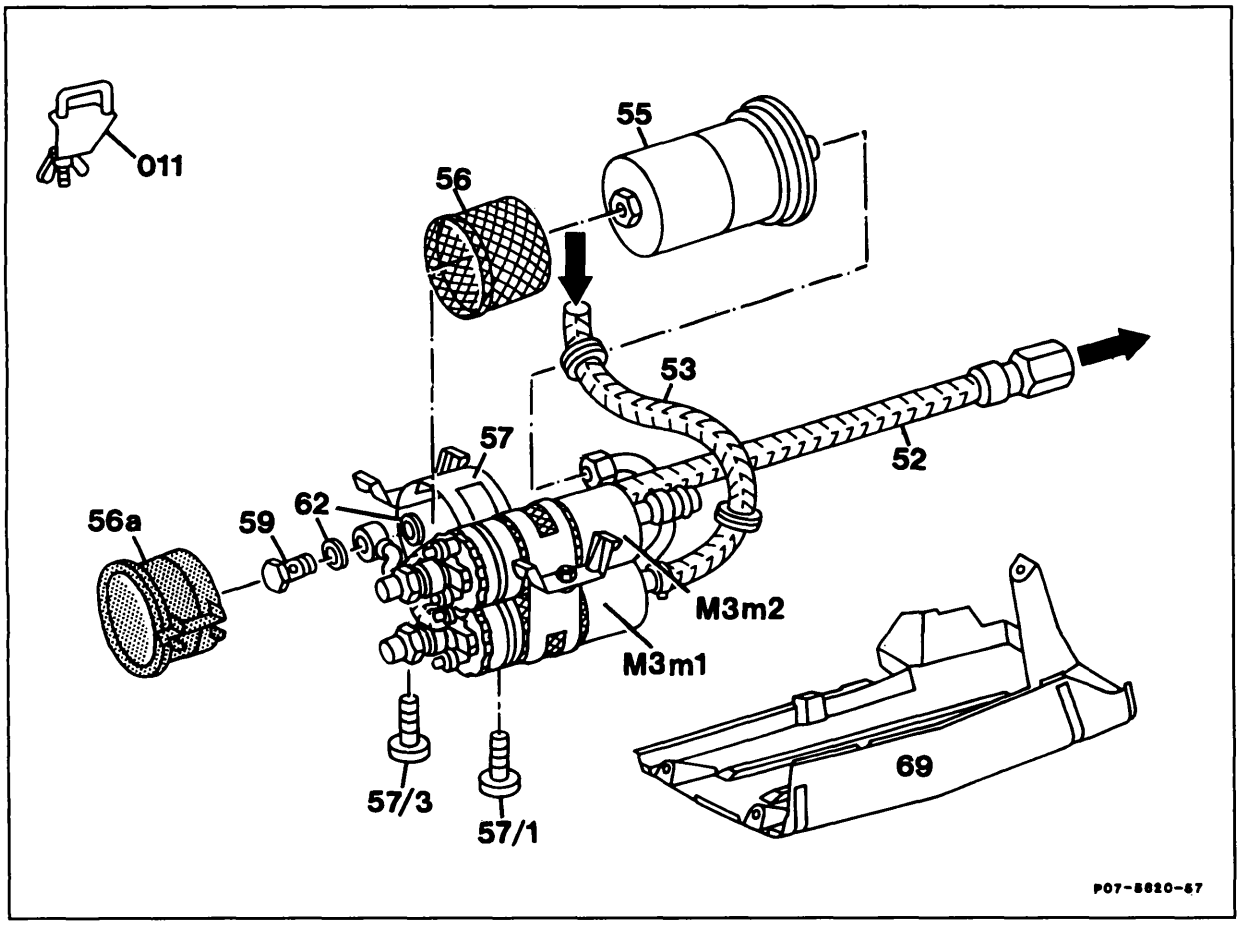

Shown on fuel pump assembly with two fuel pumps.

Special tools

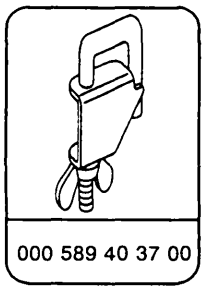

⚠ **WARNING!**
Observe fuel-related safety precautions.

- Release fuel tank pressure by opening filler cap.
- Disconnect battery negative cable and cover battery negative terminal.
- Remove protective cover by removing screws (arrows).
- Disconnect fuel lines and fuel hose from fuel filter (55).

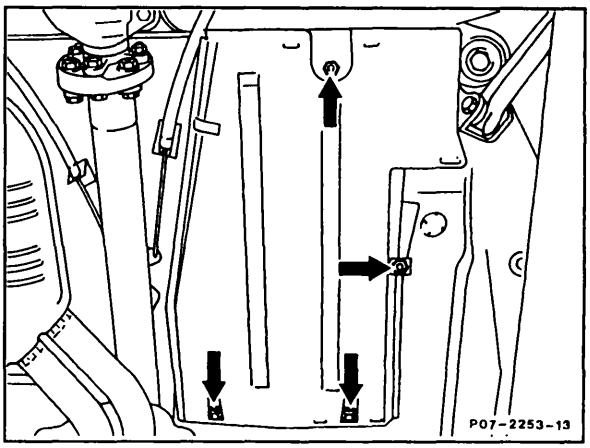

Model 124

- Loosen clamping screw (arrow) and remove fuel filter towards rear.
- Install new fuel filter with plastic sleeve so that sleeve extends on both sides of holder since contact corrosion may occur if there is direct contact with the holder.
- Run engine briefly to check connections for leakage.
- Reinstall protective cover.

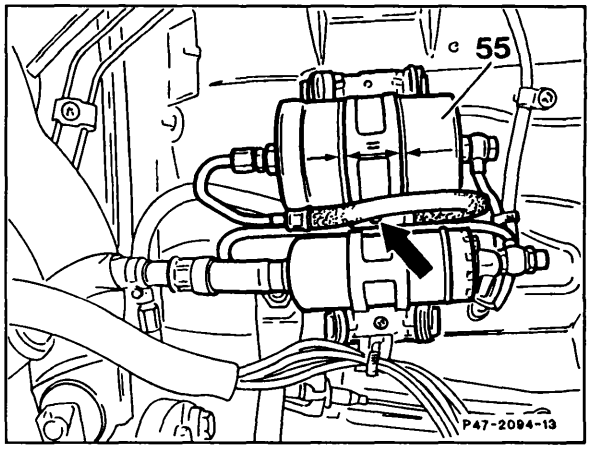

Model 124

Models and components may have different versions, data and operations in the case of their 3- to 6-digit designation (e.g. 126 or 126.024). These differences are identified by the following suffixes:

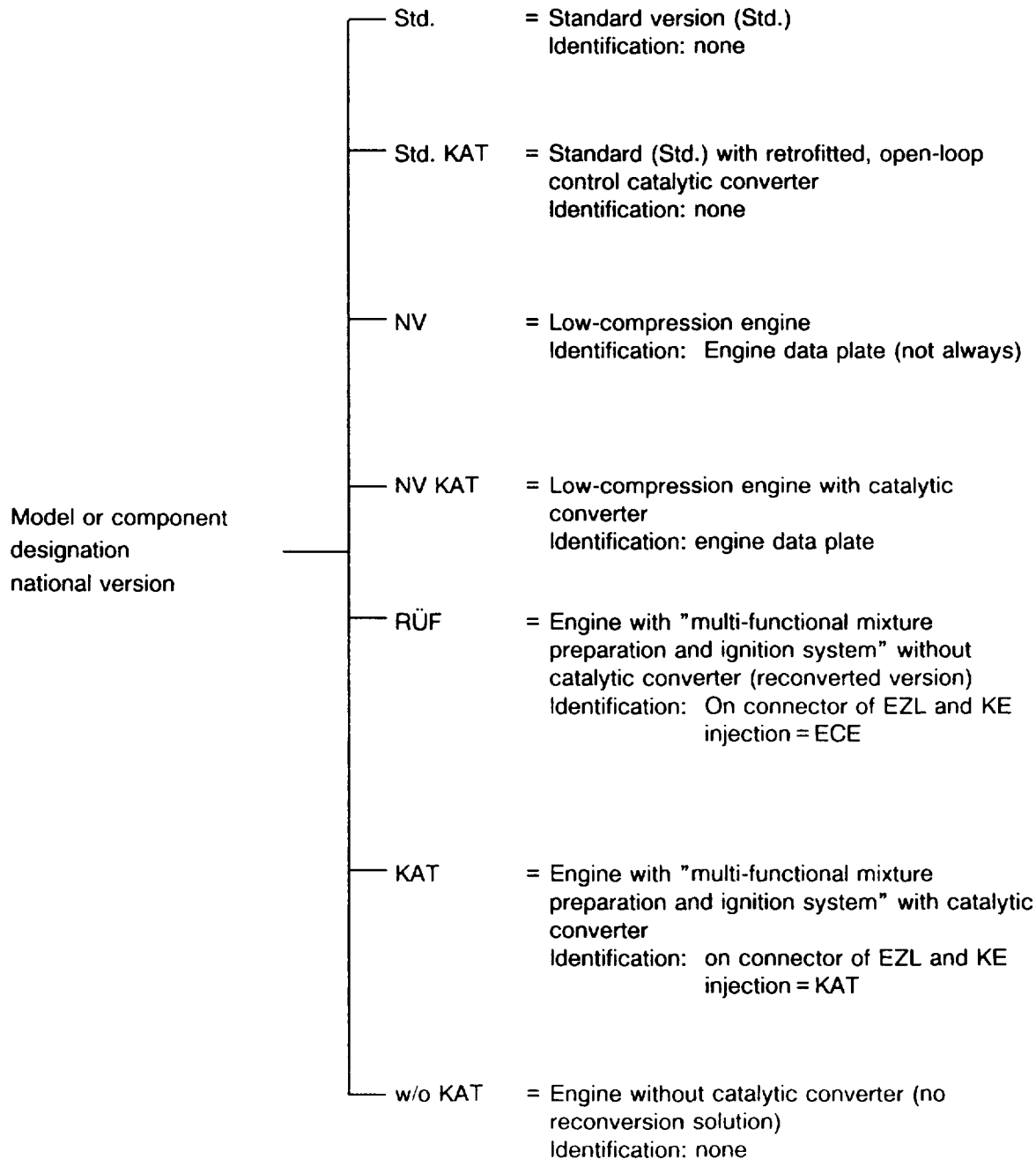

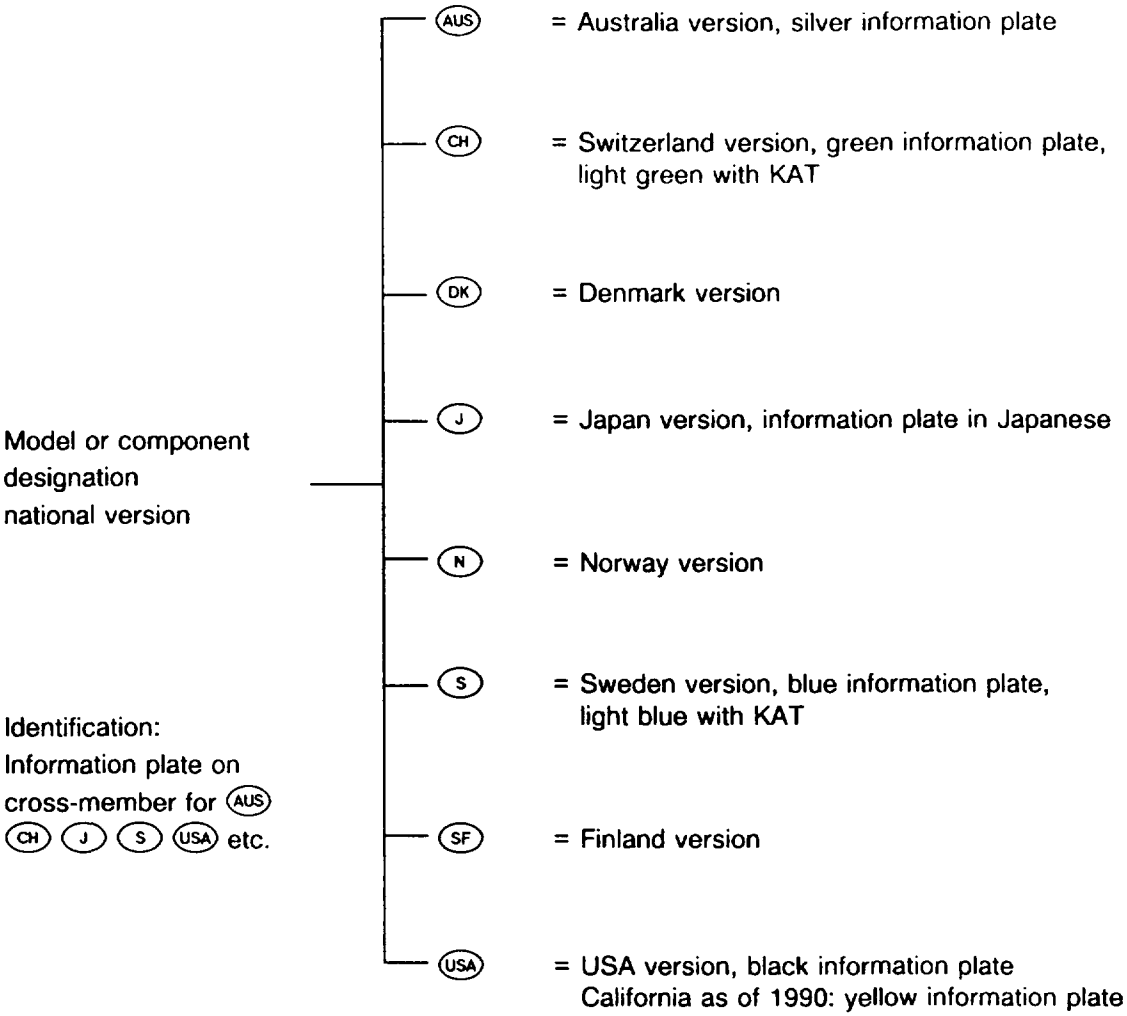

The respective model year is indicated after the nationality symbol of the national versions if necessary for distinguishing.

If no suffixes are indicated with the designation of models and components, the respective data apply to all the models and components listed in each case.

Sales designation	Model	Engine	manufactured from – to
300 SL	107.041	103.982	1985 – 1989
260 E	124.026	103.940	1985 – 1992
260 E LWB special body	124.007	103.940	1986 – 1992
260 E 4MATIC	124.226	103.943	1987 – 1991
300 E Std.	124.030	103.980	1985 – 1986
300 E	124.030	103.983	1985 – 1992
300 E 4MATIC	124.230	103.985	1987 –
300 CE	124.050	103.983	1987 – 1992
300 TE	124.090	103.983	1986 – 1992
300 TE 4MATIC	124.290	103.985	1987 –
260 SE	126.020	103.941	1985 – 1991
300 SE	126.024	103.981	1985 – 1991
300 SEL	126.025	103.981	1985 – 1991
300 SL	129.060	103.984	1989 – 1993
190 E 2.6	201.029	103.942	1984 – 1993

A. Basic and national versions, except (CH) (S) up to 1986 and (AUS) (J) (USA)

Engine	103.94	103.94	103.980	103.98	103.98
Version	RÜF NV (RÜF)	KAT (CH) KAT (S) KAT	Std.	RÜF NV (RÜF)	KAT (CH) KAT (S) KAT
Model	124.007/026 124.226 126.020 201.029	124.007/026 124.226 126.020 201.029	124.030	107.041 124.025/030 124.050/090 124.230/290 126.024/025	107.041 124.025/030 124.050/090 124.230/290 126.024/025 129.060
KE designation	KE III	KE III	KE III	KE III	KE III
Compression ratio ε	9.2 (with NV: 8)	9.2	10.0	9.2 (with NV: 8)	9.2
Ignition system	EZL	EZL	EZL	EZL	EZL
EZL resistance trimming plug (R16)	White inscription "EZL-ECE" 015 545 07 28	Green inscription "EZL-KAT" 015 545 08 28	White inscription "EZL" 013 545 78 28	White inscription "EZL-ECE" 015 545 07 28	Green inscription "EZL-KAT" 015 545 08 28
KE resistance trimming plug (R17)	White inscription "ECE" 014 545 70 28	White inscription "KAT" 014 545 71 28	White inscription "KE-E6" 013 545 95 28	White inscription "ECE" 014 545 70 28	White inscription "KAT" 014 545 71 28
Coolant temperature sensor (B11/2)	two 1-pin connections [1])	two 1-pin connections [1])	two 1-pin connections	two 1-pin connections [1])	two 1-pin connections [1])
Start valve actuation	via fuel pump relay up to +15°C, as of model year 1989 up to +60°C	via fuel pump relay up to +15°C, as of model year 1989 up to +60°C	via fuel pump relay up to +60° C	via fuel pump relay up to +15°C, as of model year 1989 up to +60°C	via fuel pump relay[2]) up to +15°C, as of model year 1989 up to +60°C

See next page for footnotes.

Engine	103.94	103.94	103.980	103.98	103.98
Version	RÜF NV (RÜF)	KAT (CH) KAT (S) KAT	Std.	RÜF NV (RÜF)	KAT (CH) KAT (S) KAT
Model	124.007/026 124.226 126.020 201.029	124.007/026 124.226 126.020 201.029	124.030	107.041 124.025/030 124.050/090 124.230/290 126.024/025	107.041 124.025/030 124.050/090 124.230/290 126.024/025 129.060
Idle speed device	Electronic idle speed control with road speed signal [3]	Electronic idle speed control with road speed signal [3]	Electronic idle speed control	Electronic idle speed control with road speed signal [3]	Electronic idle speed control with road speed signal [3]
Idle speed air valve	2-pin connection	2-pin connection	2-pin connection	2-pin connection	2-pin connection
Fault recognition [4]	Fault diagnosis via on/off ratio	Fault diagnosis via on/off ratio	–	Fault diagnosis via on/off ratio	Fault diagnosis via on/off ratio [5]
Exhaust gas recirculation	–	–	–	–	only engine 103.984 and (J) (USA)

[1] As of approx. 09/89 4-pin.
[2] On model 129.060 start valve actuation via engine systems control unit MAS.
[3] As of approx. 03/87.
[4] As of approx. 03/86.
[5] For model 129.060 a fault memory is integrated in the engine systems control unit MAS.

B. National versions (CH) (S) up to 1986 and (AUS) (J) (USA)

(CH) (S) up to 1986

Engine	103.980
Version	(CH) (S)
Model	124.030
KE designation	KE III
Compression ratio ε	10.0
Ignition system	EZL
EZL resistance trimming plug (R16)	White inscription "EZL" 013 545 78 28
KE resistance trimming plug (R17)	White inscription "KE-E6" 013 545 95 28
Coolant temperature sensor (B11/2)	two 1-pin connections
Start valve actuation	via fuel pump relay up to +60°C
Idle speed device	Electronic idle speed control
Idle speed air valve	2-pin connection
Exhaust gas recirculation	Exhaust gas recirculation (ARF) valve with one connection

(AUS) (J) (USA)

Engine	103.940/942 103.981/983	103.940/942 103.981/983/985	103.940/942 103.981/983/985
Version	KAT (AUS)	KAT (J)	KAT (USA)
Model	124.026/030/050 124.090 126.024/025 201.029	124.007/026/030 124.050/090/230 124.290 126.024/025 201.029	124.026/030/050 124.090/230/290 126.024/025 201.029
KE designation	KE III	KE III	KE III [4]
Compression ratio ε	9.2	9.2	9.2
Ignition system	EZL	EZL	EZL
EZL resistance trimming plug (R16/1)	Reference resistor 220 Ω	Reference resistor 750 Ω	Reference resistor 750 Ω
KE resistance trimming plug (R17/1)	2-pin connector with bridge incorporated in cable harness (< 1 Ω)	2-pin connector with bridge incorporated in cable harness (< 1 Ω)	2-pin connector with bridge incorporated in cable harness (< 1 Ω)
Coolant temperature sensor (B11/2)	two 1-pin connections [1]	two 1-pin connections [1]	two 1-pin connections [1]
Start valve actuation	via fuel pump relay up to + 15°C as of model year 1989 up to + 60°C	via fuel pump relay up to + 15°C [2] as of model year 1989 up to + 60°C	via fuel pump relay up to + 15°C [2] as of model year 1989 up to + 60°C
Idle speed device	Electronic idle speed control with road speed signal	Electronic idle speed control with road speed signal	Electronic idle speed control with road speed signal
Idle speed air valve	2-pin connection	2-pin connection	2-pin connection
Fault recognition	Fault diagnosis via on/off ratio	Fault diagnosis via on/off ratio [3]	Fault diagnosis via on/off ratio [3]
Exhaust gas recirculation	–	x	x

1) As of approx. 09/89 4-pin.

2) (J) (USA) as of model year 1990: via engine systems control unit MAS.

3) (J) (USA) as of model year 1990 with fault diagnosis, (USA) California as of model year 1988 fault memory by on-board diagnosis.

4) As of model year 1989 KE V.

A. Basic and national versions
Engine 103.980 Standard

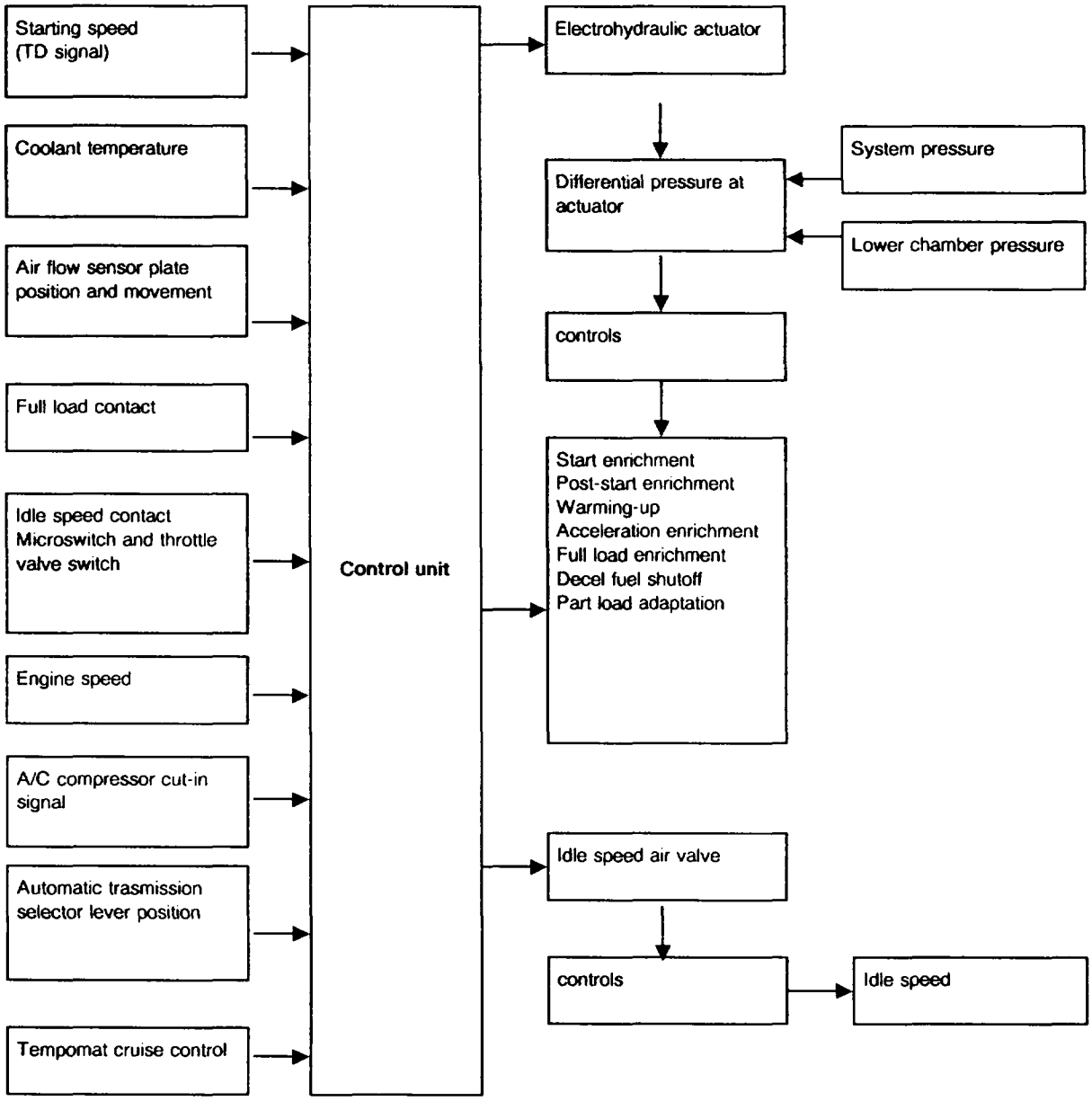

Engine 103 KAT/RÜF (except engine 103.984)

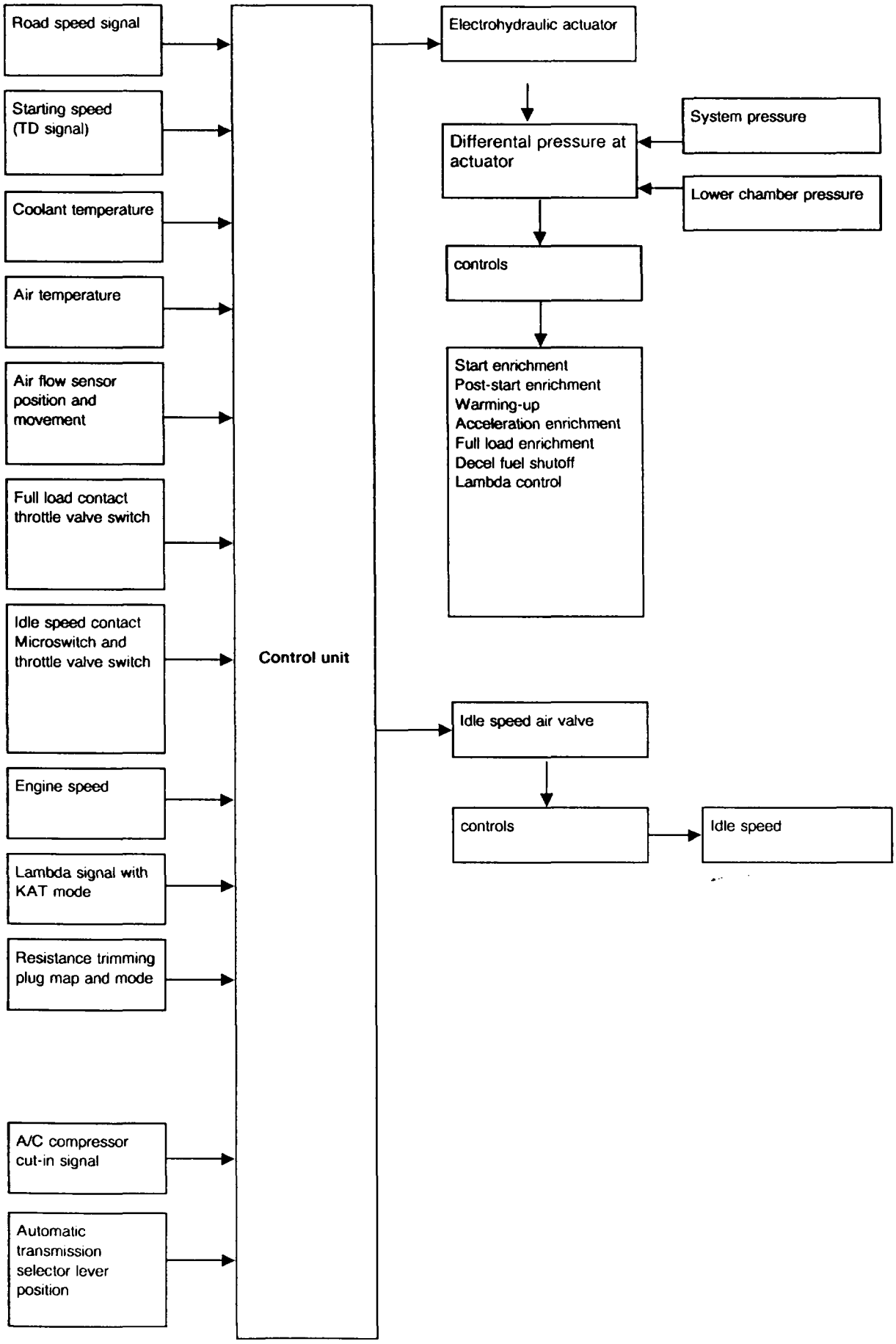

Engine 103.984

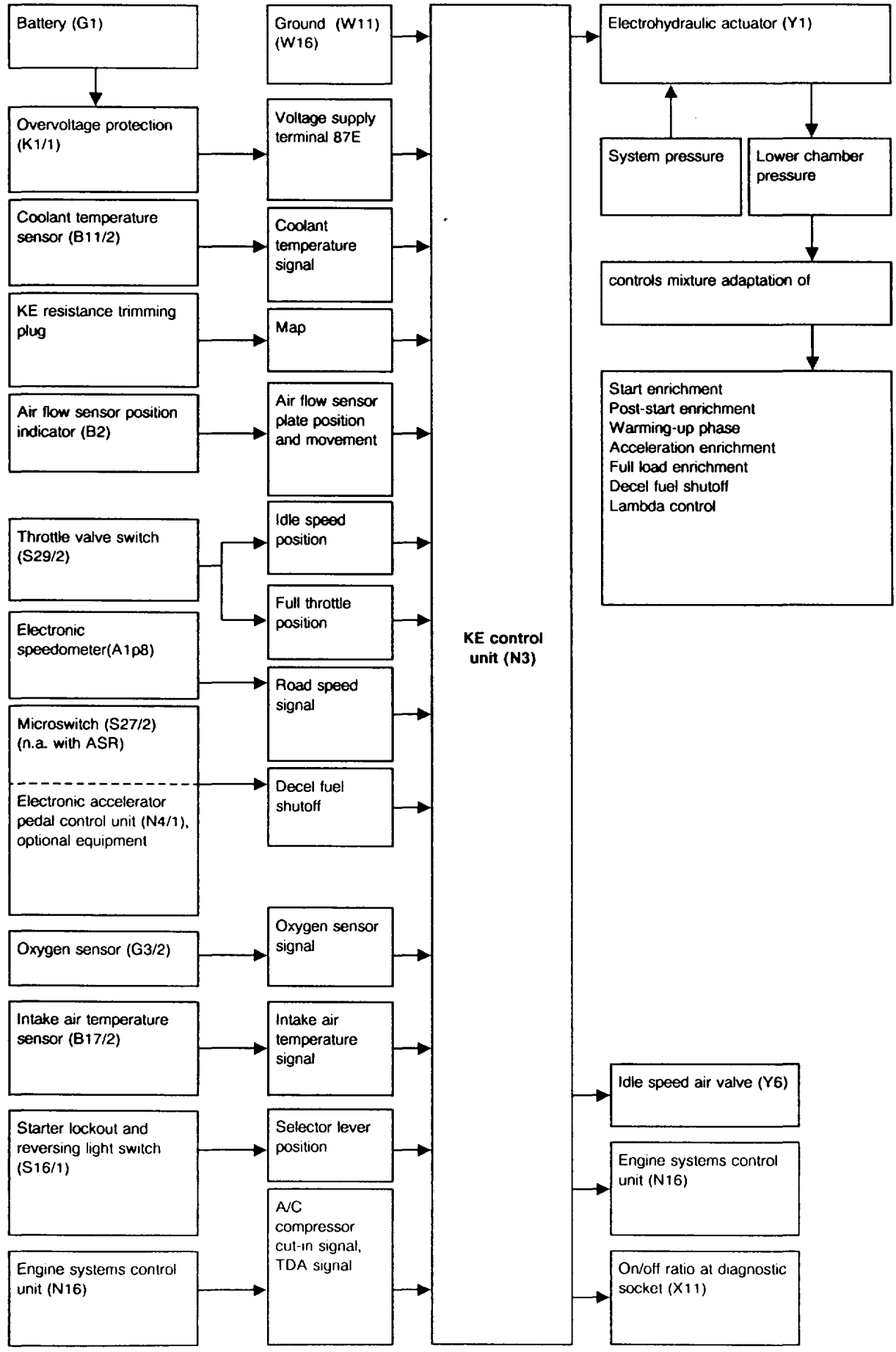

B. National version (AUS) (J) (USA)

Engine 103, model year 1986/87

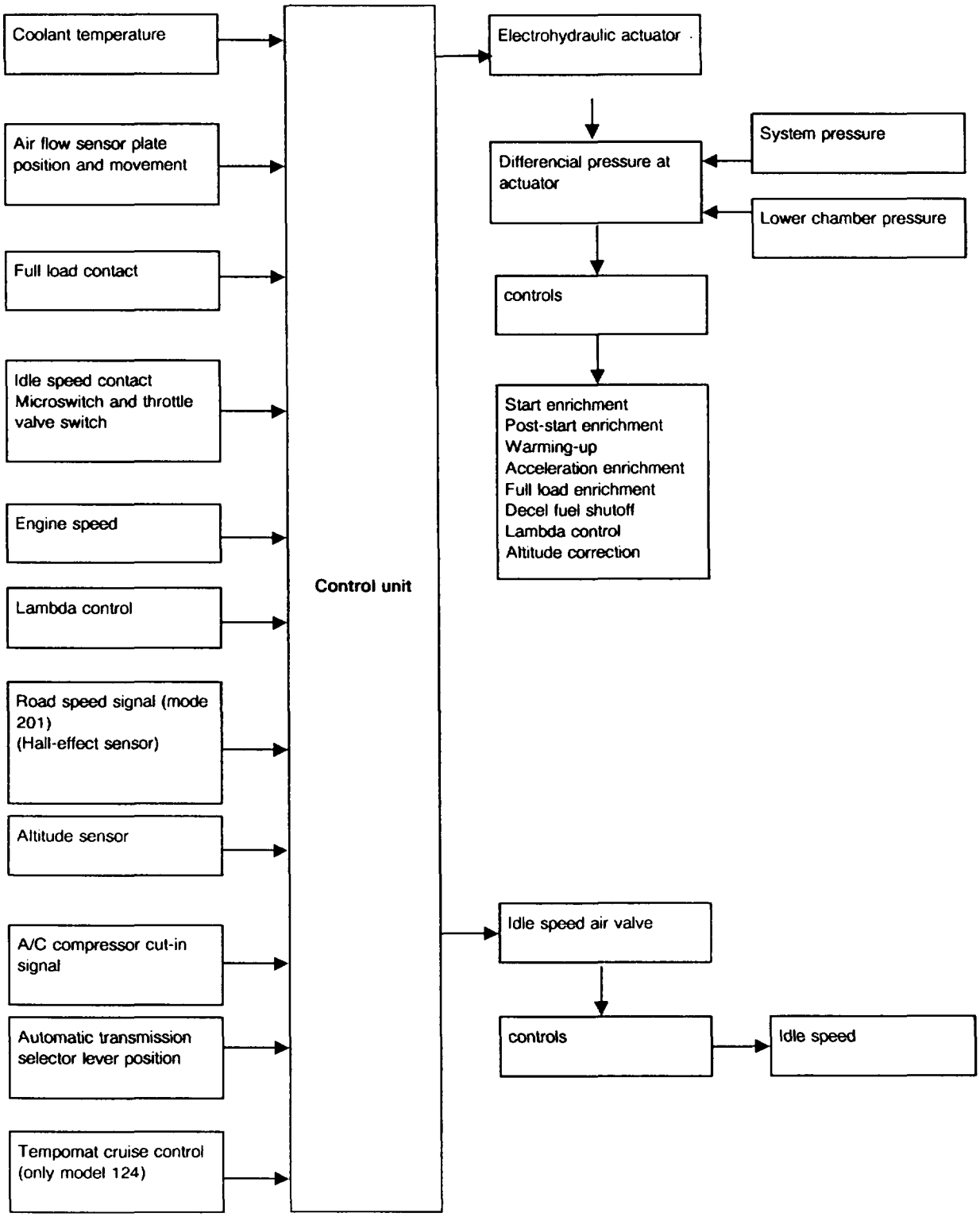

Engine 103, model year 1988/89

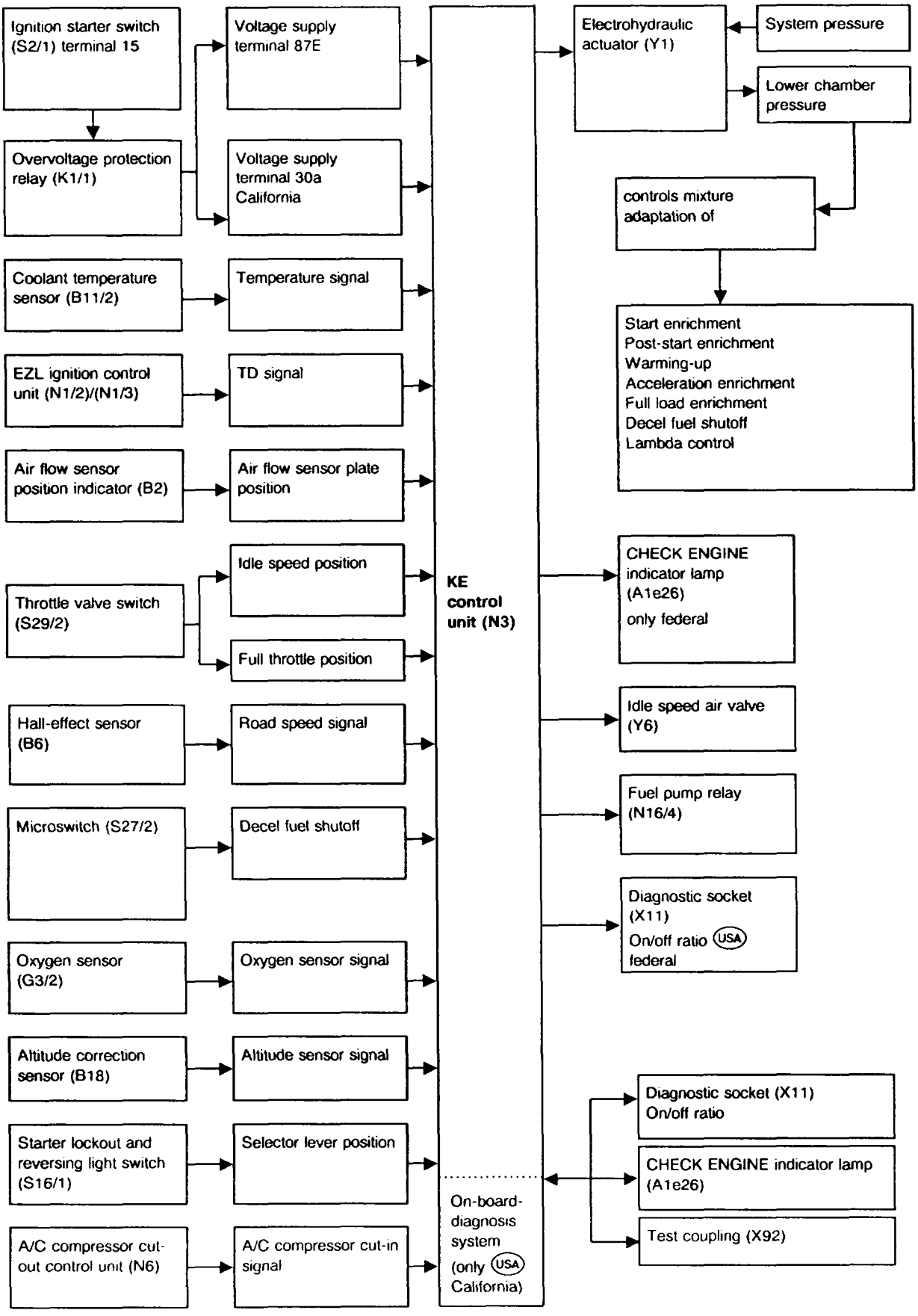

A. Basic and national versions engine 103.94/98 with KAT except 103.984

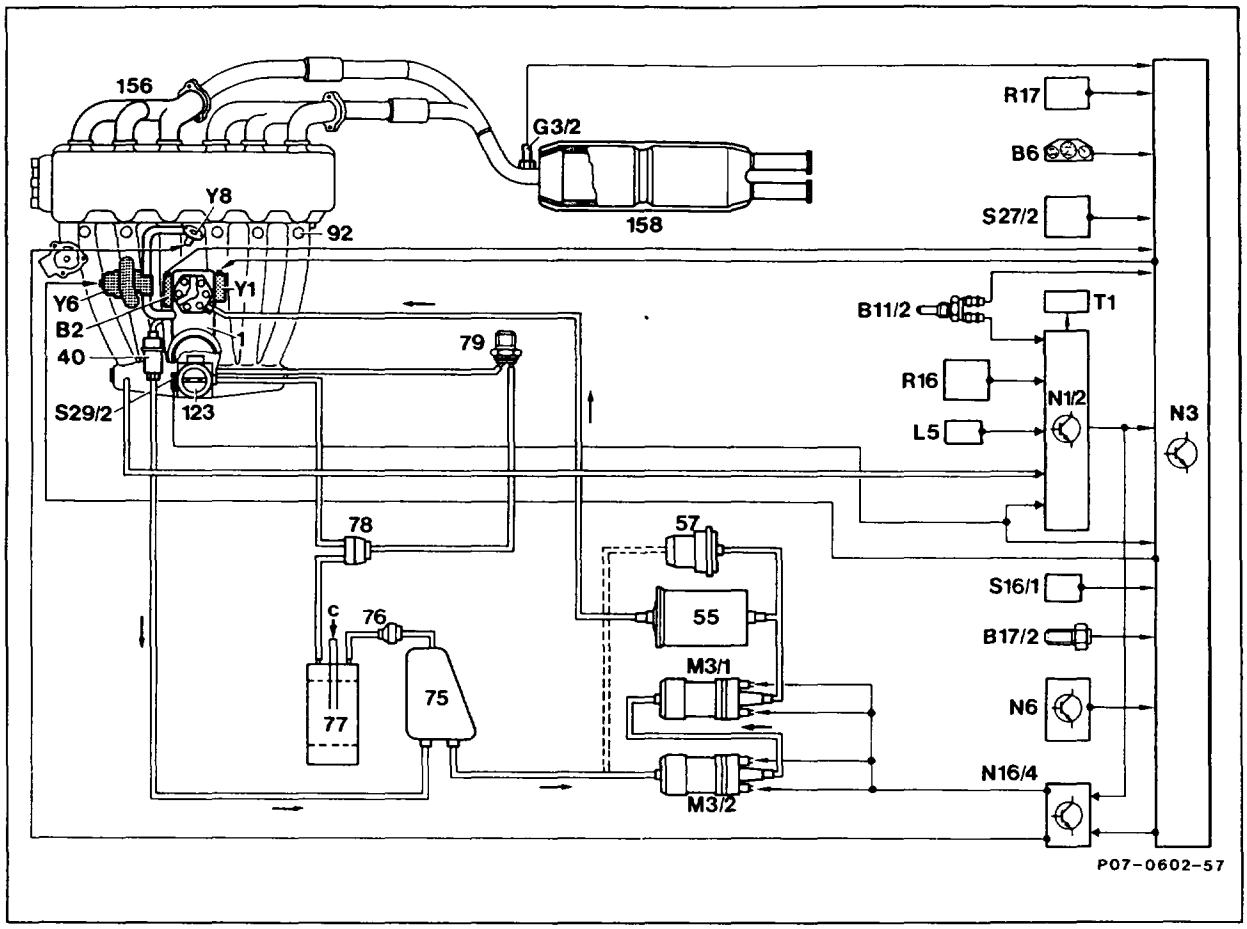

1	Mixture control unit
40	Diaphragm pressure regulator
55	Fuel filter
57	Fuel accumulator
75	Fuel tank
75a	Model 124 Station Wagon: rear line directly in fuel tank
76	Vent valve
77	Activated charcoal filter
78	Regeneration valve
79	70°C thermovalve
92	Injection valve
123	Throttle valve body
156	Exhaust manifold
158	Underflow catalytic converter
B2	Air flow sensor position indicator
B6	Hall-effect road speed sensor
B11/2	Coolant temperature sensor (EZL/KE)
B17/2	KE intake air temperature sensor
G3/2	Heated oxygen sensor
L5	Crankshaft position sensor
M3m1	Fuel pump 1
M3m2	Fuel pump 2
N1/2	EZL ignition control unit
N3	KE control unit
N6	A/C compressor cutoff control unit
N16/4	Fuel pump relay with cold start valve actuation, kickdown and engine speed limiter
R16	EZL resistance trimming plug
R17	KE resistance trimming plug
S16/1	Starter lockout and reversing light switch
S27/2	Decel fuel shutoff microswitch
S29/2	Throttle valve switch, full load/idle speed recognition
T1	Ignition coil
Y1	Electrohydraulic actuator
Y6	Idle speed air valve
Y8	Start valve
c	Air admission

Note

Oxygen sensor (G3/2) and catalytic converter (158) not fitted to vehicles without KAT.

Engine 103.984 with KAT, model 129

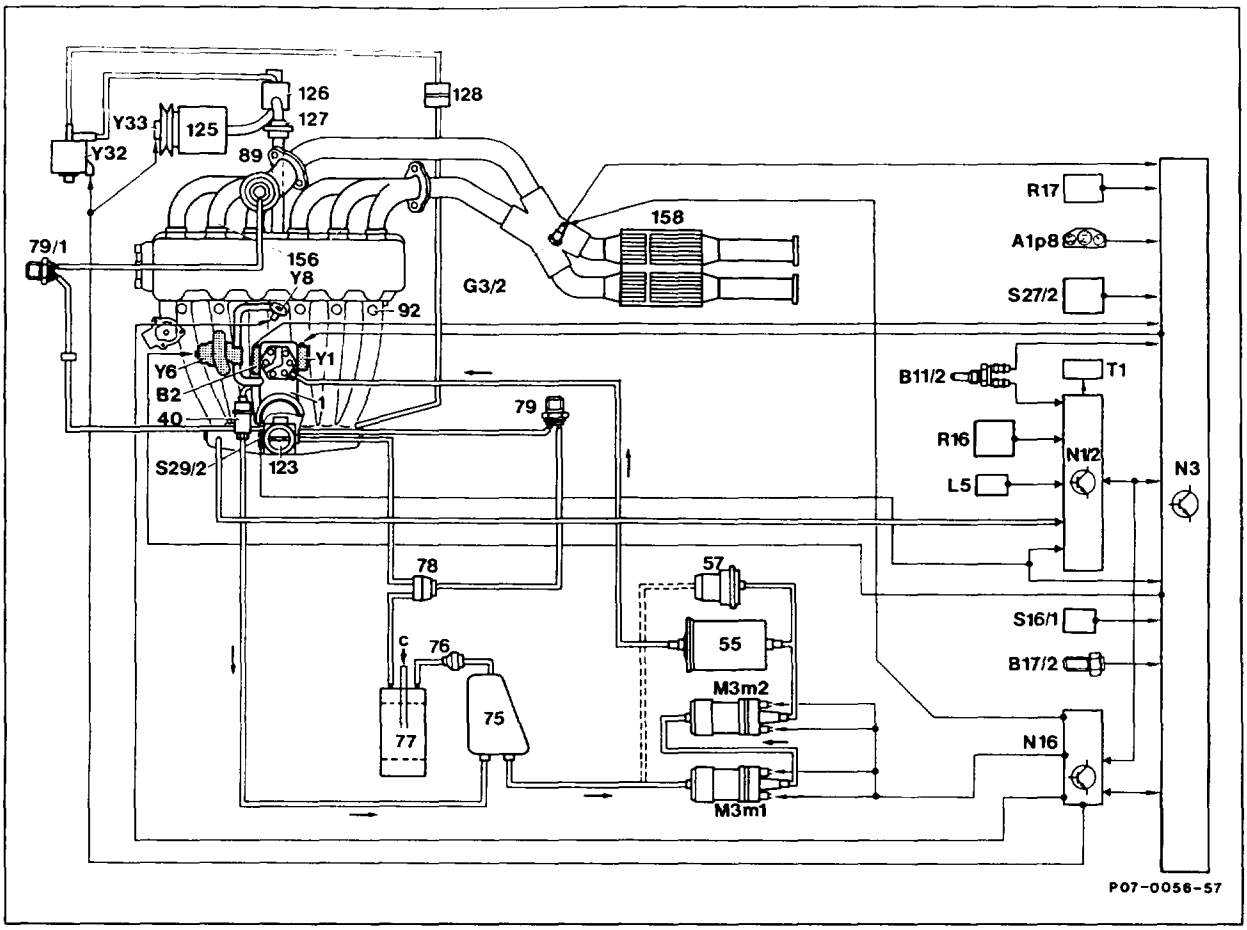

1	Mixture control unit
40	Diaphragm pressure regulator
55	Fuel filter
57	Fuel accumulator
75	Fuel tank
76	Vent valve
77	Activated charcoal filter
78	Regeneration valve
79	70/60°C thermovalve
79/1	70/35°C thermovalve
92	Injection valve
123	Throttle valve body
125	Air pump
126	Air shutoff valve
127	Non-return valve (injected air)
128	Non-return valve (vacuum)
156	Exhaust manifold
158	Catalytic converter
A1p8	Electronic speedometer
B2	Air flow sensor position indicator
B11/2	Coolant temperature sensor (EZL/KE/2 E-E)
B17/2	KE injection system intake air temperature sensor
G3/2	Heated oxygen sensor
L5	Crankshaft position sensor
M3m1	Fuel pump 1
M3m2	Fuel pump 2
N1/2	EZL ignition control unit
N3	KE control unit
N16	Engine systems control unit (MAS)
R16	EZL resistance trimming plug
R17	KE injection system resistance trimming plug
S16/1	Starter lockout and reversing light switch
S27/2	Decel fuel shutoff microswitch
S29/2	Throttle valve switch, full load/idle speed recognition
T1	Ignition coil
Y1	Electrohydraulic actuator
Y6	Idle speed air valve
Y8	Start valve
Y32	Air pump switchover valve
Y33	Air pump electromagnetic clutch
c	Air admission

Note

Items G3/2, Y32, Y33, 125, 126, 127, 128, 158 not fitted to vehicles without KAT.

B. National version (AUS), (J), (USA) engine 103, model year 1986/87

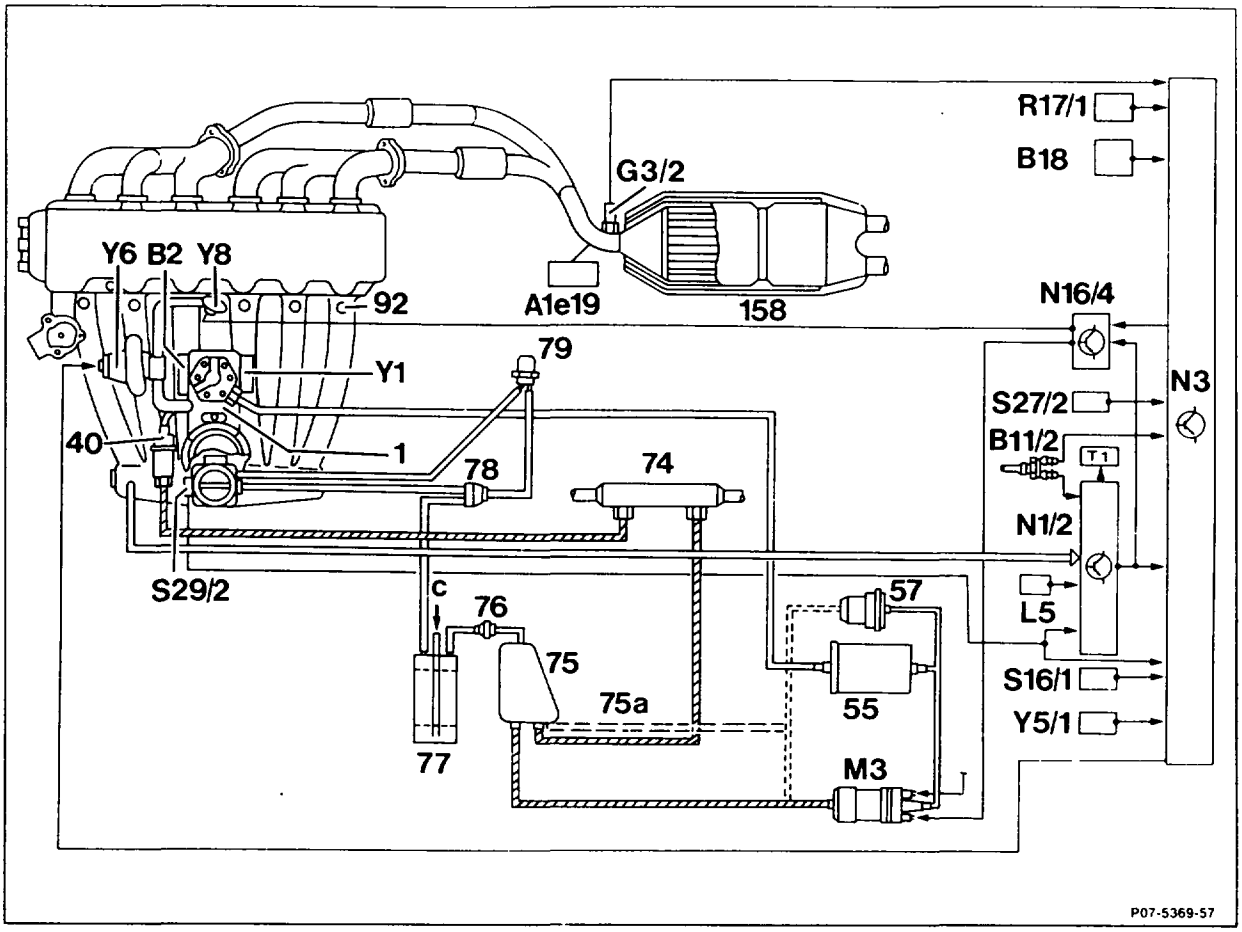

1	Mixture control unit
40	Diaphragm pressure regulator
55	Fuel filter
57	Fuel accumulator
74	Fuel cooler
75	Fuel tank
75a	Model 124 Station Wagon: rear line directly in fuel tank
76	Vent valve
77	Activated charcoal filter
78	Regeneration valve
79	70°C thermovalve
92	Injection valve
158	Underflow catalytic converter
A1e19	Catalytic converter overheating warning lamp (J)
B2	Air flow sensor position indicator
B11/2	Coolant temperature sensor (EZL/KE)
B18	Altitude sensor
G3/2	Heated oxygen sensor
L5	Crankshaft position sensor
M3	Fuel pump
N1/2	EZL ignition control unit
N3	KE control unit
N6	A/C compressor cutoff control unit
N16/4	Fuel pump relay with cold start valve actuation, kickdown and engine speed limiter
R17/1	KE reference resistor
S16/1	Starter lockout and reversing light switch
S27/2	Decel fuel shutoff microswitch
S29/2	Throttle valve switch, full load/idle speed recognition
T1	Ignition coil
Y1	Electrohydraulic actuator
Y5/1	A/C compressor electromagnetic clutch
Y6	Idle speed air valve
Y8	Start valve
c	Air admission

Engine 103, model year 1988/89

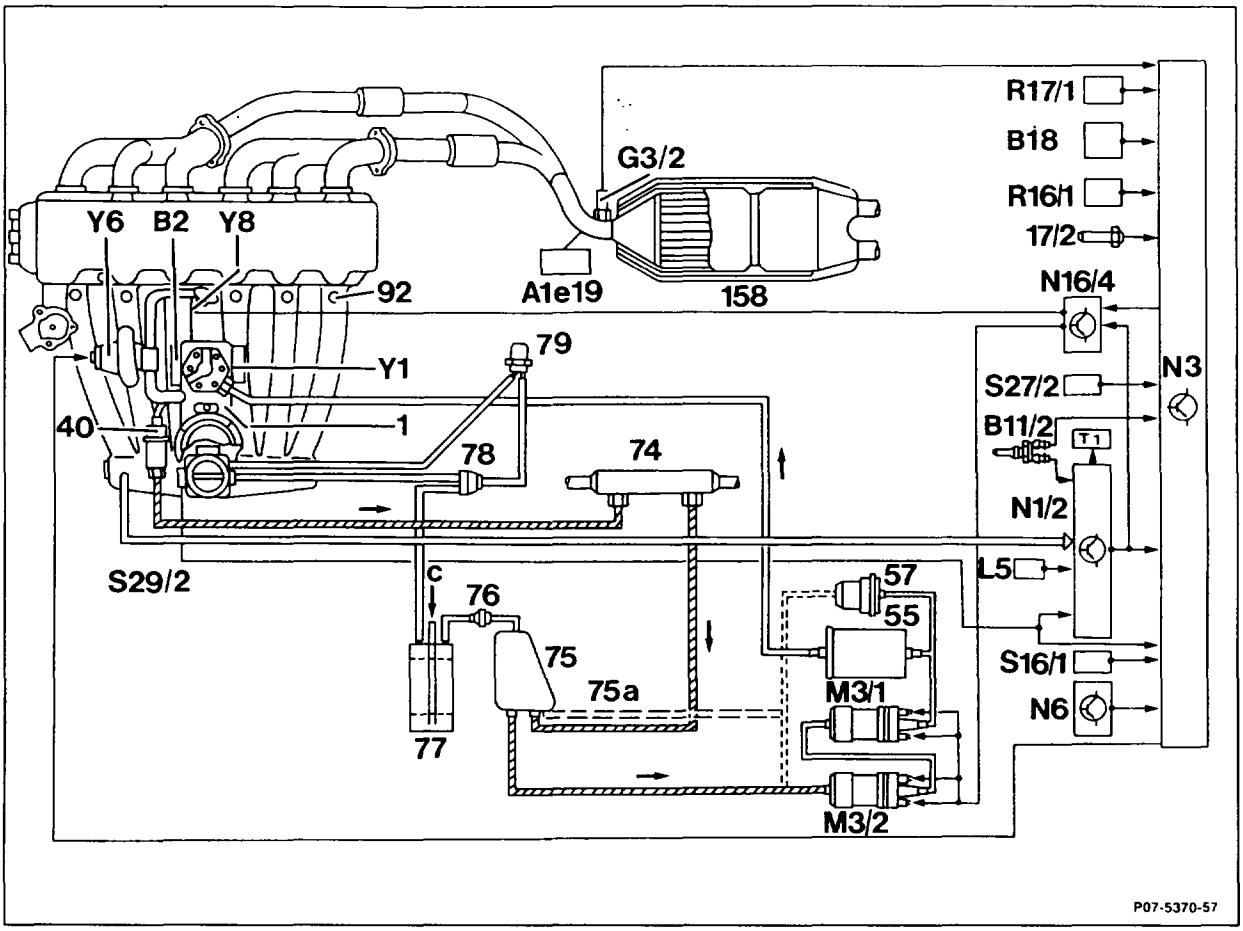

1	Mixture control unit
40	Diaphragm pressure regulator
55	Fuel filter
57	Fuel accumulator
74	Fuel cooler
75	Fuel tank
75a	Model 124 Station Wagon: rear line directly in fuel tank
76	Vent valve
77	Activated charcoal filter
78	Regeneration valve
79	70°C thermovalve
92	Injection valve
158	Underflow catalytic converter
A1e10	Oxygen sensor warning lamp (USA)
A1e19	Catalytic converter overheating warning lamp (J)
B2	Air flow sensor position indicator
B6	Hall-effect road speed sensor
B11/2	Coolant temperature sensor (EZL/KE)
B17/2	Intake air temperature sensor
B18	Altitude sensor
G3/2	Heated oxygen sensor
L5	Crankshaft position indicator
M3m1	Fuel pump 1
M3m2	Fuel pump 2
N1/2	EZL ignition control unit
N3	KE control unit
N6	A/C compressor cutoff control unit
N16/4	Fuel pump relay with cold start valve actuation, kickdown and engine speed limiter
R17/1	KE reference resistor
S16/1	Starter lockout and reversing light switch
S27/2	Decel fuel shutoff microswitch
S29/2	Throttle valve switch, full load/idle speed recognition
T1	Ignition coil
Y1	Electrohydraulic actuator
Y6	Idle speed air valve
Y8	Start valve
c	Air admission

07.3–0121 Testing electrical components of the KE injection system

Preceding work:
Testing, adjusting engine (07.3–1100).

Operation no. of operation texts and work units or standard texts and flat rates:

The individual test steps (e.g. coolant temperature sensor, intake air temperature sensor, etc.) are combined in a test program. If a fault is found when performing engine diagnosis which indicates an individual test step, do not perform the complete test program but only the individual test step with the related time allowance.

Individual test steps:

07–1613	Coolant temperature sensor
07–1614	Intake air temperature sensor
07–1615	Transmission shiftpoint retard
07–1618	Protective cut-out
07–1622	Throttle valve switch
07–1623	Part load mixture adaptation
07–1625	KE control unit
07–1626	TD/TN signal
07–1627	Overvoltage protection
07–1631	Acceleration enrichment
07–1633	Air flow sensor potentiometer
07–1634	Electrohydraulic actuator
07–1635	Road speed signal
07–1652	KE resistance trimming plug
07–5206	Oxygen sensor

A. Basic and national versions Standard, KAT, (CH) KAT, (S) KAT, without KAT, RÜF (AUS) (CH) (S) (except (J) (USA))

		Coordinates
a.	Location of components	D 1
b.	Electrical test data KE injection system (current at actuator mA)	D 2
c.	Without fault diagnosis by means of on/off ratio	E 2
d.	With fault diagnosis by means of on/off ratio	G 2
e.	Diagnosis if engine systems control unit with pulse readout, engine 103.984 in model 129	N 2
f.	Special tools, Commercially available tools and testers	O 2
g.	Connecting testers according to connection diagram	A 3
h.	Contact assignment of coupling of KE control unit (N3) and of engine systems control unit MAS (N16)	H 3
i.	Test program with contact box	O 3
j.	Test program of engine systems control unit MAS with contact box, engine 103.984 in model 129	B 6
k.	Contact assignment of EZL ignition control unit (N1/2)	N 6
l.	Table of voltage data of EZL/KE coolant temperature sensor (B11/2) and KE intake air temperature sensor (B17/2)	O 6
m.	Testing deceleration fuel shutoff	A 7
n.	Testing KE resistance trimming plug (R17)	B 7
o.	Testing part load mixture adaptation (only RÜF, or Standard/without KAT)	E 7
p.	Testing setup of 4-pin coolant temperature sensor (B11/2)	F 7
q.	Location of plug connections	G 7
r.	Location of ground points	B 8
s.	Location of Hall-effect road speed sensor (B6)	M 8

a. Location of components

Model 107

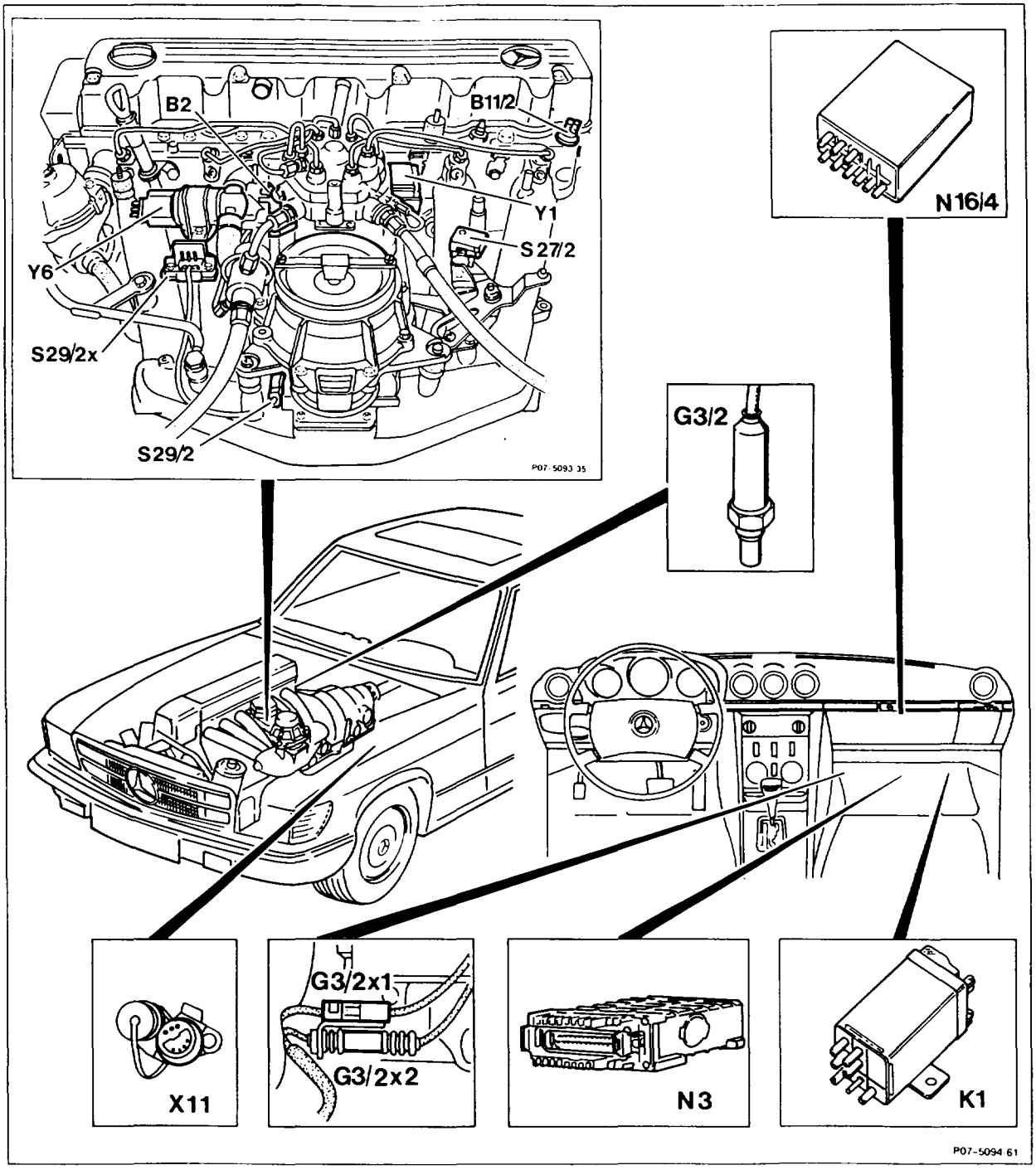

B2	Air flow sensor potentiometer
B11/2	Coolant temperature sensor
G3/2	Heated oxygen sensor
G3/2 × 1	2-pin plug connection, oxygen sensor heating coil
G3/2 × 2	1-pin plug connection, oxygen sensor signal
K1	5-pin overvoltage protection relay
N3	KE injection system control unit
N16/4	Fuel pump and kickdown shutoff relay
S27/2	Decel fuel shutoff microswitch
S29/2	Full load/idle speed recognition throttle valve switch
S29/2 ×	Plug connection, full load/idle speed recognition throttle valve switch
X11	Diagnostic socket/terminal block, terminal TD
Y1	Electrohydraulic actuator
Y6	Idle speed air valve

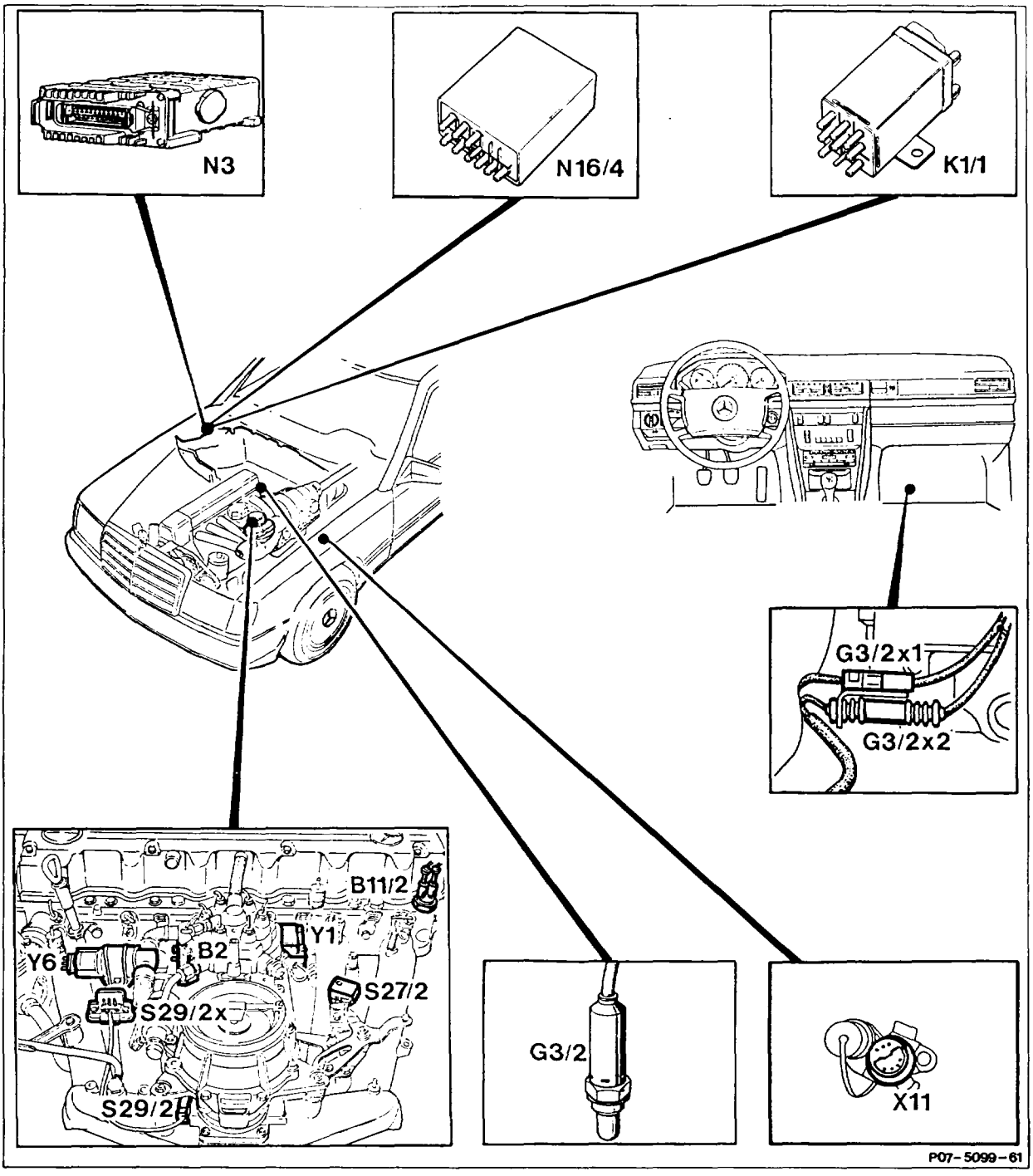
N3
N16/4
K1/1
G3/2x1
G3/2x2
B11/2
Y1
Y6
B2
S27/2
S29/2x
S29/2
G3/2
X11
P07-5099-61

B2	Air flow sensor potentiometer
B11/2	Coolant temperature sensor
G3/2	Heated oxygen sensor
G3/2 x 1	2-pin plug connection, oxygen sensor heating coil
G3/2 x 2	1-pin plug connection, oxygen sensor signal
K1	5-pin overvoltage protection relay
K1/1	7-pin overvoltage protection relay 87E
N3	KE injection system control unit
N16/4	Fuel pump and kickdown shutoff relay
S27/2	Decel fuel shutoff microswitch
S29/2	Full load/idle speed recognition throttle valve switch
S29/2 x	Plug connection, full load/idle speed recognition throttle valve switch
X11	Diagnostic socket/terminal block, terminal TD
Y1	Electrohydraulic actuator
Y6	Idle speed air valve

Note

Engine 103.980 Standard without oxygen sensor (G3/2).

Engine 103.980 (CH) (S) with exhaust gas recirculation (without oxygen sensor).

Engine 103.94/983 (CH) (DK) (N) (S) (SF) as of model year 1991 with oxygen sensor relay (K35) and air injection relay (K17/3).

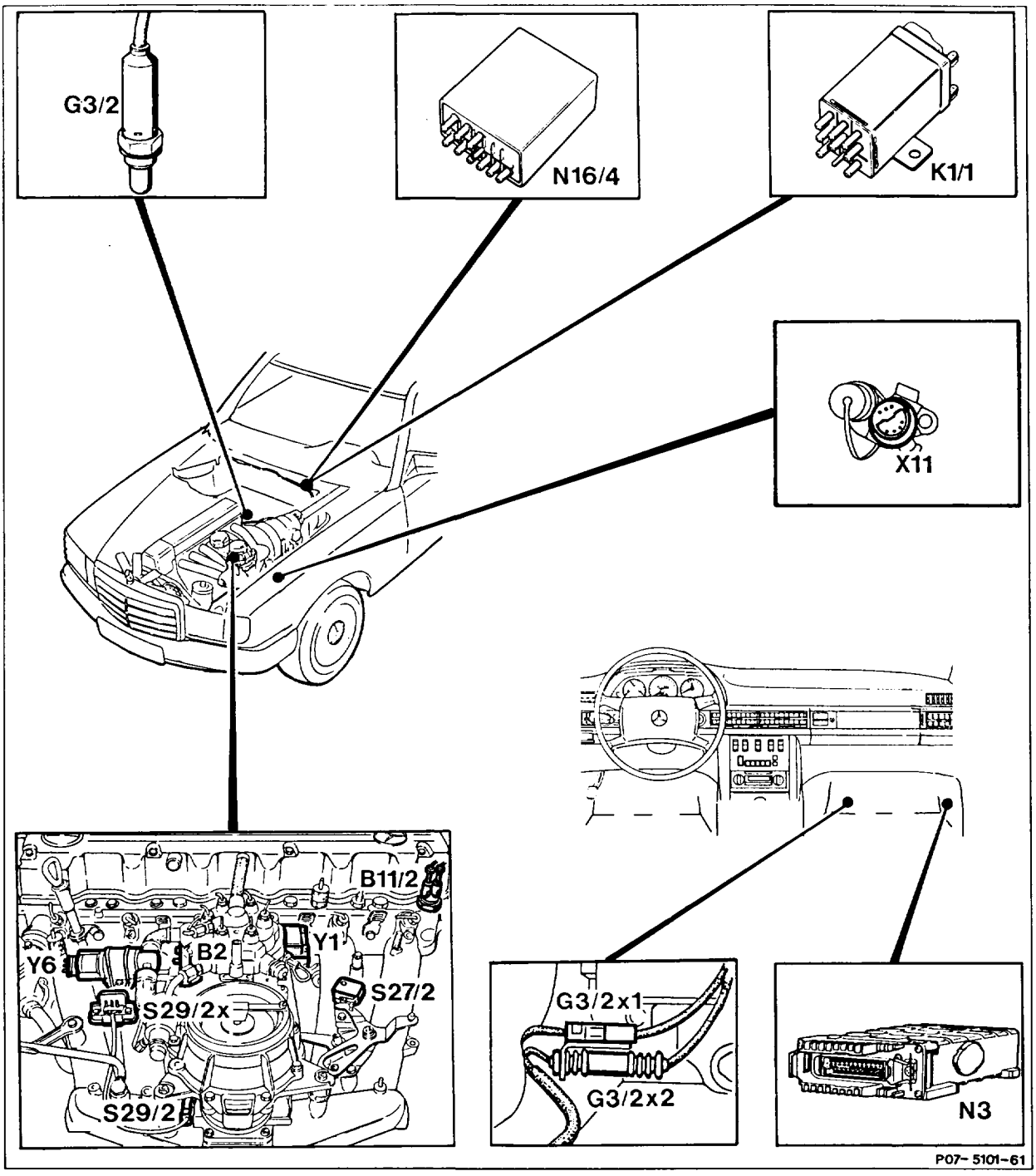
G3/2
N16/4
K1/1
X11
B11/2
Y1
B2
Y6
S27/2
S29/2x
S29/2h
G3/2x1
G3/2x2
N3
P07-5101-61

B2	Air flow sensor potentiometer
B11/2	Coolant temperature sensor
G3/2	Heated oxygen sensor
G3/2 × 1	2-pin plug connection, oxygen sensor heating coil
G3/2 × 2	1-pin plug connection, oxygen sensor signal
K1	5-pin overvoltage protection relay
K1/1	7-pin overvoltage protection relay 87E
N3	KE injection system control unit
N16/4	Fuel pump and kickdown shutoff relay
S27/2	Decel fuel shutoff microswitch
S29/2	Full load/idle speed recognition throttle valve switch
S29/2 ×	Plug connection, full load/idle speed recognition throttle valve switch
X11	Diagnostic socket/terminal block, terminal TD
Y1	Electrohydraulic actuator
Y6	Idle speed air valve

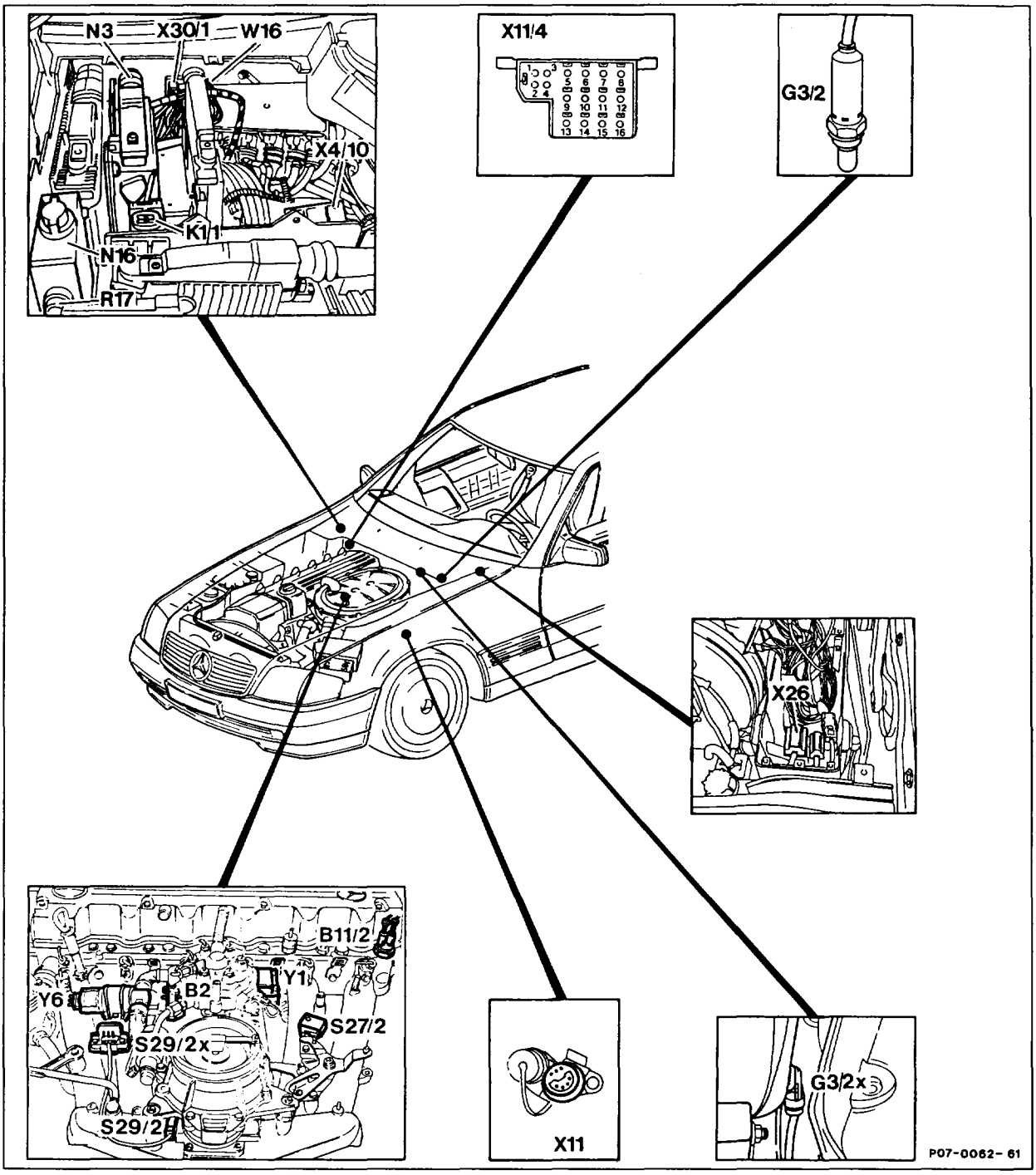
N3
X30/1
W16
X4/10
K1/1
N16
R17
X11/4
G3/2
X26
B11/2
Y1
Y6
B2
S27/2
S29/2x
S29/2
X11
G3/2x
P07-0062-61

B2	Air flow sensor potentiometer
B11/2	Coolant temperature sensor
G3/2	Heated oxygen sensor
G3/2 x 1	3-pin plug connection, oxygen sensor heating coil
K1/2	9-pin overvoltage protection relay
N3	KE injection system control unit
N16	MAS engine systems control unit
R17	KE resistance trimming plug
S27/2	Decel fuel shutoff microswitch
S29/2	Full load/idle speed recognition throttle valve switch
S29/2 x	Plug connection, full load/idle speed recognition throttle valve switch
W16	Component compartment ground
X4/10	Terminal block, terminal 30
X11	9-pin diagnostic socket
X11/4	16-pin test coupling for diagnosis (pulse signal)
X26	12-pin interior/engine plug connection
X30/1	Multifunction block plug connection
Y1	Electrohydraulic actuator
Y6	Idle speed air valve

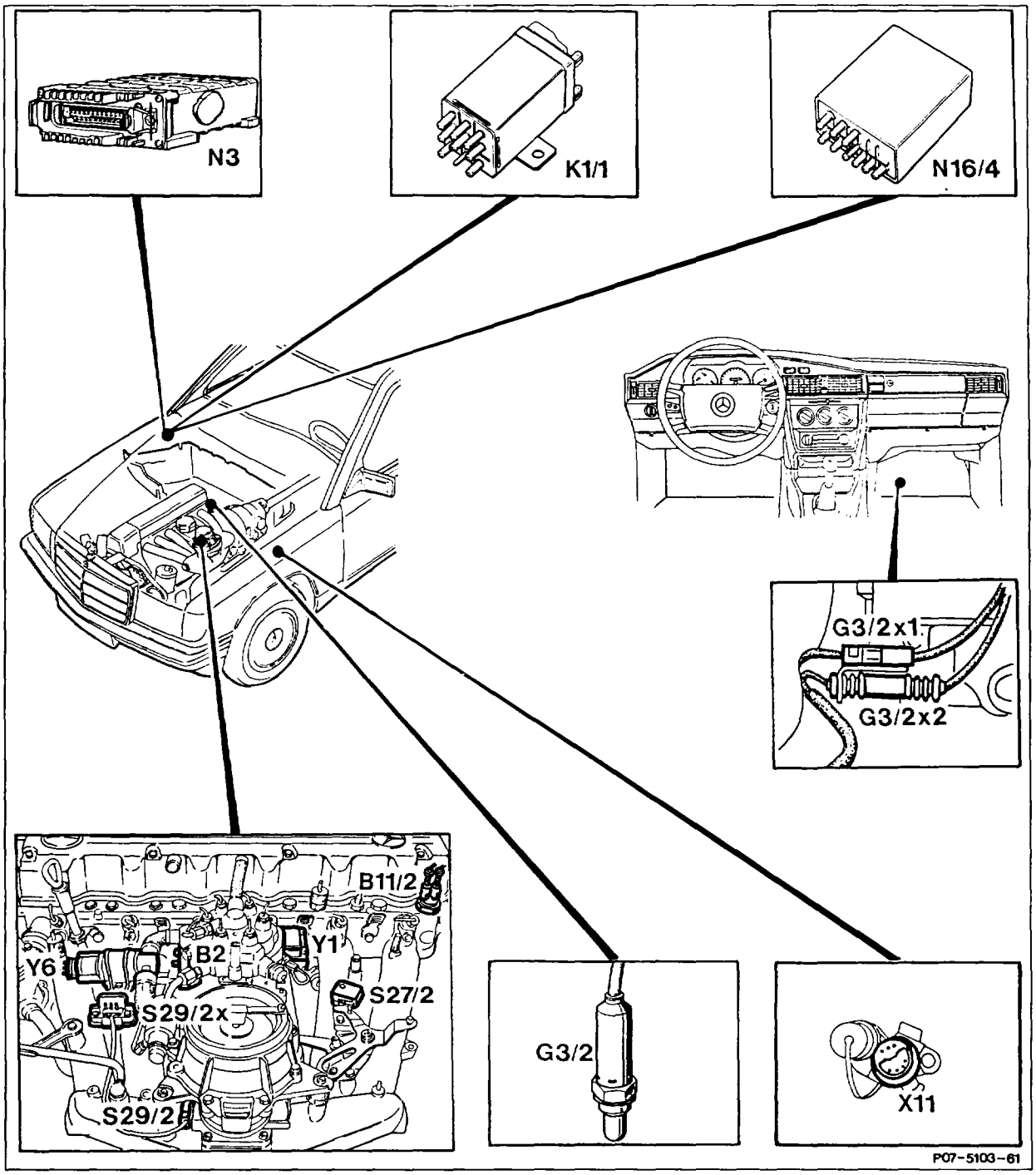
N3
K1/1
N16/4
G3/2x1
G3/2x2
B11/2
Y1
B2
Y6
S27/2
S29/2x
S29/2
G3/2
X11
P07-5103-61

B2	Air flow sensor potentiometer	S27/2	Decel fuel shutoff microswitch
B11/2	Coolant temperature sensor	S29/2	Full load/idle speed recognition throttle valve switch
G3/2	Heated oxygen sensor		
G3/2 x 1	2-pin plug connection, oxygen sensor heating coil	S29/2 x	Plug connection, full load/idle speed recognition throttle valve switch
G3/2 x 2	1-pin plug connection, oxygen sensor signal		
K1/1	7-pin overvoltage protection relay 87E	X11	Diagnostic socket/terminal block, terminal TD
N3	KE injection system control unit	Y1	Electrohydraulic actuator
N16/4	Fuel pump and kickdown shutoff relay	Y6	Idle speed air valve

Note

Engine 103.94 (CH) (DK) (N) (S) (SF) as of model year 1991 with oxygen sensor relay (K35) and air injection relay (K17/3).

b. Electrical test data KE injection system (current at actuator mA)

Engine	Version	Current at actuator with ignition switched on	Coolant temperature sensor		Post-start enrichment at +20°C	Acceleration enrichment at +20°C and blipping throttle	Full load enrichment at approx. 2000/min and blipping throttle	Part load mixture adaptation
			Coolant temperature +20°C (warming up base value) Resistance 2.3–2.8 kΩ Current at actuator mA	Coolant temperature +80°C Resistance 290–370 Ω Current at actuator mA	Current at actuator mA	Current at actuator mA	Current at actuator mA	Current at actuator mA
103.94	KAT as of 08/85 up to 08/87	20	2–6	0 ± 3	3–9	> 15	5–7	Readout fluctuates
	RÜF as of 08/85 up to 08/87	10	16–22	1–2	25–31		4–6	-7 to +4
	KAT as of 09/87	20	-1 to -5 60 s after start	Readout fluctuates	4–8 20 s constant		5–7	Readout fluctuates
	RÜF as of 09/87	10	16–22	1–2	25–31 20 s constant		4–6	-7 to +4
	KAT as of 09/90 [1])	20	0 to –4 60 s after start	Readout fluctuates	4–8 20 s constant		4–9	Readout fluctuates
103.980	Std.	–	15–22	1–2	21–27		4–6	-7 to +4
103.982	KAT	20	2–6	0 ± 3	8–12		5–7	Readout fluctuates
	RÜF	10	15–22	1–2	21–27		5–7	-7 to +4
103.983	KAT as of 09/90 [1])	20	0 to –4 60 s after start	Readout fluctuates	4–8 20 s constant		4–9	Readout fluctuates
103.981 103.983 103.985	KAT up to 08/87	20	2–6	0 ± 3	8–12		5–7	Readout fluctuates
	RÜF up to 08/87	10	15–22	1–2	21–27		5–7	-7 to +4
	KAT as of 09/87	20	-1 to -5 60 s after start	Readout fluctuates	4–8 20 s constant		5–7	Readout fluctuates
	RÜF as of 09/87	10	15–22	1–2	21–27 20 s constant		4–6	-7 to +4

Footnotes see next page.

Engine	Version	Current at actuator with ignition switched on	Coolant temperature sensor		Post-start enrichment at +20°C	Acceleration enrichment at +20 °C and blipping throttle	Full load enrichment at approx 2000/min and blipping throttle	Part load mixture adaptation
			Coolant temperature +20°C (warming up base value) Resistance 2,3–2,8 kΩ Current at actuator	Coolant temperature +80°C Resistance 290–370 Ω Current at actuator	Current at actuator	Current at actuator	Current at actuator	Current at actuator
		mA	mA	mA	mA	mA	mA	mA
103.984	KAT	20	0 to –4 60–120 s after start	Readout fluctuates	4–0 0–20 s after start	>15	4–9	Readout fluctuates
	without KAT	10	15–22 60–120 s after start	1–3	21–27 0–20 s after start		2–8	-7 to +4

Decel fuel shutoff: current at actuator approx. –60 mA.

1) (CH) (DK) (N) (S) (SF) as of model year 1991.

c. Without fault diagnosis by means of on/off ratio

Up to 03/86 (production date 643) no fault recognition integrated in KE control unit (N3).

On these vehicles it is not possible to start off the test program by measuring the on/off ratio.

In this case, perform the test program without % readout, section "i" test program with contact box.

d. With fault diagnosis by means of on/off ratio

Since 04/86 faulty input signals have been recognized by the KE control unit (N3) and passed on to the lambda test output. Fault recognition is performed with a lambda control tester (012) at the diagnostic socket (X11).

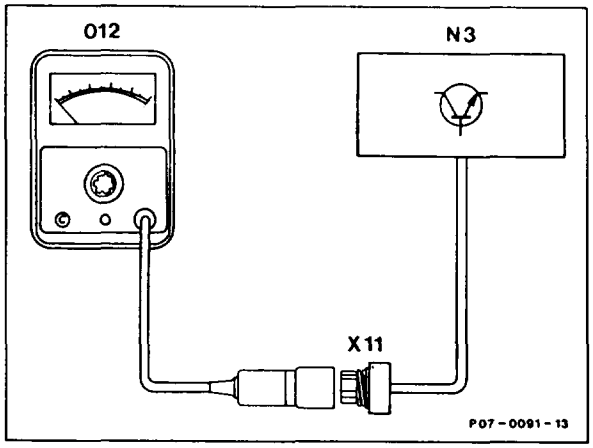

Lambda control tester	Position
Bosch	100 % IR
Hermann	100 % ⏚

Fault recognition enables various components of the KE injection system to be tested by measuring the on/off ratio. The faults are not stored and can only be displayed directly by measuring the on/off ratio (e.g. only if the fault exists at that moment).

Recognition of control units:

1 Connect lambda control tester.
2 Switch on ignition.

On/off ratio readout	Control units
70 %	With fault recognition
100 %	Without fault recognition

For wiring diagrams see appropriate wiring diagram volume (07.3–0128).

Note
Perform test (measuring on/off ratio) if complaint received regarding engine running, e.g. irregular idling.

Readout fluctuates:
No fault in system.
The test steps listed in the column Remedy are contained in section "i."

Test conditions:
Battery voltage 11–14 V.
Engine oil temperature approx. 80°C.
Engine idling.

On/off ratio %	Possible causes of fault	Test scope	Remedy/ Test step
0	Without lambda control: No voltage or ground at diagnostic socket (X11). Cable of diagnostic socket (X11), contact 3, has open circuit. Lambda control tester faulty.	Test voltage supply, ground and diagnostic socket (X11) cable.	1.0–1.2 2.0–2.7
	With lambda control: No voltage or ground at diagnostic socket (X11). Cable of diagnostic socket (X11), contact 3, has open circuit. Lambda control tester faulty.	Test voltage supply, ground and diagnostic socket (X11) cable.	1.0–1.2 2.0–2.7 5.0–5.2
	Mixture setting too rich.	Check lambda setting.	RA 07.3–2053
10	Air flow sensor position indicator (B2) incorrectly connected or faulty. Possible fast idling. Pin assignment of throttle valve switch (S29/2), idle speed/full load contact incorrectly connected or short circuit (full load contact closed if insufficient air throughput).	Test signal of air flow sensor position indicator (B2). Check routing of cables. Check idle speed contact.	6.0–6.3 7.0–7.4

On/off ratio %	Possible causes of fault	Test scope	Remedy/ Test step
20	Full load contact incorrectly connected or faulty. 20% readout only if throttle valve switch (S29/2) operated.	Test full load contact.	8.0–8.3
30	Short circuit or open circuit to KE control unit (N3). Coolant temperature sensor (B11/2) faulty.	Test coolant temperature sensor (B11/2). Test wiring.	9.0–9.8
40	Open circuit or short circuit to air flow sensor position indicator (B2) or position indicator (B2) faulty. Possible fast idling.	Test air flow sensor position indicator (B2). Test KE control unit. Test wiring.	10.0–10.3
50	Without lambda control: With lambda control: Oxygen sensor (G3/2) not operating or faulty. Open circuit in wiring.	No fault in the area of the monitored signals. Engine oil temperature approx. 80 °C. Test oxygen sensor (G3/2). Test wiring. Test oxygen sensor relay. [2]	12.0–12.8 21.0–24.0
60	Road speed signal at KE control unit (N3) implausible. [1]	Test Hall-effect sensor (B6). Test wiring.	13.0–14.3
70	No TD/TN signal. Open circuit in wiring at KE control unit (N3).	Test TD/TN signal.	15.0–16.3
80	Open circuit in wiring or short to ground. Intake air temperature sensor (B17/2) faulty.	Test intake air temperature sensor (B17/2). Test wiring.	17.0–17.3

[1] The plausibility of the road speed signal can **only** be checked by the KE control unit (N3) when driving (engine output dynamometer/road). If an implausible road speed signal is recognized when driving, the control unit (N3) "sets" the on/off ratio of 60% and stores this. The fault is not erased until the ignition is switched off. A "60% on/off ratio" test is performed e.g. in dealing with the complaint: jerking when vehicle moving and throttle valve closed.

[2] Engine 103.94/983 (CH) (DK) (N) (S) (SF) as of model year 1991.

On/off ratio %	Possible causes of fault	Test scope	Remedy/ Test step
90	Not assigned.	–	–
95	Decel fuel shutoff active.	–	–
100	Without lambda control: No voltage or ground at KE control unit (N3) or KE control unit (N3) faulty. Overvoltage protection fuse or overvoltage protection (K1/1) faulty. Lambda control tester faulty. With lambda control: No voltage or ground at KE control unit (N3) or KE control unit (N3) faulty. Lambda setting too lean. Oxygen sensor (G3/2) faulty (short to ground). Overvoltage protection fuse or overvoltage protection (K1/1) faulty. Lambda control tester faulty.	Test overvoltage protection (K1/1). Test ground. Test KE control unit (N3). Test overvoltage protection (K1/1). Test ground. Check setting of lambda control. Text oxygen sensor signal. KE control unit (N3) faulty.	1.0–1.2 2.0–2.7 7.1 1.0–1.2 2.0–2.7 RA 07.3–2053 12.0–12.8 13.1
Readout fluctuates	With lambda control: No fault in the monitored signals area.	–	–

e. Diagnosis of engine systems control unit with pulse readout, engine 103.984 in model 129

The faults listed below are recognized and stored in the engine systems control unit MAS. The stored faults can be interrogated with the pulse counter at the test coupling (X11/4), contact 14.
The test steps listed in the column Remedy are presented in section "j."

Pulse readout	Possible cause	Remedy/ Test step
1	No fault in system.	–
2	Fuel pump relay not operating.	6.0
3	TD signal interrupted (not applicable as of 05/90).	8.0–9.2
4	Output stage for actuating oxygen sensor heater faulty.	10.0–11.5
5	Output stage for actuating air pump faulty.	15.0–15.2
6	Output stage for actuating kickdown switch faulty.	16.0–17.0
7	Not assigned.	–
8	Coolant temperature signal.	14.0
9	Not assigned (as of approx. 05/90 open circuit in oxygen sensor heater).	10.0–11.5
10	Output stage of start valve.	18.0–18.4
11	No cut-in signal for A/C compressor.	12.0–12.1
12	Output stage for actuating A/C compressor faulty.	13.0
13	A/C compressor slip too large.	13.0
14	Not assigned.	–
15	Short circuit recognition in fuel pump circuit.	2.0, 5.0

f. Special tools

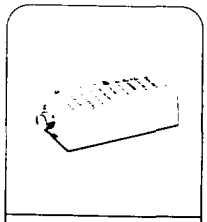

124 589 00 21 00
54

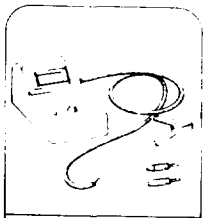

124 589 19 21 00
07 83

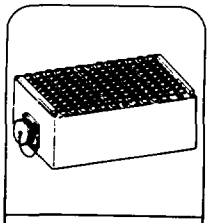

129 589 00 21 00
54

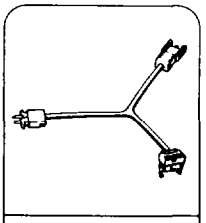

102 589 04 63 00
07

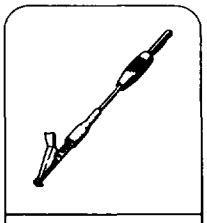

102 589 05 63 00
07

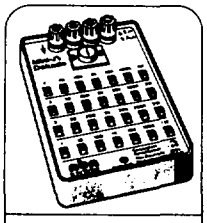

124 589 09 63 00
15 54

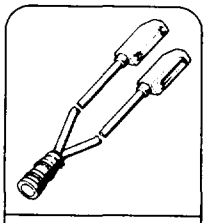

124 589 33 63 00
07 28 54

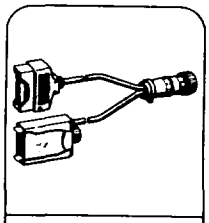

129 589 05 63 00
15

201 589 00 99 00
15 54

Commercially available tools and testers (see Workshop Equipment Manual)

Designation	e.g. Make, order no.
Multimeter	Sun, DMM-5
Twin socket	Hermann, ECD 53
Lambda control tester	Hermann, L 115
Engine tester	Bosch, MOT 002.02

g. Connecting testers according to connection diagram

Model 107

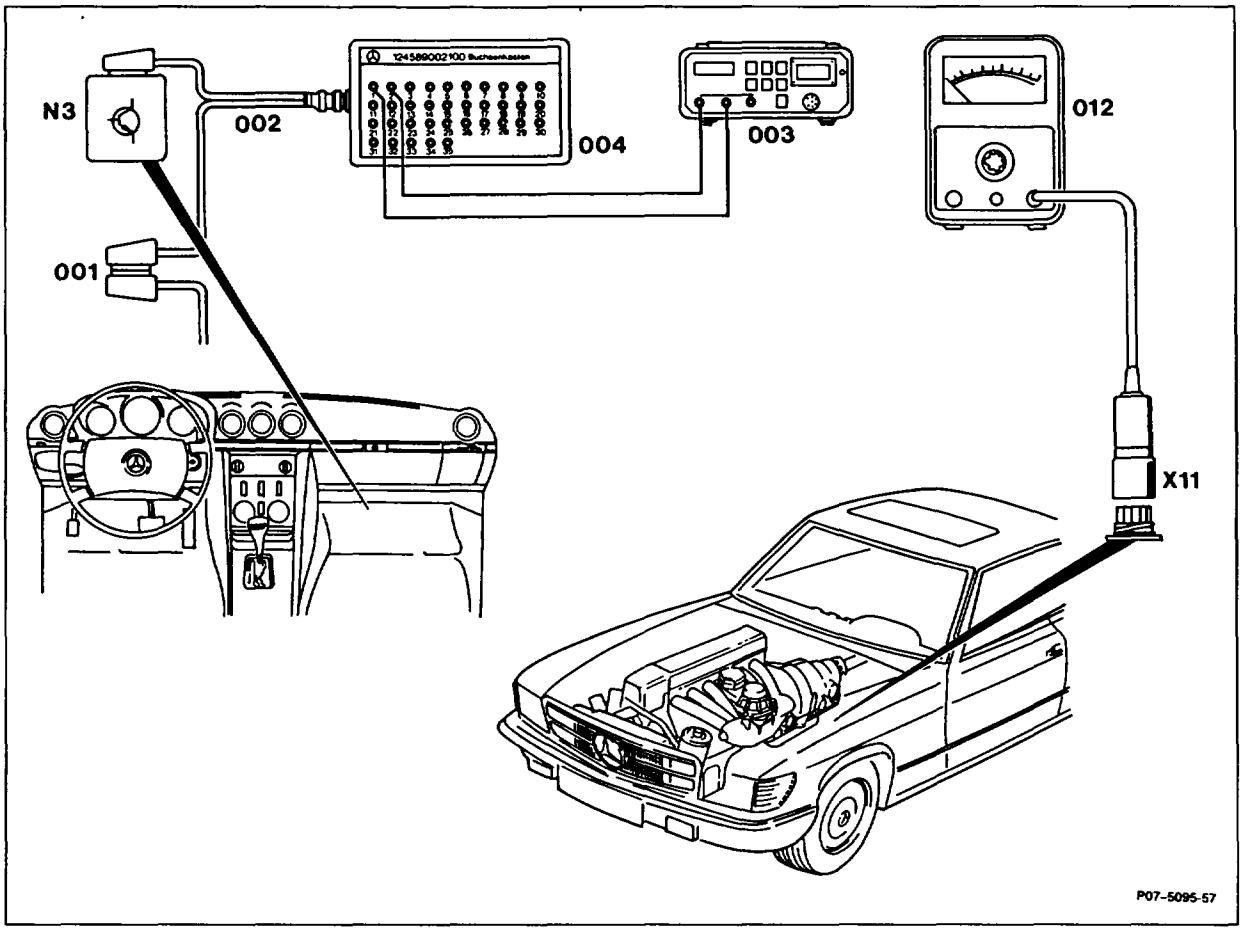

001	KE control unit coupling	012	Lambda control tester
002	Test cable	N3	KE control unit
003	Multimeter	X11	Diagnostic socket, terminal block, terminal TD
004	35-pin contact box		

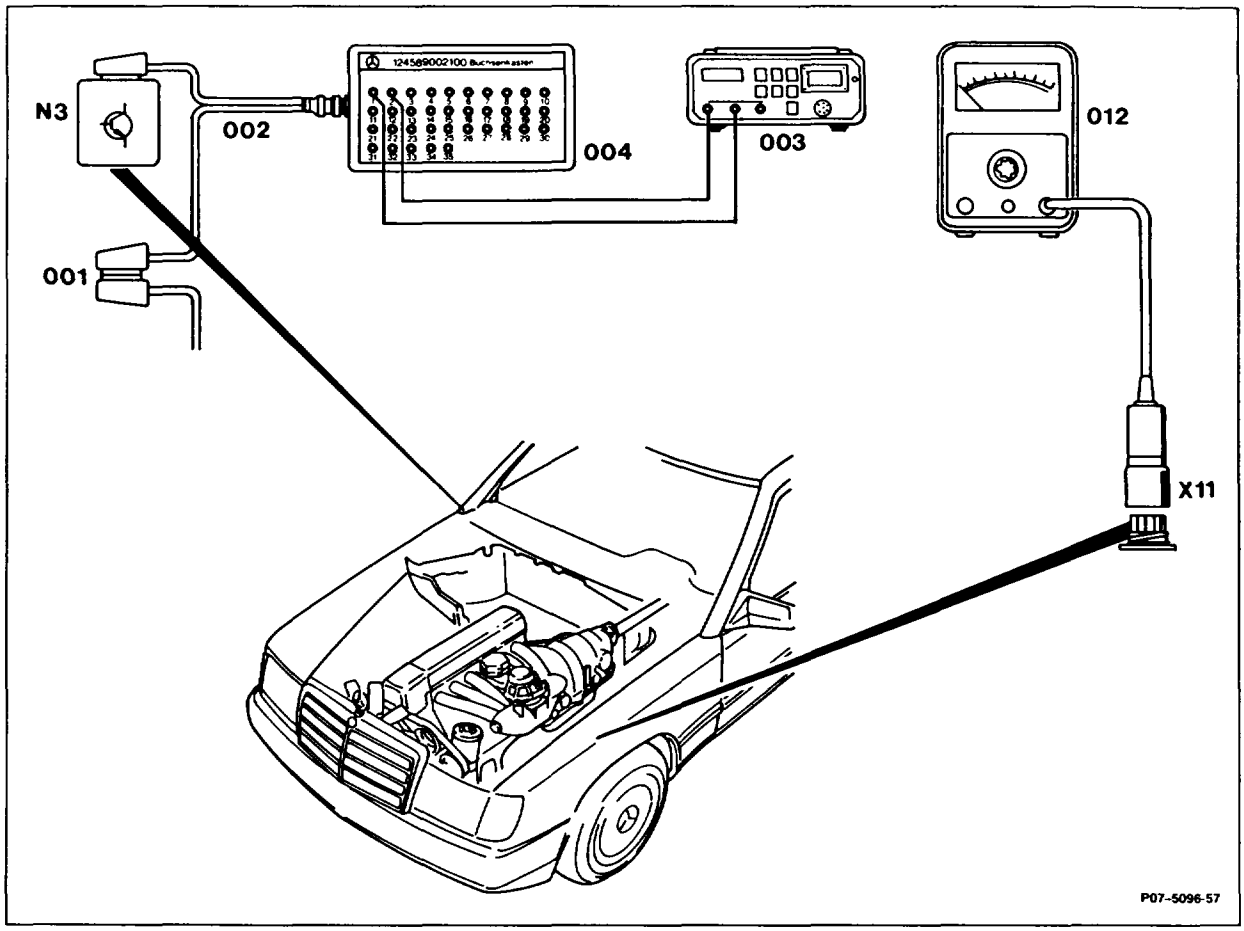

001	KE control unit coupling	012	Lambda control tester
002	Test cable	N3	KE control unit
003	Multimeter	X11	Diagnostic socket, terminal block, terminal TD
004	35-pin contact box		

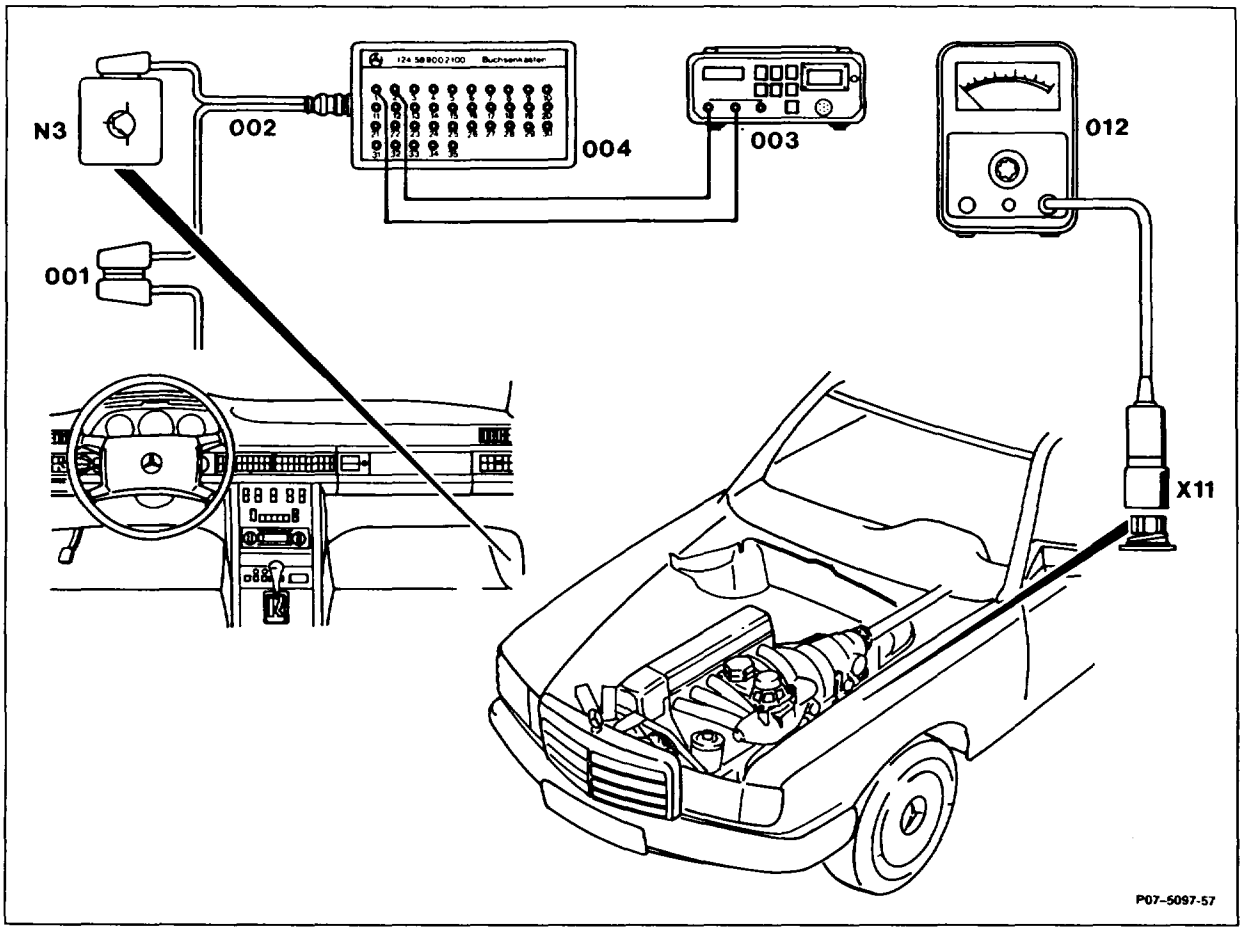

001	KE control unit coupling	012	Lambda control tester
002	Test cable	N3	KE control unit
003	Multimeter	X11	Diagnostic socket, terminal block, terminal TD
004	35-pin contact box		

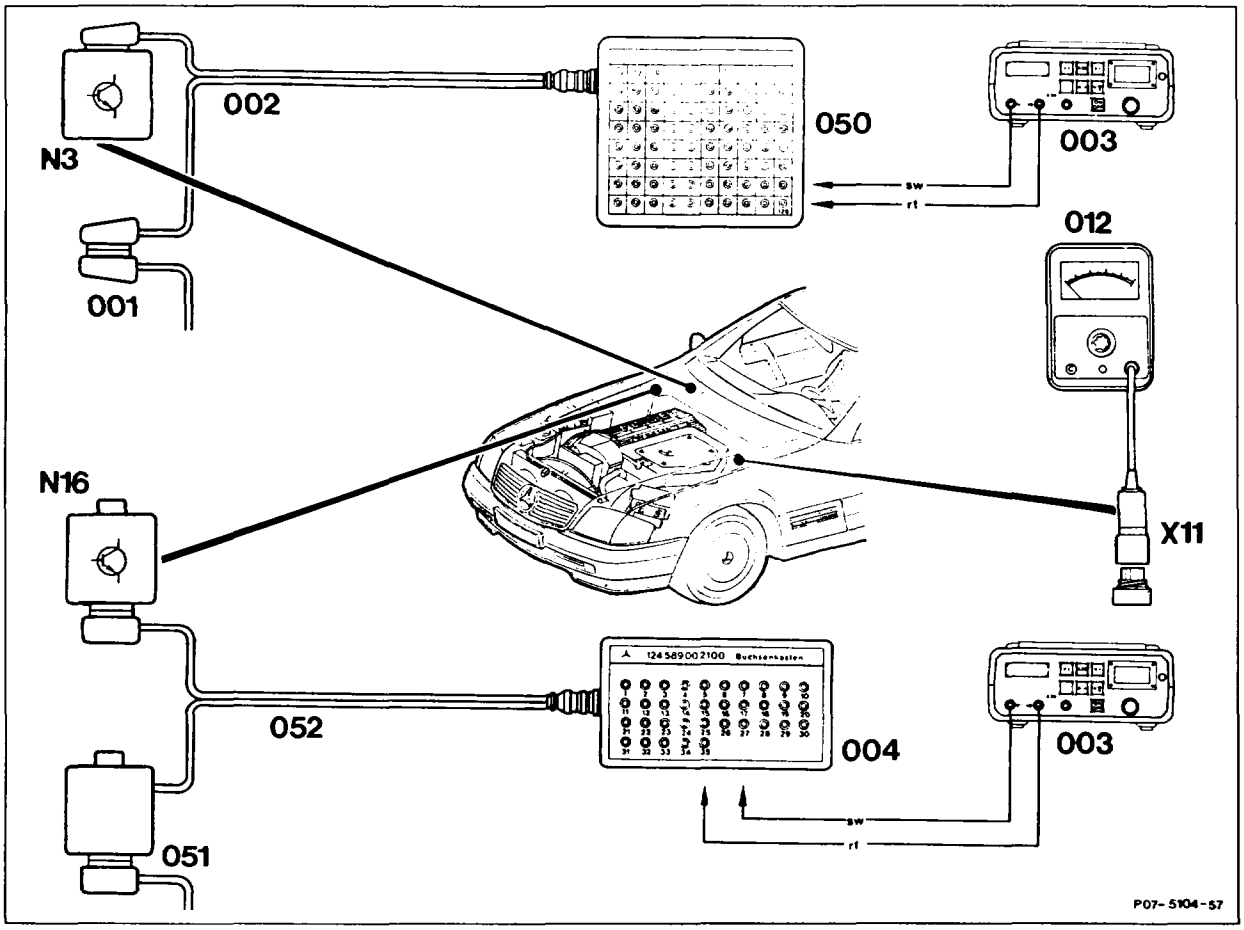

001	KE control unit coupling	051	Engine systems control unit coupling
002	Test cable 124 589 33 63 00	052	Test cable 129 589 05 63 00
003	Multimeter	N3	KE control unit
004	35-pin contact box	N16	Engine systems control unit MAS
012	Lambda control tester	X11	9-pin diagnostic socket
050	126-pin contact box		

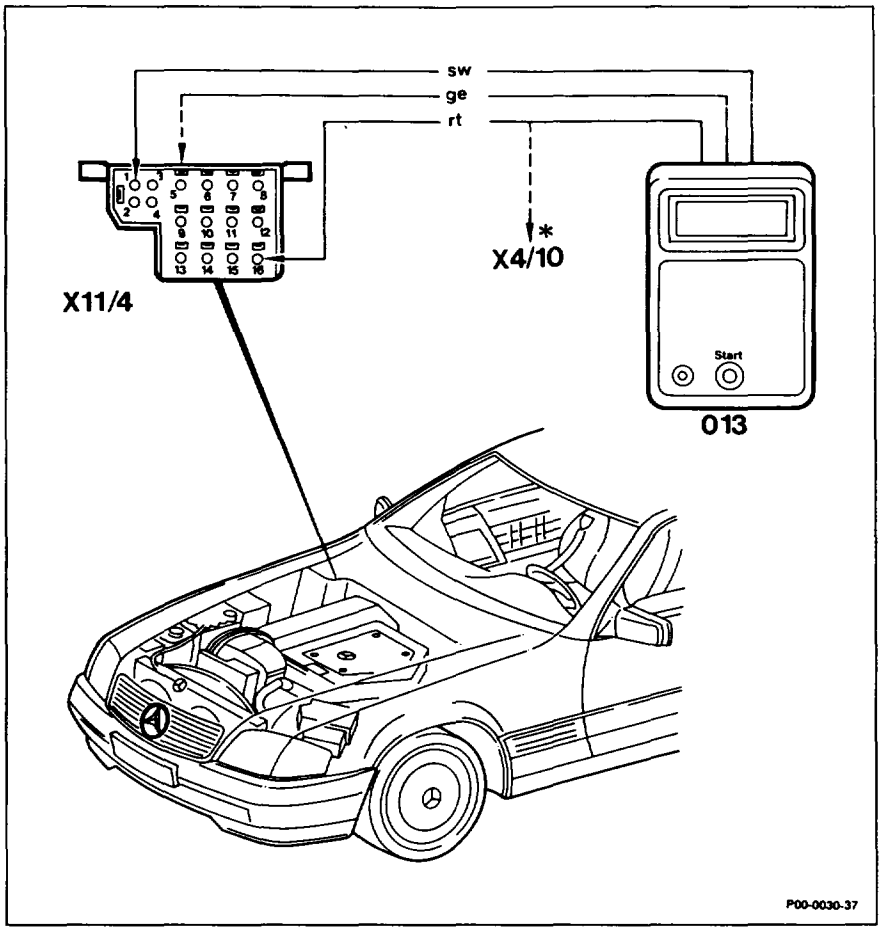

Contact 1	Terminal 31 (ground)
Contact 16	Terminal 30 (positive)
013	Pulse counter
X4/10	Terminal block, terminal 30/30Ü/61e/87L (alternatively)
X11/4	Test coupling for diagnosis, 16-pin (pulse counter) alternatively

h. Contact assignment coupling KE control unit (N3) and engine systems control unit MAS (N16)

Contact assignment of coupling of KE control unit (N3)

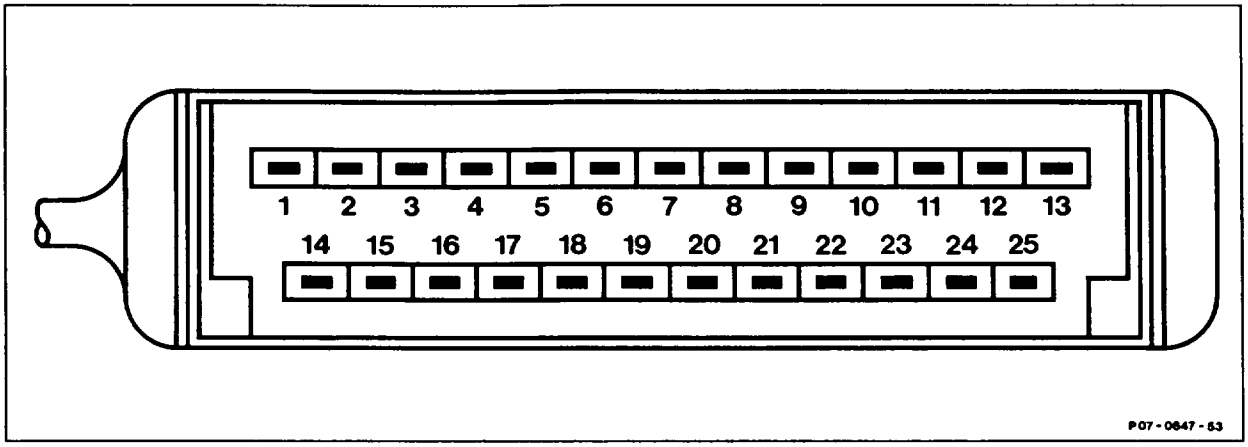

Engine 103.980 Standard model 124

1	Overvoltage protection relay (K1, K1/1), contact 2, terminal 87
2	Engine ground (W5)
3	Idle speed air valve (Y6), contact 1
4	Plug connection, trip computer (X61)
5	Throttle valve switch (S29/2), contact 3, full load/idle speed recognition
6	Not assigned or Tempomat cruise control plug connection (X33)
7	Ground (W5)
8	Not assigned
9	Fuel pump relay (N16/1), contact 2, terminal TF
10	Electrohydraulic actuator (Y1), contact 2
11	Not assigned
12	Electrohydraulic actuator (Y1), contact 1
13	Throttle valve switch (S29/2), contact 1, full load/idle speed recognition
14	Not assigned
15	Not assigned
16	Plug connection (X26), contact 7, manual transmission Plug connection (X26), contact 10, automatic transmission
17	Air flow sensor position indicator (B2), contact 2
18	Air flow sensor position indicator (B2), contact 3
19	A/C compressor cutout control unit (N6), contact 4, terminal 87Z
20	Model 124: battery ground (W10)
21	Coolant temperature sensor (B11/2)
22	KE resistance trimming plug (R17)
23	Not assigned
24	Microswitch (S28)
25	Fuel pump relay (N16/1), contact 10, terminal TD

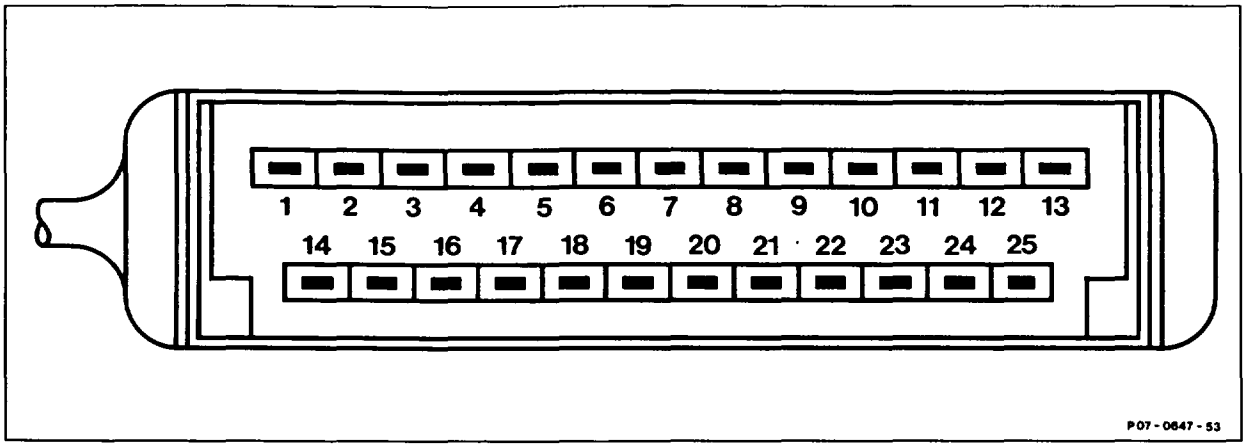

Engine 103.94/98 (except engine 103.980/984) models 107, 124, 126, 201

1 Overvoltage protection relay (K1/1), contact 2, terminal 87
2 Engine ground (W11)
3 Idle speed air valve (Y6), contact 1
4 Not assigned
5 Throttle valve switch (S29/2), contact 3, full load recognition
6 Hall-effect road speed sensor (B6)
7 Ground of connector 7 is linked internally to ground of connector 2
8 Heated oxygen sensor (G3/2), sensor signal
9 Fuel pump relays (N16/3, N16/4), TF signal
10 Electrohydraulic actuator (Y1), contact 2
11 Intake air temperature sensor ((B17/2), contact 3
12 Electrohydraulic actuator (Y1), contact 1
13 Throttle valve switch (S29/2), contact 1, idle speed recognition
14 Not assigned [1]
15 Not assigned
16 Model 107:
Plug connection, interior/engine (X26), contact 4, gear recognition
Model 124:
Plug connection, interior/engine (X26), contact 10, gear recognition
Model 126:
Plug connection, interior/engine (X26), contact 10, gear recognition
Model 201 manual transmission:
battery ground (W10)
Model 201 automatic transmission:
Plug connection, engine wiring harness/taillamp harness, 2-pin (X26/3)
17 Air flow sensor position indicator (B2), contact 2
18 Air flow sensor position indicator (B2), contact 3
19 A/C compressor cutout control unit (N6), contact 4
20 Battery ground (W10)
21 Coolant temperature sensor (B11/2)
22 KE resistance trimming plug (R17)
23 Diagnostic socket (X11), contact 3, on/off ratio
24 Decel fuel shutoff microswitch (S27/2), contact 1
25 Fuel pump relays (N16/3, N16/4), contact 10, TD signal

[1] Engine 103.94/983 (CH) (DK) (N) (S) (SF) air injection/transmission shift point retard relay (K17/3) as of model year 1991.

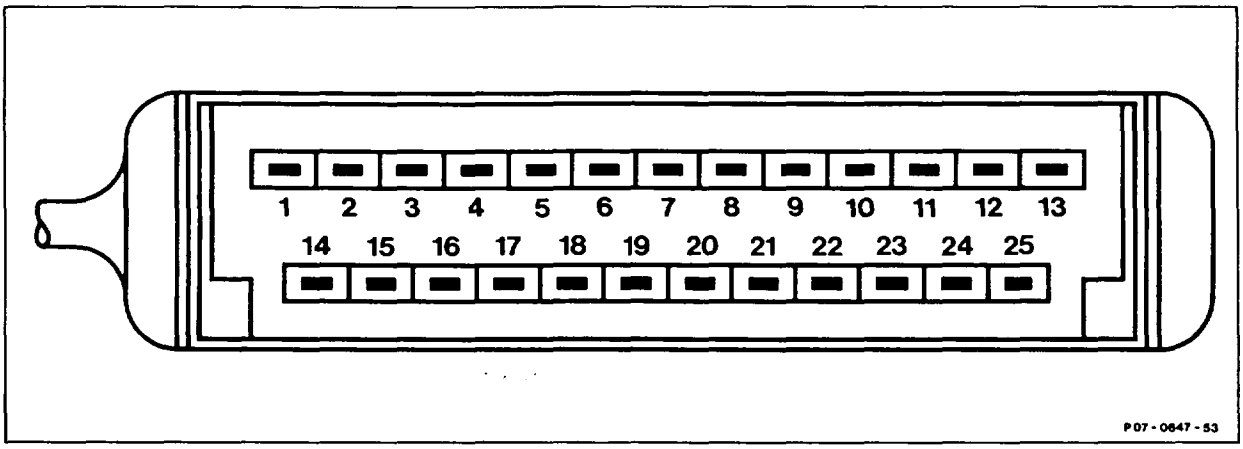

Engine 103.984 model 129

1	Battery voltage, terminal 87 E (K1/1)
2	Engine ground (W11)
3	Idle speed air valve (Y6), contact 1
4	Fuel consumption signal (X26), contact 6
5	Throttle valve switch (S29/2), contact 3, full load recognition
6	Road speed signal (X30/1)
7	Ground of connector 7 is connected internally to ground of connector 2
8	Oxygen sensor signal (G3/2)
9	TF signal (coolant temperature) to engine systems control unit (N16)
10	Electrohydraulic actuator (Y1), contact 2
11	Intake air temperature sensor ((B17/2), contact 3
12	Electrohydraulic actuator (Y1), contact 1
13	Throttle valve switch (S29/2), contact 1, idle speed recognition
14	Air injection (control signal) to engine systems control unit (N16)
15	Not assigned
16	Plug connection, interior/engine (X26), contact 4, gear recognition/terminal 50
17	Air flow sensor position indicator (B2), contact 2
18	Air flow sensor position indicator (B2), contact 3
19	A/C compressor cut-in signal from (N16), terminal 87 Z
20	Component compartment ground (W16)
21	Coolant temperature sensor (B11/2)
22	KE resistance trimming plug (R17)
23	Diagnostic socket (X11), contact 3, on/off ratio
24	Decel fuel shutoff signal, microswitch/electronic accelerator pedal
25	TDA signal from engine systems control unit (N16)

Contact assignment of coupling of engine systems control unit MAS

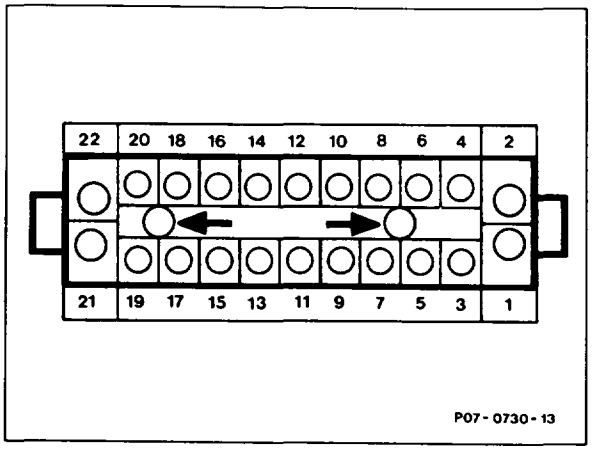

Engine 103.984 model 129

1E	Voltage supply, terminal 30 (battery)
2A	Fuel pumps actuation
3E	A/C compressor control signal
4E	Terminal 31, ground
5E	Engine speed signal (+) for A/C compressor
6E	Engine speed signal (–) for A/C compressor
7E	Kickdown cutoff
8A	Start valve actuation
9A	A/C compressor cut-in signal (to KE control unit)
10E	Voltage supply, terminal 15, unfused (ignition)
11A	TDA signal (engine speed)
12E	Start signal (terminal 50)
13E	Coolant temperature sensor
14A	Diagnosis pulse output
15	Not assigned
16E	TD signal from EZL/AKR ignition control unit
17E	Air pump control signal
18	Not assigned
19A	Air pump actuation
20A	Oxygen sensor heater actuation
21E	Voltage supply, terminal 15, fused (ignition)
22A	A/C compressor coupling actuation
A	Output signal
E	Input signal
Arrow	Anti-twist lock

i. Test program of KE control unit (N3) with contact box

Symbols for testers

Contact box

Lambda control tester

Multimeter

Battery

 Contact

 Connector

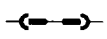 Bridge

Symbols for test mode with multimeter

Voltage measurement (volts, DC)

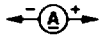 Current measurement (amperes, DC)

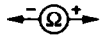 Resistance measurement (ohms)

Note

If the on/off ratio readout is constant, first of all perform test steps 1–3.
If the specification of a test step, e.g. step 4, is in order, it is not necessary to perform test step 4.1.

If in test step 7 the test values are achieved at the throttle valve switch (S29/2) during part load mixture adaptation, the full load enrichment is also active.

Overvoltage protection K1/2 is installed on vehicles with optional equipment (e.g. ASD) in place of overvoltage protection K1/1.

Test steps 1–20 apply to basic and national versions (except (J) (USA)).

Tests 21–28, oxygen sensor relay (K35) and air injection/transmission shift point retard relay (K17/3), apply only to models 124, 201 (CH) (DK) (N) (S) (SF) as of model year 1991.

The oxygen sensor relay (K35) on model 124 is installed in position "E" in the fuse and relay box; on model 201 in position "F" in the relay box in front of the electrical centre.

On/off ratio readout in %	Test step/ Test scope	Test connection	Operation/ Requirement	Specification	Possible cause/Remedy
–	1.0 Ground points	N3 X4/10 (X35) 2 — V — Kl. 30	Ignition: **ON**	11–14 V	Ground connection W11, loose, Open circuit in wiring
	1.1	N3 X4/10 (X35) 7 — V — Kl. 30	Ignition: **ON**	11–14 V	KE control unit (N3) faulty
	1.2	N3 X4/10 (X35) 20 — V — Kl. 30	Ignition: **ON**	11–14 V	Ground connection W10 (model 107: W1, model 129: W16) loose, Open circuit in wiring
–	2.0 Supply voltage of N3	N3 2 — V — 1	Ignition: **ON**	11–14 V	Fuse in overvoltage protection K1/1 [1]), overvoltage protection K1/1 [1]) faulty or not plugged in, Open circuit in wiring
	2.1 Voltage, terminal 30	N3 K1/1 2 — V — 1	Ignition: **OFF** Overvoltage protection relay (K1/1) [1]) removed	11–14 V	Open circuit in wiring
	2.2 Voltage, terminal 15 [2])	N3 K1/1 2 — V — 3 N3 K1 2 — V — 6	Ignition: **ON** Overvoltage protection relay (K1/1) [1]) removed	11–14 V	Open circuit in wiring
	2.3 Cable, terminal 30	N3 X4/10 (X35) 2 — V — Kl.30	Ignition: **ON** Overvoltage protection relay (K1/1) removed [1])	11–14 V	Open circuit in wiring

1) K1, K1/1 or K1/2

2) For 5-pin overvoltage protection relay (K1), → at contact 6
For 7-pin overvoltage protection relay (K1/1), → at contact 3
For 9-pin overvoltage protection relay (K1/2), → at contact 3

On/off ratio readout in %	Test step/ Test scope	Test connection	Operation/ Requirement	Specification	Possible cause/Remedy
	2.4 Cable terminal 15	N3 (2) — V — N16/4 (9)	Ignition: **ON** Fuel pump relays (N16/4, N16/3) removed	11–14 V	Open circuit in wiring
–	2.5 Cable terminal 87E or 87	N3 (1) — Ω — K1/1 (2)	Ignition: **OFF** Overvoltage protection relay (K1/1) [1] removed	< 1 Ω	Open circuit in wiring
	2.6 Cable terminal 31 (ground)	⊥ — Ω — K1/1 (5)	Ignition: **OFF** Overvoltage protection relay (K1/1) [1] removed	< 1 Ω	Open circuit in wiring
–	3.0 Overvoltage protection relay (K1/1) [1]		Fuse at overvoltage protection (K1/1) [1] removed, visual inspection		Fuse
	3.1	K1/1 (1) — (2) ⊥ — V — N3 (1)	Ignition: **ON** Overvoltage protection relay (K1/1) [1] removed	11–14 V	Test voltage supply
	3.2 [2]	K1/1 (5) — V — (6) K1/1 (5) — V — (3)	Ignition: **ON** Overvoltage protection relay (K1/1) [1] removed	11–14 V	Test voltage supply

1) K1, K1/1 or K1/2

2) For 5-pin overvoltage protection relay (K1), → at contact 6
For 7-pin overvoltage protection relay (K1/1), → at contact 3
For 9-pin overvoltage protection relay (K1/2), → at contact 3

On/off ratio readout in %	Test step/ Test scope	Test connection	Operation/ Requirement	Specification	Possible cause/Remedy
–	4.0 Current at electro-hydraulic actuator (Y1)	 set to A Y1 2 — 1	Ignition: **OFF** Connect test cable 102 589 04 63 00 to actuator (Y1) Ignition: **ON**	KAT: 20 mA RÜF, without KAT: 10 mA Std.: 0 mA	Electrohydraulic actuator (Y1), KE control unit (N3), KE resistance trimming plug (R17), Open circuit in wiring
			Engine: **idling** at operating temperature	KAT: fluctuates 0 ± 3 mA RÜF, without KAT, Std.: 1–2 mA Engine 103.984: without KAT: 1–3 mA	Set lambda control, Test oxygen sensor (test step 12.0–12.8)
	4.1 Fault circuit electro-hydraulic actuator (Y1)	N3 10 — 12	Ignition: **OFF** Disconnect test cable, KE control unit (N3) unplugged	19.5 ± 1Ω	Electrohydraulic actuator (Y1), Open circuit in wiring
	4.2 Electro-hydraulic actuator (Y1)	Y1 1 — 2	Ignition: **OFF** Coupling (Y1) unplugged	19.5 ± 1Ω	Electrohydraulic actuator (Y1)

On/off ratio readout in %	Test step/ Test scope	Test connection	Operation/ Requirement	Specification	Possible cause/Remedy
	4.3 Cable	N3 Y1 10 — Ω — 2	Ignition: **OFF** Coupling (Y1) unplugged	< 1 Ω	Open circuit in wiring
	4.4 Cable	N3 Y1 12 — Ω —	Ignition: **OFF** Coupling (Y1) unplugged	< 1 Ω	Open circuit in wiring
–	5.0 Cable from control unit (N3) to diagnostic socket (X11) [1]	N3 X11 23 — Ω — 3	Ignition: **OFF** KE control unit (N3) unplugged	< 1 Ω	Open circuit in wiring
	5.1 Cable	X11 ⊥ — Ω — 2	Ignition: **OFF**	< 1 Ω	Open circuit in wiring
	5.2 Cable	X11 2 — V — 6	Ignition: **ON**	11–14 V	Open circuit in wiring, Fuse F1

[1]) except engine 103.980 Std.

On/off ratio readout in %	Test step/ Test scope	Test connection	Operation/ Requirement	Specification	Possible cause/Remedy
10	6.0 Air flow sensor position indicator (B2)	N3 7 — (V) — 18	Engine: **start**	4.6–5.1 V	Air flow sensor position indicator, KE control unit (N3), Open circuit in wiring [1]
		N3 7 — (V) — 17	Engine runs at idle speed	0.55–0.95 V Engine 103.980 (CH) (S) 0.75–1.05 V	Air flow sensor position indicator, KE control unit (N3), Open circuit in wiring [1]
	6.1 Cable	N3 B2 1 — (Ω) — 7	Ignition: **OFF** KE control unit (N3) unplugged	< 1 Ω	Open circuit in wiring
	6.2 Cable	N3 B2 2 — (Ω) — 17	Ignition: **OFF** KE control unit (N3) unplugged	< 1 Ω	Open circuit in wiring
	6.3 Cable	N3 B2 3 — (Ω) — 18	Ignition: **OFF** KE control unit (N3) unplugged	< 1 Ω	Open circuit in wiring
10	7.0 Distinction test (except engine 103.980 Std.)		Ignition: **ON** Open microswitch (throttle valve must not be opened)		Readout 40%, see test step 10.0–11.1, Readout 20%, see test step 8.0–8.3, Readout 70%, see test step 15.0–16.3

[1]) See also test step air flow sensor position indicator (10.0–10.3).

On/off ratio readout in %	Test step/ Test scope	Test connection	Operation/ Requirement	Specification	Possible cause/Remedy
	7.1 Fault circuit idle speed contact (S29/2)	N3 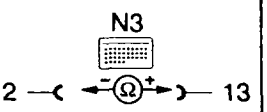 2 — 13	Ignition: **OFF** KE control unit (N3) and connector B unplugged from EZL ignition control unit (N1/2) Depress accelerator	< 1 Ω ∞	Pin assignment of coupling (S29/2 × 1) incorrectly connected, Idle speed contact, Open circuit in wiring
	7.2 Idle speed contact (S29/2)	S29/2 × 1 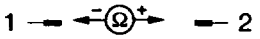 1 — 2	Coupling (S29/2 × 1) unplugged, idle speed position Depress accelerator	< 1 Ω ∞	Adjust throttle valve switch (S29/2)
	7.3 Cable	N3 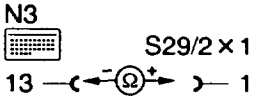 S29/2 × 1 13 — 1	Ignition: **OFF**	< 1 Ω	Open circuit in wiring
	7.4 Cable	N3 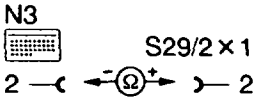 S29/2 × 1 2 — 2	Ignition: **OFF**	< 1 Ω	Open circuit in wiring
20	8.0 Fault circuit full load contact (S29/2)	N3 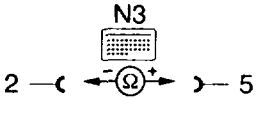 2 — 5	Ignition: **OFF** Coupling at KE control unit (N3) unplugged Accelerator in full throttle position	∞ < 1 Ω	Pin assignment of coupling S29/2 × 1 incorrectly connected, Full load contact, Open circuit in wiring
	8.1 Full load contact (S29/2)	S29/2 × 1 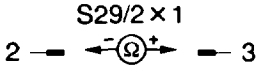 2 — 3	Ignition: **OFF** Coupling (S29/2 × 1) unplugged Accelerator in full throttle position	∞ < 1 Ω	Adjust or replace throttle valve switch (S29/2)

On/off ratio readout in %	Test step/ Test scope	Test connection	Operation/ Requirement	Specification	Possible cause/Remedy
	8.2 Cable	N3 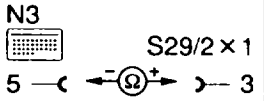 S29/2 × 1 5 — 3	Ignition: **OFF**	< 1 Ω	Open circuit in wiring
	8.3 Cable	N3 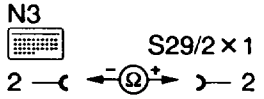 S29/2 × 1 2 — 2	Ignition: **OFF**	< 1 Ω	Open circuit in wiring
30	9.0 Fault circuit coolant temperature sensor (B11/2)	N3 7 — 21	Engine: **idling** KE control unit (N3) connected	At + 80 °C 0.29–0.35 V, other values see table temperature sensor (B11/2)	Coolant temperature sensor (B11/2), Open circuit in wiring
	9.1 Coolant temperature sensor (B11/2) 2-pin	N3 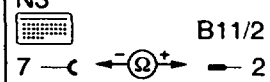 B11/2 7 — 2 N3 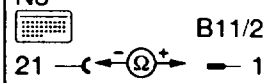 B11/2 21 — 1	Ignition: **OFF** Coupling at temperature sensor (B11/2) disconnected	See diagram temperature sensor (B11/2)	Coolant temperature sensor (B11/2)
	9.2 Cable	N3 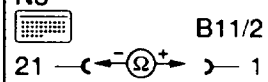 B11/2 21 — 1	Ignition: **OFF** Coupling at temperature sensor (B11/2) disconnected	< 1 Ω	Open circuit in wiring
	9.3 Cable	N3 B11/2 7 — 2	Ignition: **OFF**	< 1 Ω	Open circuit in wiring

On/off ratio readout in %	Test step/ Test scope	Test connection	Operation/ Requirement	Specification	Possible cause/Remedy
	9.4 Coolant temperature sensor (B11/2) 4-pin	B11/2 1 — Ω — 3 B11/2 2 — Ω — 4	Ignition: **OFF** Coupling at temperature sensor (B11/2) disconnected, measure resistances 2× diagonally and compare [1]	See table temperature sensor (B11/2)	Coolant temperature sensor (B11/2)
	9.5 Cable	N3 — B11/2 7 — Ω — 4	Ignition: **OFF** Coupling at temperature sensor (B11/2) disconnected	< 1 Ω	Open circuit in wiring
	9.6 Cable	N3 — B11/2 21 — Ω — 2	Ignition: **OFF** Coupling at temperature sensor (B11/2) disconnected	< 1 Ω	Open circuit in wiring
	9.7 Cable	B11/2 ⊥ — Ω — 3	Ignition: **OFF** Coupling at temperature sensor (B11/2) disconnected	< 1 Ω	Open circuit in wiring
	9.8 Cable	N1/2 — B11/2 1 — Ω — 1	Ignition: **OFF** Coupling at temperature sensor (B11/2) disconnected	< 1 Ω	Open circuit in wiring

[1] see section "p".

On/off ratio readout in %	Test step/ Test scope	Test connection	Operation/ Requirement	Specification	Possible cause/Remedy
40	10.0 Air flow sensor position indicator (B2)	B2 1 — Ω — 3	Ignition: **OFF** Coupling at air flow sensor position indicator (B2) disconnected	3.6–4.4 kΩ	Air flow sensor position indicator (B2)
		1 — Ω — 2	Slowly deflect air flow sensor plate by hand	Ohms value rises continuously up to approx. 2/3 of deflection and then drops off again	
	10.1 Cable	N3 B2 7 — Ω — 1	Ignition: **OFF** KE control unit (N3) disconnected	< 1 Ω	Open circuit in wiring
	10.2 Cable	N3 B2 18 — Ω — 3	Ignition: **OFF** KE control unit (N3) disconnected	< 1 Ω	Open circuit in wiring
	10.3 Cable	N3 B2 17 — Ω — 2	Ignition: **OFF** KE control unit (N3) disconnected	< 1 Ω	Open circuit in wiring

On/off ratio readout in %	Test step/ Test scope	Test connection	Operation/ Requirement	Specification	Possible cause/Remedy
40	11.0 Acceleration enrichment	set to A Y1 2 —(←(A)→)— 1	Ignition: **OFF** Connect test cable 102 589 04 63 00 to actuator (Y1) Unplug coupling from coolant temperature sensor (B11/2) Coupling with resistance decade to 2.5 kΩ, between contacts 2 and 4-pin temperature sensor (equals approx. 20°C) [1] KAT: Unplug connector G3/2×2 (oxygen sensor) Engine: **start** Engine runs at fast idle speed	>15 mA	Test air flow sensor position indicator (B2) (10.0–10.3)
	11.1		Increase engine speed sharply	Current value must rise	Test air flow sensor position indicator (B2) (10.0–10.3)

[1]) On model 129: two resistance decades: contact 1 – contact 3, contact 2 – contact 4.

On/off ratio readout in %	Test step/ Test scope	Test connection	Operation/ Requirement	Specification	Possible cause/Remedy
50	12.0 Fault circuit oxygen sensor (G3/2) [1]	N3 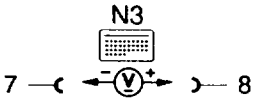 7 — 8	Engine: **idling**	Fluctuates between 0.1–0.9 V	Oxygen sensor (G3/2), Open circuit in wiring KE resistance trimming plug (R17), Mixture setting, KE control unit (N3)
	12.1 Insulation oxygen sensor cable	N3 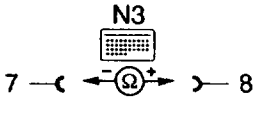 7 — 8	Ignition: **OFF** KE control unit (N3) and coupling (G3/2 × 1) disconnected	∞	Open circuit in wiring
	12.2 Oxygen sensor (G3/2)	N3 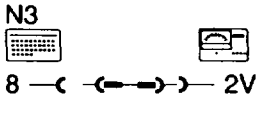 8 — 2V	Engine: **idling**, Lambda control tester connected, coupling (G3/2 × 1) connected	moves toward 0–10% at	Oxygen sensor (G3/2)
	12.3 KE control unit (N3)	N3 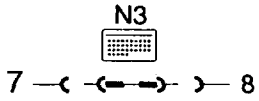 7 — 8	Engine: **idling**, Lambda control tester connected, coupling (G3/2 × 1) disconnected	moves toward 90–100% at	KE control unit (N3), Open circuit in wiring
	12.4 Cable	G3/2 × 1 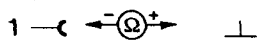 1 — ⊥	Ignition: **OFF** Coupling (G3/2x1) disconnected	< 1 Ω	Open circuit in wiring

[1]) Drive vehicles of model 129 onto workshop platform or inspection pit.

On/off ratio readout in %	Test step/ Test scope	Test connection	Operation/ Requirement	Specification	Possible cause/Remedy
	12.5 Cable	G3/2 x 1 — G3/2 1 — 1	Ignition: **OFF** Coupling (G3/2x1) disconnected		Open circuit in wiring, Overvoltage protection (K1 or K1/1), test steps 3.0 to 3.2, Fuel pump relays (N16/1 to N16/4)
		G3/2 — G3/2x1 2 — 2	Engine: **start**	0.5–1.3 A	
50	12.6 Oxygen sensor heater	**Engine 103.984** N16 20 — 1	Ignition: **OFF** Engine systems control unit (N16) disconnected, Coupling (G3/2 x 1) disconnected	0.5–1.7 A	Oxygen sensor (G3/2), Open circuit in wiring (see section "j" test step 11.0)
	12.7 Cable	N16 G3/2 x 1 2 — 20	Ignition: **OFF** Engine systems control unit (N16) disconnected, Coupling (G3/2 x 1) disconnected	< 1 Ω	Open circuit in wiring
	12.8 Cable	G3/2 x 1 — W16 1 — ⊥	Ignition: **OFF** Coupling (G3/2 x 1) disconnected	< 1 Ω	Open circuit in wiring

On/off ratio readout in %	Test step/ Test scope	Test connection	Operation/ Requirement	Specification	Possible cause/Remedy
60	13.0 Road speed signal	**Mod. 124, 201, 129** N3 2 — 6 **Mod. 107, 126** N3 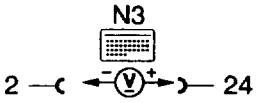 2 — 24	Ignition: **ON** **Mod. 107,126, 129:** Run vehicle on dynamometer (>20 km/h) **Mod. 124, 201** roll vehicle approx. 1 m	Models 124, 201 Readout fluctuates 0–12 V w/o ancillaries 0–9 V with ancillaries Models 107, 126, 129 >1 V	Models 124, 201 Hall-effect sensor (B6), Open circuit in wiring Models 107, 126, 129 Electronic speedometer, Open circuit in wiring Test see Group 54
	13.1 KE control unit (N3)	connect to (X11)	Run vehicle in 3rd gear/ Drive mode 3 on road/dynamometer, accelerate fully at approx. 2000 /min (approx. 6 sec)	On/off ratio fluctuates after accelerator released	Readout 60%: Replace KE control unit (N3)
	13.2 Cable	**Models 124, 201 with multiple plug connection** N3 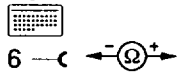 X53/5 6 —	Ignition: **Off** Unplug X53/5x	<1 Ω	Open circuit in wiring

On/off ratio readout in %	Test step/ Test scope	Test connection	Operation/ Requirement	Specification	Possible cause/Remedy
	13.3 Cable	**Models 124, 201 without multiple plug connection** 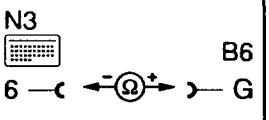	Ignition: **OFF** Coupling at Hall-effect sensor (B6) disconnected	< 1 Ω	Open circuit in wiring
	13.4 Cable	**Models 107, 126** 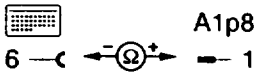 **Model 129** 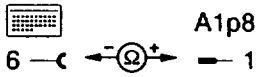	Connector (A1p8) unplugged	< 1 Ω	Open circuit in wiring Test see Group 54
60	14.0 Hall-effect road speed sensor (B6)	**Models 124** [1]**, 201** 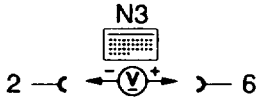	Ignition: **ON** Coupling at KE control unit (N3) unplugged, roll vehicle approx 1 m	Readout fluctuates 0–12 V	Hall-effect sensor (B6), Open circuit in wiring
	14.1 Cable		Ignition: **OFF**	< 1 Ω	Open circuit in wiring
	14.2 Cable	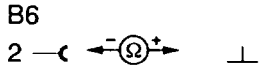	Ignition: **OFF**	< 1 Ω	Open circuit in wiring
	14.3 Cable	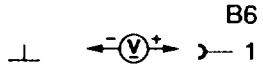	Ignition: **ON**	11–14 V	Fuse, Open circuit in wiring

[1]) except engine 103.980 Std., engine 103.982/983 as of approx. 09/87

On/off ratio readout in %	Test step/ Test scope	Test connection	Operation/ Requirement	Specification	Possible cause/Remedy
70	15.0 TD/TN signal	**Models 107, 124, 126, 201** N3 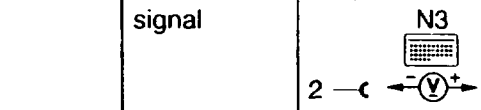 2 — 25	Ignition: **ON** Engine idling at operating temperature, KE control unit (N3) connected	6–12 V	EZL ignition control unit (N1/2), contact assignment see section "k", Open circuit in wiring
	15.1 Cable	N3 N16/3 10 — 25	Ignition: **OFF** Fuel pump relay (N16/3 or N16/4) removed	<1 Ω	Open circuit in wiring
	15.2 Cable	N16/3 X11 10 — 1	Ignition: **OFF**	<1 Ω	Open circuit in wiring
	15.3 Cable	X11 N1/2 TD/TN 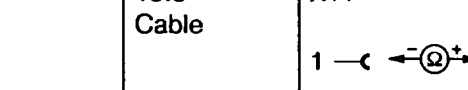 1 —	Ignition: **OFF**	<1 Ω	Open circuit in wiring
70	16.0 TDA signal	**Engine 103.984** N3 2 — 25	Engine: **idling** at operating temperature, KE control unit (N3) connected	6–12 V	EZL ignition control unit (N1/2), contact assignment see section "k", Engine systems control unit (N16), Open circuit in wiring
	16.1 TD signal	N16 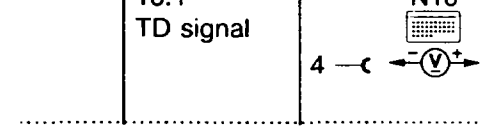 4 — 16	Ignition: **ON** Engine idling	6–12 V	EZL ignition control unit (N1/2), Open circuit in wiring

On/off ratio readout in %	Test step/ Test scope	Test connection	Operation/ Requirement	Specification	Possible cause/Remedy
	16.2 Cable (TDA)	N3 — N16 25 — Ω — 11	Ignition: **OFF**	< 1 Ω	Open circuit in wiring
	16.3 Cable (TD)	N1/2 — N16 TD — Ω — 16	Ignition: **OFF** Connector (N1/2) unplugged	< 1 Ω	Open circuit in wiring
80	17.0 Fault circuit intake air temperature sensor (B17/2)	N3 7 — V — 11	Engine: **idling**, KE control unit (N3) connected	At +20°C 1.32–1.62 V, other values see table temperature sensor (B17/2)	Intake air temperature sensor (B17/2), Open circuit in wiring
	17.1 Intake air temperature sensor (B17/2)	B17/2 — B17/2 3 — Ω — 2	Ignition: **OFF** Coupling at temperature sensor (B17/2) disconnected	See diagram temperature sensor (B17/2)	Intake air temperature sensor (B17/2)
	17.2 Cable	N3 — B17/2 11 — Ω — 3	Ignition: **OFF** Coupling at temperature sensor (B17/2) disconnected	< 1 Ω	Open circuit in wiring

On/off ratio readout in %	Test step/ Test scope	Test connection	Operation/ Requirement	Specification	Possible cause/Remedy
	17.3 Cable	N3 B17/2 7 — 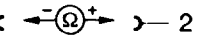 — 2	Ignition: **OFF** Coupling at temperature sensor (B17/2) disconnected	< 1 Ω	Open circuit in wiring
90	Not assigned	–	–	–	–
95	18.0 Decel fuel shutoff	–	–	–	See section "m" test steps 1.0–1.3
100 [1]	19.0				See test steps 1, 2, 3, 11. Test on/off ratio, RI 07.3-2053
–	20.0 Start valve (Y8) Actuation via fuel pump relay	Y8 1 — — 2	Connect ohms decade with 10 kΩ into circuit at coolant temperature sensor (B11/2), Unplug cape of position sensor at EZL ignition control unit (N1/2), Engine: **start**	approx. 10 V during starting	Fuel pump relays (N16/3 or N16/4) **Model 129:** Engine systems control unit (N16), Open circuit in wiring Terminal 50
	20.1 Start valve (Y8) Resistance	Y8 1 — — 2	Ignition: **OFF** Coupling at start valve (Y8) disconnected	10–25 Ω	Start valve (Y8)
	20.2 Cable	Y8 ⊥ 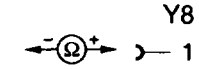 — 1	Ignition: **OFF** Coupling at start valve (Y8) disconnected	< 1 Ω	Open circuit in wiring

[1] Idle speed too high.

On/off ratio readout in %	Test step/ Test scope	Test connection	Operation/ Requirement	Specification	Possible cause/Remedy
	20.3 Cable	N16/3 Y8 4 — Ω — 2	Ignition: **OFF** Coupling at start valve (Y8) disconnected	< 1 Ω	Open circuit in wiring
	20.4 Cable	N16/3 N3 2 — Ω — 9	Ignition: **OFF** Coupling at start valve (Y8) disconnected	< 1 Ω	Open circuit in wiring
50	21.0 Operation of oxygen sensor heater	G3/2x1 1 — A — 1	Oxygen sensor operating temperature Engine: **idling** Do not read off specification until stable	1.0–1.8 A	Voltage and ground supply for oxygen sensor relay (K35), Oxygen sensor relay (K35) faulty, Oxygen sensor faulty
50	22.0 Voltage supply oxygen sensor relay (K35) [1]	K35 ⊥ — V — 4	Oxygen sensor relay (K35) removed, Engine: **idling**	11–14 V	Open circuit in wiring, Oxygen sensor relay (K35), Fuel pump relay and kickdown cutoff (N16/4) faulty
	22.1 Voltage supply oxygen sensor relay (K35)	K35 ⊥ — V — 3	Oxygen sensor relay (K35) removed, Ignition: **ON**	11–14 V	**Model 124** Fuse 7 faulty, Oxygen sensor relay (K35), Open circuit in wiring **Model 201** Fuse 10 faulty, Oxygen sensor relay (K35), Open circuit in wiring

[1] K17/3, K35 on model 124, 201 (CH) (DK) (N) (S) (SF) as of 1991

On/off ratio readout in %	Test step/ Test scope	Test connection	Operation/ Requirement	Specification	Possible cause/Remedy
50	23.0 Ground, oxygen sensor relay (K35)	K35 G1 5 — (V) — +	Oxygen sensor relay (K35) disconnected, Ignition: **OFF**	11–14 V	Open circuit in wiring, Oxygen sensor relay (K35), Ground (W3)
50	24.0 Cable of oxygen sensor relay (K35) to plug connection of oxygen sensor heating coil (G3/2x1)	K35 G3/2x1 1 — (Ω) — 2	Oxygen sensor relay (K35) disconnected	<1 Ω	Open circuit in wiring
–	25.0 Actuation of shiftpoint retard solenoid valve (Y3/2)	⊥ — (V) — Y3/2	Coolant temperature sensor disconected, simulate +20°C with 2.5 kΩ. Engine: **idling**	11–14 V approx. 80 s	Voltage and ground supply for air injection/transmission shift point retard relay (K17/3), Air injection/transmission shift point retard relay (K17/3) faulty, Open circuit in wiring, No coolant temperature signal Wiring diagrams transmission shiftpoint retard/air injection see M103, Combustion III, 14–7165
–	26.0 Voltage supply air injection/ transmission shift point retard relay (K17/3) [1]	⊥ — (V) — K17/3 4	Air injection/ transmission shift point retard relay (K17/3) removed Ignition: **ON**	11–14 V	7-pin overvoltage protection relay 87E (K1/1), Air injection/transmission shift point retard relay

[1] K17/3, K35 on model 124, 201 (CH) (DK) (N) (S) (SF) as of 1991

On/off ratio readout in %	Test step/ Test scope	Test connection	Operation/ Requirement	Specification	Possible cause/Remedy
	26.1	K17/3 ⊥ —(V)— 3	Air injection/ transmission shift point retard relay (K17/3) removed, Ignition: **ON**	11–14 V	**Model 124** Fuse 2 faulty, Open circuit/short circuit air injection/transmission shift point retard relay (K17/3), Open circuit in wiring **Model 201** Fuse 7 faulty, Open circuit/short circuit air injection/transmission shift point retard relay (K17/3), Open circuit in wiring
	27.0 Ground supply of air injection/ transmission shift point retard relay (K17/3)	K17/3 + 5 —(V)—	Air injection/ transmission shift point retard relay (K17/3) removed, Ignition: **ON**	11–14 V	Open circuit in wiring, Air injection/transmission shift point retard relay (K17/3), KE injection system control unit (N3) faulty, No ground output via contact 14. Test ground signal with contact box
	28.0 Cable to shift point retard solenoid valve (Y3/2)	K17/3 1 — 4 W11 Y3/2 ⊥ —(V)—	Air injection/ transmission shift point retard relay (K17/3) removed, Ignition: **ON**	11–14 V	Open circuit in wiring, Air injection/transmission shift point retard relay (K17/3), Coupling of shiftpoint retard solenoid valve (Y3/2)

On/off ratio readout in %	Test step/ Test scope	Test connection	Operation/ Requirement	Specifi-cation	Possible cause/Remedy
	28.1 Shiftpoint retard solenoid valve (Y3/2)	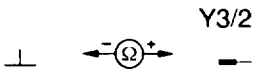 Y3/2	Coupling at shift point retard solenoid valve disconnected, Ignition: **OFF**	10–18 Ω	Replace shift point retard solenoid valve (Y3/2)

j. Test program of engine systems control unit MAS with contact box engine 103.984 in model 129

Pulse readout	Test step/ Test scope	Test connection	Operation/ Requirement	Specification	Possible cause/Remedy
–	1.0 Engine systems control unit MAS (N16) Ground	N3 X4/10 4 — tml.30	Ignition: **OFF**	11–14 V	Open circuit in wiring Ground connection W16
15	2.0 MAS (N16) terminal 30	N16 4 — 1	Ignition: **OFF**	11–14 V	Open circuit in wiring
–	3.0 MAS (N16) terminal 15 unfused	N16 4 — 10	Ignition: **ON**	11–14 V	Open circuit in wiring, Terminal block at fuse and relay box (F1) loose
–	4.0 MAS (N16) terminal 15	N16 4 — 21	Ignition: **ON**	11–14 V	Open circuit in wiring, Relay box (F1) loose
15	5.0 Fuel pumps (M3m1, M3m2) operation	N16 4 — 21	Ignition: **ON** Engine systems control unit (N16) disconnected	11–14 V	Open circuit in wiring, 1-pin plug connection of fuel pump harness (X36), M3m1 or M3m2
2	6.0 Fuel pumps (M3m1, M3m2) actuation MAS	N16 4 — 2	Engine systems control unit (N16) connected. Control cable coupling 2 at EZL control unit (N1/2) disconnected. Engine: **start**	10 ± 2 V during starting	Open circuit in wiring, Relay box (F1) loose

Pulse readout	Test step/ Test scope	Test connection	Operation/ Requirement	Specification	Possible cause/Remedy
9	7.0 Control signal terminal 50	N16 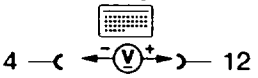 4 — 12	Control cable coupling 2 at EZL control unit (N1/2) disconnected. Engine: **start**	10 ± 2 V during starting	Open circuit in wiring, Relay box (F1) loose
3	8.0 TDA signal	N3 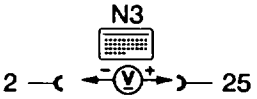 2 — 25	Engine: **idling**	6–12 V	Open circuit in wiring, TD signal implausible [1]
	8.1 Wiring	N3 N16 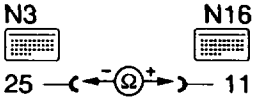 25 — 11	Ignition: **OFF**	< 1 Ω	Open circuit in wiring
3	9.0 TD signal	N16 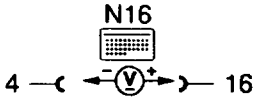 4 — 16	Engine: **idling**	6–12 V	Open circuit in wiring, EZL ignition control unit (N1/2)
	9.1 Engine systems control unit MAS (N16)	N16 4 — 11	Coupling (A) of EZL control unit (N1/2) connected. Engine: **idling**	6–12 V	Engine systems control unit (N16)
	9.2 Cable TD signal	N1/2 N16 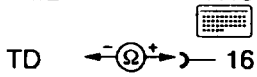 TD — 16	Ignition: **OFF** Coupling (A) of EZL control unit (N1/2) disconnected	< 1 Ω	Open circuit in wiring

[1]) The plausibility of the road speed signal can **only** be checked by the KE control unit (N3) when driving (engine output dynamometer/road). If an implausible road speed signal is recognized when driving, the control unit (N3) "sets" the on/off ratio of 60% and stores this. The fault is not erased until the ignition is switched off. A "60% on/off ratio" test is performed e.g. in dealing with the complaint: jerking when vehicle moving and throttle valve closed.

Pulse readout	Test step/ Test scope	Test connection	Operation/ Requirement	Specification	Possible cause/Remedy
4	10.0 Oxygen sensor cable [1])	N3 G3/2x1 8 — Ω — 3	Ignition: **OFF** KE control unit (N3) and 3-pin plug connection of heated oxygen sensor (G3/2x1) disconnected	< 1 Ω	Open circuit in wiring
	10.1 Oxygen sensor (G3/2)	N3 8 — 2V	Lambda tester connected Engine: **idling** Coupling G3/2x1 disconnected	0–10 % at lambda tester after 30 s	Oxygen sensor G3/2
	10.2 KE control unit (N3)	N3 8 — 6	Lambda tester connected Engine: **idling** Coupling G3/2x1 disconnected	90–100 % at lambda tester after 30 s	KE control unit (N3)
4	11.0 Oxygen sensor heater actuation	N16 4 — V — 20	Engine: **idling**	11–14 V	Open circuit in wiring, KE control unit (N3), Engine systems control unit (N16)
	11.1 Control signal of oxygen sensor heater	N16 4 — V — 18	Engine: **idling**	11–14 V	Open circuit in wiring, KE control unit (N3)

[1]) Drive model 129 onto workshop platform or inspection pit.

Pulse readout	Test step/ Test scope	Test connection	Operation/ Requirement	Specification	Possible cause/Remedy
	11.2 Cable	N3 — N16 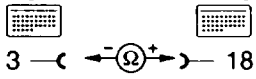 3 — 18	Ignition: **OFF** KE control unit (N3) and engine systems control unit (N16) disconnected.	< 1 Ω	Open circuit in wiring
	11.3 Oxygen sensor heater	N16 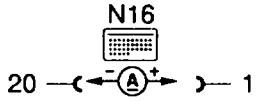 20 — 1	Ignition: **OFF** Engine systems control unit (N16) disconnected. 3-pin plug connection of oxygen sensor (G3/2x1) connected	0.5–1.7 A	Open circuit in wiring, Oxygen sensor (G3/2)
	11.4 Cable [1])	G3/2x1 — N16 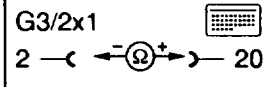 2 — 20	Ignition: **OFF** Engine systems control unit (N16) disconnected. Oxygen sensor plug connection (G3/2x1) disconnected	< 1 Ω	Open circuit in wiring
	11.5 Cable [1])	G3/2x1 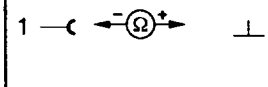 1 — ⊥	Ignition: **OFF** Plug connection G3/2x1 disconnected	< 1 Ω	Open circuit in wiring
11	12.0 Cut-in signal of A/C compressor	N3 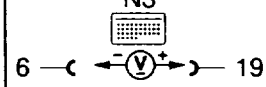 6 — 19	Engine: **idling** Air conditioner **"switch on"**	5–10 V	Open circuit in wiring, Engine systems control unit (N16), Test compressor cutoff

[1]) Drive vehicle onto workshop platform or inspection pit.

Pulse readout	Test step/ Test scope	Test connection	Operation/ Requirement	Specification	Possible cause/Remedy
	12.1 Cable	N16 N3 9 — Ω — 19	Ignition: **OFF** KE control unit (N3) and coupling at compressor cutoff control unit (N6) disconnected	< 1 Ω	Open circuit in wiring
12 13	13.0 A/C compressor actuation	N16 4 — V — 22	Engine: **idling** Air conditioner **"switch on"**	11–14 V	Engine systems control unit (N16)
8	14.0 TF signal (coolant temperature)	N16 4 — V — 13	Engine: **idling**	At +80°C 0.29–0.35 V, other values see table coolant temperature sensor (B11/2)	Coolant temperature sensor (B11/2), KE control unit (N3), Open circuit in wiring
5	15.0 Air pump actuation	N16 4 — V — 19	4-pin coolant temperature sensor coupling (B11/2) disconnected and simulate with 2.5 kΩ [1]) Engine: **idling** Air hose downstream of non-return valve detached	approx. 2 min 11–14 V Perceptible air flow at air hose	Engine systems control (N16) Open circuit in wiring, Air pump, Air hose

[1]) Two resistance decades: contact 1 – contact 3, contact 2 – contact 4.

Pulse readout	Test step/ Test scope	Test connection	Operation/ Requirement	Specification	Possible cause/Remedy
5	16.0 Air injection control signal	N16 17 — 21	4-pin coolant temperature sensor coupling (B11/2) disconnected and simulate with 2.5 kΩ [1]) Engine: **idling**	For approx. 2 min 11–14 V	Open circuit in wiring, KE control unit (N3)
	16.1 Cable	N3 N16 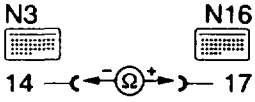 14 — 17	Ignition: **OFF** KE control unit (N3) and engine systems control unit (N16) disconnected	<1 Ω	Open circuit in wiring
6	17.0 Fault circuit kickdown cutoff	N16 7 — 1	Ignition: **OFF** Engine systems control unit (N16) disconnected. Kickdown switch (S16/6) or second mode kickdown switch (S16/7) operated	450 ± 50 mA [2]) 850 ± 50 mA [2])	Open circuit in wiring, S16/6 or S16/7, Automatic transmission kickdown valve (Y3)

[1]) Two resistance decades: contact 1 – contact 3, contact 2 – contact 4.

[2]) Test data of switchover valve depending on manufacturer.

Pulse readout	Test step/ Test scope	Test connection	Operation/ Requirement	Specification	Possible cause/Remedy
10	18.0 Actuation of engine systems control unit MAS (N16)	N16 4 — V — 12	Connect ohms decade with 10 kΩ to coolant temperature sensor (B11/2), unplug cable from position sensor at EZL control unit (N1/2), operate starter	approx. 10 V when starting	Engine systems control unit (N16), Open circuit in wiring Terminal 50
	18.1 Start valve (Y8) Resistance	Y8 1 — Ω — 2	Ignition: **OFF** Coupling at start valve (Y8) disconnected	10–25 Ω	Start valve (Y8)
	18.2 Cable	Y8 ⊥ — Ω — 1	Ignition: **OFF** Coupling at start valve (Y8) disconnected	<1 Ω	Open circuit in wiring
	18.3 Cable	N16 Y8 8 — Ω — 2	Ignition: **OFF** Coupling at start valve (Y8) disconnected	<1 Ω	Open circuit in wiring
	18.4 Cable	N16 N3 13 — Ω — 9	Ignition: **OFF** Coupling at start valve (Y8) disconnected	<1 Ω	Open circuit in wiring

k. Contact assignement of EZL control unit (N1/2)

Models 107, 124, 126, 201

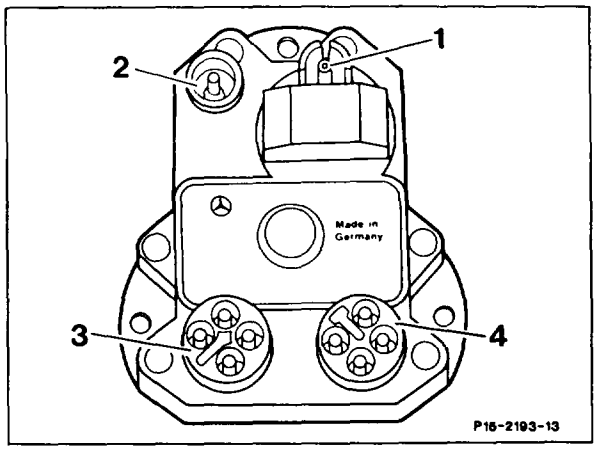

1 Vacuum connection
2 Coaxial connector for control cable from position sensor
3 4-pin sensor connector
  1 Coolant temperature sensor
  2 Throttle valve switch
  3 EZL resistance trimming plug
  4 Vacant (cable ends in harness)
4 4-pin supply connector
  15 = Terminal 15
  16 = Ignition coil terminal 1
  TD = TD signal
  31 = Ground

Model 129

The cable from the EZL control unit (N1/2) connector B, contact 4, is connected to ground W3 on vehicles with automatic transmission in order to detect activation of the respective ignition map.

On vehicles with manual transmission the cable ends in the wiring harness.

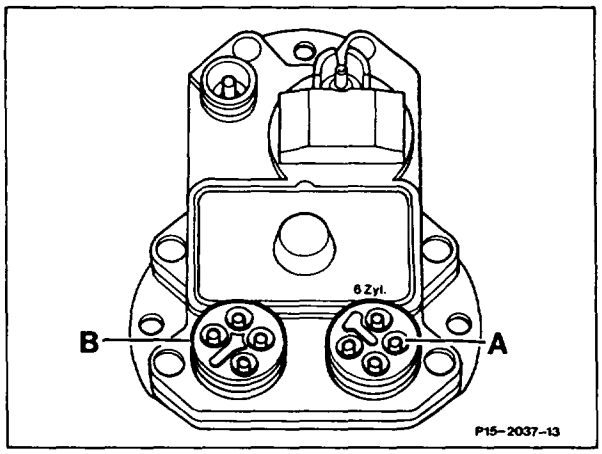

A 4-pin supply connector
  15 = Terminal 15
  16 = Ignition coil terminal 1
  TD = TD signal
  31 = Ground
B 4-pin sensor connector
  1 Coolant temperature sensor
  2 Throttle valve switch
  3 EZL resistance trimming plug
  4 Vacant (cable ends in harness)

I. Table of voltage values of EZL/KE coolant temperature sensor (B11/2) and KE intake air temperature sensor (B17/2)

Temperature (°C)	Resistance (kΩ)	Voltage at contact 21 coolant (V)	Voltage at contact 11 intake air (V)
–20	15.7	3.2–3.9	2.8–3.5
–10	9.2	2.8–3.5	2.5–3.1
0	5.9	2.4–2.9	2.1–2.6
10	3.7	1.9–2.4	1.7–2.1
20	2.5	1.5–1.8	1.3–1.6
30	1.7	1.2–1.4	1.0–1.3
40	1.18	0.9–1.1	0.8–0.9
50	0.84	0.7–0.8	0.6–0.7
60	0.60	0.5–0.6	0.4–0.5
70	0.435	0.4–0.5	0.3–0.4
80	0.325	0.3–0.4	0.2–0.3
90	0.247	0.2–0.3	0.1–0.2

Diagram of temperature sensors
Resistances of EZL/KE coolant temperature sensor (B11/2) and KE intake air temperature sensor (B17/2).

Note
Since 08/88 specification at 80°C: 290–350 Ω.

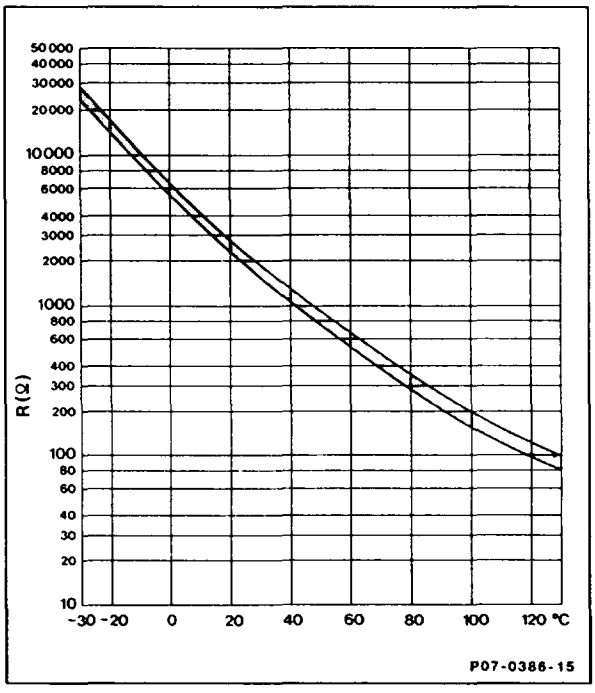

m. Testing decel fuel shutoff

Pulse readout in %	Test step/ Test scope	Test connection	Operation/ Requirement	Specification	Possible cause/Remedy
–	1.0 Decel fuel shutoff	connect to diagnostic socket (X11)	Increase engine speed to approx. 3500/min then close throttle valve	On/off ratio jumps briefly to 50%	Accelerator control setting, Throttle valve switch setting, Microswitch (S27/2), Open circuit
	1.1 Microswitch (S27/2) (vehicle without ASR)	N3 24 — Ω — 2	Idle position Accelerator depressed	< 1 Ω ∞	Microswitch, Open circuit in wiring Microswitch, Open circuit in wiring
	1.2 Idle switching signal (vehicle with ASR)	N3 24 — Ω — 2	Ignition: **ON** Depress accelerator once, measure in idle position	< 1 Ω	Position sensor (R25), Electronic accelerator pedal control unit (N4/1), see group 30
	1.3 Current at electro-hydraulic actuator (Y1)	set to A Y1 2 — A — 1	Ignition: **OFF** Connect test cable 102 589 04 63 00 to actuator (Y1) Ignition: **ON** Increase engine speed to 2000 to 2500/min then close throttle valve	 approx. – 60 mA until combustion restored	 Road speed signal, see 60%

n. **Testing KE resistance trimming plug (R17)**

Connection diagram of contact box, see section "g".

⚠

The KE resistance trimming plug must be re-sealed with the lead seal pliers 124 589 01 37 00 and the embossing set 124 589 24 63 00 after being installed.

Pulse readout in %	Test step/ Test scope	Test connection	Operation/ Requirement	Specification	Possible cause/Remedy
–	1.0 KE resistance trimming plug (R17) [1]	N3 7 — (V) — 22	Ignition: **ON** Engine idling	2.81 V in position 1, other values see table	KE resistance trimming plug (R17), Open circuit in wiring
	1.1 Cable [1]	N3 7 — (Ω) — 22	Ignition: **OFF**	953 Ω in position 1, other values see table	KE resistance trimming plug (R17), Open circuit in wiring
	1.2 Cable [1]	N3 — R17 7 — (Ω) — 8	Ignition: **OFF**	<1 Ω	Open circuit in wiring
	1.3 Cable [1]	N3 — R17 22 — (Ω) — 1 **Model 129** N3 — R17 22 — (Ω) — 4	Ignition: **OFF**	<1 Ω	Open circuit in wiring
	2.0 KE resistance trimming plug (R17) [2]	N3 7 — (V) — 22	Ignition: **ON** Engine idling	0.33 V ±0.1 in position 1, other values see table	KE resistance trimming plug (R17), Open circuit in wiring

[1] Only KAT.

[2] Only RÜF or Standard, without KAT.

Pulse readout in %	Test step/ Test scope	Test connection	Operation/ Requirement	Specification	Possible cause/Remedy
	2.1 Cable [1])	N3 7 — 22	Ignition: **OFF**	51 Ω in position 1, other values see table	KE resistance trimming lug (R17), Open circuit in wiring
	2.2 Cable [1])	N3 R17 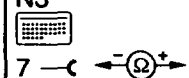 7 — 1	Ignition: **OFF**	< 1 Ω	Open circuit in wiring
	2.3 Cable [1])	N3 R17 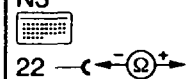 22 — 8	Ignition: **OFF**	< 1 Ω	Open circuit in wiring

[1]) Only RÜF or Standard, without KAT.

Table of test values of KE resistance trimming plug (R17), KAT

Item no.	Voltage (V) ± 0.1	Resistance ± 10%	Fault
1	2.81	953 Ω	none (original state)
2	3.16	1.27 kΩ	–
3	3.43	1.62 kΩ	–
4	3.77	2.26 kΩ	slight pickup faults in warming-up phase
5	4.10	3.32 kΩ	poor throttle response when cold
6	4.40	5.36 kΩ	poor throttle response and response in warming-up phase
7	4.72	11.5 kΩ	very poor throttle response when cold driving faults in warming-up phase

Table of test values of KE resistance trimming plug (R17), RÜF/without KAT/Standard

Item no.	Voltage (V) ± 0.1	Resistance (Ω) ± 10%	Fault
1	0.33	51	none (original state)
2	0.61	105	excessive part load consumption when engine at operating temperature
3	0.92	169	pickup faults when engine at operating temperature
4	1.26	249	slight pickup faults in warming-up phase
5	1.61	348	poor throttle response when cold
6	1.88	442	poor throttle response and pickup faults in warming-up phase
7	2.22	590	very poor throttle response when cold driving faults in warming-up phase

o. Testing part load mixture adaptation (nly RÜF or Std., without KAT)

Connection diagram of contact box, see section "g".

Pulse readout in %	Test step/ Test scope	Test connection	Operation/ Requirement	Specification	Possible cause/Remedy
–	1.0 Part load mixture adaptation	set to A Y1 1 — (A) — 2	Ignition: **OFF** Connect test cable 102 589 04 63 00 to actuator (Y1) Ignition: **ON** Engine speed 2500 /min	– 7 to + 4 mA	KE resistance trimming plug (R17), Open circuit in wiring

p. Test setup of 4-pin coolant temperature sensor (B11/2)

4-pin coolant temperature sensor (B11/2)

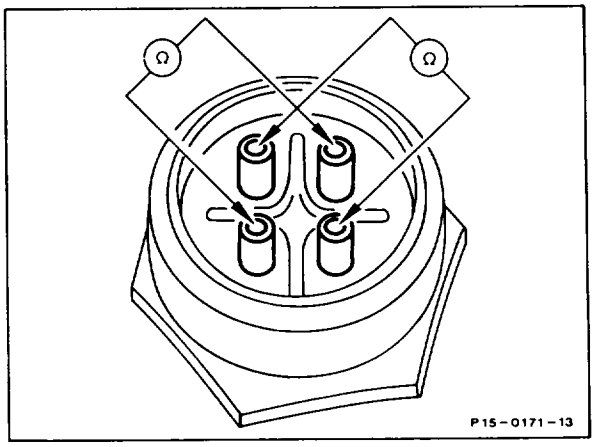

4-pin coolant temperature sensor coupling (B11/2)

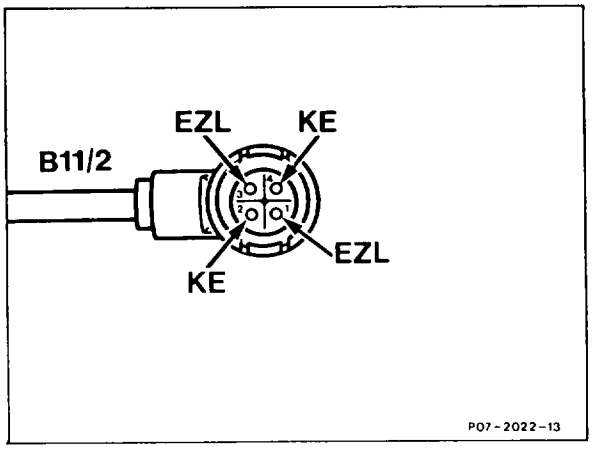

q. Location of plug connection Model 107

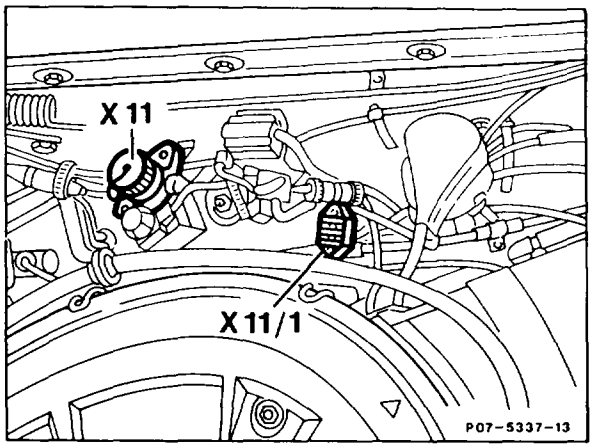

X11 Diagnostic socket/terminal block terminal TD
X11/1 Diagnostic socket/terminal block terminal 30/KE, 2-pin

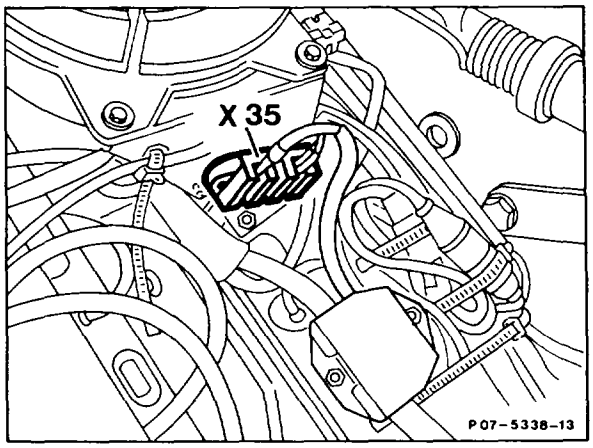

X35 (X4/10) Terminal block terminal 30/terminal 61 (battery)

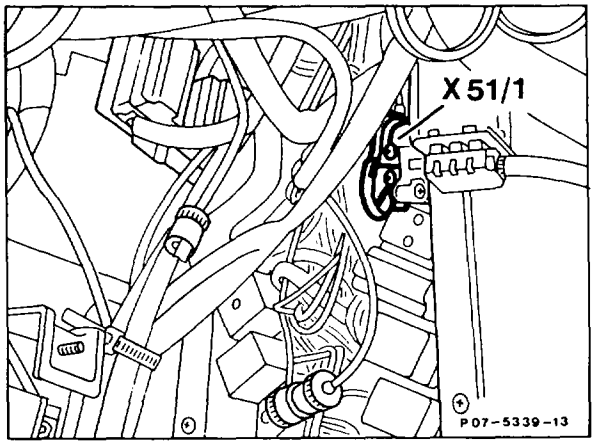

X51/1 Terminal block terminal 87/terminal 30, 2-pin

X4 Terminal block terminal 30, fuse and relay box, 2-pin
X4/1 Terminal block terminal 30, interior, 2-pin

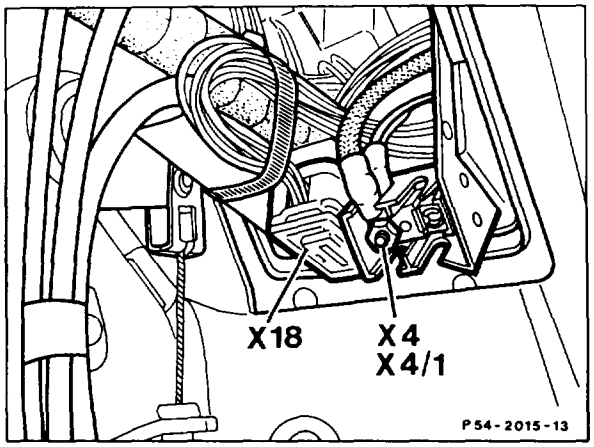

X11 Diagnostic socket/terminal block terminal TD

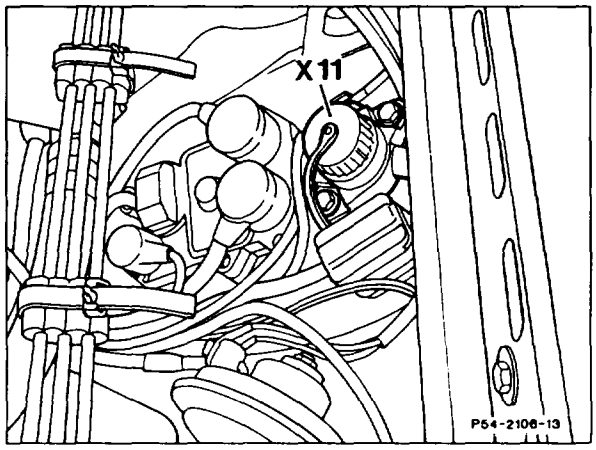

X26 Plug connection, interior, engine (in fuse box)

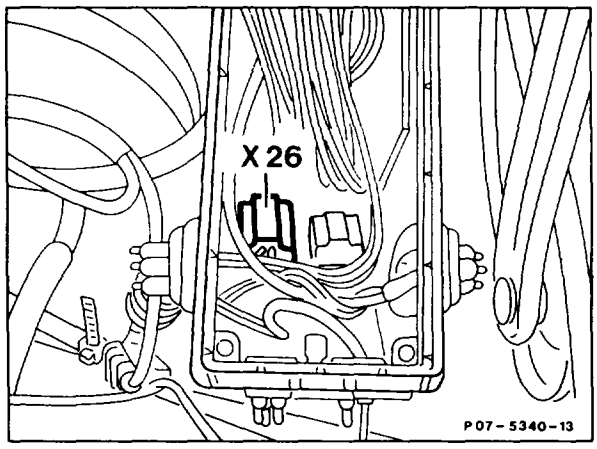

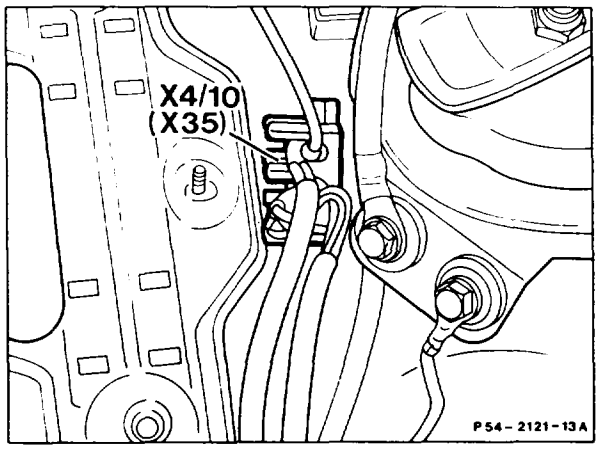

X4/10 Terminal block terminal 30/terminal 61
(X35) (battery)

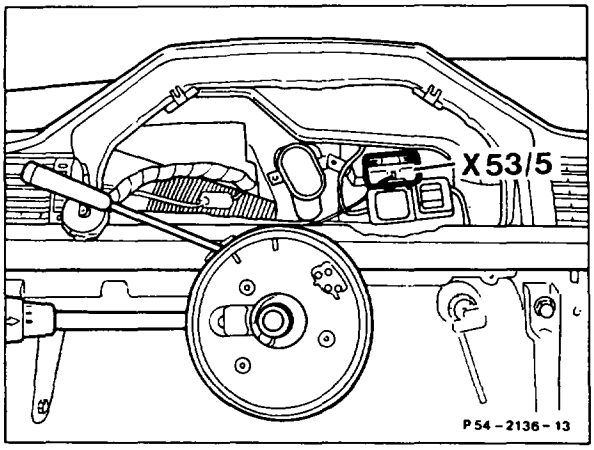

X53/5 Multi-point plug connection/Hall-effect sensor

Model 126

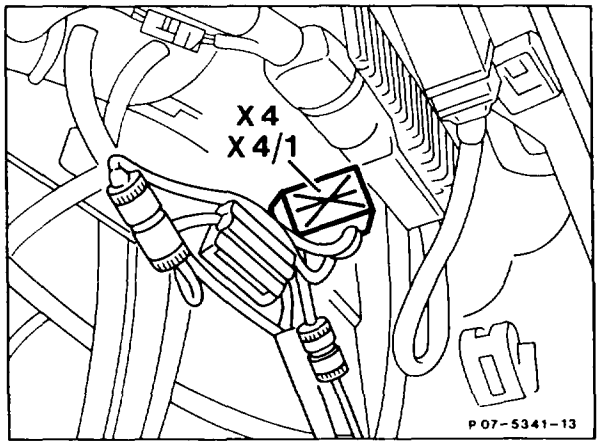

X4 Terminal block terminal 30, fuse and relay box, 2-pin
X4/1 Terminal block terminal 30, interior, 2-pin

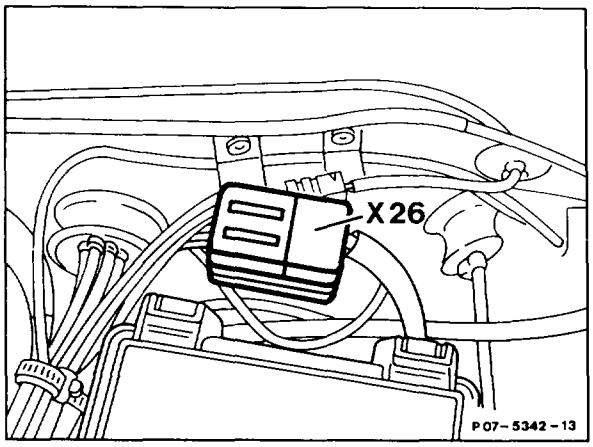

X26 Plug connection, interior, engine (in fuse box)

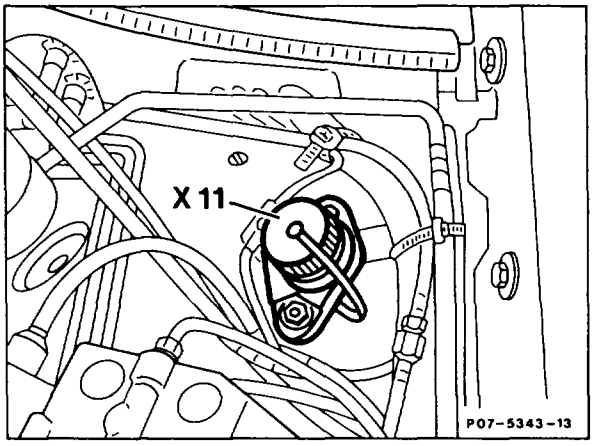

X11 Diagnostic socket/terminal block terminal TD

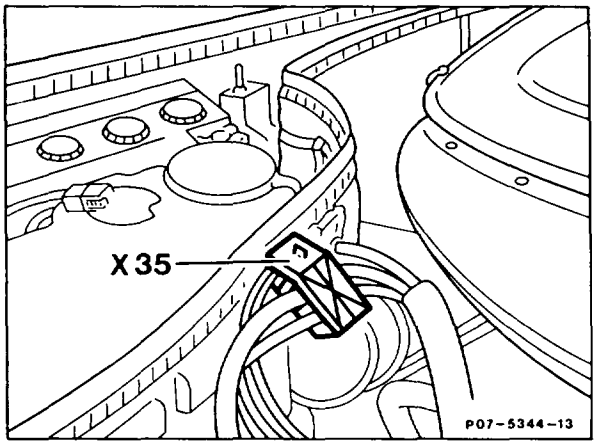

X35 Terminal block terminal 30/terminal 61 (X4/10) (battery)

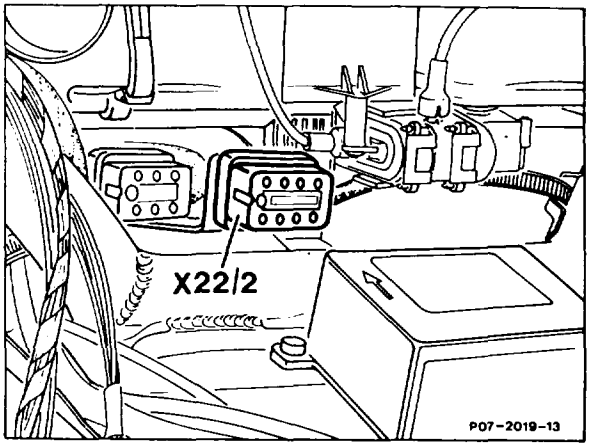

X22/2 Plug connection, automatic transmission/engine, 8-pin, behind radio

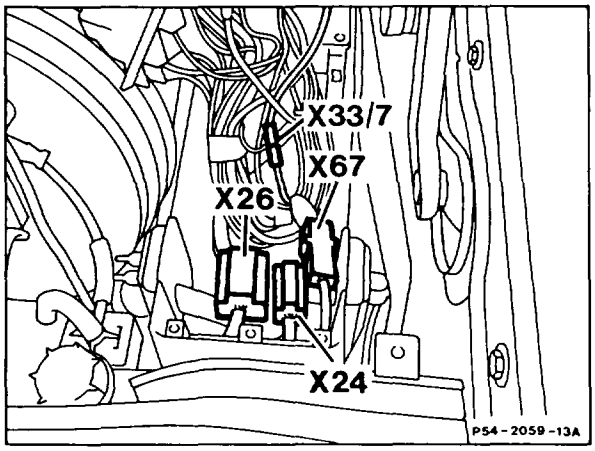

X24 Plug connection, headlight harness, 8-pin
X26 Plug connection, interior, engine (in fuse box)
X67 Plug connection, outside temperature display, 2-pin

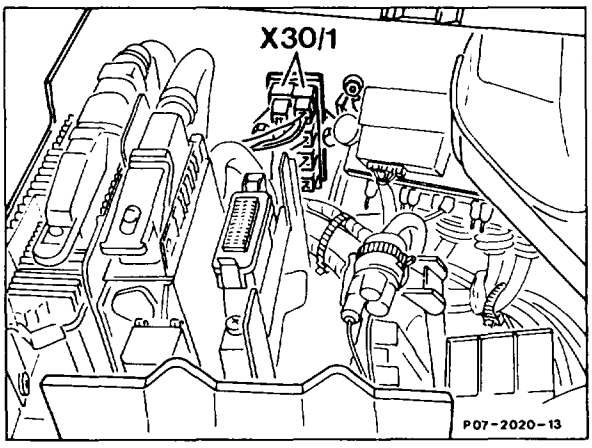

X30/1 Plug connection, multi-function block (in component compartment)

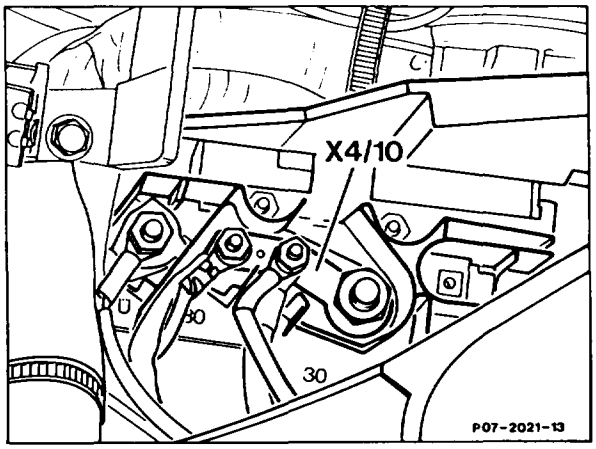

X4/10 Terminal block terminal 30/30Ue/61e/87L (in component compartment)

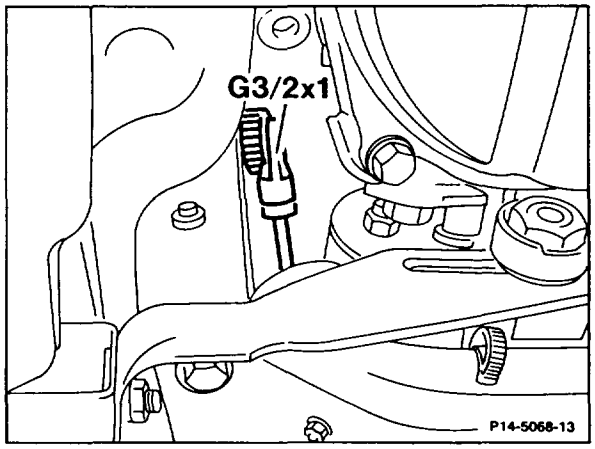

G3/2x1 Oxygen sensor plug connection

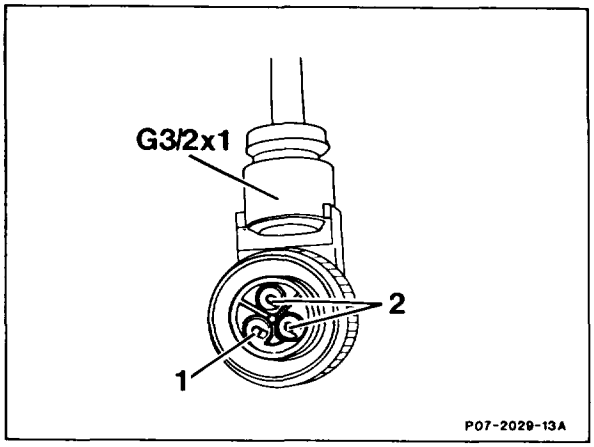

G3/2x1 Oxygen sensor plug connection
1 Oxygen sensor signal
2 Oxygen sensor heater

The microswitch (S27/2) is not fitted to vehicles with ASR. The cable is tied back in the harness. The signal for the decel fuel shutoff is formed by the position sensor (R25) and input into the KE control unit via the electronic accelerator pedal control unit. The separation point between the control units is the plug connection (X89/4).

X89/4 Plug connection, electronic accelerator pedal control unit/KE control unit

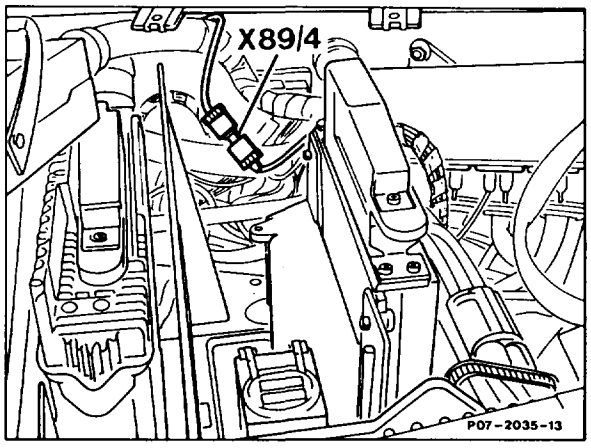

Model 201

X4/10 Terminal block terminal 30/terminal 61 (battery)

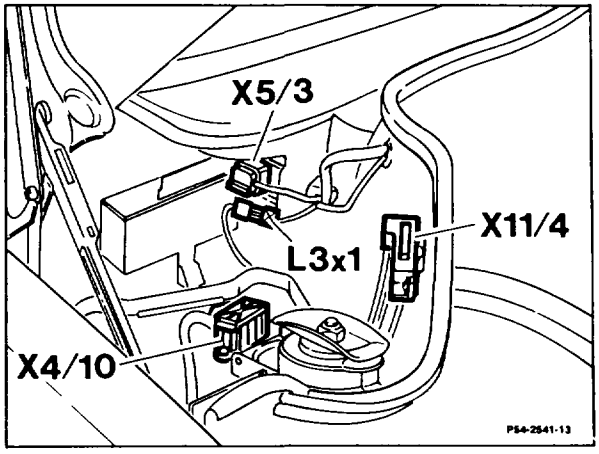

X11 Diagnostic socket/terminal block terminal TD

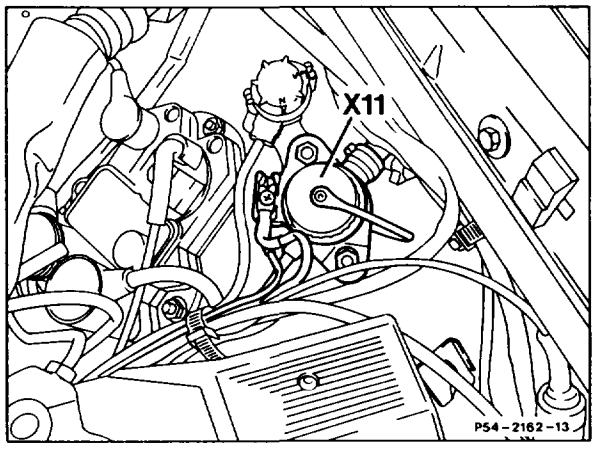

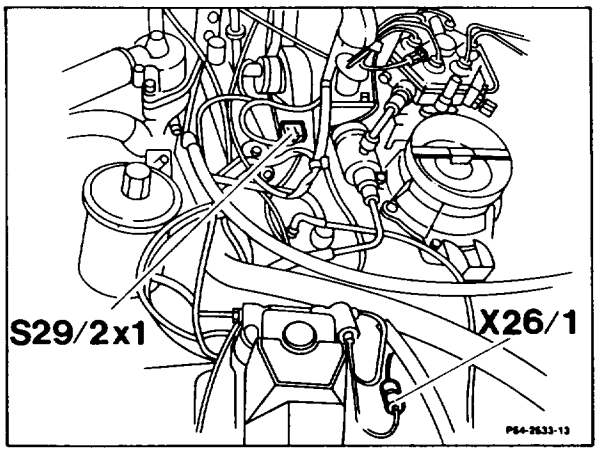

X26/1 Plug connection, engine wiring harness/ headlight harness, diagnosis, 1-pin

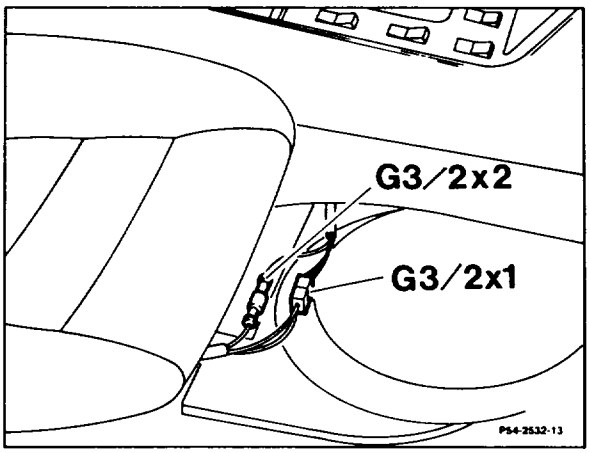

G3/2x1 Plug connection, oxygen sensor heating coil
G3/2x2 Plug connection, oxygen sensor signal

r. Location of ground points
Model 107

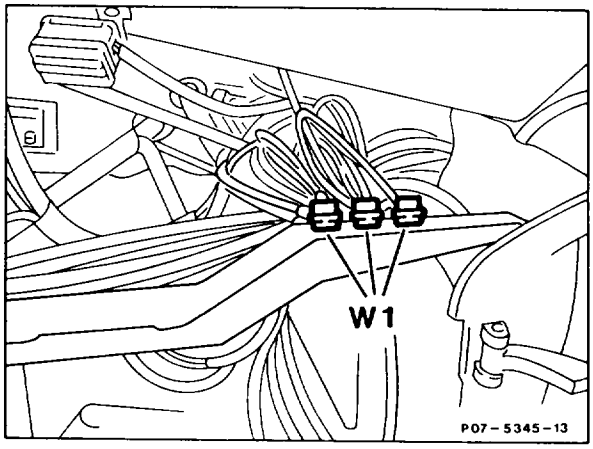

W1 Main ground (right cross member)

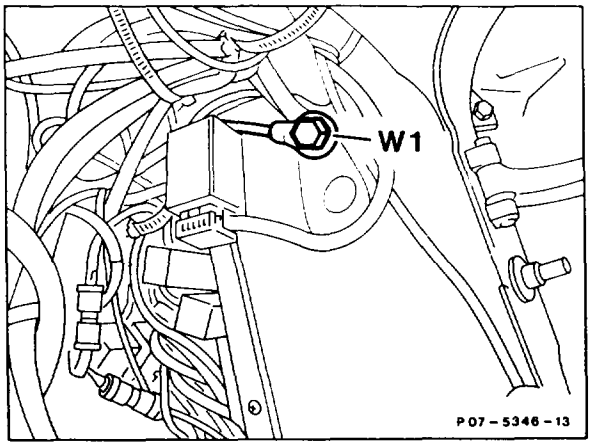

W1 Main ground (right footwell)

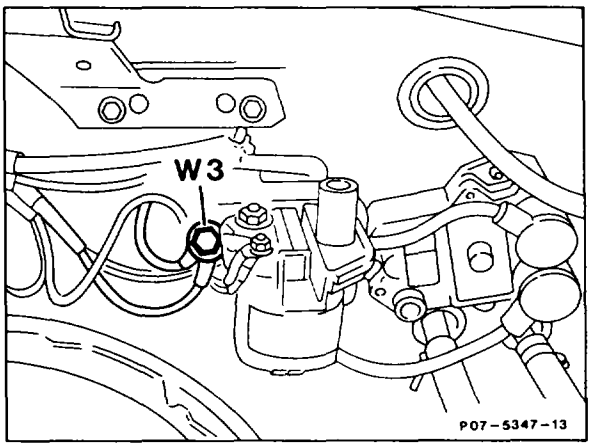

W3 Ground, front left (ignition coil)

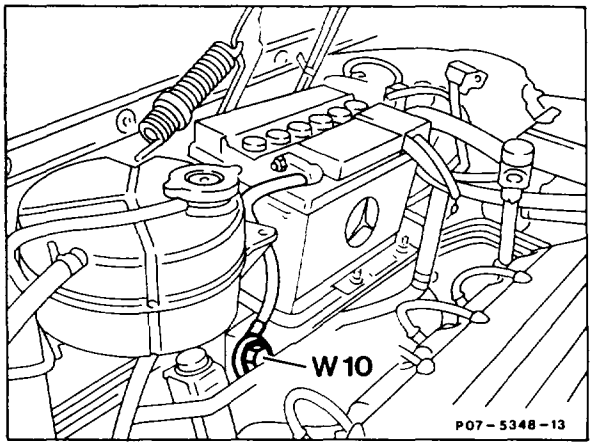

W10 Ground, battery

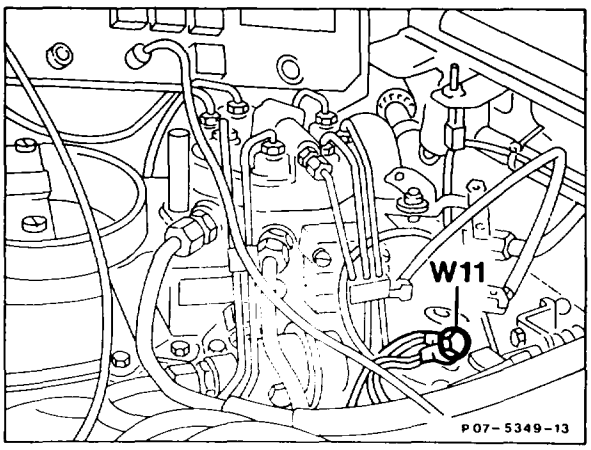

W11 Ground, engine (wiring bolted on)

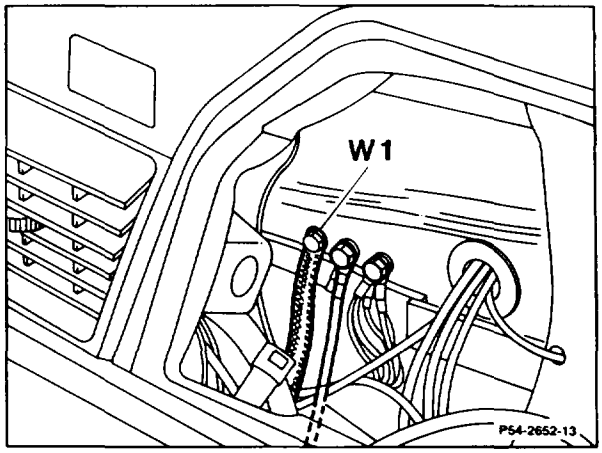

W1 Main ground (right footwell)

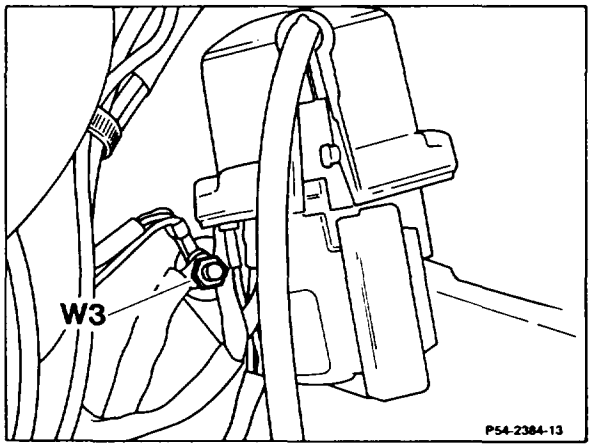

W3 Ground, front left wheelhouse (ignition coil)

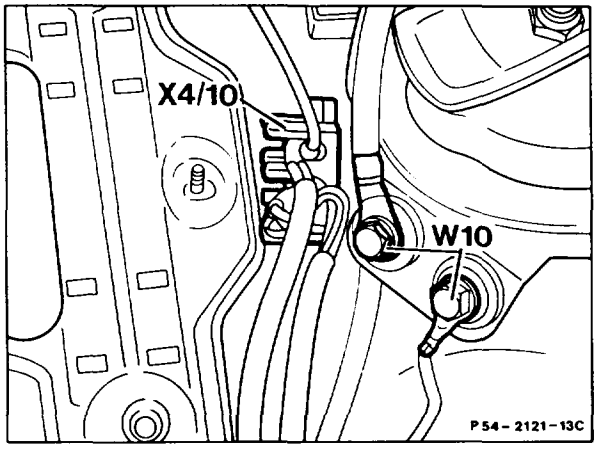

W10 Ground, battery

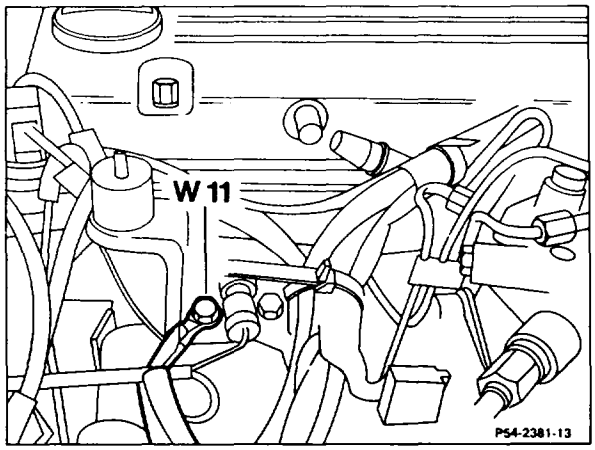

W11 Ground, engine (electric cable bolted on)

Model 126

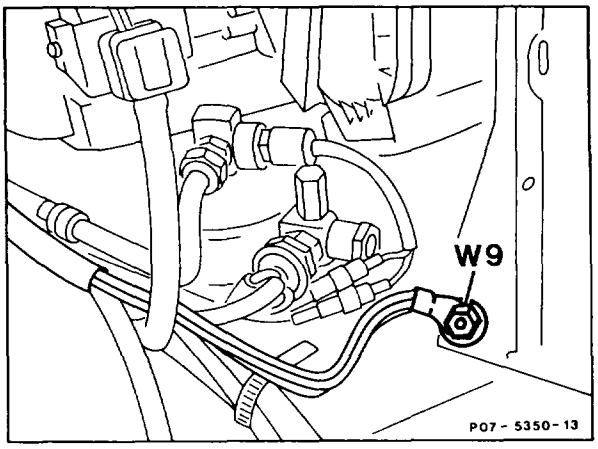

W9 Ground, front left (at headlight unit)

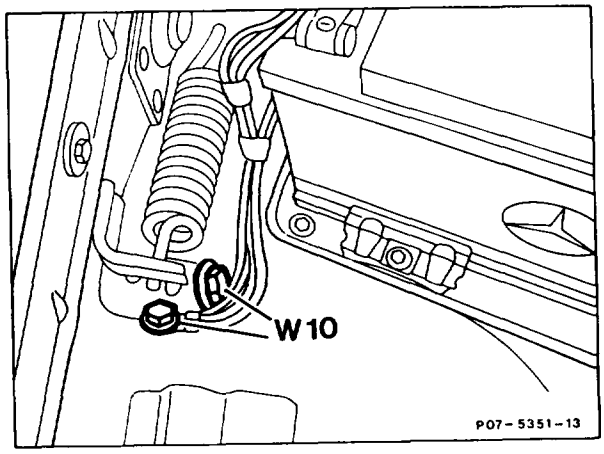

W10 Ground, battery

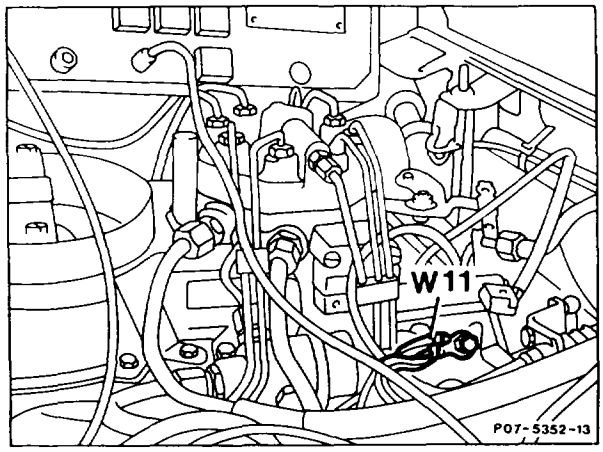

W11 Ground, engine (electric cables bolted on)

Model 129

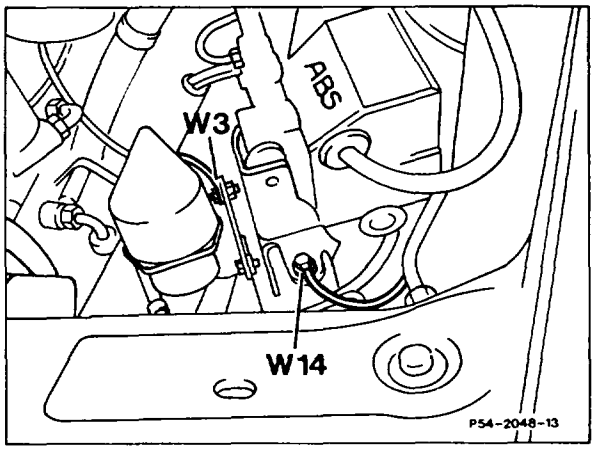

W3 Ground, front left wheelhouse (ignition coil)

W14 Ground, hydraulic unit bracket

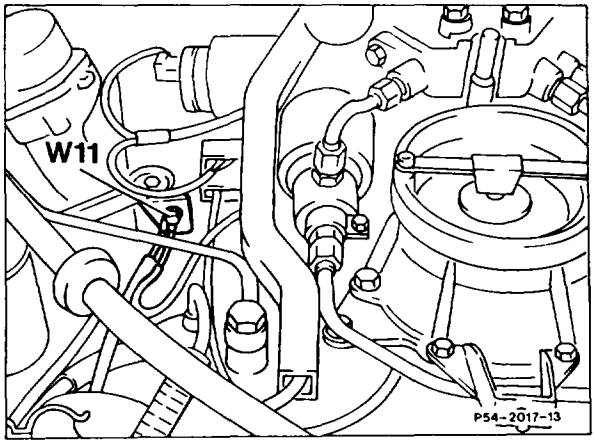

W11 Ground, engine, electric cable bolted on

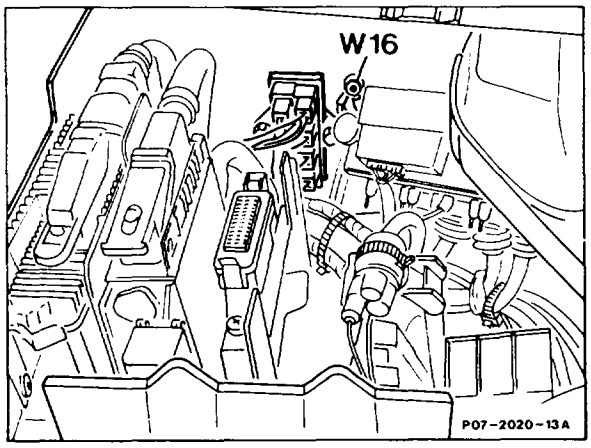

W16 Ground, component compartment

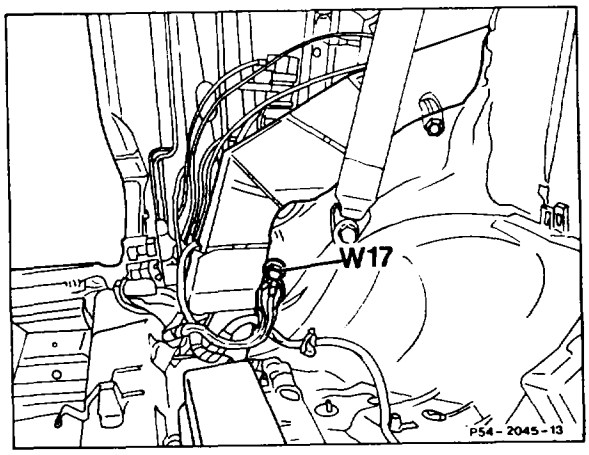

W17 Ground, right rear seat

Model **201**

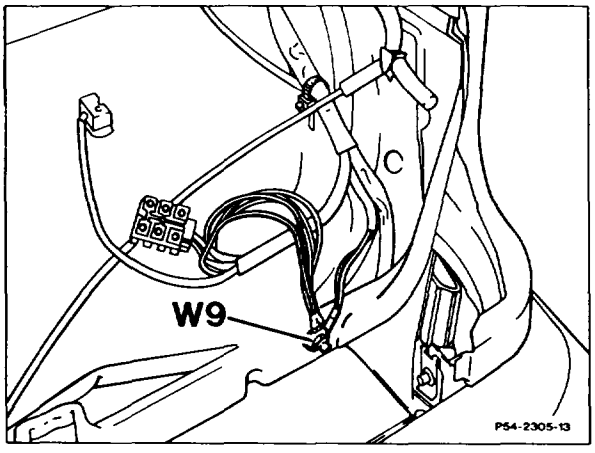

W9 Ground, front left (at headlight unit)

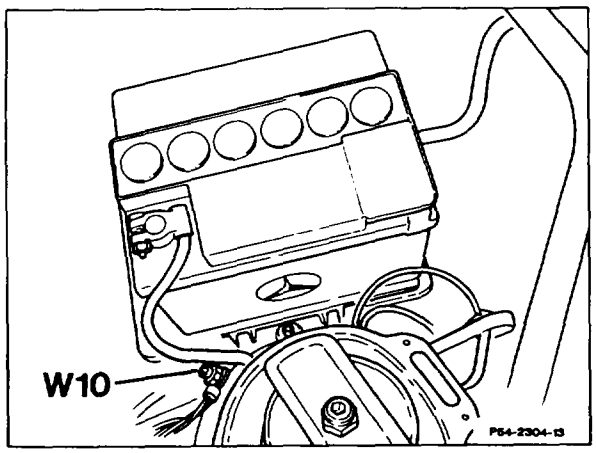

W10 Ground, battery

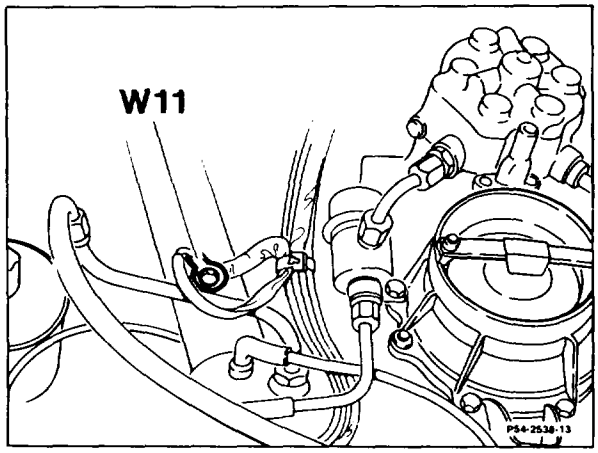

W11 Ground, engine (electric cables bolted on)

s. Location of Hall-effect road speed sensor (B6)

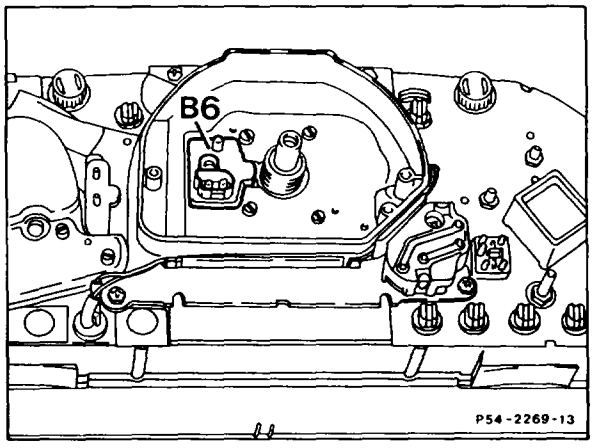

Models 124, 201

B6 Hall-effect road speed sensor

B. National versions (J) (USA)

		Coordinates
a.	Location of components	B 9
b.	Electrical test data of KE injection system (current at actuator mA)	A 10
c.	Without fault diagnosis by means of on/off ratio, up to model year 1987	B 10
d.	With fault diagnosis by means of on/off ratio and on-board diagnosis system, model year 1988–1989	D 10
	1 On-board diagnosis	D 10
	2 With fault diagnosis by means of on/off ratio	N 10
e.	Special tools, Commercially available tools and testers, up to model year 1989	E 11
f.	Connecting testers according to connection diagram, up to model year 1989	G 11
g.	Contact assignment of coupling of KE control unit (N3), up to model year 1989	K 11
h.	Test program with contact box, up to model year 1989	L 11
i.	With fault diagnosis by means of on/off ratio and on-board diagnosis system, as of model year 1990	K 13
	1 On-board diagnosis	K 13
	2 With fault diagnosis by means of on/off ratio	H 14
j.	Special tools, Commercially available tools and testers, as of model year 1990	A 15
k.	Connecting testers according to connection diagram, as of model year 1990	B 15
l.	Contact assignment of coupling of KE control unit (N3) and of engine systems control unit MAS (N16), as of model year 1990	E 15
m.	Test program with contact box, as of model year 1990	H 15
n.	EZL ignition control unit (N1/2)	E 17
o.	Table of voltage values of EZL/KE coolant temperature sensor (B11/2) and of KE intake air temperature sensor (B17/2)	G 17
p.	Table of altitude sensor (B18) and KE reference resistor (R17/1	H 17
q.	Test setup of 4-pin coolant temperature sensor (B11/2)	K 17
r.	Location of plug connections	L 17
s.	Location of ground points	B 18
t.	Location of Hall-effect road speed sensor (B6)	G 18

a) Location of components

Model 124, up to model year 1989

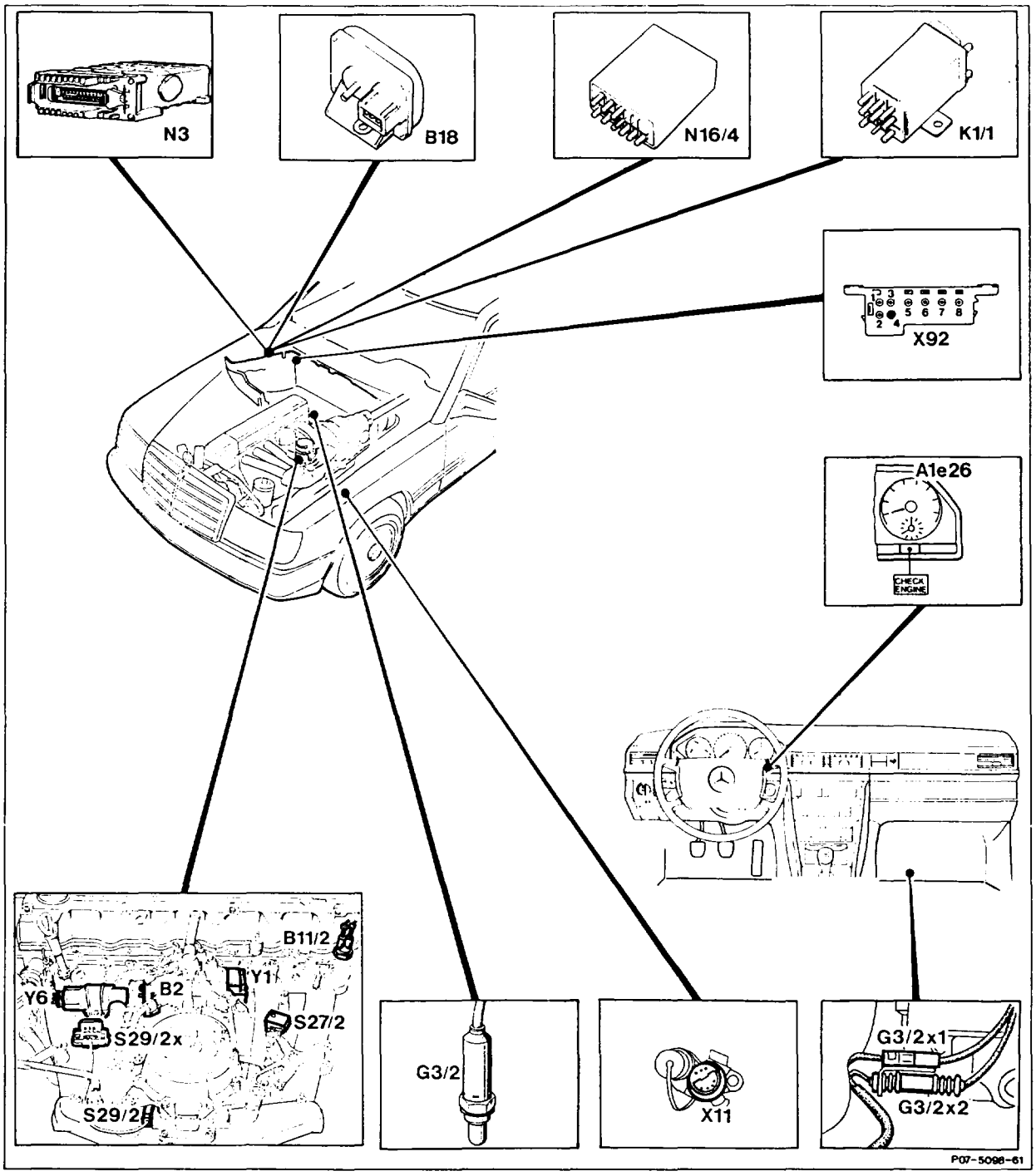

A1e26	CHECK ENGINE indicator lamp
B2	Air flow sensor position indicator
B11/2	4-pin coolant temperature sensor (EZL)
B18	Altitude sensor
G3/2	Heated oxygen sensor
G3/2x1	2-pin plug connection, oxygen sensor heating coil
G3/2x2	1-pin plug connection, oxygen sensor signal
K1/1	7-pin overvoltage protection relay 87E
N3	KE injection system control unit
N16/4	Fuel pump and kickdown shutoff relay
S27/2	Decel fuel shutoff microswitch
S29/2	Throttle valve switch, full load/idle speed recognition
S29/2x	Plug connection, full load/idle speed recognition throttle valve switch
X11	Diagnostic socket/terminal block, terminal TD
X92	Test coupling for diagnosis, 8-pin (flash code)
Y1	Electrohydraulic actuator
Y6	Idle speed air valve

Model 124, as of model year 1990

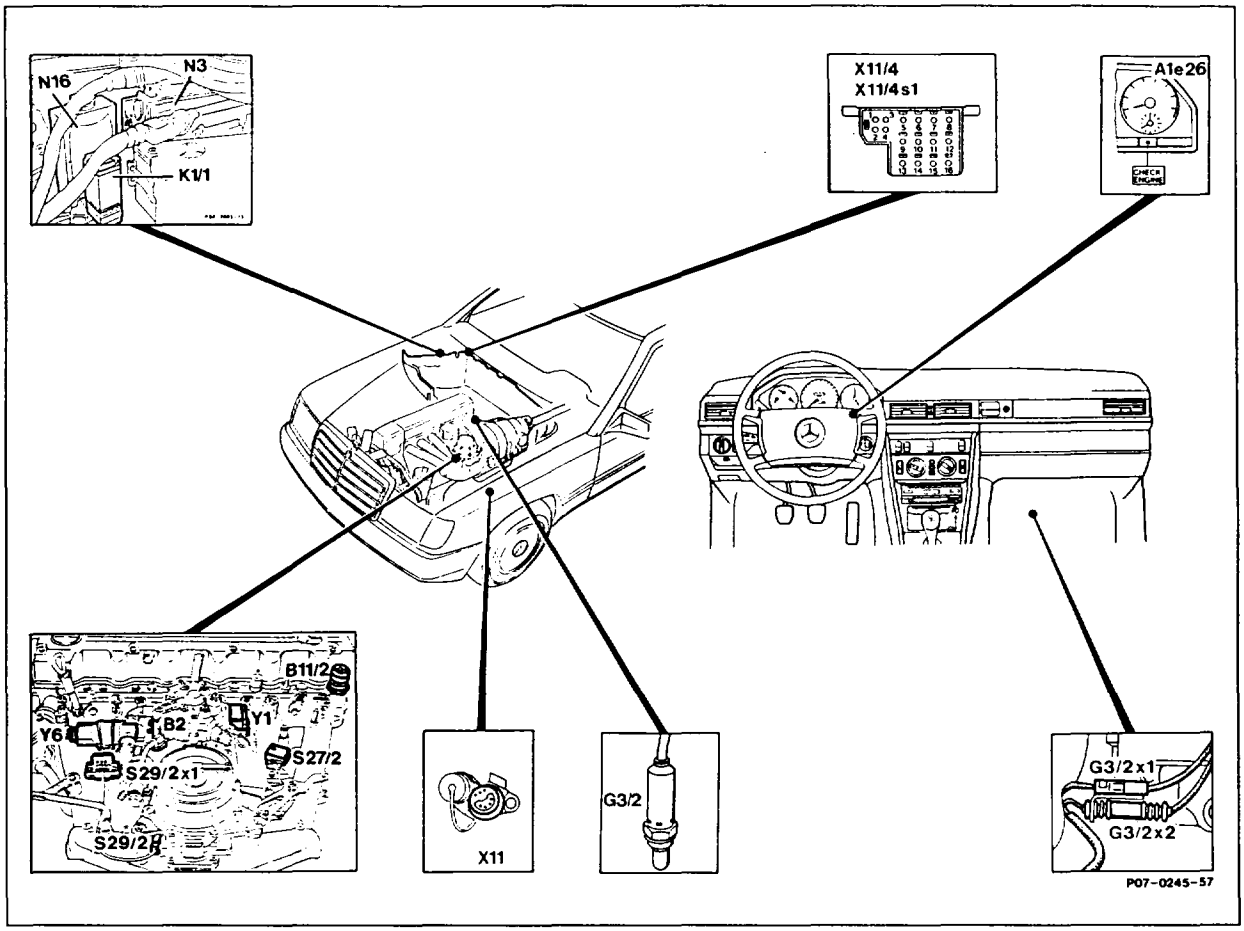

A1e26	CHECK ENGINE indicator lamp
B2	Air flow sensor position indicator
B11/2	Coolant temperature sensor (EZL/KE/2 E-E)
G3/2	Heated oxygen sensor
G3/2x1	Plug connection, oxygen sensor heating coil
G3/2x2	Plug connection, oxygen sensor sensor signal
K1/1	7-pin overvoltage protection relay 87E
N3	KE injection system control unit
N16	Engine systems control unit MAS
S27/2	Decel fuel shutoff microswitch
S29/2	Throttle valve switch, full load/idle speed recognition
S29/2x1	Plug connection, full load/idle speed recognition throttle valve switch
X11	9-pin diagnostic socket
X11/4	16-pin test coupling for diagnosis (pulse signal)
X11/4s1	Pushbutton for LED for California
Y1	Electrohydraulic actuator
Y6	Idle speed air valve

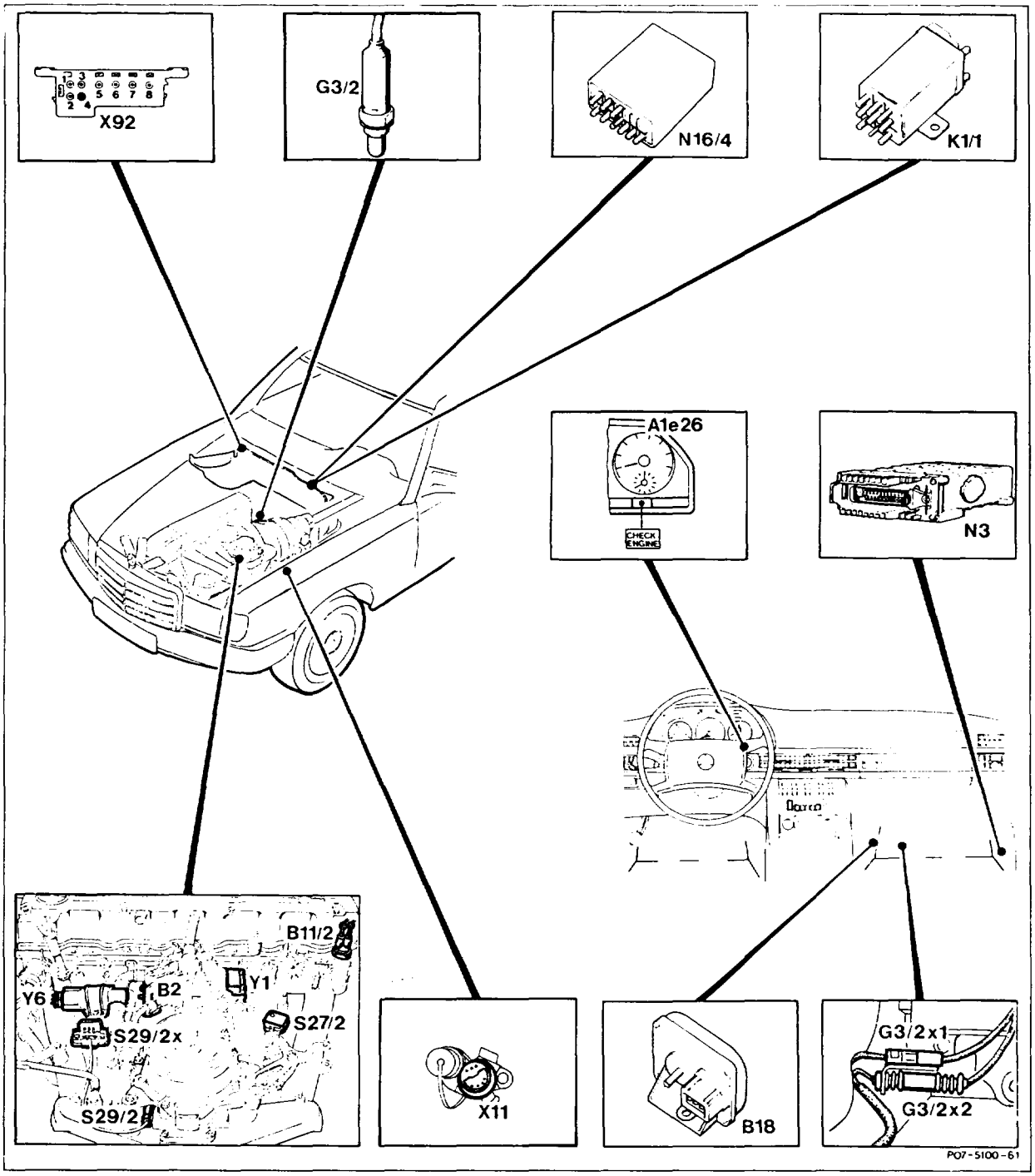
X92
G3/2
N16/4
K1/1
A1e26
CHECK ENGINE
N3
B11/2
Y1
Y6
B2
S27/2
S29/2x
S29/2
X11
B18
G3/2x1
G3/2x2
P07-5100-61

A1e26	CHECK ENGINE indicator lamp
B2	Air flow sensor position indicator
B11/2	4-pin coolant temperature sensor (EZL)
B18	Altitude sensor
G3/2	Heated oxygen sensor
G3/2x1	2-pin plug connection, oxygen sensor heating coil
G3/2x2	1-pin plug connection, oxygen sensor signal
K1/1	7-pin overvoltage protection relay 87E
N3	KE injection system control unit
N16/4	Fuel pump and kickdown shutoff relay
S27/2	Decel fuel shutoff microswitch
S29/2	Throttle valve switch, full load/idle speed recognition
S29/2x	Plug connection, full load/idle speed recognition throttle valve switch
X11	Diagnostic socket/terminal block, terminal TD
X92	Test coupling for diagnosis, 8-pin (flash code)
Y1	Electrohydraulic actuator
Y6	Idle speed air valve

Model 126, as of model year 1990

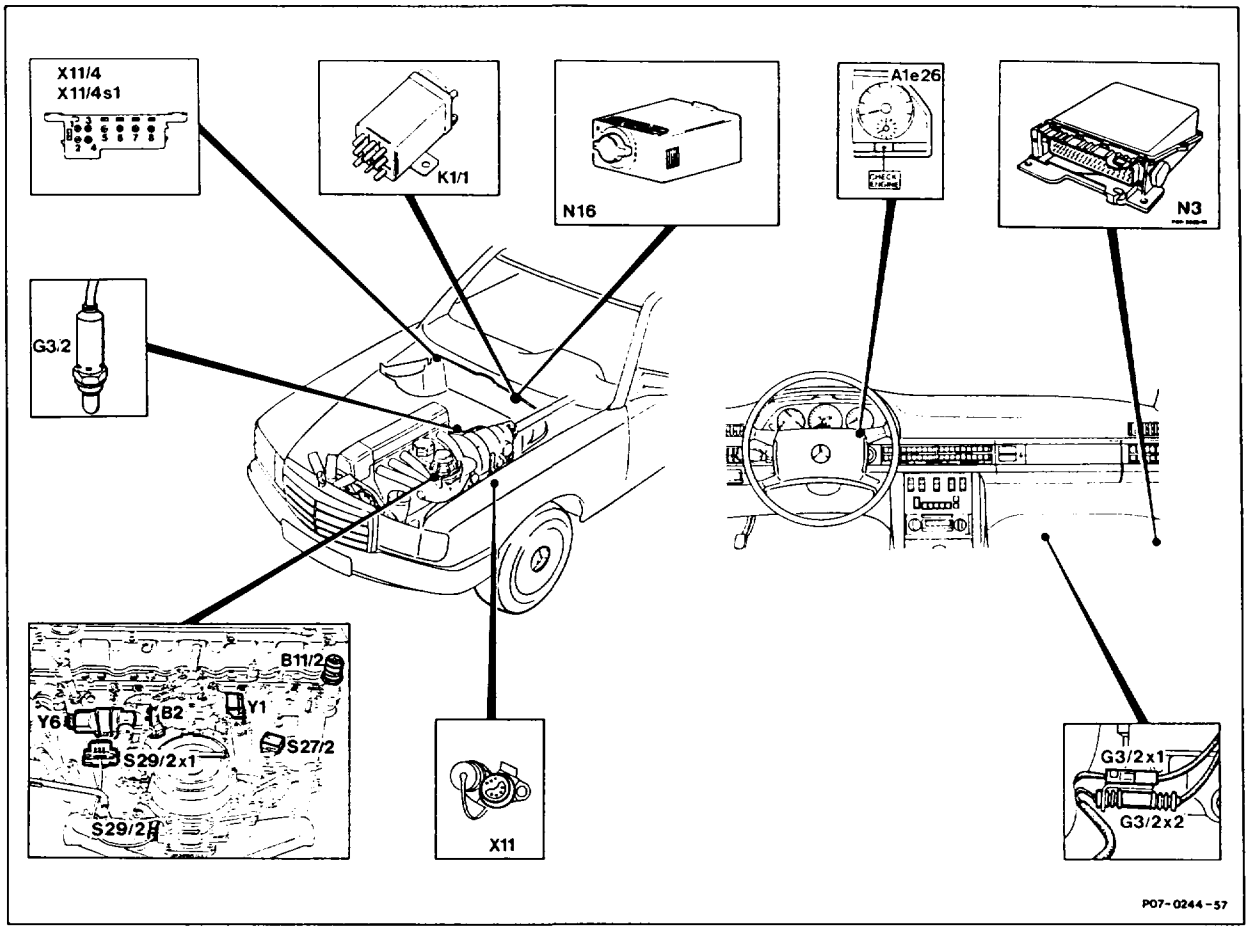

A1e26	CHECK ENGINE indicator lamp
B2	Air flow sensor position indicator
B11/2	Coolant temperature sensor (EZL/KE/2 E-E)
G3/2	Heated oxygen sensor
G3/2x1	Plug connection, oxygen sensor heating coil
G3/2x2	Plug connection, oxygen sensor signal
K1/1	7-pin overvoltage protection relay 87E
N3	KE injection system control unit
N16	Engine systems control unit MAS
S27/2	Decel fuel shutoff microswitch
S29/2	Throttle valve switch, full load/idle speed recognition
S29/2x1	Plug connection, full load/idle speed recognition throttle valve switch
X11	9-pin diagnostic socket
X11/4	16-pin test coupling for diagnosis (pulse signal)
X11/4s1	Pushbutton for LED for California
Y1	Electrohydraulic actuator
Y6	Idle speed air valve

Model 201, up to model year 1989

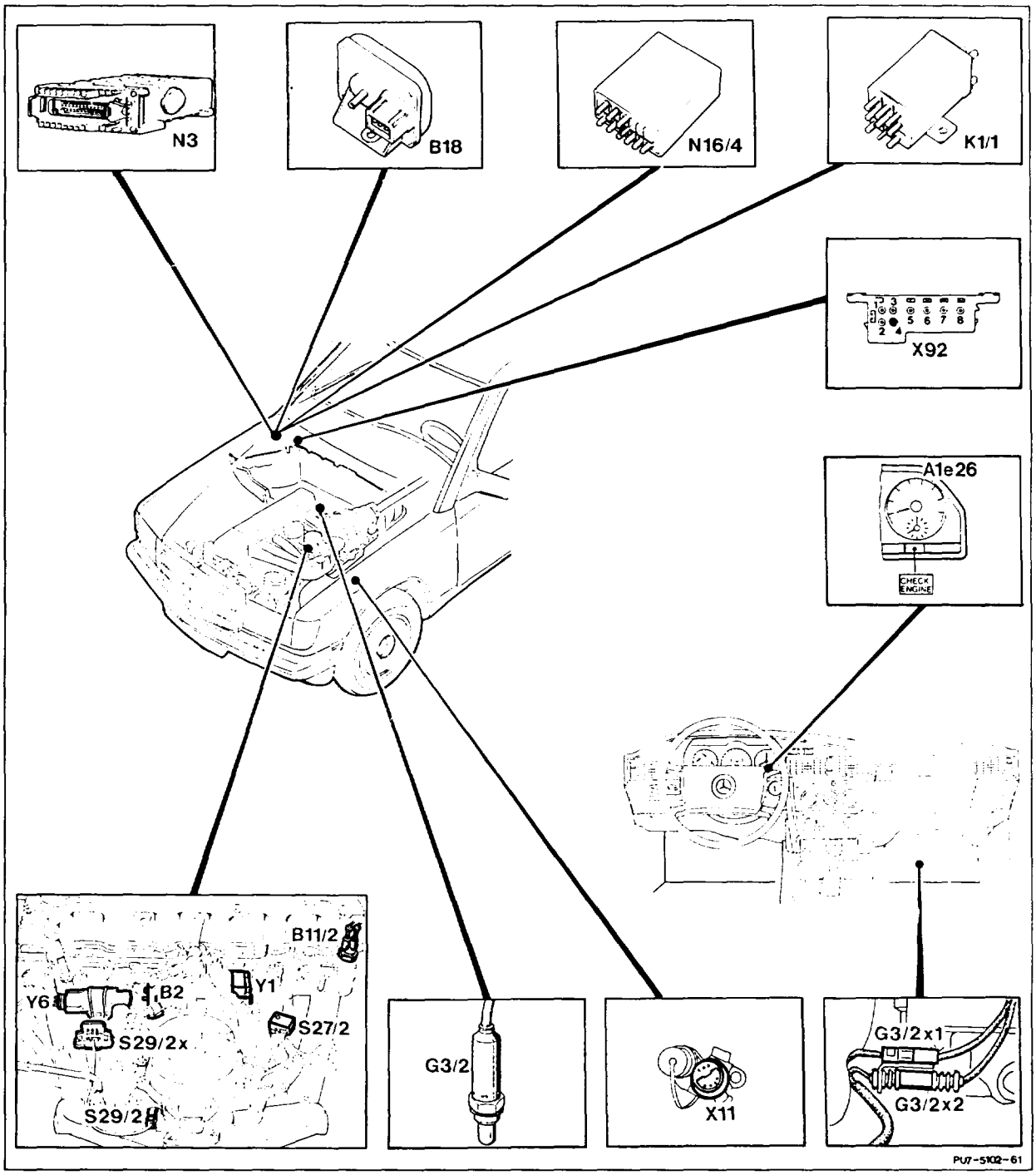

A1e26	CHECK ENGINE indicator lamp
B2	Air flow sensor position indicator
B11/2	4-pin coolant temperature sensor (EZL)
B18	Altitude sensor
G3/2	Heated oxygen sensor
G3/2x1	2-pin plug connection, oxygen sensor heating coil
G3/2x2	1-pin plug connection, oxygen sensor signal
K1/1	7-pin overvoltage protection relay 87E
N3	KE injection system control unit
N16/4	Fuel pump and kickdown shutoff relay
S27/2	Decel fuel shutoff microswitch
S29/2	Throttle valve switch, full load/idle speed recognition
S29/2x	Plug connection, full load/idle speed recognition throttle valve switch
X11	Diagnostic socket/terminal block, terminal TD
X92	Test coupling for diagnosis, 8-pin (flash code)
Y1	Electrohydraulic actuator
Y6	Idle speed air valve

Model 201, as of model year 1990

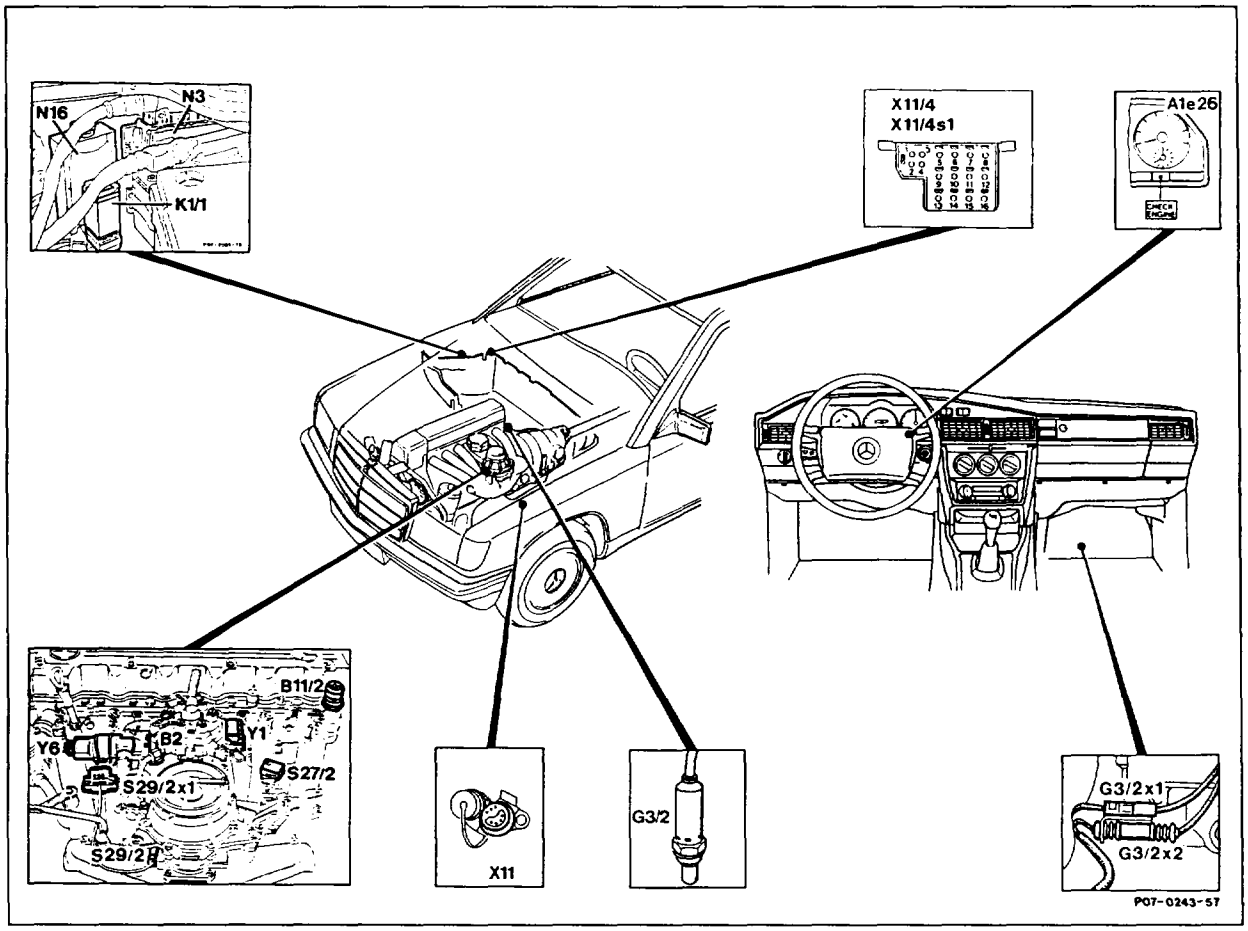

A1e26	CHECK ENGINE indicator lamp
B2	Air flow sensor position indicator
B11/2	Coolant temperature sensor (EZL/KE/2 E-E)
G3/2	Heated oxygen sensor
G3/2x1	Plug connection, oxygen sensor heating coil
G3/2x2	Plug connection, oxygen sensor signal
K1/1	7-pin overvoltage protection relay 87E
N3	KE injection system control unit
N16	Engine systems control unit MAS
S27/2	Decel fuel shutoff microswitch
S29/2	Throttle valve switch, full load/idle speed recognition
S29/2x1	Plug connection, full load/idle speed recognition throttle valve switch
X11	9-pin diagnostic socket
X11/4	16-pin test coupling for diagnosis (pulse signal)
X11/4s1	Pushbutton for LED for California
Y1	Electrohydraulic actuator
Y6	Idle speed air valve

b. Electrical test data KE fuel injection system (current at actuator mA)

Engine	National version model years	Current at actuator with ignition switched on	Coolant temperature sensor		Post-start enrichment at +20°C	Acceleration enrichment at +20°C and blipping throttle	Full load enrichment at approx. 2000/min	Part load mixture adaptation
			Coolant temperature +20°C (warming-up base value) resistance 2.3–2.8 kΩ Current at actuator mA	Coolant temperature +80°C Resistance 290–370 Ω Current at actuator mA	Current at actuator mA	Current at actuator mA	Current at actuator mA	Current at actuator mA
103.94	(J) (USA) 1987	20	2–6	0 ± 3	4–8	>15	4–8	Readout fluctuates
	(J) (USA) as of 1988 up to 1989		0 ± 1	0 ± 3	4–8		4–8	
	(USA) as of 1990		0–1 14–110 s after start	Readout fluctuates	8–12 0–8 s after start		4–8	
103.98	(J) (USA) 1987		2–6	0 ± 3	4–8		5–9	
	(J) (USA) as of 1988 up to 1989		0 ± 1	0 ± 3	4–8		5–9	
	(J) as of 1990		0 ± 1	0 ± 3	4–8		4–8	
	(USA) as of 1990		0–1 14–110 s after start	Readout fluctuates	8–12 0–8 s after start		4–8	

Decel fuel shutoff: current at actuator approx. –60 mA

c. Without fault diagnosis by means of on/off ratio, up to model year 1987

Up to 03/86 (production date 643) no fault recognition is integrated in the KE control unit (N3).

On these vehicles it is not possible to perform the test program by measuring the on/off ratio.

In this case perform the test program, section "h", test program with contact box up to model year 1989.

d. With fault diagnosis by means of on/off ratio and on-board diagnosis system, model year 1988–1989

1 On-board diagnosis

Only (USA) California

All exhaust-relevant components of the KE fuel injection system and of the exhaust gas recirculation are monitored by the control unit. Malfunctions caused by open circuit in the wiring or failure of one of these components are indicated by the indicator lamp in the "CHECK ENGINE" instrument cluster and at the same time stored in the KE control unit.

Reading fault memory with pushbutton switch and LED

A test coupling (X92) with pushbutton switch (2) and LED (4) is fitted to the right of the component compartment partition wall for this purpose. When the pushbutton switch is pressed (ignition: **ON**) for between 2 and 4 seconds, the flash pulse readout is initiated and the fault path indicated by the number of flashes.

After completion of the flash pulse output, the LED shows a steady light. If the pushbutton switch is once again pressed for between 2 and 4 seconds, any further fault path can be displayed. If no more faults are recognized, the KE control unit switches over to on/off ratio output.

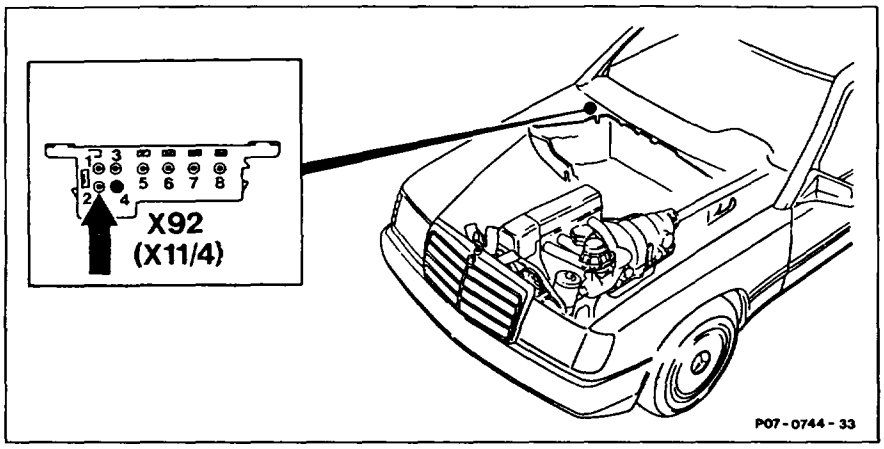

X92 Test coupling for diagnosis, 8-pin (flash code)
Model year 1988–1989

Erasing fault memory

Once a fault has been rectified without having disconnected the KE control unit, the fault memory must be erased as follows:

- Press pushbutton switch when flash pulse output displayed for 6–8 seconds.

Note

Each fault displayed must be erased individually.

- LED flashes once, stored fault has been erased.

Reading fault memory with pulse counter

Connect pulse counter to test coupling (X92) for this purpose.

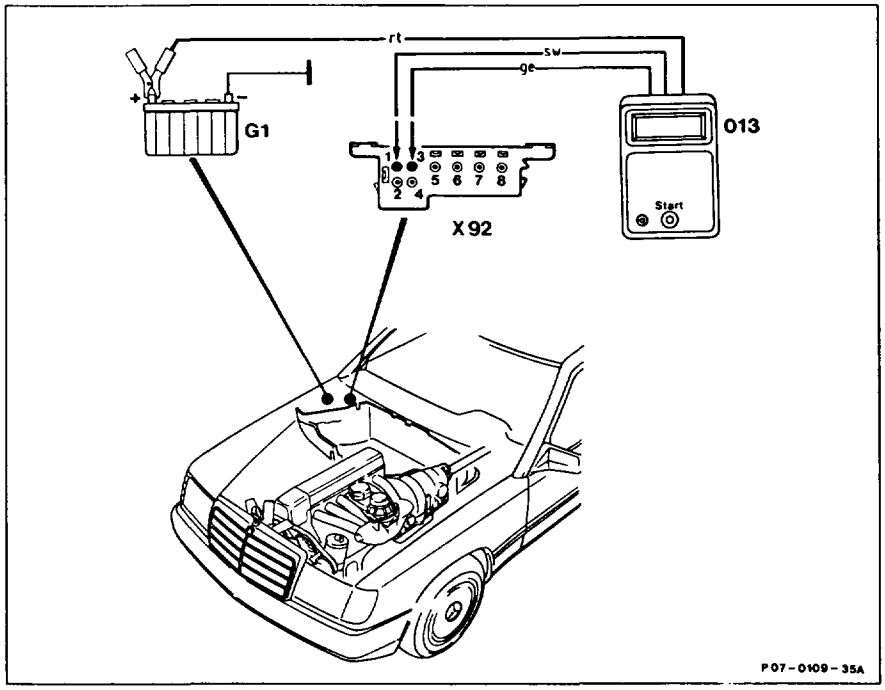

013 Pulse counter
G1 Battery
X92 Test coupling for diagnosis, 8-pin (flash code)

- If the LED U_{BATT} appears after connecting, pulse counter and voltage supply for pulse counter are in order.
- Press start button for between 2 and 4 seconds.
- Read off pulse output and note.
  The figure 1 means no fault is stored in the system. All other numbers are assigned to a certain fault group. If there are several faults in the system, the fault with the lowest pulse count is output first. Numbers from 1 to 12 appear in the display panel of the pulse counter.
- Once again, press start button for between 2 and 4 seconds, note any further fault. If there is no further fault in the system, no readout appears.

- Rectify noted faults (pulse readout) according to troubleshooting diagram. Connect contact box for this purpose as stated in the connection diagram.

The test steps listed in the column Remedy are listed in section "j".

Erasing fault memory
Once a fault has been rectified, the pulse displayed must be erased as follows:

- Press start button with pulse displayed for 6–8 seconds.

Note
Each pulse displayed must be erased individually.
- No readout:
  Stored fault has been erased.
- A number >1 displayed:
  Further faults in the system.

⚠
When dealing with an engine running complaint, read the fault memory as part of Op. no. 07–1100 before any repair work and also note the fault. This ensures that a distinction is made between faults which actually occur and "simulated faults" as faults are stored when performing test operations with the engine running which may be caused by a simulation or by a disconnected cable.
The fault memory must be erased after completing the test operations.

Table for fault recognition with pulse readout

Pulse readout	Possible cause	Test step/Remedy
1	No fault in system	–
2	Throttle valve switch, full load contact	7.0–7.3
3	Coolant temperature sensor	8.0–8.2
4	Air flow sensor position indicator	9.0–9.3
5	Oxygen sensor	11.0–11.6
6	Not assigned	–
7	TD signal	14.0–14.3
8	Altitude correction sensor	16.0–16.4
9	Electric actuator	3.0–3.4
10	Throttle valve switch, idle speed contact	6.0–6.4

Note

LED U_{BATT} must light up in the display panel. If not, perform the following test.

Pulse readout	Test step/ Test scope	Test connection	Operation/ Requirement	Specification	Possible cause/Remedy
–	1.0 Ground point	G1 (+) — V — X92 — 1	Ignition: **ON** Unplug coupling at X92	11–14 V	Ground connection W10 loose, Open circuit in wiring from test coupling (X92) Contact 1 to W10
–	2.0 Test coupling (X92) actuation	X92 3 — V — X92 — 1	Ignition: **ON** Unplug coupling at X92	0.7–2.5 V	Test coupling (X92) Open circuit in wiring
–	3.0 Cable terminal 87E	K1/1 2 — Ω — X92 — 2	Ignition: **OFF** Unplug coupling at X92, Unplug coupling at overvoltage protection (K1/1)	< 1 Ω	Open circuit in wiring
	3.1 Cable	N3 23 — Ω — X92 — 3	Ignition: **OFF** Unplug coupling at X92	< 1 Ω	Open circuit in wiring
	3.2 Cable	X92 1 — Ω — W10 ⊥	Ignition: **OFF** Unplug coupling at X92	< 1 Ω	Open circuit in wiring

2 With fault diagnosis by means of on/off ratio

Since 04/86 faulty input signals have been recognized by the KE control unit (N3) and passed to the lambda test output. Fault recognition is performed with the lambda control tester (012) at the diagnostic socket (X11).

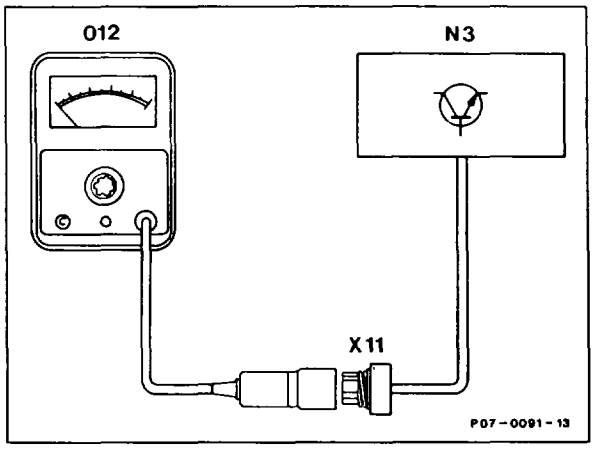

Lambda control tester	Position
Bosch	100% IR
Hermann	100% ⏦

Fault recognition enables various components of the KE injection system to be checked by measuring the on/off ratio. The faults are not stored and can only be displayed directly by measuring the on/off ratio (i.e. only if the fault exists at that moment).

Output of on/off ratio

On the national versions (J) and (USA) Federal the on/off ratio can be read out directly after connection.

On the national version (USA) California, the output for the fault diagnosis by means of the on/off ratio is only performed after the fault memory has been read.
If the pulse readout is "1" or after the last fault has been read, the pushbutton switch in the diagnostic socket or at the pulse counter must once again be pressed (for 2–4 seconds) in order to output the on/off ratio.

Before reading the fault memory, the display with the engine running is at 0% or 85% of the CHECK ENGINE indicator lamp lights up.

Recognition of the control units:
1 Connect lambda control tester.
2 Switch on ignition.

National version	On/off ratio readout	KE control unit
(J) and (USA) Federal	70%	w/o pulse readout
(USA) California	85%	with pulse readout

Note
The control unit is switched over to on/off ratio output by pressing the pushbutton switch in order to test the lambda control.

For wiring diagram, see appropriate wiring diagram volume (07.3–0128).

Perform test (measuring on/off ratio) for dealing with engine running complaints, e.g. irregular idling.

Readout fluctuates:
No fault in system.

Test conditions:
Battery voltage 11–14 V,
Engine oil temperature, approx. 80°C,
Engine idling.

The test steps listed in the column Remedy are contained in section "h".

Table for fault recognition with on/off ratio readout

On/off ratio in %	Possible causes of faults	Test scope	Test step/Remedy
0	No voltage or ground at diagnostic socket (X11). Cable of diagnostic socket (X11), contact 3, has open circuit. Lambda control tester faulty. Mixture settnng too rich.	Test voltage supply, ground and diagnostic socket (X11) cable. Check lambda setting.	1.0–1.2 2.0–2.8 RI 07.3–2053, or 07.3–5203 with (USA)
10	Air flow sensor position indicator (B2) incorrectly connected or faulty. Possible fast idling speed. Contact assignment of throttle valve switch (S29/2), idle/full load contact incorrectly connected or short circuit (full load contact closed with insufficient throughput).	Test signal of air flow sensor position indicator (B2). Leitungsverlegung prüfen. Check cable routing.	5.0–5.3 9.0–9.3
20	Full load contact incorrectly connected or faulty. 20% readout only if throttle valve switch (S29/2). operated.	Test full load contact	7.0–7.3
30	Short circuit or open circuit to KE control unit (N3). Coolant temperature sensor (B11/2) faulty.	Test coolant temperature sensor (B11/2). Test wiring.	8.0–8.7

On/off ratio in %	Possible causes of faults	Test scope	Test step
40	Open circuit or short circuit to air flow sensor position indicator (B2) or air flow sensor position indicator (B2) faulty. Possible fast idling speed.	Test air flow sensor position indicator (B2). Test KE control unit. Test wiring.	9.0–9.4
50	Oxygen sensor (G3/2) not operational or faulty. Open circuit in wiring.	Engine oil temperature approx. 80°C. Test oxygen sensor (G3/2). Test wiring.	11.0–11.6
60	Road speed signal at KE control unit (N3) implausible. [1])	Test Hall-effect sensor (B6). Test wiring.	12.0–13.3
70	No TNA signal implausible [1]). Open circuit in wiring at KE control unit (N3).	Test TNA signal.	14.0–14.3
80	Open circuit or short to ground Intake air temperature sensor (B17/2) faulty. Altitude correction sensor (B18) faulty.	Test intake air temperature sensor (B17/2). Test altitude correction sensor (B18). Test wiring.	15.0–16.4
85	Only (USA) California	–	–
90	Current to electrohydraulic actuator (Y1) implausible [1])	Test electrohydraulic actuator.	–

[1]) The plausibility of the road speed signal can **only** be checked by the KE control unit (N3) when driving (engine output dynamometer/road). If an implausible road speed signal is recognized when driving, the control unit (N3) "sets" the on/off ratio of 60% and stores this. The fault is not erased until the ignition is switched off. A "60% on/off ratio" test is performed e.g. in dealing with the complaint: jerking when vehicle moving and throttle valve closed.

On/off ratio in %	Possible causes of faults	Test scope	Test step
95	Decel fuel shutoff active.	–	–
100	No voltage or ground at KE control unit (N3) or KE control unit (N3) faulty. Lambda setting too lean. Oxygen sensor (G3/2) faulty (short to ground). Overvoltage protection fuse (K1/1) faulty. Lambda control tester faulty.	Test overvoltage protection (K1/1). Test ground. Check setting of lambda control. Test oxygen sensor signal. KE control unit (N3) faulty.	1.0–1.2 2.0–2.8 RI 07.3–2053, or 07.3–5203 with (USA) 11.0–11.10 12.1
Readout fluctu-ates	With lambda control: No fault in the area of the monitored signals.	–	–

[1]) The plausibility of the road speed signal can **only** be checked by the KE control unit (N3) when driving (engine output dynamometer/road). If an implausible road speed signal is recognized when driving, the control unit (N3) "sets" the on/off ratio of 60% and stores this. The fault is not erased until the ignition is switched off. A "60% on/off ratio" test is performed e.g. in dealing with the complaint: jerking when vehicle moving and throttle valve closed.

[2]) Engine 103.94/983 (CH) (DK) (N) (S) (SF) as of model year 1991.

e. Special tools up to model year 1989

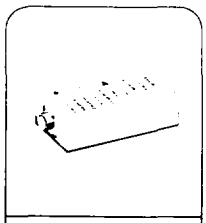

124 589 00 21 00
54

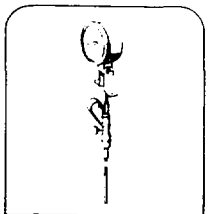

124 589 07 21 00
18

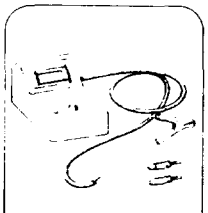

124 589 19 21 00
07 83

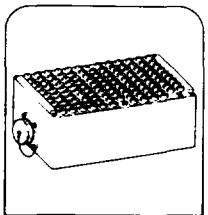

129 589 00 21 00
54

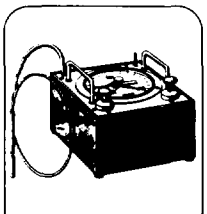

201 589 13 21 00
00 42 80

Lambda-Regelungs-tester

909 589 00 21 00

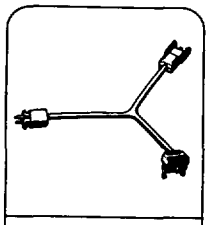

102 589 04 63 00
07

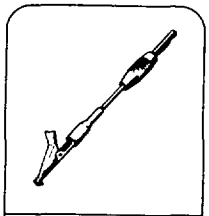

102 589 05 63 00
07

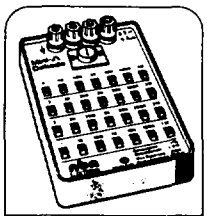

124 589 09 63 00
15 54

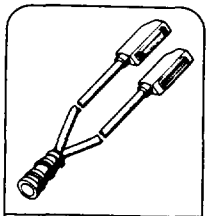

124 589 33 63 00
07 28 54

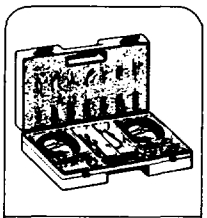

201 589 00 99 00
15 54

Commercially available tools and testers (see Workshop Equipment Manual)

Designation	e.g. Make, order no.
Multimeter	Sun, DMM-5
Twin socket	Hermann, ECD 53
Engine tester	Bosch, MOT 002.02

f. Connecting testers according to connection diagram, up to model year 1989 models 124, 201

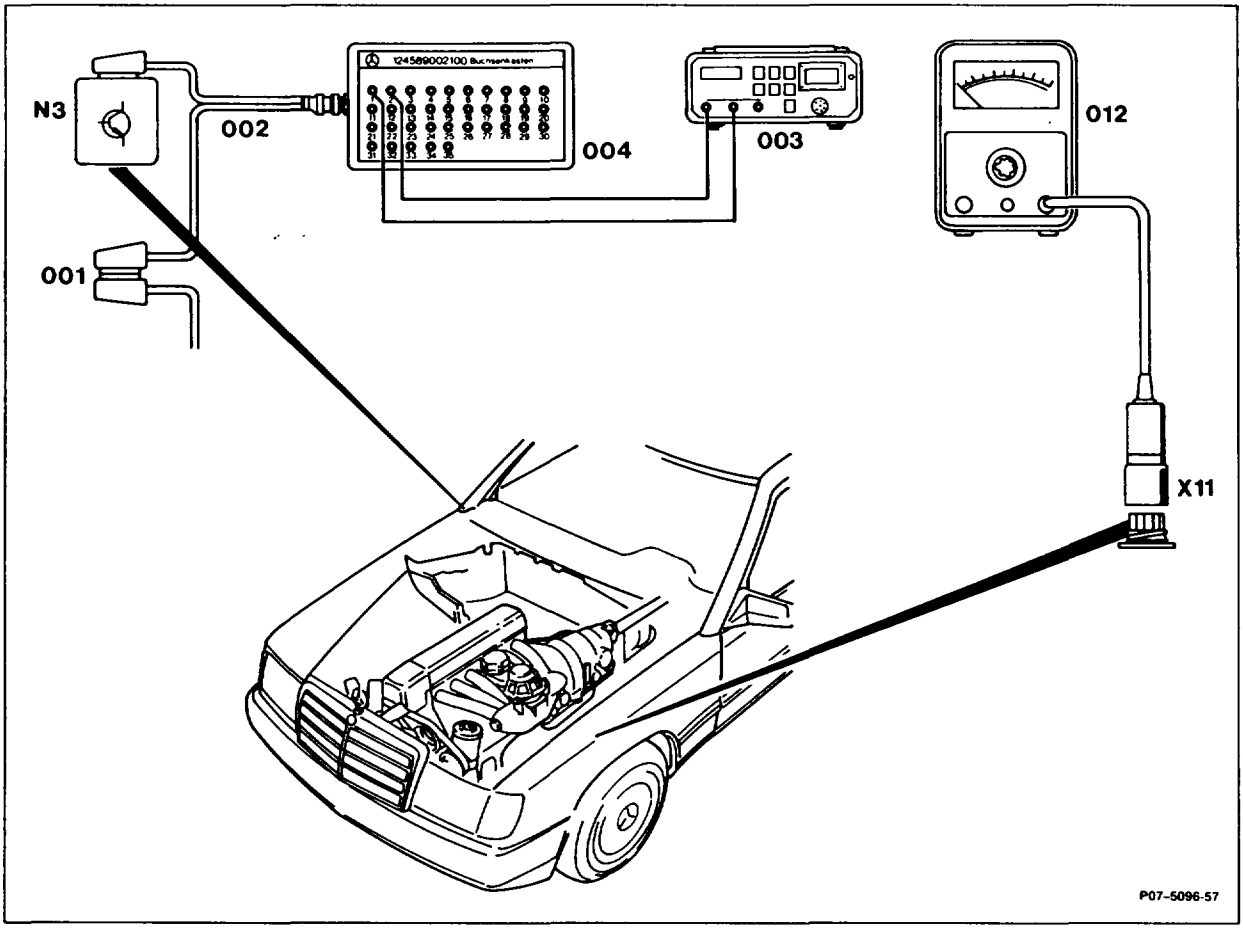

001	KE control unit coupling	012	Lambda control tester
002	Test cable	N3	KE control unit
003	Multimeter	X11	Diagnostic socket/terminal block, terminal TD
004	35-pin contact box		

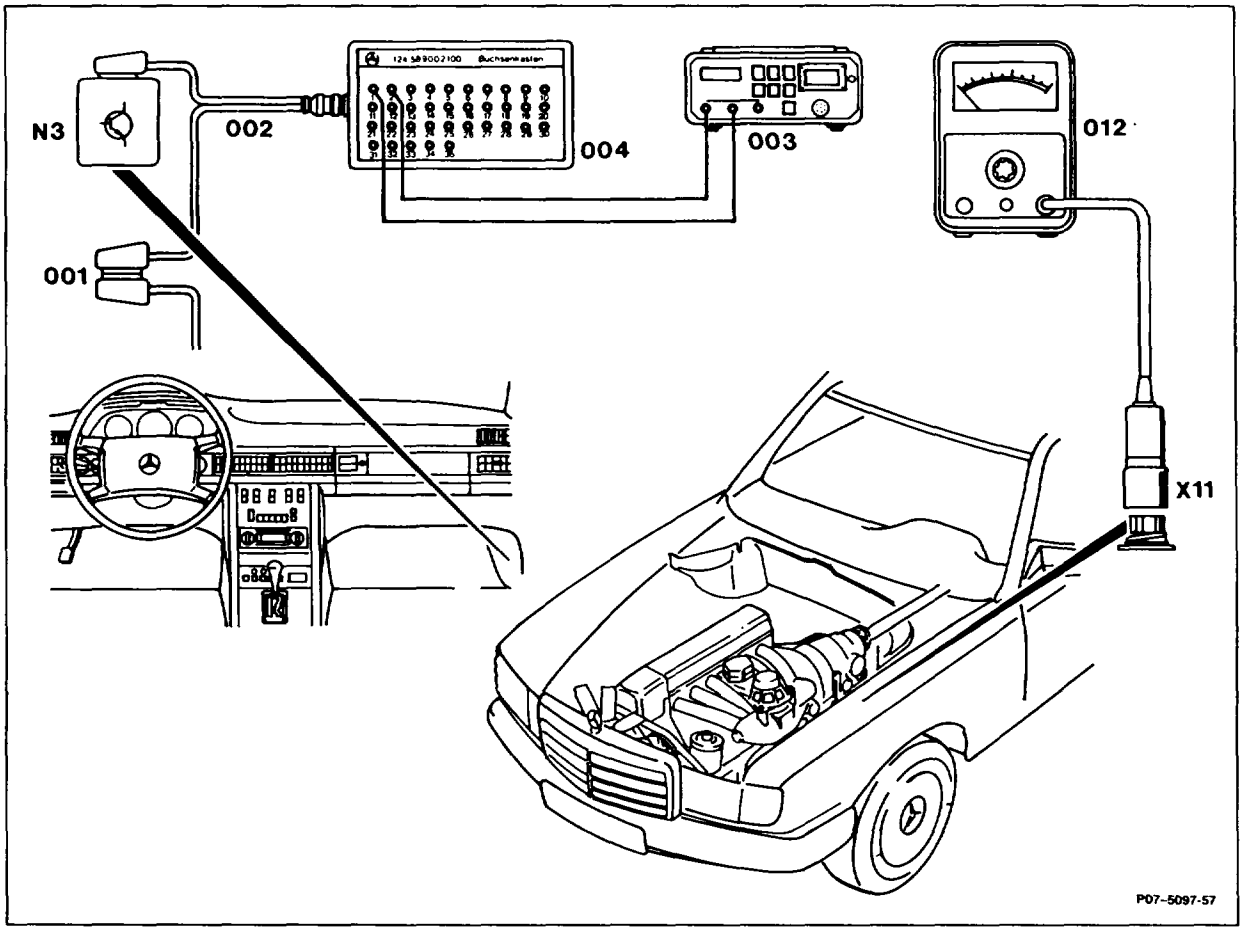

001	KE control unit coupling	012	Lambda control tester
002	Test cable	N3	KE control unit
003	Multimeter	X11	Diagnostic socket/terminal block, terminal TD
004	35-pin contact box		

g. Contact assignment of coupling of KE control unit (N3), up to model year 1989

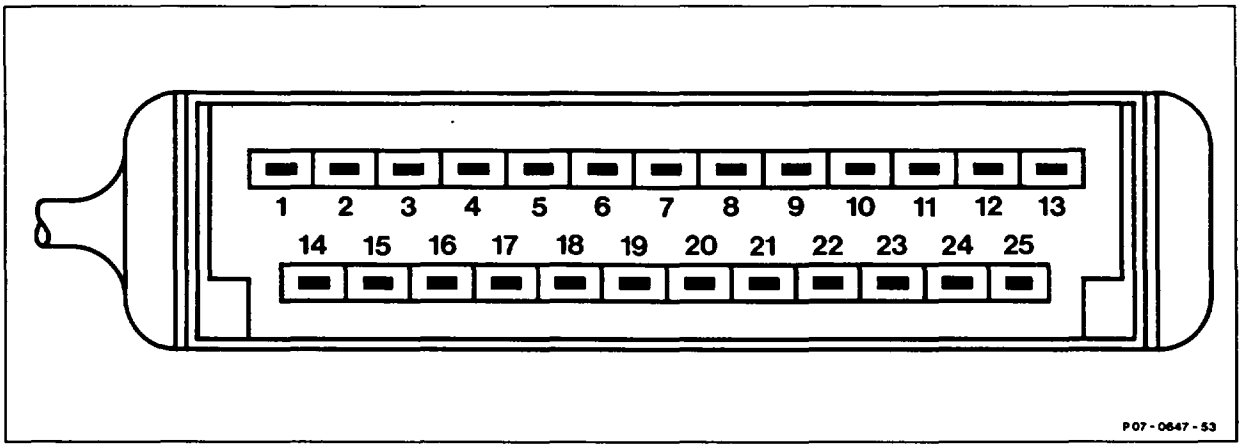

Engine 103.94/98

1	Overvoltage protection relay (K1, K1/1), contact 2, terminal 87
2	Engine ground (W11)
3	Idle speed air valve (Y6)
4	Not assigned
5	Throttle valve switch (S29/2), contact 3, full load recognition
6	Hall-effect road speed sensor (B6)
7	Ground of connector 7 is connected internally to ground of connector 2
8	Heated oxygen sensor
9	Fuel pump relay (N16/1), contact 2, terminal TF
10	Electrohydraulic actuator (Y1), contact 2
11	Altitude sensor (B18), contact 1
12	Electrohydraulic actuator (Y1), contact 3
13	Idle speed control unit (N8), contact 4, idle speed recognition
14	Not assigned
15	(USA) California: Actuation terminal 30A at K1/1, (USA) Federal: OXYGEN SENSOR indicator lamp (A1e10) up to 1987 CHECK ENGINE indicator lamp (A1e26) as of 1988
16	Gear recognition plug connection
17	Air flow sensor position indicator (B2), contact 2
18	Air flow sensor position indicator (B2), contact 3
19	Compressor cutoff control unit (N6), contact 4
20	Battery ground (W10)
21	Coolant temperature sensor (B11/2)
22	Not assigned
23	(USA) California: Lambda signal, CHECK-ENGINE indicator lamp (A1e26)
24	Decel fuel shutoff microswitch (S27/2)
25	TD signal

h. Test program with contact box, up to model year 1989

Symbols for testers

Contact box

Lambda control tester

Multimeter

Battery

Contact

 Connector

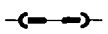 Bridge

Symbols for test mode with multimeter

Voltage measurement (volts, DC)

Current measurement (amperes, DC)

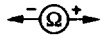 Resistance measurement (ohms)

Note

If the on/off ratio readout is constant, first of all perform test steps 1–3. If the specification of a test step is in order, e.g. step 4, it is not necessary to perform step 4.1.

If the test values at the throttle valve switch (S29/2) are achieved in test step 6 during part load mixture adaptation, full load enrichment is also active.

Test step	Test scope	Test connection	Operation/ Requirement	Specification	Possible cause/Remedy
1.0	Ground points	N3 X35 2 — tml.30	Ignition: **OFF**	11–14 V	Ground connection W11 loose, Open circuit in wiring
1.1	Ground points	N3 X35 7 — tml.30	Ignition: **OFF**	11–14 V	KE control unit (N3) faulty, Open circuit in wiring
1.2	Ground points	N3 G1 20 — (+)	Ignition: **OFF**	11–14 V	Ground connection W10 loose, Open circuit in wiring
2.0	Supply voltage of N3, connector 1	N3 2 — 1	Ignition: **ON**	11–14 V	Fuse in overvoltage protection K1/1, overvoltage protection K1/1 faulty or not plugged in, Open circuit in wiring
2.1	Voltage terminal 30	N3 K1/1 2 — 1	Ignition: **OFF** Overvoltage protection (K1/1) disconnected	11–14 V	Open circuit in wiring
2.2	Cable terminal 30	N3 X35 2 — tml.30	Ignition: **ON** Overvoltage protection (K1/1) disconnected	11–14 V	Open circuit in wiring
2.3	Voltage terminal 15	N3 K1/1 2 — 3	Ignition: **OFF** Overvoltage protection (K1/1) disconnected	11–14 V	Open circuit in wiring

Test step	Test scope	Test connection	Operation/ Requirement	Specification	Possible cause/Remedy
2.4	Cable terminal 15	N3 X26 2 — V — 1	Ignition: **ON** X26 disconnected	11–14 V	Open circuit in wiring
2.5	Cable terminal 87E or 87	N3 K1/1 1 — Ω — 2	Ignition: **OFF** Overvoltage protection (K1/1) disconnected	< 1 Ω	Open circuit in wiring
2.6	Cable terminal 31 (ground)	N3 K1/1 2 — Ω — 5	Ignition: **OFF** Overvoltage protection (K1/1) disconnected	< 1 Ω	Open circuit in wiring
2.7	Supply voltage of N3, terminal 30a	(USA) California N3 2 — V — 15	Ignition: **ON**	11–14 V	Overvoltage protection K1/1 faulty, Open circuit in wiring
2.8	Cable	(USA) California N3 K1/1 15 — Ω — 4	Ignition: **OFF** Overvoltage protection (K1/1) disconnected	< 1 Ω	Open circuit in wiring

Test step	Test scope	Test connection	Operation/ Requirement	Specification	Possible cause/Remedy
3.0	Current at electro-hydraulic actuator (Y1)	set to A Y1 2 — 1	Ignition: **OFF** Connect test cable 102 589 04 63 00 to actuator (Y1) Ignition: **ON**	 20 mA	 Electrohydraulic actuator (Y1), Open circuit in wiring
			Engine: **idling**, at operating temperature	0 ± 3 mA	KE control unit (N3), Set lambda control, Test oxygen sensor (G3/2) (test step 11.0–11.10)
3.1	Fault circuit electro-hydraulic actuator (Y1)	N3 10 — 12	Ignition: **OFF** Disconnect test cable, KE control unit (N3) disconnected	19.5 ± 1Ω	Electrohydraulic actuator (Y1), Open circuit in wiring
3.2	Electro-hydraulic actuator (Y1)	Y1 1 — 2	Ignition: **OFF** Coupling (Y1) disconnected	19.5 ± 1Ω	Replace electrohydraulic actuator (Y1)
3.3	Cable	N3 Y1 10 — 2	Ignition: **OFF** Coupling (Y1) disconnected	< 1 Ω	Open circuit in wiring
3.4	Cable	N3 Y1 12 — 1	Ignition: **OFF** Coupling (Y1) disconnected	< 1 Ω	Open circuit in wiring

Test step	Test scope	Test connection	Operation/ Requirement	Specification	Possible cause/Remedy
4.0	Cable from KE control unit (N3) to diagnostic socket (X11)	N3 X11 23 — Ω — 3	Ignition: **OFF** KE control unit (N3) disconnected	< 1 Ω	Open circuit in wiring
4.1	Cable	X11 ⊥ — Ω — 2	Ignition: **OFF**	< 1 Ω	Open circuit in wiring
4.2	Cable	X11 2 — V — 6	Ignition: **ON**	11–14 V	Open circuit in wiring Fuse F1
5.0	Air flow sensor position indicator (B2)	N3 7 — V — 18	Engine: **start**, KE control unit (N3) connected	4.6–5.1 V	Air flow sensor position indicator, KE control unit (N3), Open circuit in wiring [1])
		N3 7 — V — 17	Engine: **idling**	0.55–0.95 V	Air flow sensor position indicator, KE control unit (N3), Open circuit in wiring [1])
5.1	Cable	B2 N3 1 — Ω — 7	Ignition: **OFF** KE control unit (N3) disconnected	< 1 Ω	Open circuit in wiring
5.2	Cable	B2 N3 2 — Ω — 17	Ignition: **OFF** KE control unit (N3) disconnected	< 1 Ω	Open circuit in wiring
5.3	Cable	B2 N3 3 — Ω — 18	Ignition: **OFF** KE control unit (N3) disconnected	< 1 Ω	Open circuit in wiring

[1]) See also test step 9.0–9.4.

Test step	Test scope	Test connection	Operation/ Requirement	Specification	Possible cause/Remedy
6.0	Distinguishing test		Ignition: **ON** Open microswitch (throttle valve must not be open)		Readout 40%, see test step 9.0–10.1, Readout 20%, see test step 7.0–7.3, Readout 70%, see test step 14.0–14.4
6.1	Fault circuit idle speed contact (S29/2)	N3 2 — Ω — 13	Ignition: **OFF** Depress accelerator	< 1 Ω ∞	Contacts of coupling (S29/2x1) incorrectly connected, Idle speed contact, Open circuit in wiring
6.2	Idle speed contact (S29/2)	S29/2x1 1 — Ω — 2	Coupling (S29/2x1) disconnected, idle speed position Depress accelerator	< 1 Ω ∞	Adjust throttle valve switch (S29/2)
6.3	Cable	N3 S29/2x1 13 — Ω — 1	Ignition: **OFF**	< 1 Ω	Open circuit in wiring
6.4	Cable	N3 S29/2x1 2 — Ω — 2	Ignition: **OFF**	< 1 Ω	Open circuit in wiring

Test step	Test scope	Test connection	Operation/ Requirement	Specification	Possible cause/Remedy
7.0	Fault circuit full load contact (S29/2)	N3 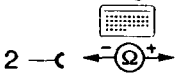 2 — 5	Ignition: **OFF** Coupling at KE control unit (N3) disconnected Accelerator in full throttle position	∞ < 1 Ω	Contacts of coupling S29/2x1 incorrectly connected, Full load contact, Open circuit in wiring
7.1	Full load contact (S29/2)	S29/2x1 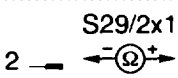 2 — 3	Coupling (S29/2x1) disconnected Accelerator in full throttle position	∞ < 1 Ω	Adjust or replace throttle valve switch (S29/2)
7.2	Cable	N3 S29/2x1 5 — 3	Ignition: **OFF**	< 1 Ω	Open circuit in wiring
7.3	Cable	N3 S29/2x1 2 — 2	Ignition: **OFF**	< 1 Ω	Open circuit in wiring

Test step	Test scope	Test connection	Operation/ Requirement	Specification	Possible cause/Remedy
8.0	Fault circuit coolant temperature sensor (B11/2)	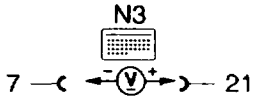	Engine: **idling**, KE control unit (N3) connected	At +80°C 0.29–0.35 V, other values see table temperature sensor (B11/2)	Coolant temperature sensor (B11/2), Cable
8.1	Coolant temperature sensor (B11/2) 2-pin	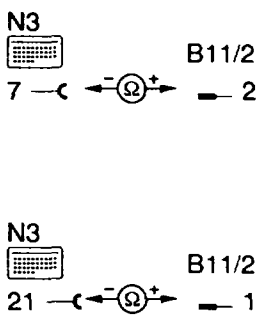	Ignition: **OFF** Coupling at temperature sensor (B11/2) disconnected	See diagram temperature sensor (B11/2)	Coolant temperature sensor (B11/2)
8.2	Cable	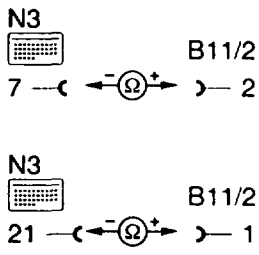	Ignition: **OFF**	< 1 Ω	Open circuit in wiring

Test step	Test scope	Test connection	Operation/ Requirement	Specification	Possible cause/Remedy
8.3	Coolant temperature sensor (B11/2) 4-pin	B11/2 1 — Ω — 3 B11/2 2 — Ω — 4	Ignition: **OFF** Coupling at temperature sensor (B11/2) disconnected, measure resistances 2 × diagonally and compare [1]	See table temperature sensor (B11/2)	Coolant temperature sensor (B11/2)
8.4	Cable	N3 7 — Ω — B11/2 4	Ignition: **OFF** Coupling at temperature sensor (B11/2) disconnected	< 1 Ω	Open circuit in wiring
8.5	Cable	N3 21 — Ω — B11/2 2	Ignition: **OFF** Coupling at temperature sensor (B11/2) disconnected	< 1 Ω	Open circuit in wiring
8.6	Cable	⊥ — Ω — B11/2 3	Ignition: **OFF** Coupling at temperature sensor (B11/2) disconnected	< 1 Ω	Open circuit in wiring
8.7	Cable	N1/2 1 — Ω — B11/2 1	Ignition: **OFF** Coupling at temperature sensor (B11/2) disconnected	< 1 Ω	Open circuit in wiring

1) See section "q".

Test step	Test scope	Test connection	Operation/ Requirement	Specification	Possible cause/Remedy
9.0	Air flow sensor position indicator (B2)	B2 1 — Ω — 3	Ignition: **OFF** Coupling at air flow sensor position indicator (B2) disconnected	3.6–4.4 kΩ	Air flow sensor position indicator (B2), KE control unit (N3), Wiring
		B2 1 — Ω — 2	Slowly deflect air flow sensor plate by hand	Ω value rises continuously up to half deflection and then drops off again	Air flow sensor position indicator (B2)
9.1	Cable	N3 B2 7 — Ω — 1	Ignition: **OFF** KE control unit (N3) disconnected	< 1 Ω	Open circuit in wiring
9.2	Cable	N3 B2 17 — Ω — 2	Ignition: **OFF** KE control unit (N3) disconnected	< 1 Ω	Open circuit in wiring
9.3	Cable	N3 B2 18 — Ω — 3	Ignition: **OFF** KE control unit (N3) disconnected	< 1 Ω	Open circuit in wiring

Test step	Test scope	Test connection	Operation/ Requirement	Specification	Possible cause/Remedy
10.0	Acceleration enrichment	set to A 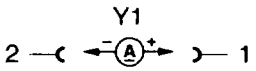	Ignition: **OFF** Connect test cable 102 589 04 63 00 to actuator (Y1) Unplug connector from coolant temperature sensor (B11/2) Lay connector to ground with 2.5 kΩ test resistor or with ohms decade (equals approx. 20°C) KAT: Unplug connector G3/2x2 of oxygen sensor Engine: **start** Engine runs at fast idling	>15 mA	Test air flow position indicator (B2) (9.0–9.4)
10.1			Increase engine speed sharply	Current level must rise	Test air flow position indicator (B2) (9.0–9.4)

Test step	Test scope	Test connection	Operation/ Requirement	Specification	Possible cause/Remedy
11.0	Fault circuit oxygen sensor (G3/2)	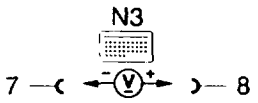	Engine: **idling**	fluctuates between 0.1–0.9 V	Oxygen sensor (G3/2), Open circuit in wiring Mixture setting, KE control unit (N3)
11.1	Insulation of oxygen sensor cable	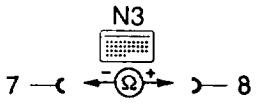	Ignition: **OFF** KE control unit (N3) and coupling (G3/2x1) disconnected	∞	Open circuit in wiring
11.2	Oxygen sensor (G3/2)		Engine: **idling**, Lambda control tester connected, coupling (G3/2x1) connected	0–10% on	Oxygen sensor (G3/2)
11.3	KE control unit (N3)	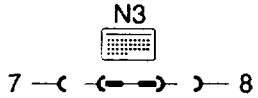	Engine: **idling**, Lambda control tester connected, coupling (G3/2x1) disconnected	90–100% on	KE control unit (N3), Open circuit in wiring

Test step	Test scope	Test connection	Operation/ Requirement	Specification	Possible cause/Remedy
11.4	Oxygen sensor heater	G3/2x1 — G3/2 1 — 1	Ignition: **OFF** Coupling (G3/2x1) disconnected		Oxygen sensor, Overvoltage protection K1/1, Fuel pump relay (N16/4), Open circuit in wiring
		G3/2x — G3/2 2 — 2	Engine: **start**	0.5–1.3 A	
11.5	Cable	1 — ⊥	Ignition: **OFF** Coupling at KE control unit (N3) disconnected	< 1 Ω	Open circuit in wiring
11.6	Cable	G3/2x1 — N16/4 2 — 7	Ignition: **OFF** Coupling (G3/2x1) disconnected	< 1 Ω	Open circuit in wiring

Test step	Test scope	Test connection	Operation/ Requirement	Specification	Possible cause/Remedy
12.0	Road speed signal	**Mod. 124, 201, 129** N3 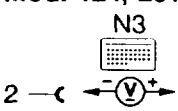 2 — 6 **Mod. 107, 126** N3 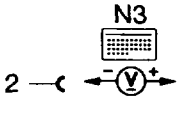 2 — 24	Ignition: **ON** **Models 107, 126, 129:** drive vehicle on dynamometer (>20 km/h) **Models 124, 201** roll vehicle about 1 m	Models 124, 201 readout fluctuates 0–12 V without components 0–9 V with components Models 107, 126 >1 V	Models 124, 201 Wiring, Hall-effect sensor (B6) Models 107, 126, 129 Wiring, Electronic speedometer Test see Group 54
12.1	KE control unit (N3)	Connect to X11	Drive vehicle in 3rd gear/ Drive position 3 on road/ dynamometer, accelerate fully at approx. 2000/min (approx. 6s)	On/off ratio fluctuates after accelerator released	Readout 60%: Replace KE control unit (N3)
12.2	Cable	**Models 124, 201 with multi-pin plug connection** N3 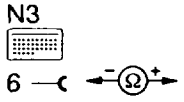 X53/5 6 —	Ignition: **OFF** Disconnect X53/5x	<1 Ω	Open circuit in wiring

Test step	Test scope	Test connection	Operation/ Requirement	Specification	Possible cause/Remedy
12.3	Cable	**Models 124, 201 without multi-pin plug connection** N3 B6 6 — Ω — G	Ignition: **OFF** B6x disconnected	< 1 Ω	Open circuit in wiring
12.4	Cable	**Models 107, 126** N3 (A2) X30/1 6 — Ω — 3 **Model 129** N3 A1p8 6 — Ω — 1	X30/1 disconnected	< 1 Ω	Open circuit in wiring Test see Group 54
13.0	Hall-effect road speed sensor (B6)	(USA) **Models 124, 201** N3 2 — V — 6	Coupling at KE control unit (N3) disconnected, Ignition: **ON** Roll vehicle approx. 1m	Readout fluctuates 0–12 V	Wiring, replace Hall-effect sensor (B6) if necessary
13.1	Cable	B6 ⊥ — V — 1	Ignition: **ON**	11–14 V	Fuse, Open circuit in wiring
13.2	Cable	B6 N3 G — Ω — 6	Ignition: **OFF**	< 1 Ω	Open circuit in wiring
13.3	Cable	B6 2 — Ω — ⊥	Ignition: **OFF**	< 1 Ω	Open circuit in wiring

Test step	Test scope	Test connection	Operation/ Requirement	Specification	Possible cause/Remedy
14.0	TD signal	N3 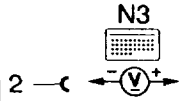 2 — 25	Ignition: **ON** Engine idling at operating temperature, KE control unit (N3) connected	6–12 V	EZL ignition control unit (N1/2), Wiring
14.1	Cable	N16/3 — N3 10 — 25	Ignition: **OFF** Remove fuel pump relay (N16/3 or N16/4)	< 1 Ω	Open circuit in wiring
14.2	Cable	N16/3 — X11 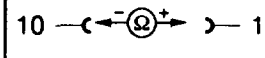 10 — 1	Ignition: **OFF**	< 1 Ω	Open circuit in wiring
14.3	Cable	X11 — N1/2 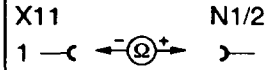 1 — TD	Ignition: **OFF** Disconnect coupling (TD signal) at ignition control unit (N1/2)	< 1 Ω	Open circuit in wiring

Test step	Test scope	Test connection	Operation/ Requirement	Specification	Possible cause/Remedy
15.0	Fault circuit intake air temperature sensor (B17/2)	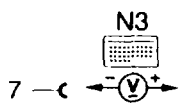	Engine: **idling**, KE control unit (N3) connected	At +20° C 1.32–1.62 V, other values see table temperature sensor (B17/2)	Intake air temperature sensor (B17/2), Open circuit in wiring
15.1	Intake air temperature sensor (B17/2)	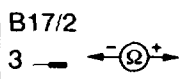	Ignition: **OFF** Coupling at temperature sensor (B17/2) disconnected	See diagram temperature sensor (B17/2)	Intake air temperature sensor (B17/2)
15.2	Cable	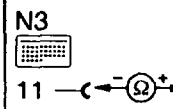	Ignition: **OFF** Coupling at temperature sensor (B17/2) disconnected	< 1 Ω	Open circuit in wiring
15.3	Cable	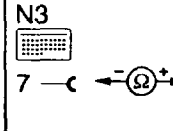	Ignition: **OFF** Coupling at temperature sensor (B17/2) disconnected	< 1 Ω	Open circuit in wiring

Test step	Test scope	Test connection	Operation/ Requirement	Specification	Possible cause/Remedy
16.0	Altitude correction sensor (B18)	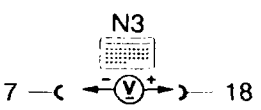	Ignition: **ON** KE control unit (N3) connected	5 V	Altitude correction sensor (B18), Air flow sensor position indicator (B2), KE control unit (N3), Open circuit in wiring
16.1	Altitude correction sensor (B18)	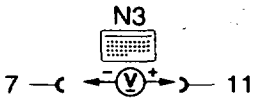	Ignition: **ON** KE control unit (N3) connected	See table altitude sensor (B18) "n"	Altitude correction sensor (B18), Open circuit in wiring
16.2	Cable	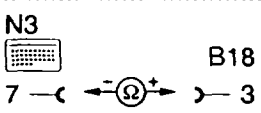	Ignition: **OFF** Disconnect coupling at altitude correction sensor (B18)	< 1 Ω	Open circuit in wiring
16.3	Cable	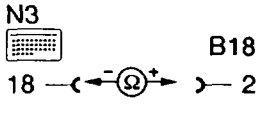	Ignition: **OFF** Disconnect coupling at altitude correction sensor (B18)	< 1 Ω	Open circuit in wiring
16.4	Cable	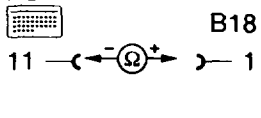	Ignition: **OFF** Disconnect coupling at altitude correction sensor (B18)	< 1 Ω	Open circuit in wiring

Test step	Test scope	Test connection	Operation/ Requirement	Specification	Possible cause/Remedy
17.0	Decel fuel shutoff	Connect to (X11)	Lambda control fluctuates. Increase engine speed to approx. 3500/min, then close throttle valve	On/off ratio jumps briefly to 95%	Check accelerator control setting, Check throttle valve switch setting, Microswitch, Wiring
17.1	Microswitch	N3 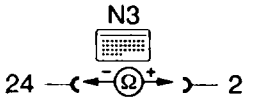 24 — 2	Idle position Depress accelerator	< 1 Ω ∞	Microswitch, Wiring
17.2	Test current at electro-hydraulic actuator (Y1)	Y1 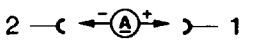 2 — 1	Connect test cable 102 589 04 63 00 to electro-hydraulic actuator. Increase engine speed to approx. 3500/min, then close throttle valve	approx. –60 mA until combustion resumed	See test steps 1.0 to 4.0, otherwise replace KE control unit

i. With fault diagnosis by means of on/off ratio and on-board diagnosis system, as of model year 1990

1 On-board diagnosis

Only (USA) California
All exhaust-relevant components of the KE fuel injection system and of the exhaust gas recirculation system are monitored by the control unit. Malfunctions caused by open circuit in wiring or failure of one of these components are indicated by the indicator lamp in the "CHECK ENGINE" instrument cluster and at the same time stored in the KE control ulnit.

Reading fault memory with push-button switch and LED
A test coupling (X11/4) with pushbutton (2) and LED (4) is provided for this purpose on the right of the component compartment partition wall. When the pushbutton is pressed (ignition: **ON**) for between 2 and 4 seconds, the flash pulse output is initiated and the fault path indicated by the number of flashes.

At the completion of the flash pulse output, the LED shows a steady light. If the pushbutton is once again pressed for between 2 and 4 seconds, any further fault path can be indicated. If no further fault is recognized, the KE control unit switches over to on/off ratio output.

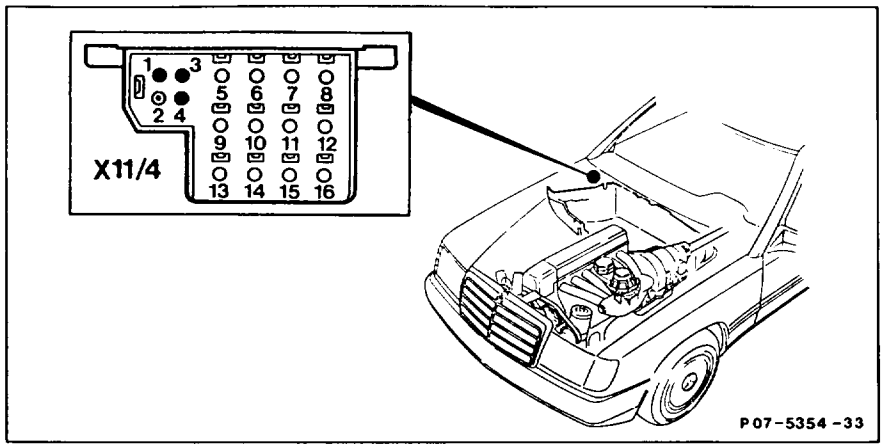

X11/4 Test coupling for diagnosis, 16-pin (flash code) Model year 1990

Erasing fault memory

Once a fault has been rectified without having disconnected the KE control unit, the fault memory must be erased as follows:

- Press pushbutton switch for 6–8 seconds with the flash pulse output displayed.

Note

Each fault displayed must be erased individually.

- LED flashes once, stored fault has been erased.

Reading fault memory with pulse counter
Connect pulse counter to test coupling (X11/4) for this purpose.

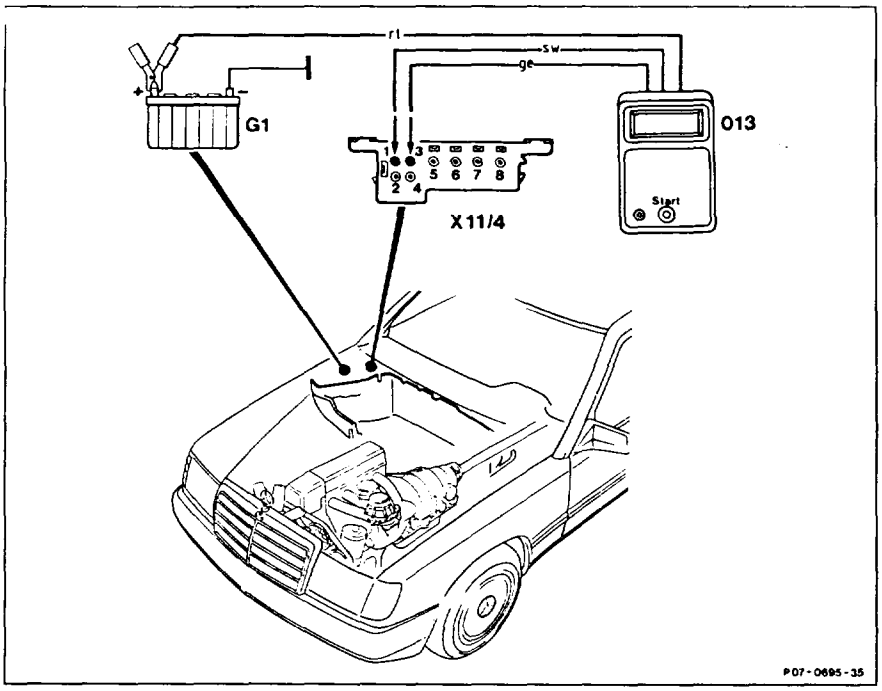

013 Pulse counter
G1 Battery
X11/4 Test coupling for diagnosis, 8-pin (flash code)

- If the LED U_{BATT} appears after connecting, pulse counter and voltage supply for pulse counter are in order.
- Press start button for between 2 and 4 seconds.
- Read off pulse output display and note. The figure 1 indicates no fault is stored in the system. All other figures are assigned to a certain fault group. If there are several faults in the system, the fault with the lowest pulse count is output first of all. Numbers from 1 to 12 appear in the display field of the pulse counter.
- Once again press start button for between 2 and 4 seconds, note any further fault. If there is no further fault in the system, no further display appears.

- Rectify noted faults (pulse display) according to troubleshooting diagram. Connect contact box as stated in the connection diagram for this purpose.

The test steps listed in the column Remedy are contained in section "m".

Erasing fault memory
Once a fault has been rectified, the displayed pulse must be erased as follows:

- Press start button for 6–8 seconds with the pulse displayed.

Note
Each pulse displayed must be erased individually.
- No display:
  Stored fault has been erased.
- A number (>1) is displayed:
  Further faults in the system.

⚠
When dealing with an engine running complaint, the fault memory should be read and the faults noted before performing repairs as part of Op. no. 07–1100. This ensures that a distinction can be made between faults which actually occur and "simulated faults" as faults are stored when performing test work with the engine running, which may be caused by simulation or by a disconnected cable.
The fault memory must be erased after completing test work.

Table for fault recognition with pulse readout

Pulse readout	Fault circuit/Fault type	Test step/Remedy
1	No fault in system	–
2	Full load contact, throttle valve switch (S29/2) implausible	11.0–11.3
3	Coolant temperature in KE control unit (N3) implausible	12.0–12.3
4	Potentiometer voltage of air flow sensor position indicator (B2) implausible	13.0–13.6
5	Oxygen sensor signal implausible	20.0–20.8
6	Not assigned	–
7	TNA signal (engine speed signal) at KE control unit (N3) implausible	14.0–14.1
8	Altitude pressure signal from EZL ignition control unit (N1/2) implausible	18.0
9	Current to electrohydraulic actuator (Y1) implausible	10.0–10.4
10	Idle speed contact, throttle valve switch (S29/2) implausible	16.0–16.3
11	Air injection system implausible	22.0–22.6
12	Absolute pressure valves from EZL ignition control unit (N1/2) implausible	18.0
13	Intake air temperature implausible	19.0–19.3
14	Road speed signal at KE control unit (N3) implausible	17.0–17.2
15	Not assigned	–

Pulse readout	Fault circuit/Fault type	Test step/Remedy
16	Exhaust gas recirculation implausible	20.0–20.8
17	Oxygen sensor signal cable has short to positive or to ground	20.0–20.8
18	Current to idle speed air valve (Y6) implausible	24.0–24.3
19	Not assigned	–
20	Not assigned	–
21	Not assigned	–
22	Oxygen sensor heating current implausible	20.0–20.8
23	Short circuit to positive in regeneration switchover valve (Y58/1) circuit	25.0–25.4
24	Not assigned	–
25	Short circuit to positive to start valve (Y8) circuit	23.0–23.3
26	Short circuit to positive in shift point retard circuit	–
27	Fault in data interchange KE control unit (N3) ↔ EZL ignition control unit (N1/2)	18.0 [1])
28	Loose contact in coolant temperature sensor (B11/2) circuit	–
29	Difference in coolant temperatures between KE control unit (N3) ↔ EZL ignition control unit (N1/2)	12.0–12.3
30	Not assigned	–
31	Loose contact in intake air temperature sensor (B17/2) circuit	19.0–19.3
32	Not assigned	–
33	Not assigned	–
34	Coolant temperature from EZL ignition control unit (N1/2) implausible	18.0 [1])

[1]) Test matching of KE ↔ EZL control units.

Fault table pulse readout engine systems control unit MAS

Diagnosis

The faults listed below are recognized and stored in the engine systems control unit MAS. The faults remain stored even after the battery has been disconnected and connected, and also after unplugging the control unit.
The faults can be interrogated with the pulse counter on models 124 and 201 at the test coupling (X11/4), contact 14.
On model 126, the test cable set with contact box must be connected for reading the faults (test cable is not connected to an X11/4). Following this, connect black cable of pulse counter to contact 4 and yellow cable to contact 14.

The test steps listed in the column Remedy are contained in section "m".

Table for fault recognition by pulse readout

Pulse readout	Possible cause	Remedy/ Test step
1	No fault in system.	–
2	Fuel pump relay not operating.	9.0
3	TD signal interrupted (N.A. as of 05/90).	15.0–15.2
4	Output stage for oxygen sensor heater actuation faulty.	20.0–20.8
5	Output stage for air pump actuation faulty.	22.0–22.6
6	Output stage for kickdown switch actuation faulty.	30.0–30.1
7	Not assigned.	–
8	Coolant temperature signal.	12.0–12.3
9	Not assigned (as of approx. 05/90 open circuit in oxygen sensor heater).	20.0–20.8
10	Output stage of start valve.	23.0–23.3
11	No cut-in signal for A/C compressor.	21.0–21.2
12	Output stage for A/C compressor actuation faulty.	21.1
13	Excessive slip of A/C compressor.	21.1
14	Not assigned.	–
15	Short circuit recognition in fuel pump circuit.	8.0

Note

LED U_{BATT} must light up in display field. If not, perform the following test:

Pulse readout	Test step Test scope	Test connection	Operation/ Requirement	Specification	Possible cause/Remedy
–	1.0 Ground point	G1 (+) — V — X92 / 1	Ignition: **ON** Disconnect coupling at X92	11–14 V	Ground connection W10 loose, Open circuit in wiring from test coupling (X92) Contact 1 to W10
–	2.0 Test coupling (X92) actuation	X92 / 3 — V — X92 / 1	Ignition: **ON** Disconnect coupling at X92	0,7–2,5 V	Test coupling (X92), Open circuit in wiring
–	3.0 Cable terminal 87E	K1/1 / 2 — Ω — X92 / 2	Ignition: **OFF** Disconnect coupling at X92, Disconnect coupling at overvoltage protection (K1/1)	< 1 Ω	Open circuit in wiring
	3.1 Cable	N3 — X92 / 23 — Ω — 3	Ignition: **OFF** Disconnect coupling at X92	< 1 Ω	Open circuit in wiring
	3.2 Cable	X92 / 1 — Ω — W10 ⊥	Ignition: **OFF** Disconnect coupling at X92	< 1 Ω	Open circuit in wiring

2 With fault diagnosis by means of on/off ratio

Since 04/86 faulty input signals are recognized by the KE control unit (N3) and passed to the lambda test output. Fault recognition is performed with the lambda control tester (012) at the diagnostic socket (X11).

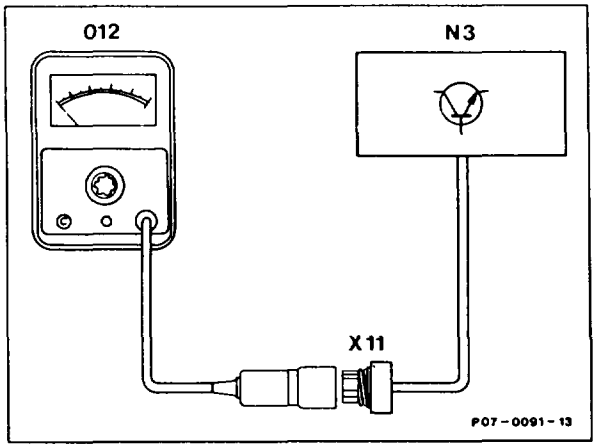

Lambda control tester	Position
Bosch	100% IR
Hermann	100% ⏦

Fault recognition enables various components of the KE fuel injection system to be checked by measuring the on/off ratio. The faults are not stored and can only be displayed directly by measuring the on/off ratio (i.e. only if the fault exists at that moment).

Ouput of on/off ratio

The output for fault diagnosis by means of the on/off ratio is performed only after the fault memory has been interrogated.
If the pulse readout is "1" or after the fault last read out, the on/off ratio output is only performed after the pushbutton switch in the diagnostic socket or at the pulse counter has once again been pressed (2–4 seconds).

Before reading the fault memory, the readout with the engine running is at 0% or 85% if the CHECK ENGINE indicator lamp lights up.

Recognition of the control units:
1 Connect lambda control tester.
2 Switch on ignition.

National version	On/off ratio readout	KE control unit
(J) and (USA) Federal	70%	w/o pulse readout
(USA) California	85%	with pulse readout

Note
The control unit is switched over to on/off ratio output for testing the lambda control by pressing the pushbutton.

For wiring diagram see appropriate wiring diagram volume (07.3–0128).

Perform test (measuring on/off ratio) for dealing with engine running complaint, e.g. irregular idling.

Readout fluctuates:
No fault in system.

Test conditions:
Battery voltage 11–14 V,
Engine oil temperature approx. 80°C,
Engine idling.

The test steps listed in the column Remedy are contained in the section "m".

Fault recognition by on/off ratio readout

On/off ratio in %	Possible cause of fault	Test scope	Test step/Remedy
0	No voltage or ground at diagnostic socket (X11). Open circuit in cable on diagnostic socket (X11), contact 3, lambda control tester faulty. Mixture setting too rich.	Test voltage supply, ground and diagnostic socket (X11) cable. Check lambda setting.	1.0–1.1 2.0–2.8 RI 07.3–2053, or 07.3–5203 for (USA)
10	Air flow sensor position indicator (B2) wrongly connected or fault. Possible fast idling. Contacts of throttle valve switch (S29/2), idle speed/full load contact wrongly connected or short circuit (full load contact closed if insufficient air throughput).	Test signal of air flow sensor position indicator (B2). Check routing of wiring.	13.0–13.6
20	Full load contact incorrectly connected or faulty. Readout 20% only if throttle valve switch (S29/2) operated.	Test full load contact.	11.0–11.3
30	Short circuit or open circuit to KE control unit (N3). Coolant temperature sensor (B11/2) faulty.	Test coolant temperature sensor (B11/2). Test wiring.	12.0–12.3

On/off ratio in %	Possible cause of fault	Test scope	Test step/Remedy
40	Open circuit in wiring or short circuit to air flow sensor position indicator (B2) or air flow sensor position indicator (B2) faulty. Possible fast idling speed.	Test air flow sensor position indicator (B2). Test KE control unit. Test wiring.	13.0–13.6
50	Oxygen sensor (G3/2) not operational or faulty. Open circuit in wiring.	Engine oil temperature approx. 80°C. Test oxygen sensor (G3/2). Test wiring.	20.0–20.8
60	Road speed signal at KE control unit (N3) implausible. [1]	Test Hall-effect sensor (B6). Test wiring.	17.0–17.2
70	No TNA signal implausible [1]. Open circuit in wiring to KE control unit (N3).	Test TNA signal.	14.0–14.1
80	Open circuit in wiring or short to ground (B17/2). Intake air temperature sensor (B17/2) faulty. Fault in data interchange between EZTL ignition control unit and KE control unit (N3).	Test intake air temperature sensor (B17/2). Test wiring.	18.0–19.3
85	Only (USA) California.	–	–

[1] The plausibility of the road speed signal can **only** be checked by the KE control unit (N3) when driving (engine output dynamometer/road). If an implausible road speed signal is recognized when driving, the control unit (N3) "sets" the on/off ratio of 60% and stores this. The fault is not erased until the ignition is switched off. A "60% on/off ratio" test is performed e.g. in dealing with the complaint: jerking when vehicle moving and throttle valve closed.

On/off ratio in %	Possible cause of fault	Test scope	Test step/Remedy
90	Current to electrohydraulic actuator (Y1) implausible [1]	Test electrohydraulic actuator	29.2
95	Decel fuel shutoff active.	–	–
100	No voltage or ground at KE control unit (N3) or KE control unit (N3) faulty. Lambda setting too lean. Oxygen sensor (G3/2) faulty (short to ground). Fuse of overvoltage protection (K1/1) faulty. Lambda control tester faulty.	Test overvoltage protection (K1/1). Test ground. Check setting of lambda control. Test oxygen sensor signal. KE control unit (N3) faulty.	1.0–1.2 2.0–2.8 RI 07.3–2053, or 07.3–5203 for (USA) 20.0–20.8
Readout fluctuates	With lambda control: No fault in the area of the monitored signals.	–	–

[1]) The plausibility of the road speed signal can **only** be checked by the KE control unit (N3) when driving (engine output dynamometer/road). If an implausible road speed signal is recognized when driving, the control unit (N3) "sets" the on/off ratio of 60% and stores this. The fault is not erased until the ignition is switched off. A "60% on/off ratio" test is performed e.g. in dealing with the complaint: jerking when vehicle moving and throttle valve closed.

j. Special tools as of model year 1990

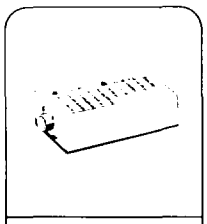

124 589 00 21 00
54

124 589 07 21 00
18

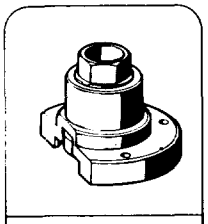

124 589 10 21 00
26

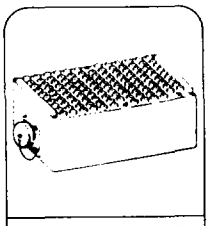

129 589 00 21 00
54

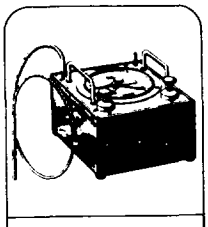

201 589 13 21 00
00 42 80

Lambda-Regelungs-tester

909 589 00 21 00

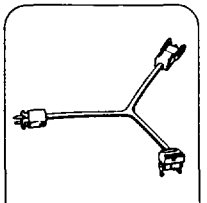

102 589 04 63 00
07

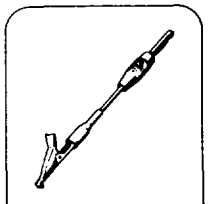

102 589 05 63 00
07

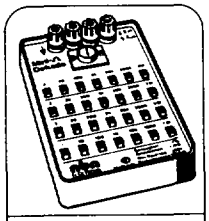

124 589 09 63 00
15 54

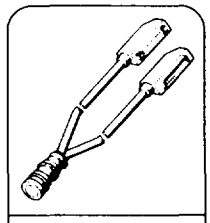

124 589 33 63 00
07 28 54

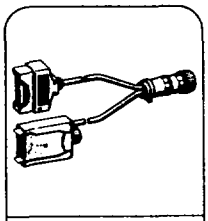

129 589 05 63 00
15

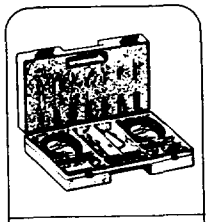

201 589 00 99 00
15 54

Commercially available tools and testers (see Workshop Equipment Manual)

Designation	e.g. Make, order no.
Multimeter	Sun, DMM-5
Twin socket	Hermann, ECD 53
Engine tester	Bosch, MOT 002.02

k. Connecting testers according to connection diagram, as of model year 1990

Models 124, 201

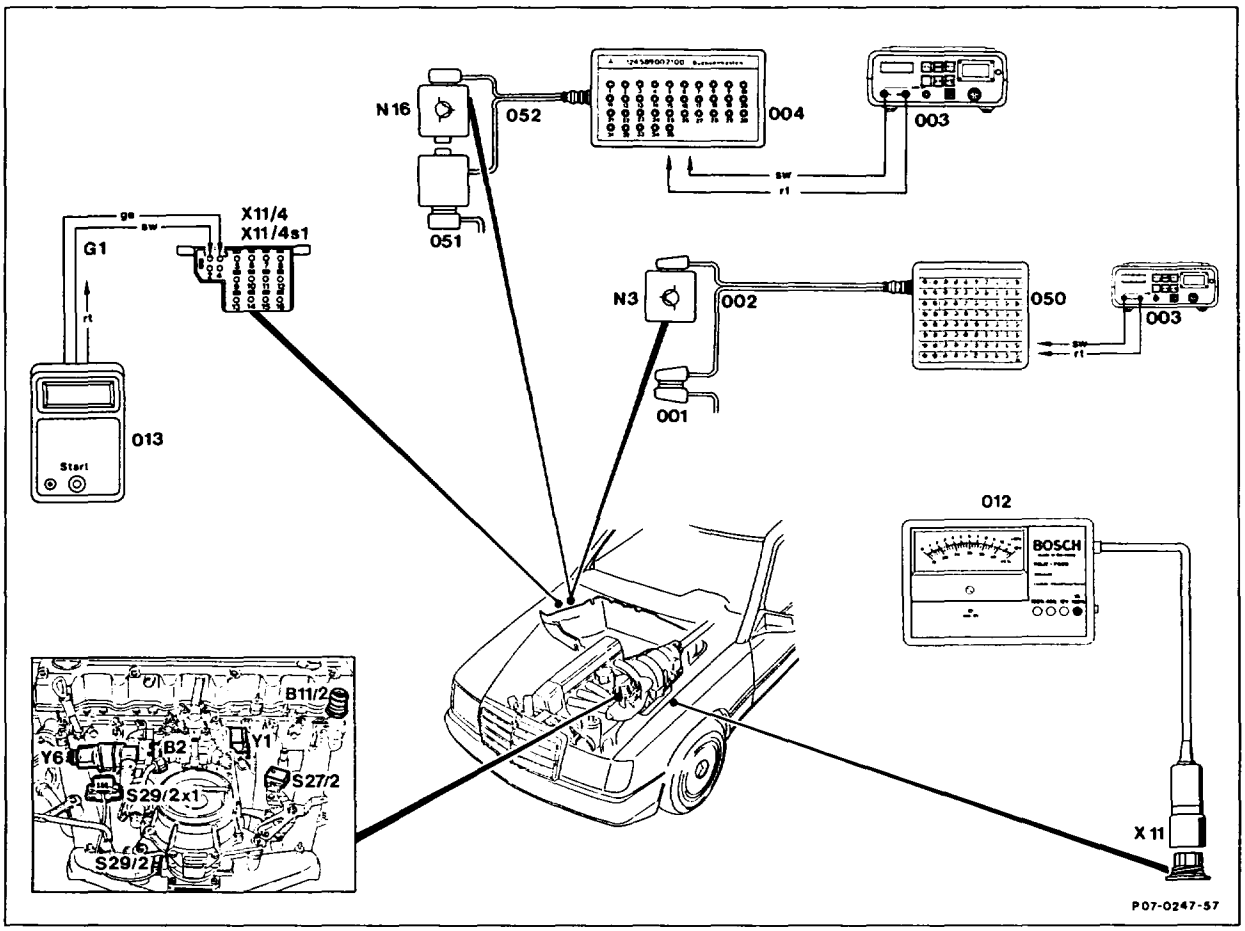

001	KE control unit coupling	G1	Battery, terminal 30
002	Test cable 104 589 00 63 00	N3	KE control unit
003	Multimeter	N16	Engine systems control unit MAS
004	35-pin contact box	X11	9-pin diagnostic socket
012	Lambda control tester	X11/4	Diagnosis test coupling
013	Pulse counter		
050	126-pin contact box		
051	Coupling, engine systems control unit		
052	Test cable 129 589 05 63 00		

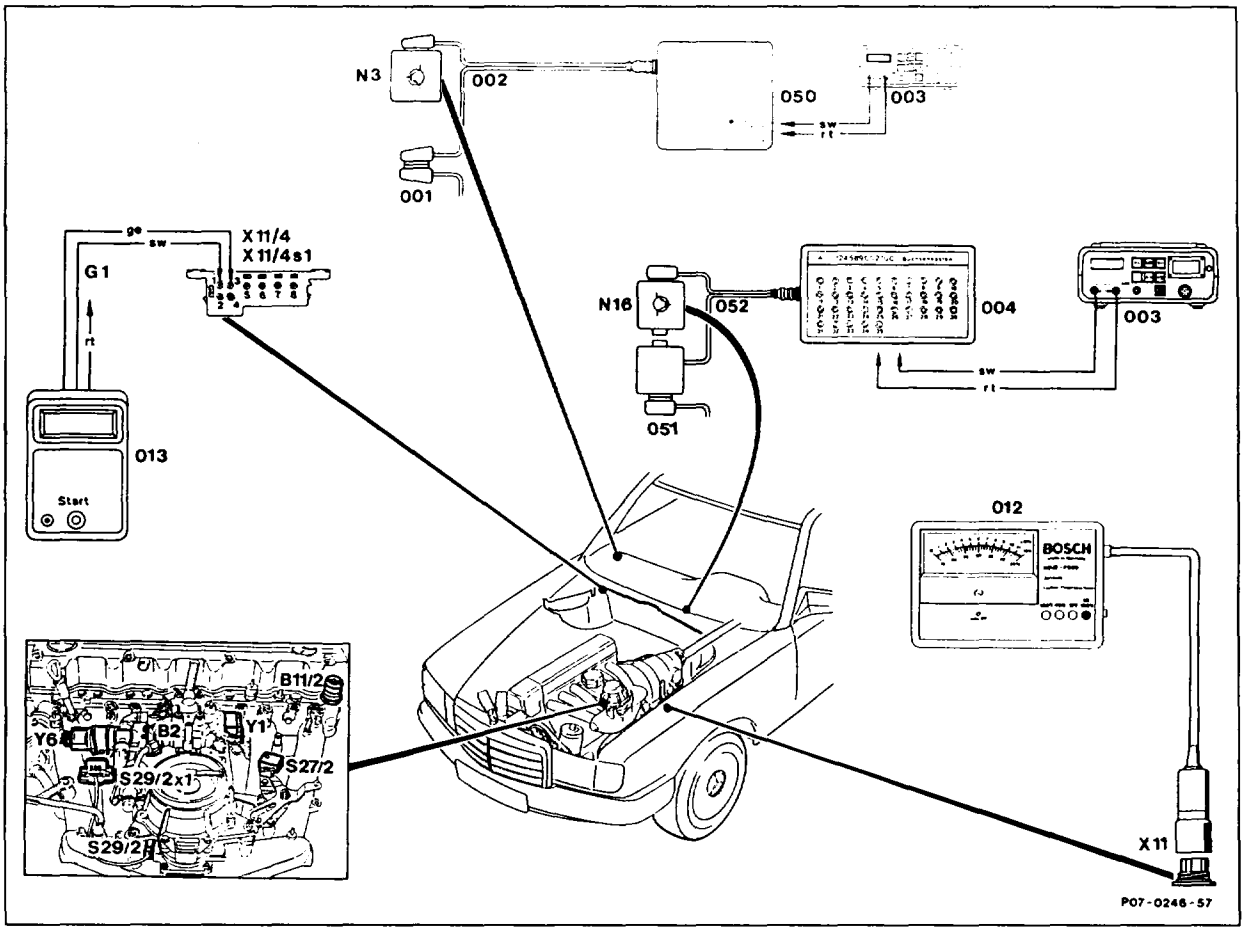

001	KE control unit coupling
002	Test cable 104 589 00 63 00
003	Multimeter
004	35-pin contact box
012	Lambda control tester
013	Pulse counter
050	126-pin contact box
051	Coupling, engine systems control unit
052	Test cable 129 589 05 63 00
G1	Battery, terminal 30
N3	KE control unit
N16	Engine systems control unit MAS
X11	9-pin diagnostic socket
X11/4	Diagnosis test coupling

I. Contact assignment of coupling of KE control unit (N3) and engine systems control unit MAS (N16), as of model year 1990

Contact assignment of coupling of KE control unit (N3)

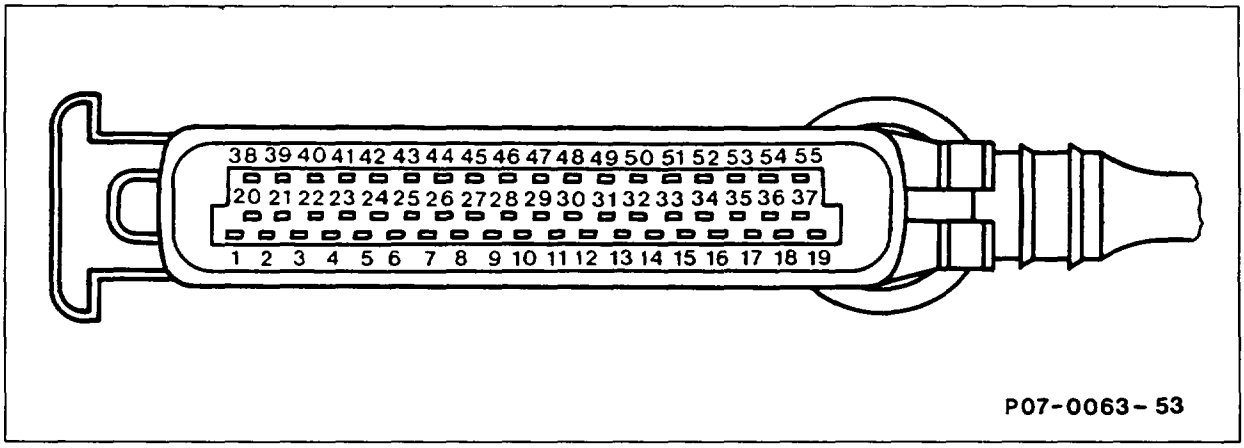

Engine 103.94/98 as of model year 1990

1	E	Voltage supply, terminal 30a
2	A	Regeneration switchover valve
3	A	Control signal, oxygen sensor heater
4	A	Idle speed air valve (+)
5	E	Intake air temperature sensor (ground)
6	E	Ground W10 (output stage)
7	A/E	Fault memory pulse output
8	A	Fuel consumption signal for vehicles with optional trip computer
9	E	Voltage supply, components
10	E	Decel fuel shutoff microswitch
11	E	Start signal, starter, terminal 50
12		–
13	E	Oxygen sensor signal
14	E	Intake air temperature sensor (signal)
15		–
16	E	Coolant temperature sensor B11/2 contact 2
17		–
18	E	Diagnosis signal, sensor heater
19	E	Ground W11 (electronics)
20	A	Start valve actuation
21		–
22		–
23	A	Idle speed air valve (–)
24	A	CHECK-ENGINE indicator lamp
25		–
26	E/A	Data interchange with N1/2
27	E	Engine speed signal (TNA)
28	E	Selecter lever position
29	E	Road speed signal
30	A	Lambda test output, on/off ratio to X11
31	A	Air flow sensor position indicator, contact 3
32	A	Oxygen sensor cable screening
33	E	–
34	E	Air flow sensor position indicator, contact 1
35	A	Ground, B11/2 contact 4
36		–
37	A	Electrohydraulic actuator (+)
38		Exhaust gas recirculation switchover valve (Y27)
39	A	Transmission shift point control
40	A	–
41	E	Voltage supply, components
42		Air pump control signal
43		–
44		–
45	E	A/C compressor cut-in signal
46	E	Throttle valve switch, full load
47	E	Throttle valve switch, idle speed
48		–
49	A	–
50		–
51		–
52	E	Air flow sensor position indicator, contact 2
53		–
54		–
55	E	Electrohydraulic actuator (–)

A	Ouput signal
E	Input signal

Contact assignment of coupling of engine systms control unit MAS (N16)

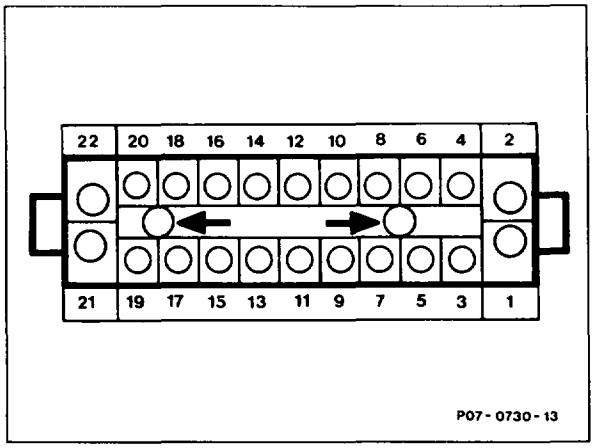

Engine 103.94/98 as of model year 1990

1E	Voltage supply, terminal 30 (battery)	14A	Diagnosis pulse output
2A	Fuel pumps actuation	15	Not assigned
3E	A/C compressor control signal	16E	TD signal from EZL/AKR ignition control unit
4E	Terminal 31, ground	17E	Air pump control signal
5E	Engine speed signal (+) for A/C compressor	18	Not assigned
6E	Engine speed signal (–) for A/C compressor	19A	Air pump actuation
7E	Kickdown cutoff	20A	Oxygen sensor heater actuation
8A	Start valve actuation	21E	Voltage supply, terminal 15 fused (ignition)
9A	A/C compressor cut-in signal (to KE control unit)	22A	A/C compressor coupling actuation
10E	Voltage supply terminal 15 unfused (ignition)		
11A	TDA signal of engine speed	A	Ouput signal
12E	Start signal (terminal 50)	E	Input signal
13E	Coolant temperature sensor	Arrow	Anti-twist protection

m. Test program with contact box, as of model year 1990

Symbols for testers

Contact box

Lambda control tester

Multimeter

Battery

Contact

Connector

Bridge

Symbols for test mode with multimeter

Voltage measurement (volts, DC)

Current measurement (amperes, DC)

Resistance measurement (ohms)

Note

If the on/off ratio readout is constant, first of all perform test steps 1–3. If the specification of a test step is in order, e.g. step 4, it is not necessary to perform test step 4.1.

If the test values at the throttle valve switch (S29/2) are achieved in test step 12 during part load mixture adapatation, full load enrichment is also active.

As of model year 1992 the CHECK ENGINE indicator lamp is no longer fitted to (USA) Federal.

Test step	Test scope	Test connection	Operation/ Requirement	Specification	Possible cause/Remedy
1.0	Ground points	N3 X4/10 19 — (V) — tml.30	Ignition: **ON**	11–14 V	Ground connection (W11), Open circuit in wiring
1.1	Ground points	N3 X4/10 6 — (V) — tml.30	Ignition: **ON**	11–14 V	Ground connection (W10), Open circuit in wiring
2.0	Voltage supply from KE control unit (N3)	N3 19 — (V) — 1	Ignition: **ON**	11–14 V	Fuse in overvoltage protection (K1/1), Overvoltage protection (K1/1) faulty or not connected, Open circuit in wiring
2.1	Cable from terminal 30 overvoltage protection (K1/1)	N3 K1/1 19 — (V) — 1	Ignition: **OFF**	11–14 V	Open circuit in wiring
2.2	Voltage supply from KE control unit (N3)	N3 K1/1 1 — (Ω) — 4	Ignition: **OFF** K1/1 disconnected	<1 Ω	Open circuit in wiring
3.0	Voltage supply of components from KE control unit terminal 87E	N3 19 — (V) — 41	Ignition: **ON** K1/1 connected	11–14 V	Connected components have short to terminal 31, open circuit in wiring to overvoltage protection (K1/1)

Test step	Test scope	Test connection	Operation/ Requirement	Specifi-cation	Possible cause/Remedy
4.0	Ground at engine systems control unit (N16)	N16 X4/10 4 — tml.30	Ignition: **ON**	11–14 V	Ground connection, Open circuit in wiring
5.0	Voltage supply of engine systems control unit (N16) terminal 30	N16 4 — 1	Ignition: **ON**	11–14 V	Open circuit in wiring
6.0	Voltage supply of engine systems control unit (N16) terminal 15 unfused	N16 4 — 10	Ignition: **ON**	11–14 V	Cable connection at fuse box (F1) loose, Open circuit in wiring
7.0	Voltage supply of engine systems control unit (N16) terminal 15	N16 4 — 21	Ignition: **ON**	11–14 V	Cable connection at fuse box (F1) loose, Open circuit in wiring
8.0	Operation of fuel pumps (M3m1/ M3m2)	N16 2 — 21	Ignition: **ON** Engine systems control unit (N16) disconnected	**Model 126** 6–10 A **Models 124, 201** 4–8 A	Fuel pumps (M3) Open circuit in wiring

Test step	Test scope	Test connection	Operation/ Requirement	Specification	Possible cause/Remedy
9.0	Actuation of fuel pumps (M3m1/ M3m2)	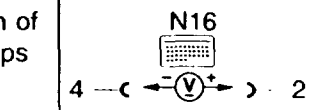	Engine systems control unit (N16) connected. Control cable coupling 1 at ignition control unit disconnected. Engine: **start**	10 ± 2 V during starting	Open circuit in wiring Relay box (F1) loose
10.0	Test current at electrohydraulic actuator (Y1)	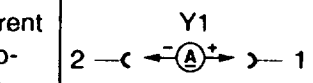	Ignition: **ON** Connect test cable 102 589 04 63 00 to electrohydraulic actuator (Y1)	20 mA	Test wiring to KE control unit (N3), Electrohydraulic actuator
10.1	Fault circuit electrohydraulic actuator (Y1)		Ignition: **OFF** Coupling at KE control unit disconnected	19.5 ± 1 Ω	Electrohydraulic actuator (Y1), Wiring
10.2	Electrohydraulic actuator (Y1)	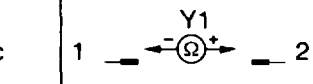	Coupling at electrohydraulic actuator (Y1) disconnected	19.5 ± 1 Ω	Electrohydraulic actuator (Y1)
10.3	Wiring	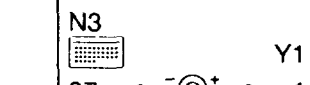	Coupling at electrohydraulic actuator (Y1) disconnected	< 1 Ω	Open circuit in wiring, Cable in coupling (Y1) wrongly connected (see wiring diagram)
10.4	Wiring	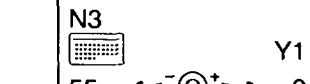	Coupling at electrohydraulic actuator (Y1) disconnected	< 1 Ω	Open circuit in wiring, Cable in coupling (Y1) wrongly connected (see wiring diagram)

Test step	Test scope	Test connection	Operation/ Requirement	Specification	Possible cause/Remedy
11.0	Fault circuit full load contact of throttle valve switch (S29/2)	N3 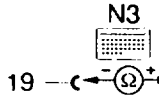 19 — 46	Ignition: **OFF** KE control unit disconnected		
			Accelerator in idle speed position	∞	Full load contact throttle valve switch (S29/2), contacts (S29/2x1)wrongly connected, Open circuit in wiring
			Accelerator in full throttle position	< 1 Ω	
11.1	Full load contact of throttle valve switch (S29/2)	S29/2x1 2 — 3	Ignition: **OFF** KE control unit disconnected		
			Accelerator in idle speed position	∞	Adjust or replace throttle valve switch (S29/2)
			Accelerator in full throttle position	< 1 Ω	
11.2	Wiring	N3 S29/2x1 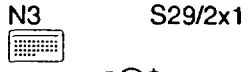 46 — 3	Ignition: **OFF**	< 1 Ω	Open circuit in wiring
11.3	Wiring	S29/2x1 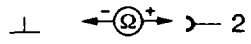 ⊥ — 2	Ignition: **OFF**	< 1 Ω	Open circuit in wiring to (W11), ground connection (W11) loose

Test step	Test scope	Test connection	Operation/ Requirement	Specification	Possible cause/Remedy
12.0	Fault circuit coolant temperature sensor (B11/2)	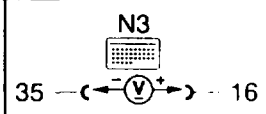	Ignition: **ON**	See table temperature sensor	Coolant temperature sensor (B11/2), Wiring, KE control unit (N3)
12.1	Coolant temperature sensor (B11/2)	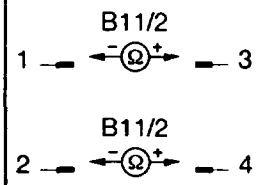	Ignition: **OFF** Coupling at temperature sensor disconnected. Measure temperature sensor connections diagonally and compare both readings [1]).	See table temperature sensor, both readings must be identical	Replace temperature sensor (B11/2)
12.2	Wiring	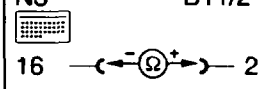	Ignition: **OFF** Coupling at KE control unit disconnected Connector contact assignment B11/2.	< 1 Ω	Open circuit in wiring
12.3	Wiring	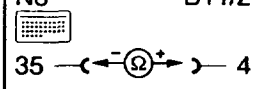	Ignition: **OFF** Coupling at KE control unit disconnected	< 1 Ω	Open circuit in wiring
13.0	Fault circuit air flow sensor position indicator (B2)	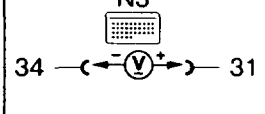	Engine: **idling**	4.6–5.1 V	Air flow sensor position indicator (B2), KE control unit (N3)
13.1	Fault circuit air flow sensor position indicator (B2)	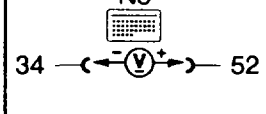	Engine: **idling** at operating temperature	0.55–0.95 V	Air flow sensor position indicator (B2), KE control unit (N3), Wiring

[1]) see section "q".

Test step	Test scope	Test connection	Operation/ Requirement	Specification	Possible cause/Remedy
13.2	Air flow sensor position indicator (B2)	B2 1 — Ω — 3	Ignition: **OFF** Coupling at air flow sensor position indicator (B2) disconnected	3.6–4.4 kΩ	Replace air flow sensor position indicator (B2)
13.3	Air flow sensor position indicator (B2)	B2 1 — Ω — 2	Slowly deflect air flow sensor plate by hand	Ω value rises continuously up to 2/3 of deflection and then drops off again	Replace air flow sensor position indicator (B2)
13.4	Wiring	N3 B2 34 — Ω — 1	Ignition: **OFF**	< 1 Ω	Open circuit in wiring
13.5	Wiring	N3 B2 31 — Ω — 3	Ignition: **OFF**	< 1 Ω	Open circuit in wiring
13.6	Wiring	N3 B2 52 — Ω — 2	Ignition: **OFF**	< 1 Ω	Open circuit in wiring
14.0	TNA signal	N3 19 — V — 27	Engine: **idling**	5–7 V	Engine systems control unit (N16), Cable, EZL/AKR control unit, other connected components faulty
14.1	Wiring	N16 N3 11 — Ω — 27	Ignition: **OFF**	< 1 Ω	Open circuit in wiring

Test step	Test scope	Test connection	Operation/ Requirement	Specification	Possible cause/Remedy
15.0	TN signal	N16 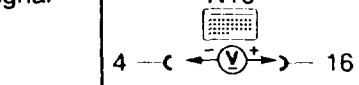 4 — 16	Engine: **idling**	6–12 V	EZL ignition control unit (N1/2), Open circuit in wiring
15.1	Cable TN signal	N1/2 (A) N16 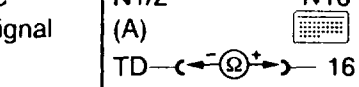 TD — 16	Ignition: **OFF** Coupling "A" of ignition control unit N1/2 disconnected	< 1 Ω	Open circuit in wiring
15.2	Engine systems control unit (N16)	N16 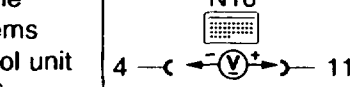 4 — 11	Coupling "A" (N1/2) connected, Engine: **idling**	6–12 V	Engine systems control unit (N16)
16.0	Fault circuit idle contact of throttle valve switch (S29/2)	N3 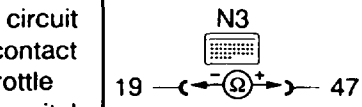 19 — 47	Ignition: **OFF** KE control unit and coupling "B" of ignition control unit (N1/2) disconnected, Accelerator in idle position Depress accelerator	< 1 Ω ∞	Idle speed contact, Open circuit in wiring
16.1	Idle contact	S29/2x1 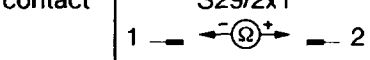 1 — 2	Ignition: **OFF** Coupling (S29/2x1) disconnected, Accelerator in idle position Depress accelerator	< 1 Ω ∞	Adjust or replace throttle valve switch (S29/2)

Test step	Test scope	Test connection	Operation/ Requirement	Specification	Possible cause/Remedy
16.2	Wiring	N3 S29/2x1 47 — Ω — 1	Ignition: **OFF** Coupling (S29/2x1) disconnected	< 1 Ω	Open circuit in wiring
16.3	Wiring	W11 S29/2x1 ⊥ — Ω — 2	Ignition: **OFF** Coupling (S29/2x1) disconnected	< 1 Ω	Open circuit in wiring to (W11), Ground connection (W11) loose
17.0	Road speed signal	N3 19 — V — 29	Ignition: **ON** Drive vehicle onto brake dynamometer or run on output dynamometer (>20 km/h) or	>1 V	Wiring
	Models 124, 201		Move vehicle back and forward	Voltage jumps from 0 V to 12 V and vice versa (only models 124 and 201)	
17.1	Wiring	**Models 124, 201** N3 X53/5 29 — Ω — 3	Ignition: **OFF** Coupling (X53/5) disconnected	< 1 Ω	Open circuit in wiring, Test Hall-effect sensor
17.2	Wiring	**Model 126** N3 A1p8 29 — Ω — 1	Ignition: **OFF** Coupling (A1p8) disconnected	<1 Ω	Open circuit in wiring, Test electronic speedometer

Test step	Test scope	Test connection	Operation/ Requirement	Specification	Possible cause/Remedy
18.0	Data line KE control unit ↔ EZL ignition control unit	N3 N1/2 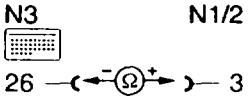 26 — 3	Ignition: **OFF** Coupling "B" at EZL ignition control unit (N1/2) disconnected	< 1 Ω	Open circuit in wiring KE control unit (N3), EZL ignition control unit (N1/2)
19.0	Fault circuit intake air temperature sensor (B17/2)	N3 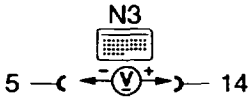 5 — 14	Ignition: **ON**	See table temperature sensor	Coolant temperature sensor (B17/2), Wiring, KE control unit (N3)
19.1	Intake air temperature sensor (B17/2)	B17/2 2 — 3	Ignition: **OFF** Coupling (B17/2) disconnected	See table temperature sensor	Replace coolant temperature sensor (B17/2)
19.2	Wiring	N3 B17/2 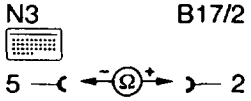 5 — 2	Ignition: **OFF** Coupling (B17/2) disconnected	< 1 Ω	Open circuit in wiring
19.3	Wiring	N3 B17/2 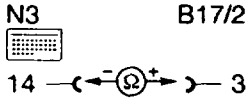 14 — 3	Ignition: **OFF** Coupling (B17/2) disconnected	< 1 Ω	Open circuit in wiring
20.0	Fault circuit oxygen sensor	N3 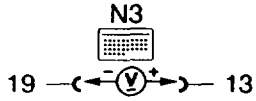 19 — 13	Engine: **idling** at operating temperature	Fluctuates between 0.1–0.9 V	Oxygen sensor, Open circuit in wiring, KE control unit (N3), Mixture setting
20.1	Insulation oxygen sensor cable	N3 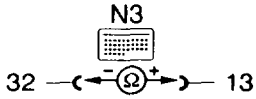 32 — 13	Ignition: **OFF** Coupling at KE control unit and coupling (G3/2x2) disconnected	∞	Open circuit in wiring

Test step	Test scope	Test connection	Operation/ Requirement	Specification	Possible cause/Remedy
20.2	Oxygen sensor cable	N3 G3/2x2 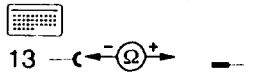 13 — Ω —	Ignition: **OFF** Coupling (G3/2x2) disconnected	< 1 Ω	Open circuit in wiring
20.3	Oxygen sensor	N3 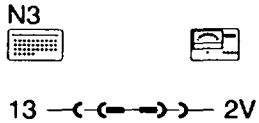 13 — 2V	Coupling at KE control unit connected Engine: **idling** Lambda tester connected Coupling (G3/2x2) connected	Runs 0–10% on lambda tester	Oxygen sensor
	KE control unit	N3 13 — 6	Engine: **idling** Lambda tester connected Coupling (G3/2x2) disconnected	Runs 90–100% on lambda tester	KE control unit (N3) faulty
20.4	Control signal oxygen sensor heater	N3 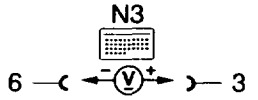 6 — V — 3	Engine: **idling**	11–14 V	KE control unit (N3) Cable
20.5	Cable	N3 N16 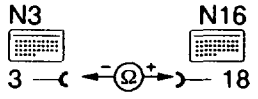 3 — Ω — 18	Ignition: **OFF**	< 1 Ω	Open circuit in wiring
20.6	Oxygen sensor heater	N16 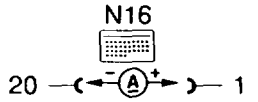 20 — A — 1	Engine systems control unit (N16) disconnected Coupling (G3/2x1) connected	0.5–1.7 A	Oxygen sensor (G3/2) Open circuit in wiring

Test step	Test scope	Test connection	Operation/ Requirement	Specification	Possible cause/Remedy
20.7	Cable	G3/2x1 N16 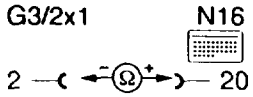 2 — Ω — 20	Ignition: **OFF** Engine systems control unit (N16) disconnected, coupling (G3/2x1) disconnected	< 1 Ω	Open circuit in wiring
20.8	Cable	G3/2x1 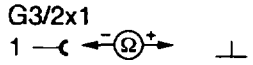 1 — Ω — ⊥	Ignition: **OFF** Coupling (G3/2x1) disconnected	< 1 Ω	Open circuit in wiring
21.0	A/C compressor cut-in signal	N3 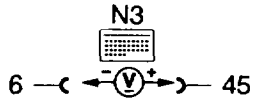 6 — V — 45	Engine: **idling** Air conditioner **"switch on"**	8–12 V	Open circuit in wiring Engine systems control unit (N16), A/C compressor see Group 83
21.1	A/C compressor actuation	N16 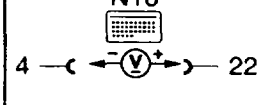 4 — V — 22	Engine: **idling** Air conditioner **"switch on"**	11–14 V	Engine systems control unit (N16)
21.2	Cable	N16 N3 9 — Ω — 45	Ignition: **OFF**	< 1 Ω	Open circuit in wiring
22.0	Air injection control signal	N16 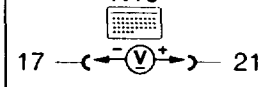 17 — V — 21	Coupling of coolant temperature sensor (B11/2) disconnected and simulate with 2.5 kΩ. [1] Engine: **idling**	110 s 11–14 V	Open circuit in wiring KE control unit (N3)
22.1	Cable	N3 N16 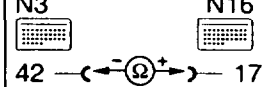 42 — Ω — 17	Ignition: **OFF**	< 1 Ω	Open circuit in wiring

[1]) Two resistance decades: contact 1 – contact 3, contact 2 – contact 4.

Test step	Test scope	Test connection	Operation/ Requirement	Specification	Possible cause/Remedy
22.2	Air pump actuation	N16 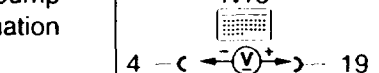 4 — 19	Coupling of coolant temperature sensor (B11/2) disconnected and simulate with 2.5 kΩ. [1] Engine: **idling** Air hose downstream of non-return valve detached	110 s 11–14 V Perceptible air flow at air hose	Engine systems control unit (N16) Air pump, Air hose, Switchover valve (Y32) see Group 14
22.3	Air pump electric switchover valve (Y32)	Y32 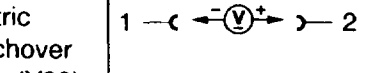 1 — 2	Coupling of coolant temperature sensor (B11/2) disconnected and simulate with 2.5 kΩ. [1]	110 s 11–14 V	Open circuit in wiring
22.4	Switchover valve (Y32)	Y32 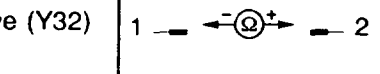 1 — 2	Ignition:**OFF** Coupling at switchover valve disconnected	25 ± 5 Ω	Switchover valve (Y32)
22.5	Actuation of air pump electromagnetic clutch (Y33)	Y33 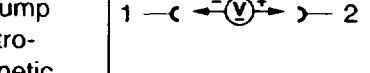 1 — 2	Coupling of coolant temperature sensor (B11/2) disconnected and simulate with 2.5 kΩ. [1]	110 s 11–14 V	Open circuit in wiring
22.6	Air pump electromagnetic clutch (Y33)	Y33 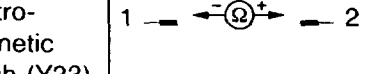 1 — 2	Ignition:**OFF** Coupling at air pump electromagnetic clutch disconnected	5 ± 1 Ω	Air pump electromagnetic clutch (Y33)

[1]) Two resistance decades: contact 1 – contact 3, contact 2 – contact 4.

Test step	Test scope	Test connection	Operation/ Requirement	Specification	Possible cause/Remedy
23.0	Start valve (Y8) actuation	N3 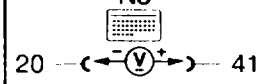 20 — 41	Coolant temperature sensor coupling (B11/2) disconnected and simulate with 10 kΩ. [1] Engine: **start**	Briefly 10 ± 2 V	KE control unit (N3), Coolant temperature sensor (B11/2), Start valve (Y8), Open circuit in wiring
23.1	Start valve (Y8)	Y8 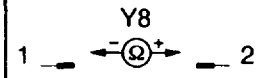 1 — 2	Start valve (Y8) coupling disconnected	10–15 Ω	Replace start valve (Y8)
23.2	Cable	N3 Y8 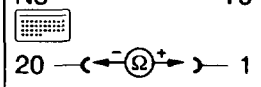 20 — 1	Ignition: **OFF**	< 1 Ω	Open circuit in wiring
23.3	Cable	N3 Y8 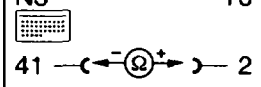 41 — 2	Ignition: **OFF**	< 1 Ω	Open circuit in wiring
24.0	Test current at idle speed air valve (Y6)	Y6 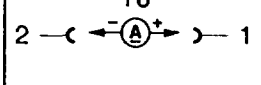 2 — 1	Connect test cable 102 589 04 63 00 to idle speed air valve (Y6) Engine: **idling** at operating temperature	600 ± 50 mA	Open circuit in wiring to idle speed air valve (Y6), KE control unit (N3)
			Air conditioning **"switch on"**	approx. 50 mA higher than before without air conditioner	
			Drive mode engaged	approx. 20 mA less than before without Drive mode	

1) Between contact 1 and contact 3.

Test step	Test scope	Test connection	Operation/ Requirement	Specification	Possible cause/Remedy
24.1	Resistance at idle speed air valve (Y6)	Y6 1 — Ω — 2	Ignition: **OFF**	7.5–10 Ω	Idle speed air valve (Y6)
24.2	Cable	N3 Y6 23 — Ω — 1	Ignition: **OFF**	< 1 Ω	Open circuit in wiring
24.3	Cable	N3 Y6 4 — Ω — 2	Ignition: **OFF**	< 1 Ω	Open circuit in wiring
25.0	Operation of regeneration	Vacuum/over-pressure tester connected to regeneration switchover valve (Y58/1)	Regeneration line from activated charcoal filter detached at regeneration valve Engine: **idling** Slowly increase engine speed to max. 3000/min	Rising engine speed, rising vacuum	KE control unit (N3), Regeneration switchover valve (Y58/1), Open circuit in wiring, Vacuum lines, Coolant temperature sensor (B11/2), see test steps 6.0–6.3
25.1	Actuation of regeneration switchover valve (Y58/1)	N3 2 — V — 41	Engine: **idling** Set engine speed > 800/min	11–14 V	KE control unit (N3), Regeneration valve (Y58/1) Wiring
25.2	Regeneration switchover valve (Y58/1)	Y58/1 1 — Ω — 2	Ignition: **OFF** Coupling at switchover valve (Y58/1) disconnected	25 ± Ω	Regeneration valve (Y58/1)

Test step	Test scope	Test connection	Operation/ Requirement	Specification	Possible cause/Remedy
25.3	Wiring	N3 Y58/1 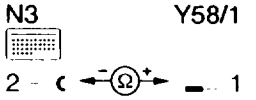 2 — 1	Ignition: **OFF** Coupling at regeneration valve (Y58/1) disconnected	< 1 Ω	Open circuit in wiring
25.4	Wiring	N3 Y58/1 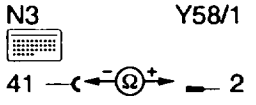 41 — 2	Ignition: **OFF** Coupling at regeneration valve (Y58/1) disconnected	< 1 Ω	Open circuit in wiring
26.0	Actuation terminal 50	N3 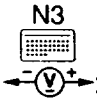 6 — 11	Engine: **start**	9–12 V	Open circuit in wiring to starter terminal 50
27.0	ARF valve (static)	Vacuum tester connected to ARF valve	Apply 500 mbar vacuum Detach vacuum line at ARF valve	ARF valve closes audibly	ARF valve
27.1	ARF valve (dynamic)	Vacuum tester connected to ARF valve	Engine: **idling** Engine speed > 1000/min	> 400 mbar	Vacuum lines, Vacuum supply, Switchover valve, Throttle valve body
28.0	Actuation ARF switch-over valve (Y27)	N3 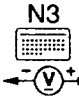 38 — 41	Engine: **idling** Set engine speed > 3000/min	approx. 12 V	KE control unit (N3), ARF switchover valve (Y27), Open circuit in wiring
28.1	ARF switch-over valve (Y27)	Y27 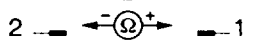 2 — 1	Ignition: **OFF**	30 ± 5 Ω	ARF switchover valve (Y27)

Test step	Test scope	Test connection	Operation/ Requirement	Specification	Possible cause/Remedy
28.2	Cable	N3 Y27 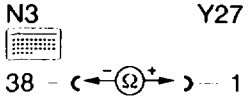 38 — 1	Ignition: **OFF** Coupling at switchover valve (Y27) disconnected	< 1 Ω	Open circuit in wiring
28.3	Cable	N3 Y27 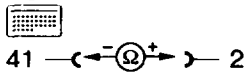 41 — 2	Ignition: **OFF** Coupling at switchover valve (Y27) disconnected	< 1 Ω	Open circuit in wiring
29.0	Decel fuel shutoff	Connect to diagnostic sockeet (X11)	Lambda control fluctuates. Increase engine speed to approx. 3500/min, then close throttle valve	On/off ratio jumps briefly to 95%	Check accelerator control setting, Check throttle valve switch setting, Microswitch, Wiring
29.1	Microswitch	N3 10 — 19	Idle position Depress accelerator	< 1 Ω ∞	Microswitch, Wiring
29.2	Test current at electro-hydraulic actuator (Y1)	Y1 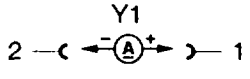 2 — 1	Connect test cable 102 589 04 63 00 to electro-hydraulic actuator. Increase engine speed to approx. 3500/min, then close throttle valve	approx. –60 mA until combustion resumed	See test steps 1.0 to 4.0, otherwise replace KE control unit

Test step	Test scope	Test connection	Operation/ Requirement	Specification	Possible cause/Remedy
30.0	Fault circuit kickdown cutoff	N3 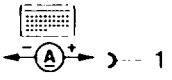 7 — 1	Ignition: **OFF** Engine systems control unit (N16) disconnected. Second mode kickdown switch (S16/7) operated	450 ± 50 mA [1]) 850 ± 50 mA [1])	Open circuit in wiring, S16/6 or S16/7, Kickdown valve automatic transmission (Y3)

[1]) Test data of switchover valve depending on manufacturer.

n. EZL ignition control unit (N1/2)

On vehicles with automatic transmission, the cable from EZL ignition control unit (N1/2) connector B, contact 4, is connected to ground (N3) in order to recognize activation of the respective ignition map. On vehicles with manual transmission the cable ends in the wiring harness.

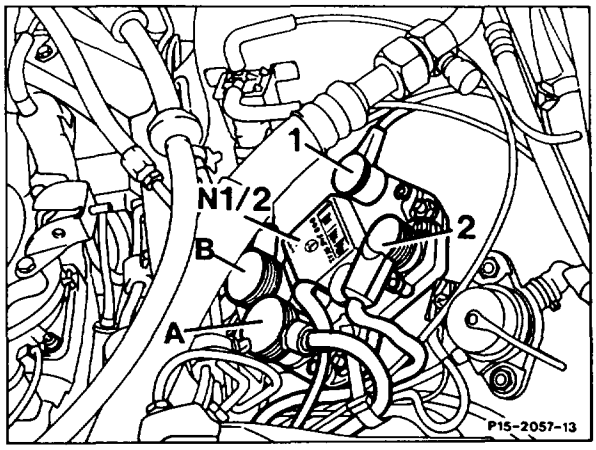

1 Coaxial connector for control cable of position sensor
2 Vacuum connection
A Supply connector, 4-pin
- 15 = Terminal 15
- 16 = Ignition coil terminal 1
- TD = TD signal
- 31 = Ground

B Senser connector, 4-pin
- 1 Coolant temperature sensor
- 2 Throttle valve switch
- 3 EZL resistance trimming plug
- 4 Vacant, cable ends in harness

o. **Table of voltage values of EZL/KE coolant temperature sensor (B11/2) and KE intake air temperature sensor (B17/2)**

up to model year 1989

Temperature °C	Resistance kΩ	Voltage at contact 21 coolant (V)	Voltage at contact 11 intake air (V)
–20	15.7	3.2–3.9	2.8–3.5
–10	10.0	2.8–3.5	2.5–3.1
0	5.9	2.4–2.9	2.1–2.6
10	3.7	1.9–2.4	1.7–2.1
20	2.5	1.5–1.8	1.3–1.6
30	1.7	1.2–1.4	1.0–1.2
40	1.17	0.9–1.1	0.8–0.9
50	0.830	0.7–0.8	0.6–0.7
60	0.600	0.5–0.6	0.4–0.5
70	0.435	0.4–0.5	0.3–0.4
80	0.325	0.3–0.4	0.2–0.3
90	0.245	0.2–0.3	0.1–0.2
100	0.185	0.8–0.9	0.1–0.2

as of model year 1990

Temperature °C	Resistance kΩ	Voltage at contact 16 coolant (V)	Voltage at contact 14 intake air (V)
– 20	15.7	5.1–5.6	2.8–3.5
– 10	10.0	4.5–5.1	2.5–3.1
0	5.9	4.1–4.5	2.1–2.6
10	3.7	3.8–4.1	1.7–2.1
20	2.5	3.4–3.8	1.3–1.6
30	1.7	2.9– 3.3	1.0–1.2
40	1.17	2.5–2.9	0.5–1.0
50	0.830	2.1–2.5	0.6–0.7
60	0.600	1.7–2.1	0.4–0.5
70	0.435	1.4–1.7	0.3–0.4
80	0.325	1.1–1.3	0.2–0.3
90	0.245	0.9–1.1	0.1–0.2
100	0.185	0.7–0.9	0.1–0.2

Diagram of temperature sensors
Resistances of EZL/KE coolant temperature sensor (B11/2) KE intake air temperature sensor (B17/2).

Note
As of 08/88 specification at 80°C: 290–350 Ω.

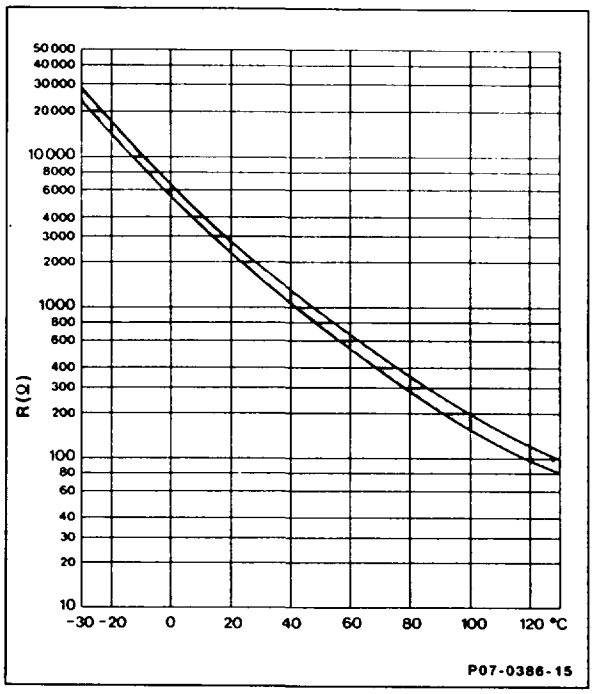

p. Table of altitude sensor (B18) and KE reference resistor (R17/1)

Table of altitude sensor (B18)

Height above MSL/m	Air pressure P absolute in mbar	Voltage approx. V
0	1013	4 ± 1
1000	899	3 ± 1
2000	795	2 ± 1

Table of KE reference resistor (R17/1) as of 09/87
Engine 103.94/981/983/985 (AUS) (J)

KE reference resistor Part no.	Resistance Ω (± 10 %)	Remarks
000 540 21 81	0	– none (original state)
000 540 22 81	220	– as resistances rise,
000 540 23 81	470	increasingly enrich mixture
000 540 24 81	750	
000 540 25 81	1300	
000 540 26 81	2400	
–	∞	

q. Test setup of 4-pin coolant temperature sensor (B11/2)

4-pin coolant temperature sensor (B11/2)

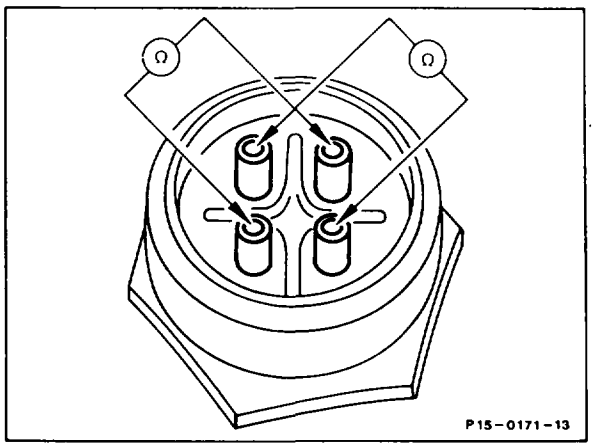

Coupling of 4-pin coolant temperature sensor (B11/2)

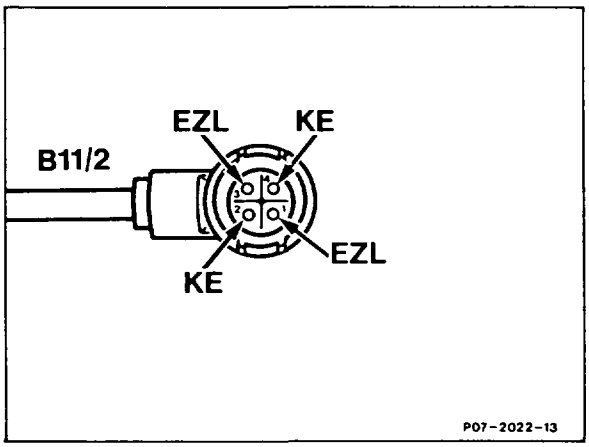

r. Locations of plug connections

Model 124

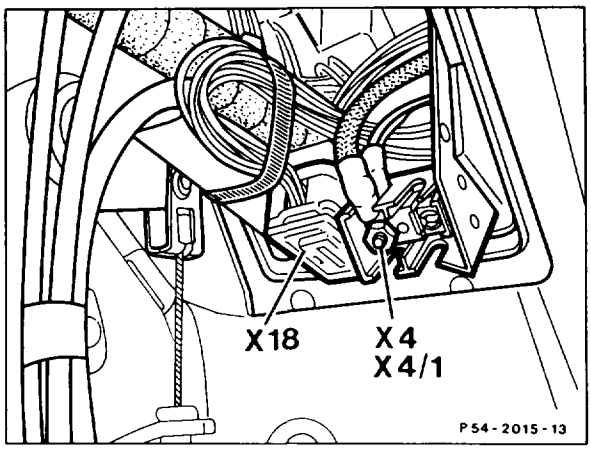

X4 Terminal block terminal 30, fuse and relay box, 2-pin
X4/1 Terminal block terminal 30, interior, 2-pin

X11 Diagnostic socket/terminal block, terminal TD

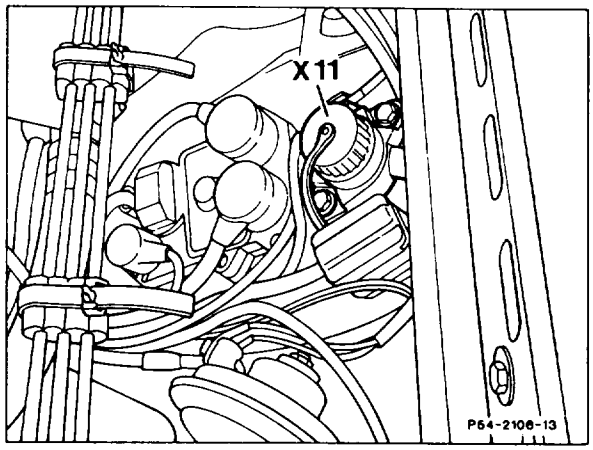

X26 Plug connection, interior/engine (in fuse box)

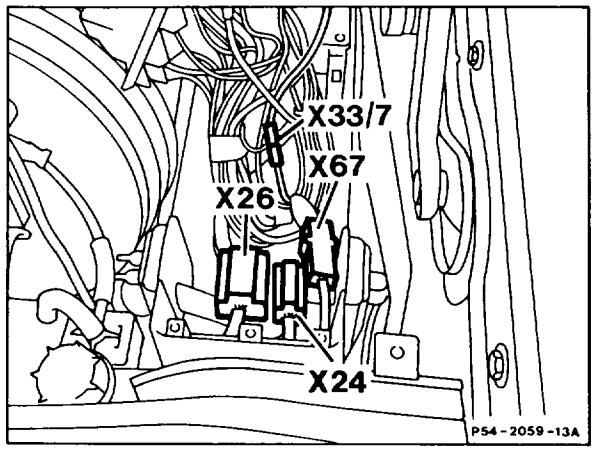

X4/10 Terminal block terminal 30/terminal 61
(X35) (Battery)

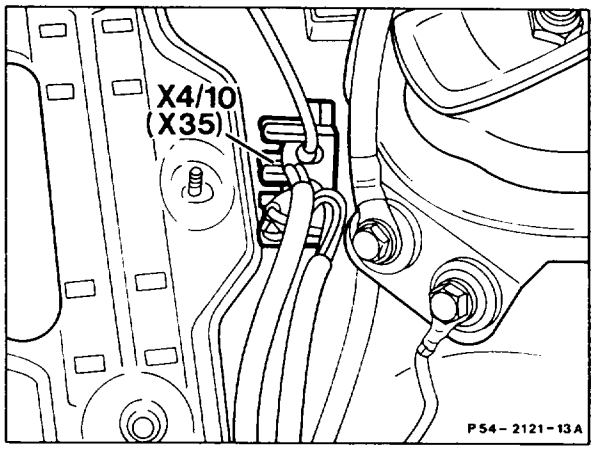

X53/5 Multi-pin plug connection/Hall-effect sensor

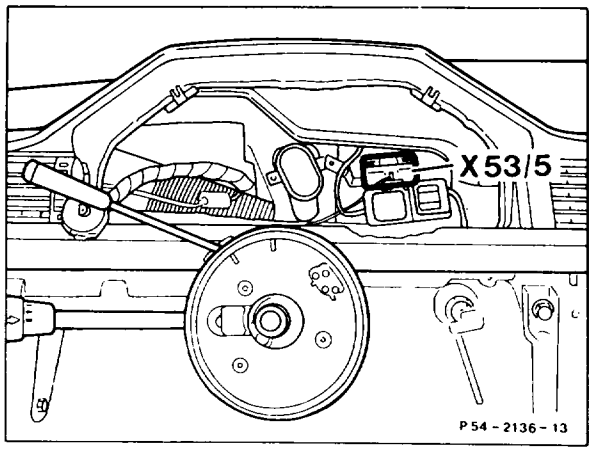

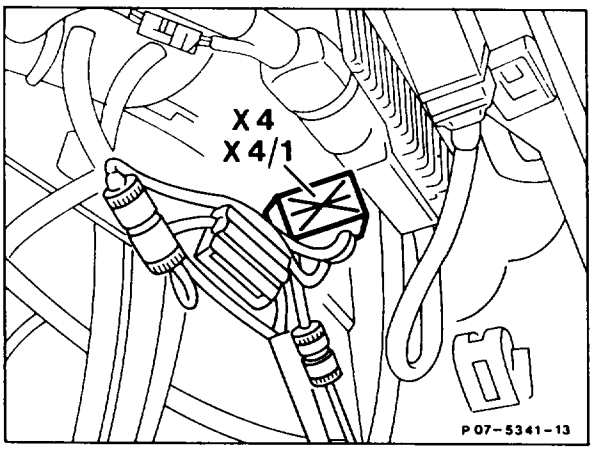

X4 Terminal block terminal 30, fuse and relay box, 2-pin
X4/1 Terminal block terminal 30, interior, 2-pin

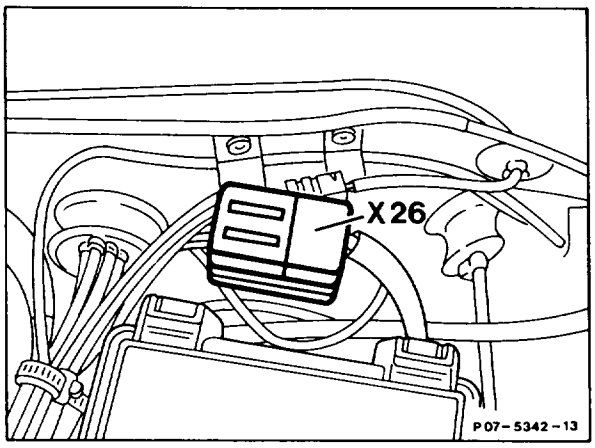

X26 Plug connection, interior/engine (in fuse box)

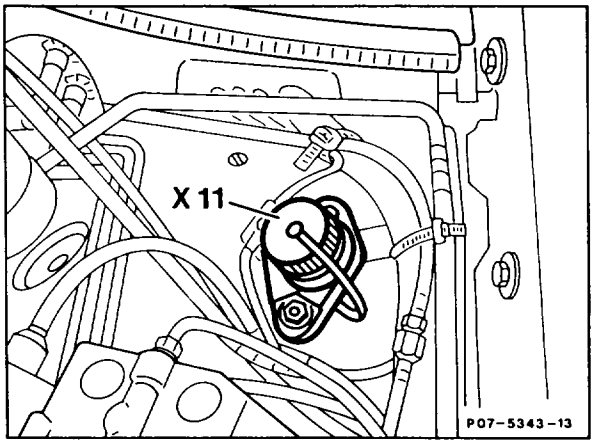

X11 Diagnostic socket/terminal block, terminal TD

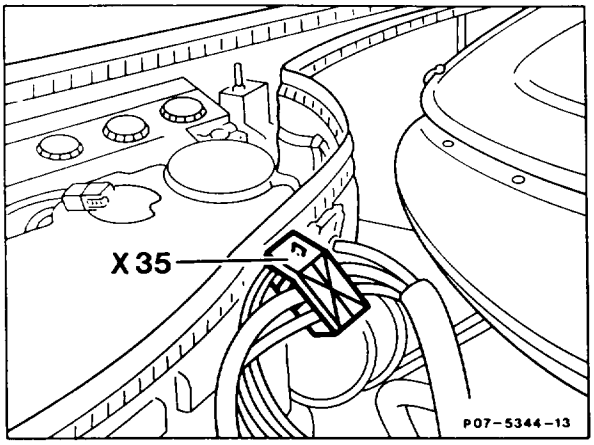

X35 Terminal block terminal 30/terminal 61 (X4/10) (Battery)

Model 201

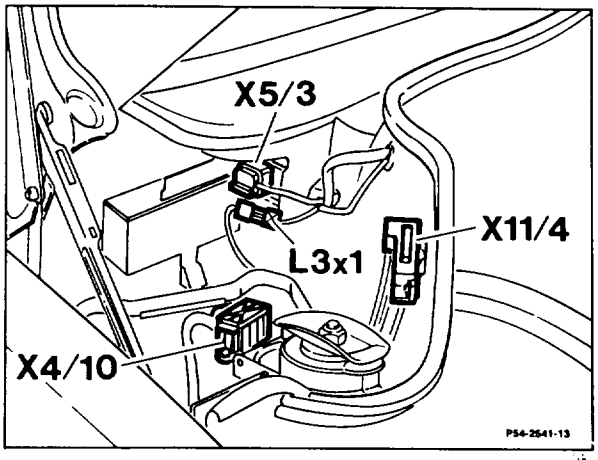

X4/10 Terminal block terminal 30/terminal 61 (Battery)

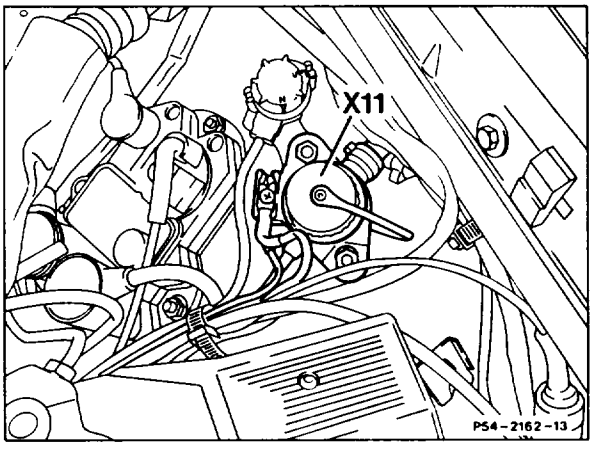

X11 Diagnostic socket/terminal block, terminal TD

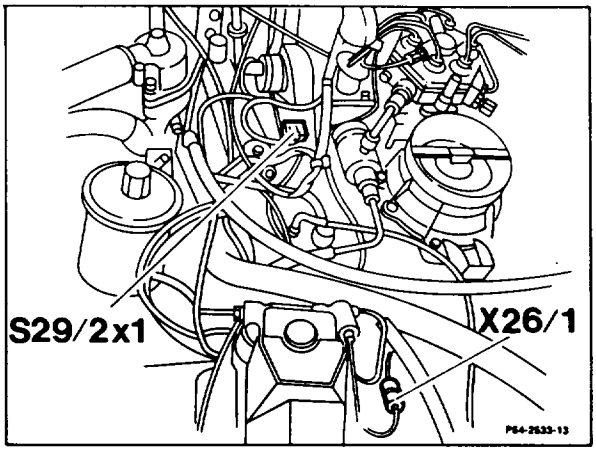

X26/1 Plug connection engine wiring harness/ headlight harness, diagnosis, 1-pin

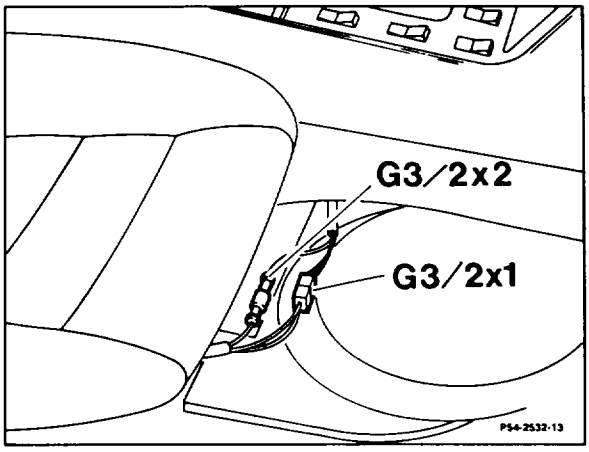

G3/2x1 Plug connection, oxygen sensor heating coil

G3/2x2 Plug connection, oxygen sensor signal

s. Location of ground points

Model 124

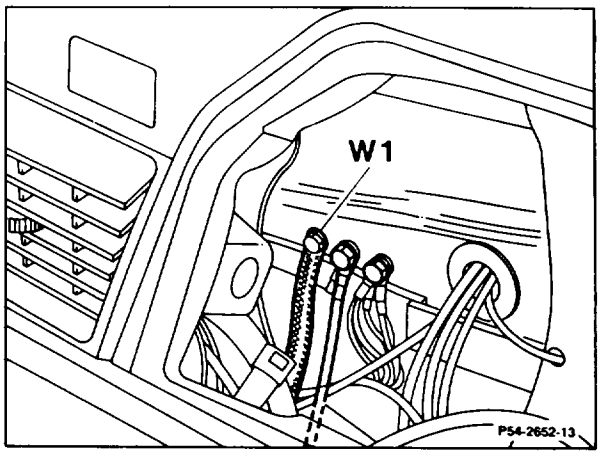

W1 Main ground (right footwell)

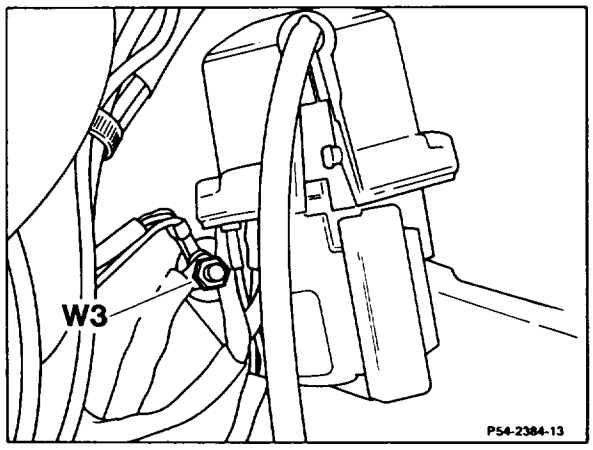

W3 Ground, front left wheelhouse (ignition coil)

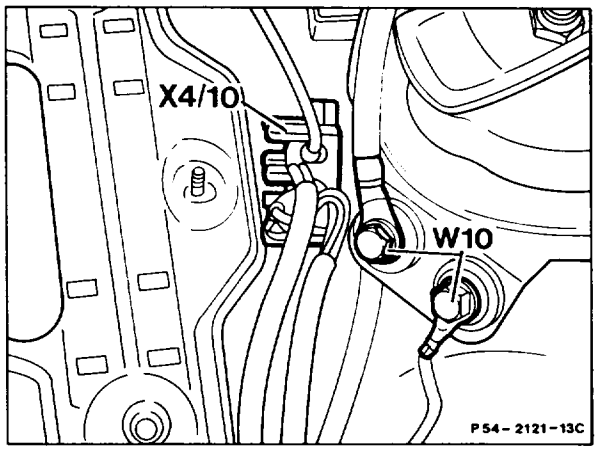

W10 Ground, battery

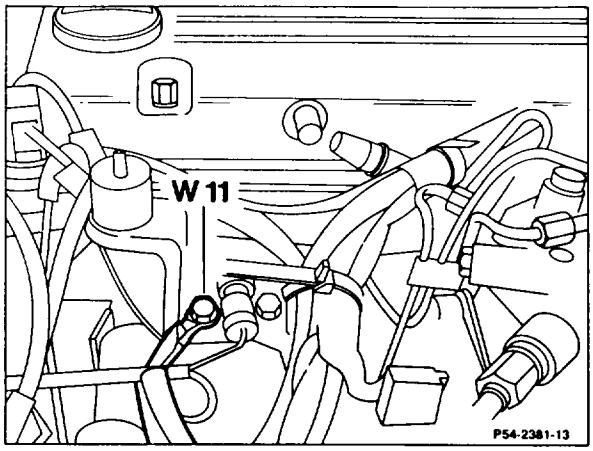

W11 Ground, engine (electric cable bolted on)

Model 126

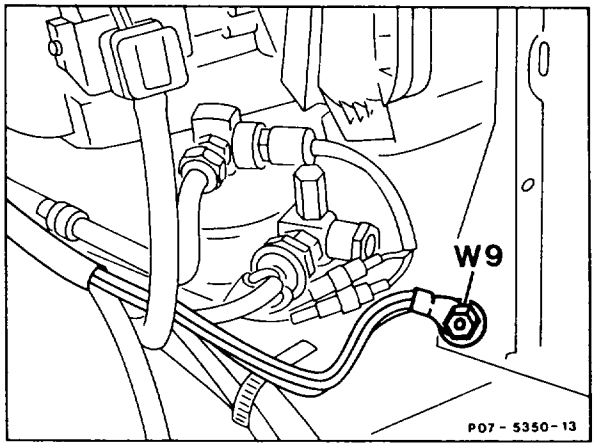

W9 Ground, front left (at headlight unit)

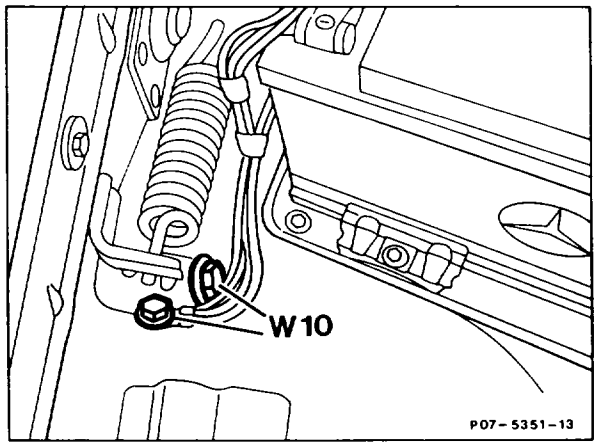

W10 Ground, battery

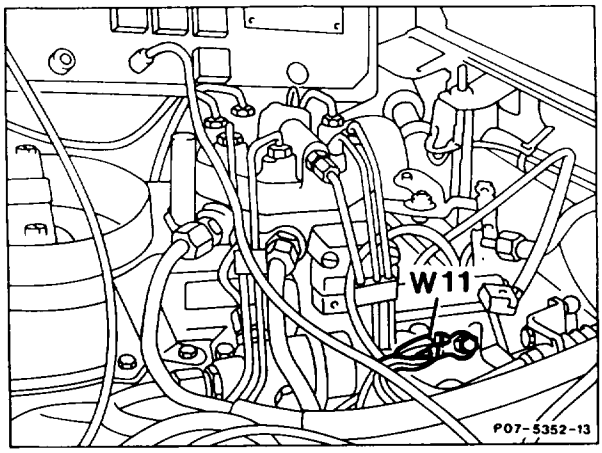

W11 Ground, engine (electric cables bolted on)

Model 201

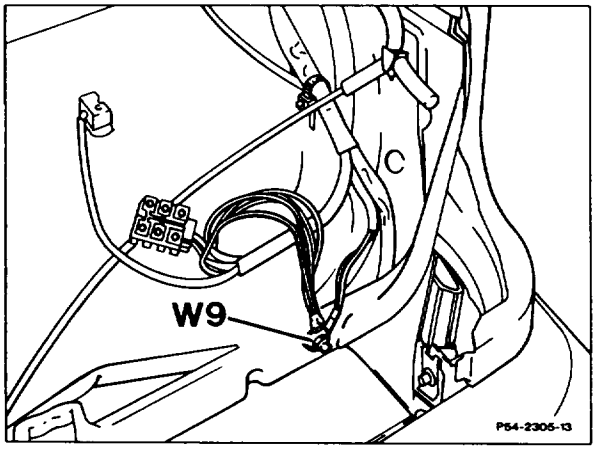

W9 Ground, front left (at headlight unit)

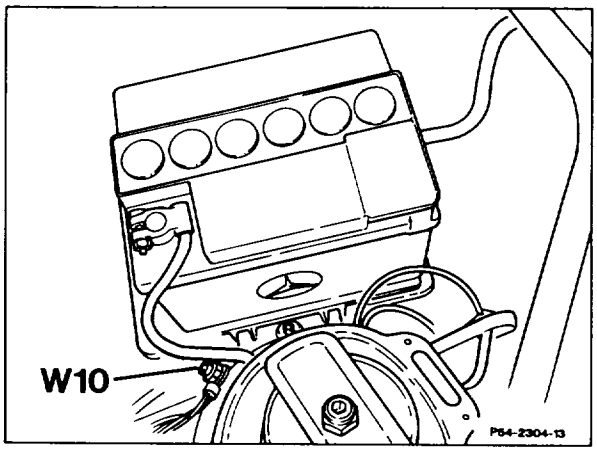

W10 Ground, battery

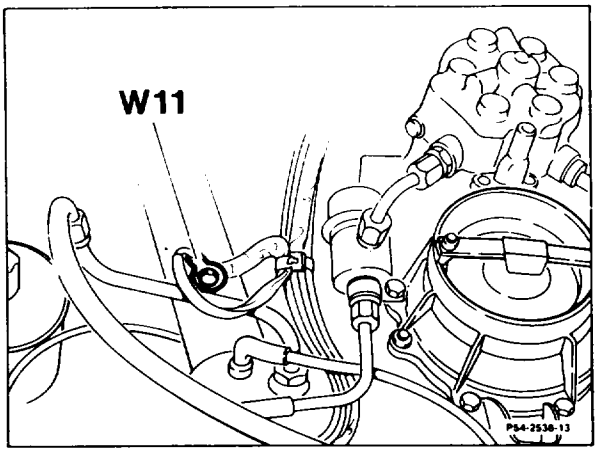

W11 Ground, engine (elecric cables bolted on)

t. Location of Hall-effect road speed sensor (B6)

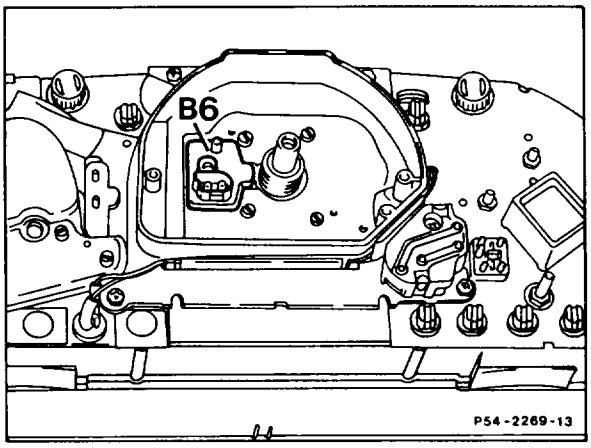

B6 Hall-effect road speed sensor

The wiring diagrams are assigned to the relevant wiring diagram volume depending on the model.

Models 107, 126

Volume 2 Wiring diagrams
Vehicle and single wiring diagrams

Model 124 up to 08/89

Volume 3 Wiring diagrams
Vehicle wiring diagrams

Volume 3.1 Wiring diagrams
Single wiring diagrams

Model 124 as of 08/89

Volume 4 Wiring diagrams
Vehicle wiring diagrams

Volume 4.1 Wiring diagrams
Single wiring diagrams

Model 129

Volume 1 Wiring diagrams

Model 201

Volume 5 Wiring diagrams
Vehicle wiring diagrams

Volume 5.1 Wiring diagrams
Single wiring diagrams

A. Removing and disassembling fuel pump set

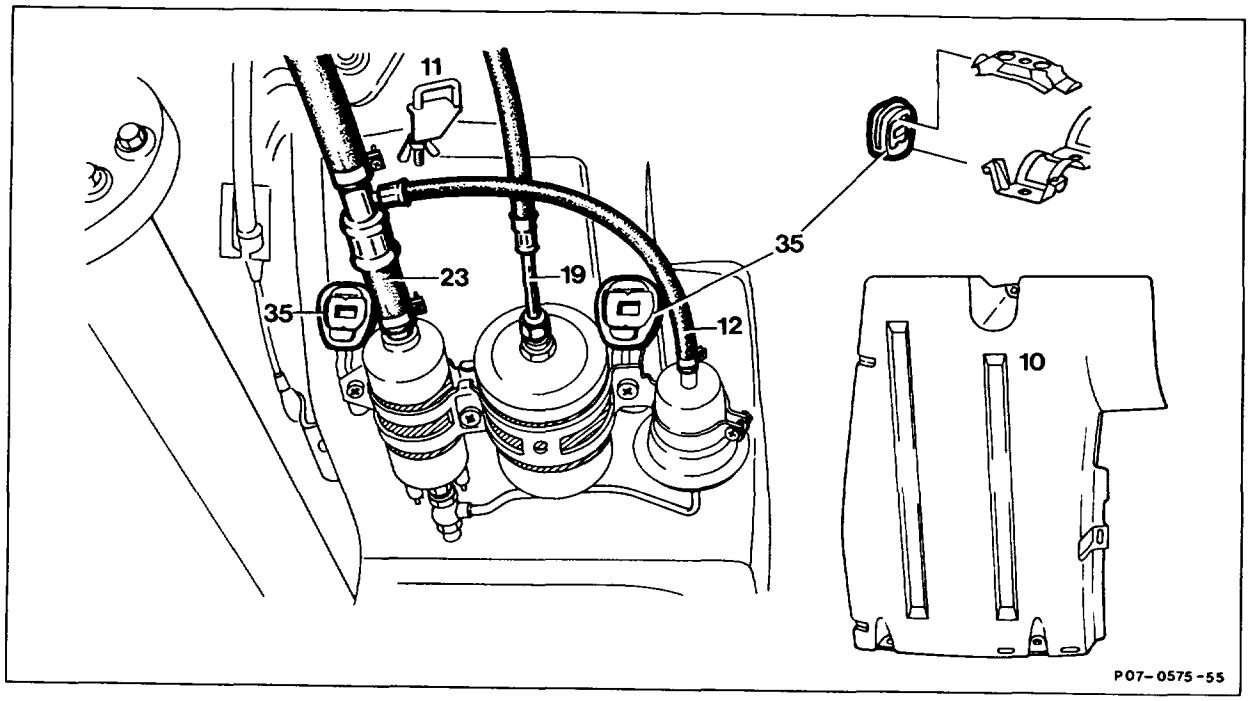

Vacuum in fuel tank	release by opening cap.
Ground cable at battery	disconnect.
Protective box (10)	unscrew.
Electric wiring at fuel pump	disconnect.
Fuel suction hose and fuel pressure hose (19, 23)	pinch off with clamp (11). Special tool 000 589 40 37 00.
Fuel suction hose, pressure hose and leak hose (19, 23, 12)	unscrew.
Rubber rings (35)	remove.
Fuel pump set	disassemble.

Special tool

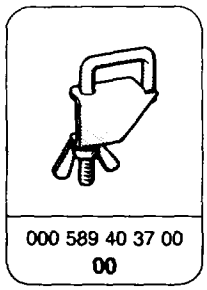

000 589 40 37 00
00

B. Assembling fuel pump set

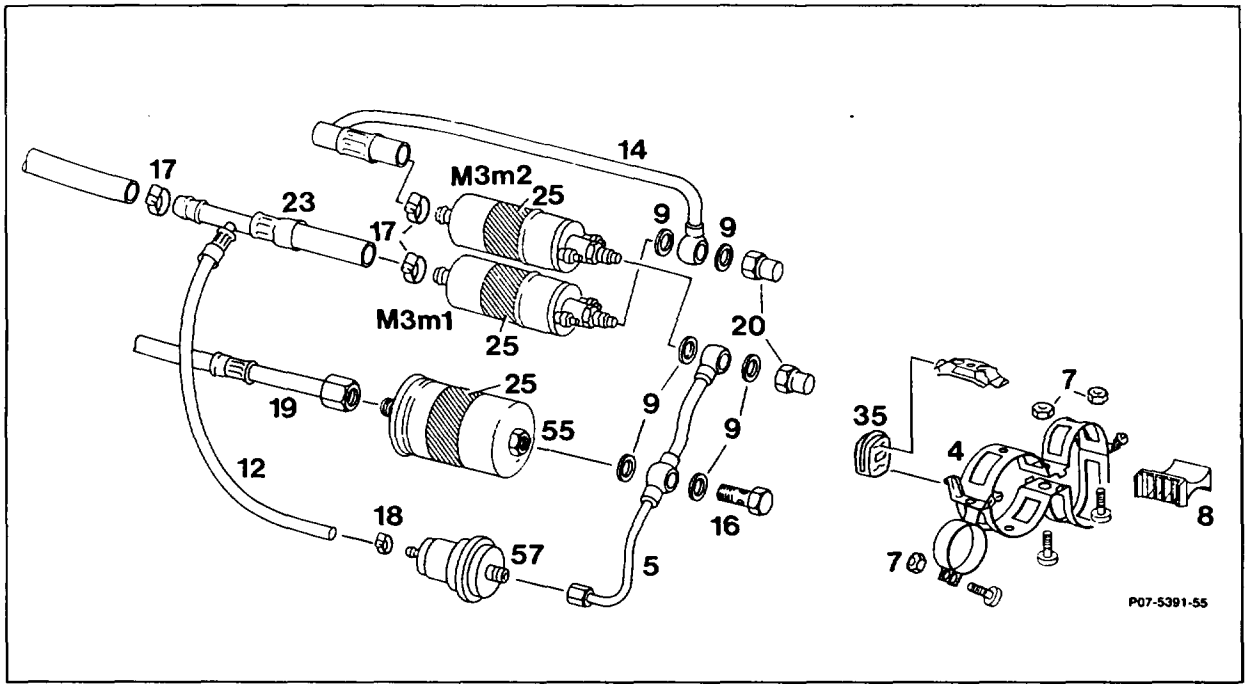

4	Holder	18	Hose clip
5	Fuel line	19	Fuel pressure hose
7	Nut	23	Fuel suction hose
8	Spacer sleeve	25	Plastic sleeve
9	Seal	35	Rubber ring
12	Leak hose	55	Fuel filter
14	Fuel line	57	Fuel accumulator
16	Banjo bolt	M3m1	Fuel pump 1
17	Hose clip	M3m2	Fuel pump 2

Fuel pump set ..... assemble.

Note

When assembling the fuel pump set, it is essential to ensure that the plastic sleeve (25) is fitted between fuel pumps and holder (4). It must project on both sides of the holder as direct contact between the fuel pump and the holder can produce contact corrosion.

C. Installing fuel pump set

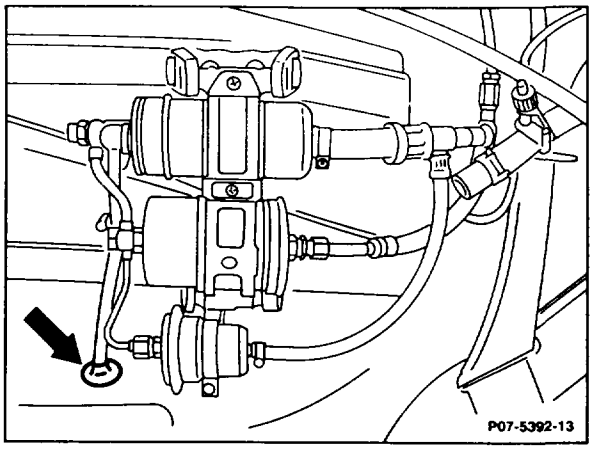

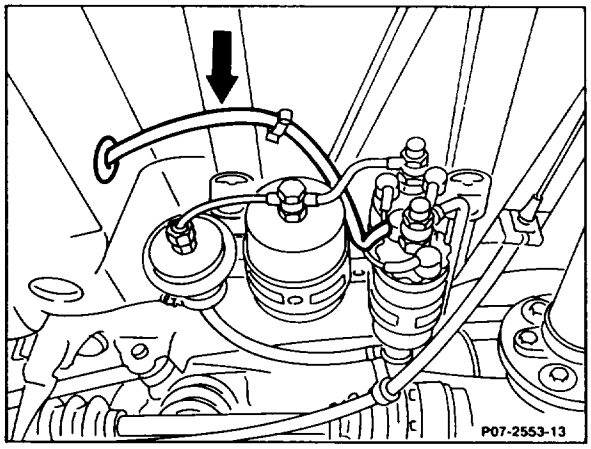

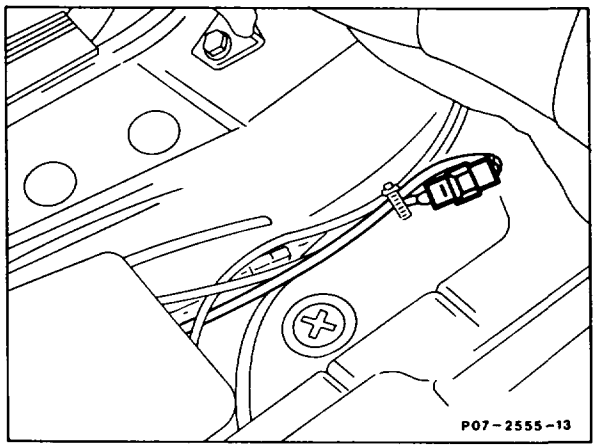

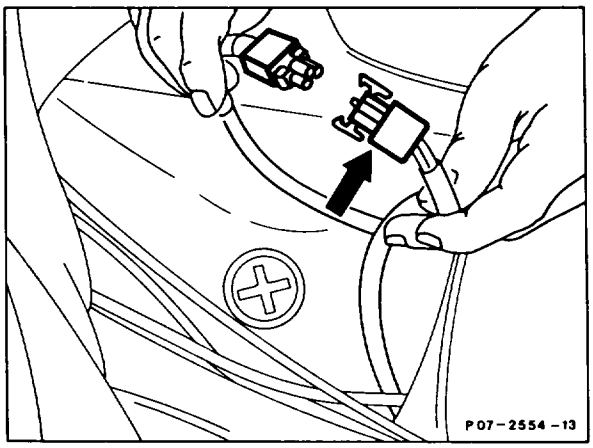

Previous wiring harness	push into vehicle interior.
New rubber rings	install.
Fuel pump set	install.
Fuel hoses	lay and connect free of kinks.
New wiring harness 124 540 78 10	connect to fuel pumps.
Wiring harness	lay in interior and install rubber grommet.
Rear seat squab	remove, install.
Cable shoes and rubber caps	cut off on standard wiring harness.

Both cables	insulate.
Bushes	solder on.
and coupling 008 545 08 28	install.

Note

Pay attention to polarity!

Wiring harness	plug together and fix with cable strap.
Ground cable at battery	connect.
Leaktightness of all connection points	check with engine running.
New protective box	install.

Note

Model 124.026/030

Since September 1986 a second fuel pump has been installed in these vehicles with an indefinite production breakpoint.

If engine running problems occur on vehicles manufactured prior to this date which are due to the formation of vapour bubbles during extreme outside temperatures, a second fuel pump can be installed.

When dealing with the complaint "fuel pump loud" (see microfilm Fault finding, Group 07.3), installation of a second fuel pump does not offer any remedy.

Production breakpoint

Model	Vehicle ident end no.
124.026/030	1A 368937

Parts

Qty	Designation	Part no.
2	Fuel pump	002 091 88 01
1	Holder	124 470 20 81
1	Spacer sleeve	201 478 01 53
1	Fuel line	124 470 28 64
1	Fuel line	201 470 24 64
1	Fuel suction hose	124 470 37 75
1	Closing nut	123 990 00 53
6	Seal	000 997 56 44
2	Hose clip 21 mm diameter	916033 021100
1	Hose clip 11 mm diameter	916033 011100
1	Wiring harness	124 540 78 10
1	Coupling	008 545 08 28
2	4 mm dia. bush	003 545 26 26
1	Cable strap	001 997 42 90
1	Protective cover	124 478 04 37
4	Rubber ring	124 478 05 82
1	Fuel filter	002 477 13 01

Operation no. of operation texts and work units or standard texts and flat rates:
07–1100.

Basic and national versions

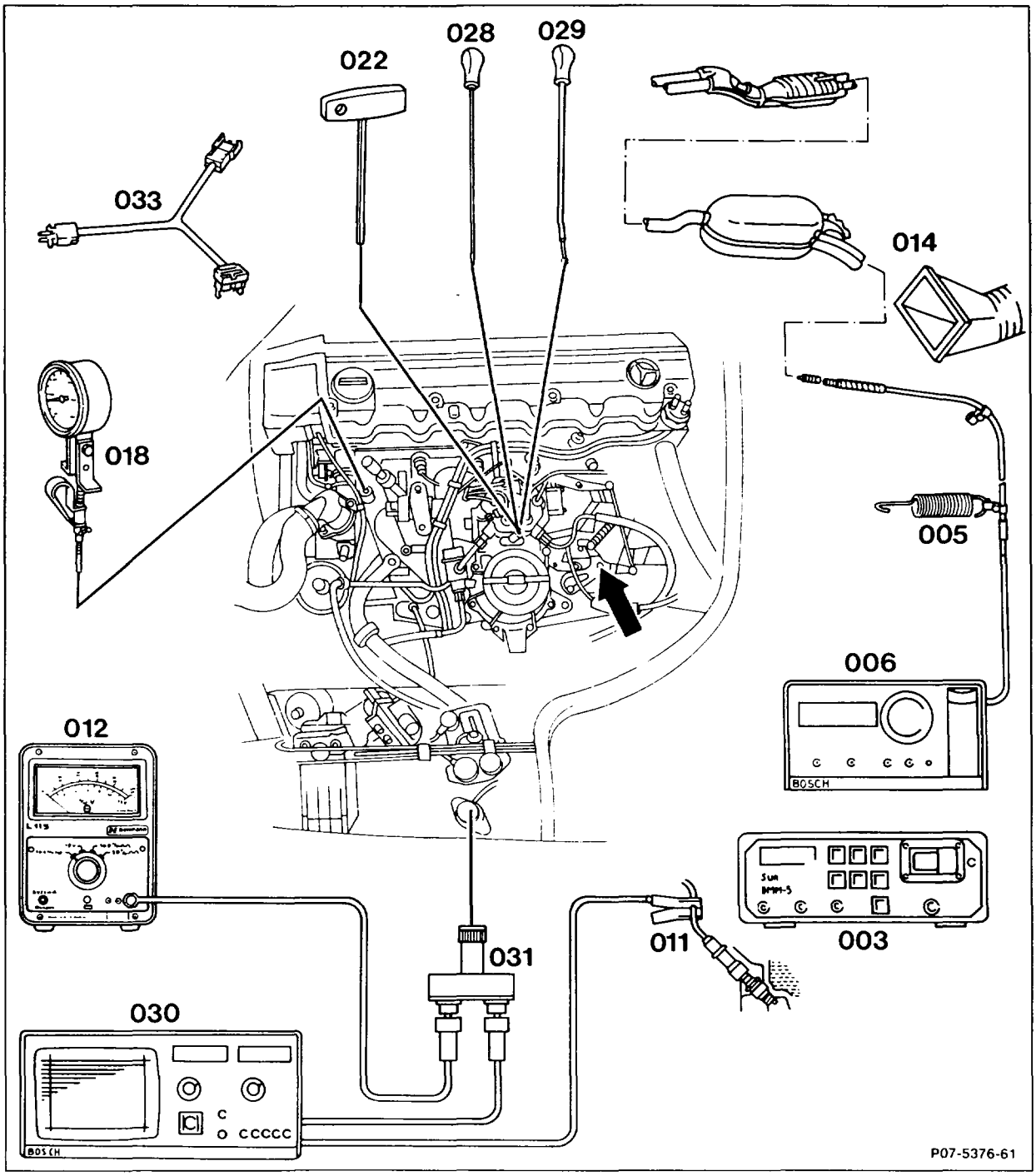

Test sheet	complete.
A/C or automatic climate control	switch off.
Selector lever	move into position "P."
Testers	connect: oil remote thermometer (018) 124 589 07 21 00, lambda control tester (012), twin socket (031), exhaust probe (005) 126 589 11 63 00, CO analyzer (006), engine tester with oscilloscope (030), trigger clamp (011), multimeter (003), test cable (033) 102 589 04 63 00.
Extraction device (014)	position at exhaust tailpipe.
Coolant level	check, adjust to correct level.
Engine oil level	check, pay attention to condition of oil (visual check).
Air cleaner	remove, install.
Accelerator control linkage (arrow) and throttle valve	check ease of movement and condition. Grease bearing points, relay levers, ball sockets.
Idle stop	check.
Fulcrum lever	check, adjust.
Full throttle stop	check from accelerator pedal, adjust.
Voltages	test at battery and ignition coil terminal and 15.
Current at actuator	test with ignition switched on.
Ignition timing	test, adjust (see table).
Vacuum advance	test, adjust (see table).
Oil level in automatic transmission	check, adjust to correct level.
Engine oil level	approx. 80°C.
Oscilloscope image	analyze.
Intake system	check for leaks by spraying.

Functional check of electrical components	perform.
Exhaust gas recirculation valve	test.
Idle speed	check (see table).
Idle emissions level or lambda control	test, adjust (see table). For adjusting use special tools screwdriver (022) 000 589 14 11 00, puller (028) 123 589 05 33 00, insertion drift (029) 123 589 00 15 00.
Smooth engine running	check. Switch on all ancillaries for this step.

Test and adjustment data

Basic version

Engine	Version	Idle speed		Idle emissions level	Lambda control
		1/min	Control range	% CO	Control range %
103.940 103.941 103.942 103.943	RÜF NV (RÜF)	650–750	35–45% 21–27° ∡	1 ± 0.5	–
	KAT			≤ 0.5 [2])	[1])
103.980	Std.	600–700		1 ± 0.5	–
	Std. KAT			1 ± 0.5 < 1.5 [2])	
103.981	RÜF NV (RÜF)			1 ± 0.5	
	KAT			≤ 0.5 [2])	[1])
103.982 103.983 103.985	RÜF NV (RÜF)	up to 5/90: 600–700 as of 6/90: 650–750		1 ± 0.5	–
	KAT			≤ 0.5 [2])	[1])
103.984	RÜF	650–750		1 ± 0.5	–
	KAT			≤ 0.5 [2])	[1])

[1]) Test lambda control at 2500/min and read off mean value. Detach regeneration line at regeneration valve for this step and seal. Compare this reading with idle emissions reading. The mean value at idle speed must not differ by more than ± 10 from the reading obtained at 2500/min.

[2]) For special emissions test (ASU).

National version (AUS) **1986–1991** silver information plate

Engine	Version	Idle speed		Idle emissions level	Lambda control
		1/min	Control range	% CO	Control range %
103.94	(AUS)	700 ± 50	35–45% 21–27° ∡	–	[1]
103.98		650 ± 50			

[1] Test lambda control at 2500/min and read off mean value. Detach regeneration line at regeneration valve for this step and seal. Compare this reading with idle emissions reading. The mean value at idle speed must not differ by more than ± 10 from the reading obtained at 2500/min.

National version
(CH) **up to 1986** green information plate
(CH) **1986, 1987** green information plate
(CH) **KAT 1986, 1987** light green information plate
(CH) **KAT as of 1988** information plate not fitted, engine data setting plate instead
(S) **1986, 1987** blue information plate
(S) **KAT as of 1986** light blue information plate

Engine	Version	Idle speed		Idle emissions level	Lambda control
		1/min	Control range	% CO	Control range %
103.94	(CH) KAT (S) KAT	700 ± 50	35–45% 21–27° ∡	≤ 0.5	[1]
103.98 außer 103.984	(CH) (S)	780 ± 50		0.6 ± 0.3	–
	(CH) KAT (S) KAT	650 ± 50; as of 06/90 750 ± 50		≤ 0.5	[1]
103.984	(CH) KAT (S) KAT	700 ± 50			

[1] Test lambda control at 2500/min and read off mean value. Detach regeneration line at regeneration valve for this step and seal. Compare this reading with idle emissions reading. The mean value at idle speed must not differ by more than ± 10 from the reading obtained at 2500/min.

National version (J) **1986–1990** information plate in Japanese

Engine	Version	Idle speed		Idle emissions level	Lambda control
		1/min	Control range	% CO	Control range %
103.94	(J)	700 ± 50	35–45%	–	[1]
103.98		650 ± 50			

[1] Test lambda control at 2500/min and read off mean value. Detach regeneration line at regeneration valve for this step and seal. Compare this reading with idle emissions reading. The mean value at idle speed must not differ by more than ± 10 from the reading obtained at 2500/min.

National version (USA) **1986–1989** black information plate
(USA) **1990** black information plate Federal, yellow California

Engine	Version	Idle speed		Idle emissions level	Lambda control
		1/min	Control range	% CO	Control range %
103.94	(USA)	700 ± 50	35–45%	–	[1])
103.98		650 ± 50; as of model year 1990 700 ± 50			

[1]) Test lambda control at 2500/min and read off mean value. Detach regeneration line at regeneration valve for this step and seal. Compare this reading with idle emissions reading. The mean value at idle speed must not differ by more than ± 10 from the reading obtained at 2500/min.

Current at actuator

Engine	Version	Current with ignition switched on (mA)
103.94	KAT	20
103.98		
103.94	RÜF, without KAT	10
103.98 [1])		

1) Engine 103.980 Std.: 0 mA.

EZL ignition timing point

Engine	EZL ignition control unit	Engine speed 1/min	Ignition timing point in ° CA before TDC		
			Resistance trimming plug position or type of fuel	without vacuum	with vacuum
Basic version KAT/RÜF and (CH) (S) KAT					
103.940 103.941 103.942 103.943	003 545 95 32 003 545 96 32 005 545 84 32 005 545 86 32 006 545 73 32 006 545 75 32 008 545 61 32 008 545 63 32 011 545 88 32 011 545 89 32	3200	S	25–29	40–44
			N	19–23	
		Idle speed	S and N	7–11	7–11
103.980	003 545 14 32 003 545 15 32	3200	1/ premium leaded	23–27	39–43
		Idle speed		8–13	8–13
		3200	3/ premium unleaded	19–23	39–43
		Idle speed		8–13	8–13
103.981 103.983 103.985	004 545 44 32 004 545 46 32 005 545 85 32 005 545 87 32 006 545 74 32 006 545 76 32 007 545 86 32 007 545 87 32 008 545 62 32 008 545 64 32	3200	S	27–31	40–44
			N	21–25	40–44
		Idle speed	S and N	6–11	6–11
103.982	004 545 44 32 004 545 46 32 005 545 85 32 005 545 87 32 006 545 74 32 006 545 76 32				
103.984	007 545 86 32 007 545 87 32				
National version (CH) 1986, (S) 1986 [1])					
103.981 103.983	004 545 69 32 005 545 49 32 005 545 88 32	3200	S	29–33	40–44
			N	23–27	
		Idle speed	S and N	OT ±2	OT ±2

[1]) For (CH) KAT, (S) KAT, same values as basic version KAT.

EZL ignition timing point

Engine	EZL ignition control unit	Engine speed 1/min	Ignition timing point in ° CA before TDC		
			Resistance trimming plug position or type of fuel	without vacuum	with vacuum
National version (AUS)					
103.940 103.942	005 545 84 32 005 545 86 32 006 545 73 32 006 545 75 32 008 545 61 32 008 545 63 32	3200	Reference resistor 220 Ω	19–23	40–44
		National version		7–11	7–11
103.981 103.983	004 545 44 32 004 545 46 32 005 545 85 32 005 545 87 32 006 545 74 32 006 545 76 32 008 545 62 32 008 545 64 32	3200	Reference resistor 220 Ω	21–25	40–44
		National version		6–11	6–11
National version (J)					
103.940 103.942	005 545 84 32 005 545 86 32 006 545 73 32 006 545 75 32 008 545 61 32 008 545 63 32	3200	Reference resistor 750 Ω	25–29	40–44
		National version		7–11	7–11
103.981 103.983 103.985	004 545 44 32 004 545 46 32 005 545 85 32 005 545 87 32 006 545 74 32 006 545 76 32 008 545 62 32 008 545 64 32	3200	Reference resistor 750 Ω	27–31	40–44
		National version		6–11	6–11
National version (USA)					
103.940 103.942	005 545 84 32 005 545 86 32 006 545 73 32 006 545 75 32 008 545 61 32 008 545 63 32 008 545 95 32 009 545 79 32	3200	Reference resistor 750 Ω	25–29	40–44
		National version		7–11	7–11
103.981 103.983	004 545 44 32 004 545 46 32 005 545 85 32 005 545 87 32 006 545 74 32 006 545 76 32 008 545 96 32 009 545 80 32	3200	Reference resistor 750 Ω	27–31	40–44
		National version		6–11	6–11

Special tools

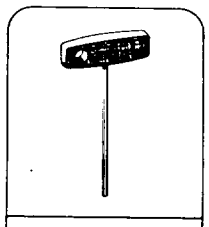

000 589 14 11 00
07

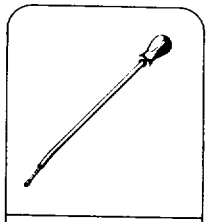

123 589 00 15 00
07

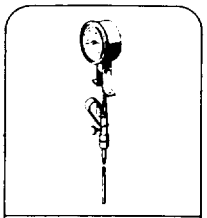

124 589 07 21 00
18

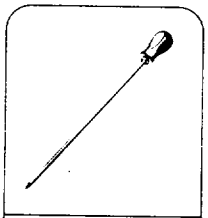

123 589 05 33 00
07

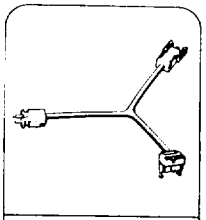

102 589 04 63 00
07

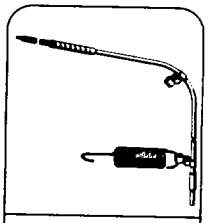

126 589 11 63 00
07

201 589 00 99 00
15 54

Commercially available testers (see Workshop Equipment Manual)

Designation	e.g. Make, order no.
CO analyzer	
Engine tester (engine speed, dwell angle, ignition angle, oscilloscope, voltmeter)	Bosch, MOT 002.02 Sun, 1019
Lambda control tester	Hermann, L 115
Multimeter	Sun, DMM-5
Twin outlet	Hermann, ECD 53

Shop-made tools

Intake pipe DIN 19534 DN 100 for air flow sensor	length approx. 500 mm
Seal	e.g. from air cleaner

Note
Test and adjust lambda control with a lambda control tester. If no lambda control tester is available, a dwell angle tester may be used. Idle speed must not be set when the engine is too hot, e.g. immediately after driving sharply or after measuring engine output on the dynamometer.

Testing, adjusting

1 Complete test sheet.

2 Switch air conditioner or automatic climate control.

3 move selector lever into position "P."

4 Connect testers:
oil remote thermometer (018) 124 589 07 21 00,
lambda control tester (012),
twin outlet (031),
exhaust probe (005) 126 589 11 63 00,
CO analyzer (006),
engine tester with oscilloscope (030),
trigger clamp (011),
multimeter (003),
test cable (033) 102 589 04 63 00.

5 Fit extraction device (014) into exhaust tailpipe.

6 Check coolant level, adjust to correct level if necessary.

7 Check engine oil level, paying attention to condition of oil (visual check).

8 Check oil level in automatic transmission.

9 Remove air cleaner (09–1051).

10 Check ease of movement and condition of accelerator control linkage and throttle valve. Lubricate all bearing points and ball sockets.

11 Check idle speed stop.

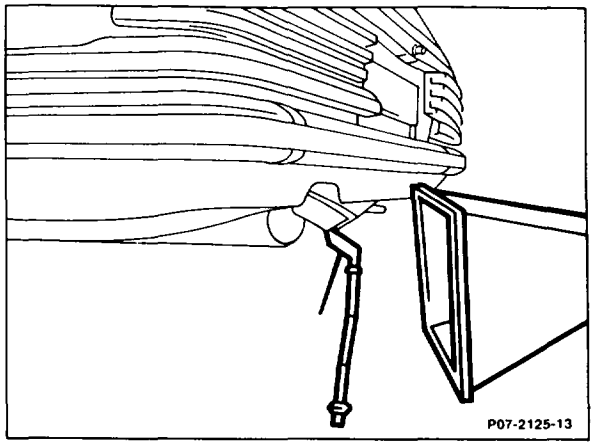

Engines without ASR

Check fulcrum lever, adjust. Check whether the roller (15) in the fulcrum lever (13) is resting free of testing against end stop. Adjust fulcrum lever (13) if necessary with the connecting rod (2) so that the roller (15) is resting free of tension against end stop.

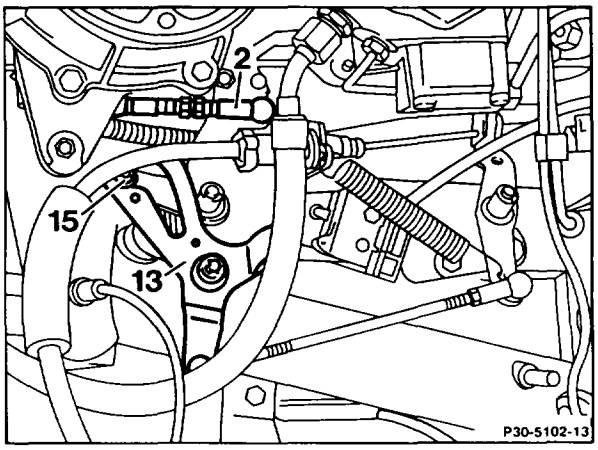

Engines with ASR
Switch on ignition.
Fulcrum lever of set point sensor (53) must be resting against idle speed stop; adjust if necessary (30–1010).

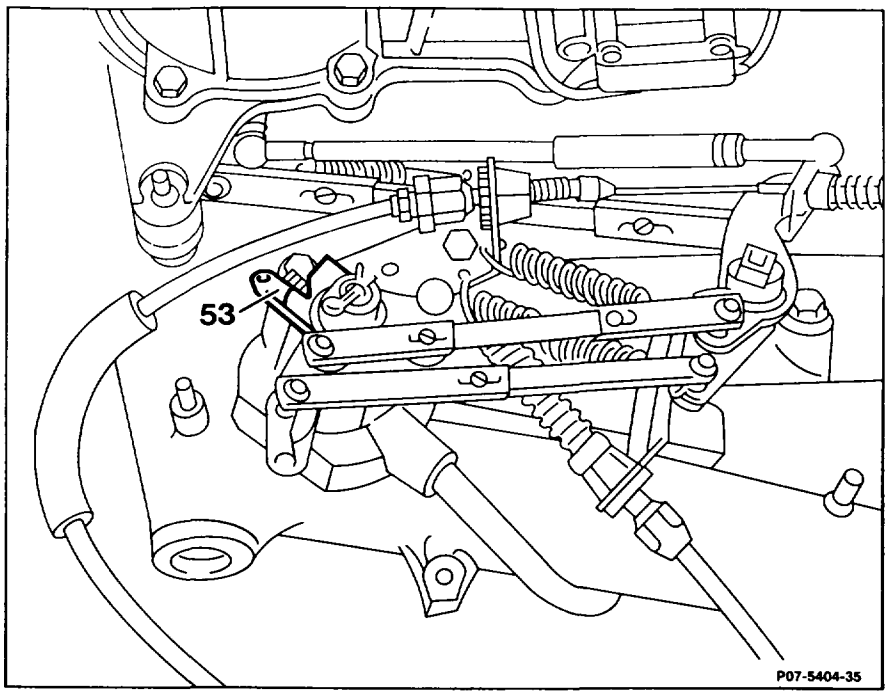

Check whether the throttle valve is resting against idle speed stop. Detach connecting rod for this step.

Vehicles with Tempomat cruise control
Check whether the actuator is resting against idle speed stop of the Tempomat cruise control. To do this, push lever of actuator clockwise against idle speed stop of Tempomat cruise control.
When attaching the pull rod (21), ensure that the lever of the actuator is lifted about 1 mm off the idle stop at the cruise control. Adjust pull rod if necessary.

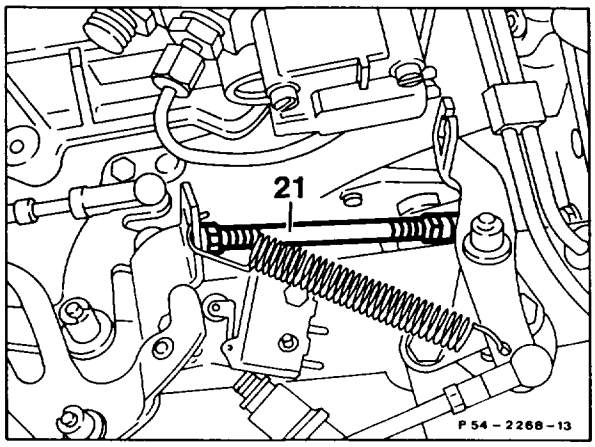

12 Check full throttle stop from accelerator pedal, adjust (30–1010).

13 Test voltages (battery and ignition coil):

a) No-load voltage
Connect voltmeter to battery and read off voltage.
Specification: 12.2 volts.

b) Ignition coil
Engine not running, switch on ignition. Test voltage terminal 15 to ground at contact 5 of diagnostic socket.
Specification: battery voltage.

Test difference in voltage between terminals 15 and 1 at contacts 5 and 4 of diagnostic socket.
Specification: 0 volts.

If the specifications are not achieved, test ignition system (15–1250).

14 Test current at actuator with ignition switched on. To do this, unplug coupling at actuator, connect test cable 102 589 04 63 00 into circuit.
Connect multimeter, set to mA.
Specification: see table.
If the specification is not achieved, test electrical components of KE injection system (07.3–0121).

15 Test ignition timing and vacuum advance.
For test data see table.

16 Warm up engine to approx. 80°C oil temperature.

17 Analyze oscilloscope image (see Diagnosis Manual Engine Volume 1 Register C).

18 Check intake system for leaks by spraying all sealing points with Iso-Oktan DIN 51756.
CO increase <2 %.

⚠
Do not use commercially available fuel for spraying (harmful vapours). Pay attention to risk of fire and do not spray onto red-hot parts or parts of the ignition system.

19 Test decel fuel shutoff. To do this, hold engine speed at constant >2500/min.
Operate microswitch by hand; engine must surge when this is done.
If necessary, check fuel pressures and internal leaktightness (07.3–1603).

20 Functional check of KAT/RÜF electrical components:

- Fault diagnosis by measuring on/off ratio.
  Engine idling
  Specification: KAT = readout fluctutates
  RÜF = constant readout 50 %
  If the specifications are not achieved, perform test program (07.3–0121).

- Function check of idle speed and full load contact.
  Engine: **OFF**.
  Ignition: **ON**.
  Specification: 70 %.

  Deflect air flow sensor plate.
  Specification: 10%.
  If 70%, test throttle valve switch (07.3–0121).

  Air flow sensor plate zero position.
  Specification: 70 %.

Open throttle valve fully.
Specification: 20 %.
If 40 %, test air flow sensor position indicator (07.3–0121).

21 Test operation of exhaust gas recirculation valve. Detach vacuum line (arrow) at exhaust gas recirculation valve (60), connect tester to exhaust gas recirculation valve and pressurize with vacuum.
If there is no clear deterioration in engine running, replace exhaust gas recirculation valve. Test actuation if necessary (14–7611).

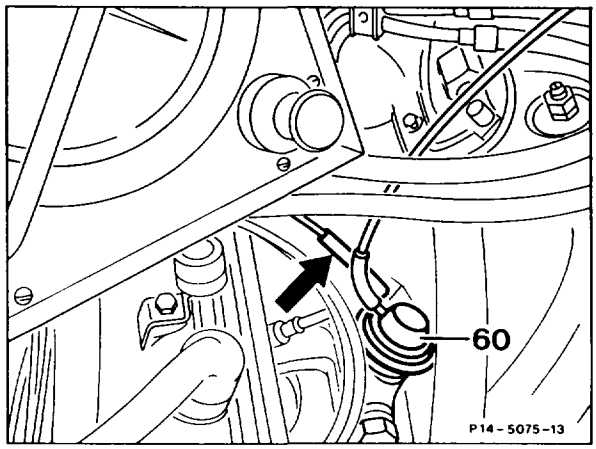

22 Install air cleaner (09–1051).

23 Test idle speed (see table).

Note
Idle speed can no longer be adjusted on engines with electronic idle speed control. If the idle speed differs, perform test program (07.3–2006).

24 Test idle emissions level (see table); adjust if necessary (see step 26).

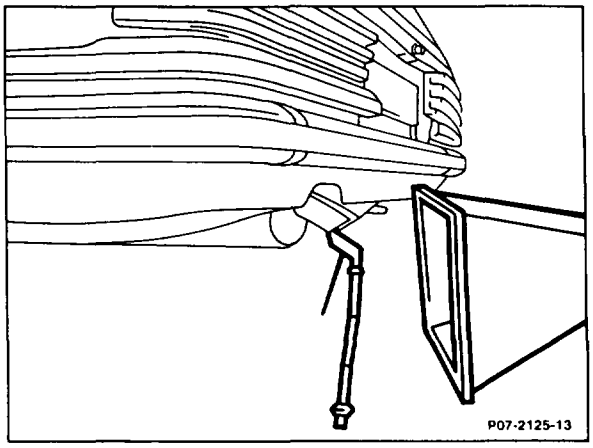

Measuring point at exhaust tailpipe

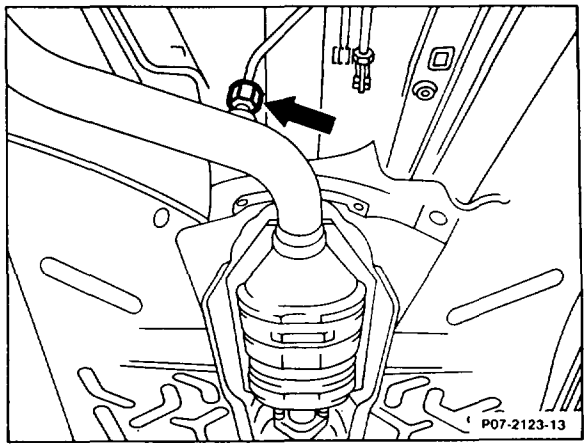

Measuring point (arrow) for open-loop KAT, upstream of catalytic converter (only for adjustment work).

25 Test lambda control (see table).

Note
The readout must fluctuate during the measurement. If a constant readout is indicated, there is a fault in the lambda control, e.g. oxygen sensor disconnected. For troubleshooting, see "Testing electrical components of KE injection system" (07.3–0121).

Detach regeneration line to throttle valve body at regeneration valve (78) and seal.

Connect lambda control tester to diagnostic socket (X11).

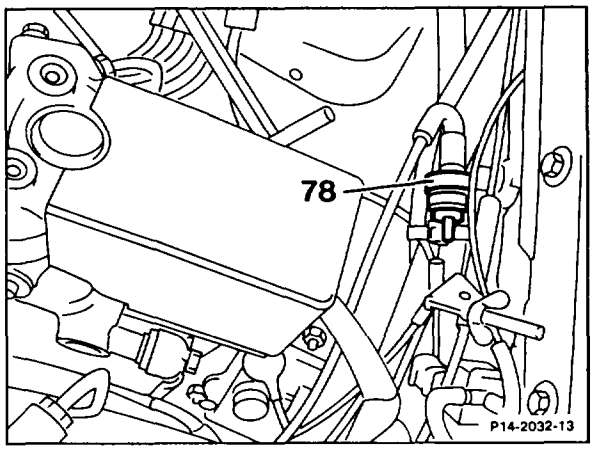

Lambda control tester	Position
Bosch	100% IR
Hermann	100%

Test on/off ratio at 2500/min and read off mean valule. Compare this reading with the idle speed value. The mean value at idle speed must not differ by more than ± 10 from the reading obtained at 2500/min.
Adjust lambda control (see step 26).

26 Adjust idle speed emissions level of lambda control.
To do this remove anti-tamper plug (44) with the puller. Insert screwdriver (arrow) through the opening on the top of the air cleaner and push down on adjusting device (42).
Push adjusting device down with screwdriver against spring force, turn slightly until the hexagon head (43) engages in the mixture regulating screw:
Turning to the left = leaner – on/off ratio rises
Turning to the right = richer – on/off ratio drops

After each adjustment, briefly operate throttle; re-adjust if necessary.
After the adjustment, insert a blue anti-tamper plug (44), part no. 000 997 59 86, with the insertion drift.
Re-connect regeneration line (only if lambda control fitted).

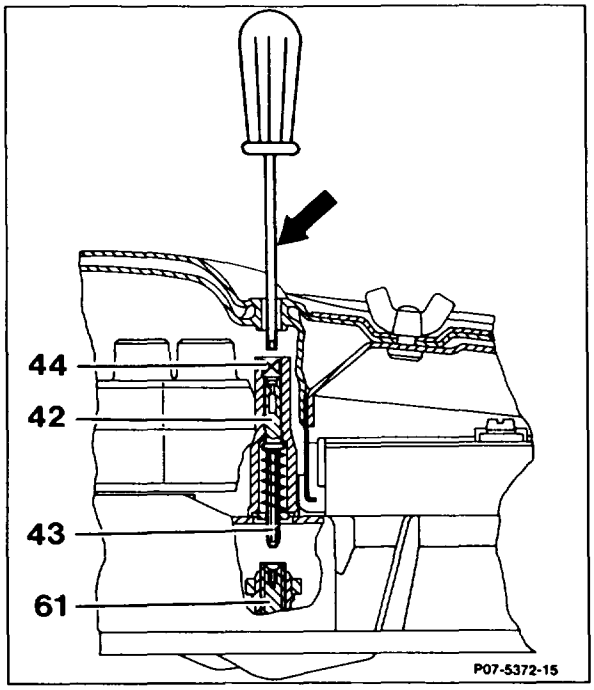

27 Check that engine runs smoothly. To do this, move selector lever into Drive mode, switch on air conditioner/automatic climate control, turn power steering to full lock; engine must continue to run smoothly.

07.3–1122 Testing kickdown switch

Operation no. of operation texts and work units or standard texts and flat rates:
07–1122.

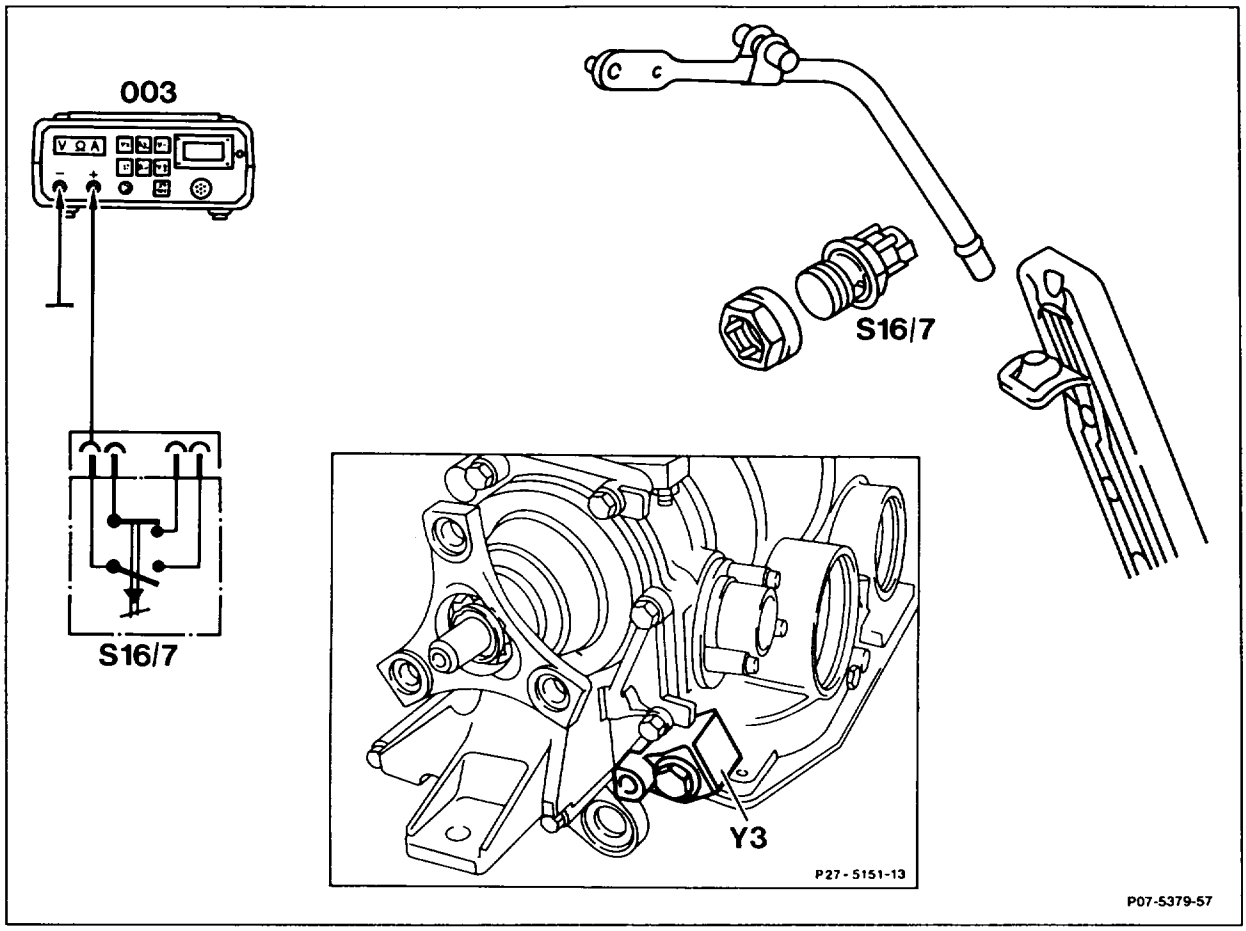

S16/7 Kickdown switch
Y3 Solenoid valve (kickdown valve, automatic transmission)

003 Multimeter

Commercially available tools and testers (see Workshop Equipment Manual)

Designation	e.g. Make, order no.
Multimeter	Sun, DMM–5

Special tool

201 589 00 99 00
15 54

Test

Symbols for testers

	Multimeter
	Socket
	Connector
	Ground

Symbols for test mode with multimeter

	Multimeter DC voltage mode
	Multimeter Resistance mode

Note

See appropriate wiring diagrams volume for wiring diagrams.

Test step	Test scope	Tester/ Test connection	Operation/ Requirement	Specification/ Function	Possible cause/Remedy
1.0	Kickdown cutoff	With selection program: 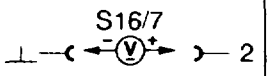 W/o selection program: (AUS), (J), (USA) 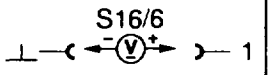 	Ignition: **ON** **Engine: start**	11–14 V 11–14 V	Open circuit in wiring
1.1		With selection program: 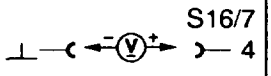 W/o selection program: (AUS), (J), (USA) 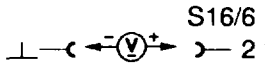 	Increase engine speed	Voltage must drop approx. 200/min before governed speed reached	Replace fuel pump relay
2.0	Kickdown switch	With selection program: 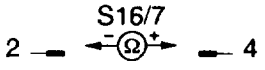 W/o selection program: (AUS), (J), (USA) 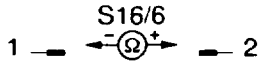 	Ignition: **OFF** Kickdown switch (S16/6 or S16/7) **operated** Kickdown switch (S16/6 or S16/7) **not operated**	< 1 Ω ∞	Replace kickdown switch

Test step	Test scope	Tester/ Test connection	Operation/ Requirement	Specification/ Function	Possible cause/Remedy
2.1	Selector mode switch (S16/5) except (AUS), (J), (USA)	S16/5 3 — Ω — 2	Ignition: **OFF** Selector mode switch: in position "**E**" in position "**S**"	 <1 Ω ∞	Selector mode switch (S16/5)
3.0	Solenoid valve (Y3)	⊥ — V — Y3	Unplug coupling from solenoid valve (Y3). Operate kick-down switch by hand.	11–14 V	Open circuit in wiring
4.0	Second mode switchover valve (Y4)	Y4 2 — V — 1	Coupling disconnected from switch-over valve (Y4). Operate kick-down switch by hand. Selector mode switch (S16/5) in position "**E**"	11–14 V	Open circuit in wiring S16/7, Fuel pump relay (up to 09/85)

Location of kickdown valve (Y3)

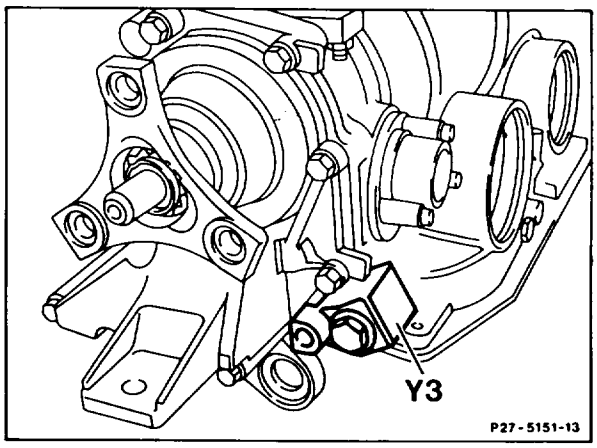

Y3 Kickdown valve, automatic transmission

07.3–1203 Testing engine output and exhaust emission on the roller dynamometer

Preceding work:
Testing, adjusting engine (07.3–1100).

Operation no. of operation texts and work units or standard texts and flat rates:
07–1203, 07–1206.

Basic and national versions, (CH) (S) KAT and without KAT

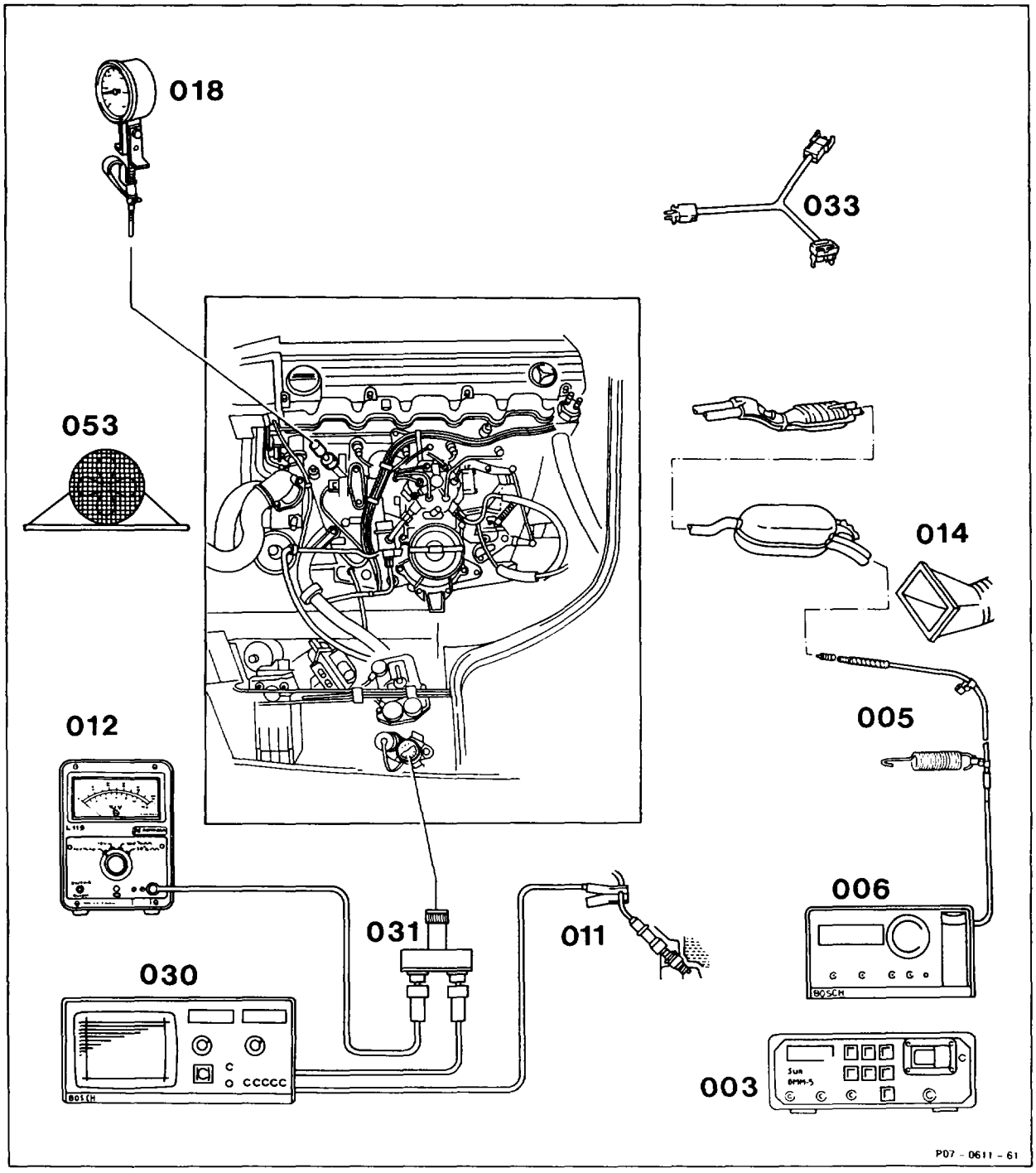

Test sheet	complete.
Fluid levels (engine oil, automatic transmission fluid, coolant)	check, adjust to correct level.
Testers	connect: oil remote thermometer (018) 124 589 07 21 00, lambda control tester (012), twin socket (031), exhaust probe (005) 126 589 11 63 00, CO analyzer (006), engine tester with oscilloscope (030), trigger clamp (011), multimeter (003), test cable (033) 102 589 04 63 00.
Front wheels	secure. Place wheel chocks about 100 mm in front of front wheels.
Tyre pressure of rear wheels	check, adjust to specified pressure.
Extraction device (014)	fit on to exhaust tailpipe.
Contents of trunk	check. Remove any heat-sensitive and heavy objects.
Engine oil temperature	warm to about 80°C at part throttle, while checking speedometer.
Engine	cool with fan (053). Do not allow engine oil temperature to rise above 120°C.
Oscilloscope image	analyze under load (see Diagnosis Manual Engine Volume 1 Register C).
Full load output	test (see table). Pay attention to notes regarding output and exhaust test. Coolant temperature: 80 °C = 300 Ω Intake air temperature: 20 °C = 2.5 kΩ ⚠ Run engine for testing full load output only as long as is necessary for reading the instrument.

Emission levels	test under load. If the emission levels are not achieved, then: 1. test lambda control. 2. test throttle valve switch, replace (07.3–1689). 3. check fuel pressures and internal leaktightness (07.3–1603). 4. replace fuel distributor (07.3–1674).

Notes

On vehicles fitted with catalytic converter and lambda control, the mixture composition cannot be assessed from measuring the exhaust gases at the tailpipe when the engine is idling and running at part load, but only by measuring the on/off ratio.

The on/off ratio at part load must remain within the lambda control range (pointer fluctuates, not at lean or rich stop). At full load the on/off ratio is constant (open-loop control, the CO emission levels at the exhaust tailpipe correspond to the standard and RÜF versions).

On vehicles fitted with catalytic converter, the operation must be interrupted immediately if combustion faults exist otherwise damage to the catalytic converter cannot be excluded.

Engine output and emission level

Engine			103.940	103.940	103.940	103.941	103.941
Model			124.007 124.026	124.007 124.026	124.007 124.026	126.020	126.020
Version			NV (RÜF)	RÜF	KAT	NV (RÜF)	RÜF
Function test [1]	Manual transmission in 3rd gear	km/h	100	100	100	100	100
		kW	65	69	66	68	72
	Automatic transmission in Drive mode "3"	km/h	90	90	90	90	90
		kW	63	67	64	66	70
Output test full load [1]		1/min	5500	5500	5500	5500	5500
	Manual transmission in 3rd gear	kW	85	92	89	85	92
⚠	Automatic transmission in Drive mode "3"	kW	82	89	86	82	89
Emission test	Idle speed	1/min	650–750	650–750	650–750	650–750	650–750
		% CO	1 ± 0.5	1 ± 0.5	≤ 0.5 [2]	1 ± 0.5	1 ± 0.5
		Lambda control %	–	–	[3]	–	–
	Full load 3rd gear Drive mode "3"	% CO [4]	1.5–5	1.5–5	1.5–5	1.5–5	1.5–5
		1/min	3500	3500	3500	3500	3500
	Upper part load 4th gear Drive mode "D" 120 km/h, 24 kW	% CO	0.1–0.8	0.1–0.8	[5]	0.1–0.8	0.1–0.8
	Upper part load 5th gear 120 km/h, 24 kW	% CO	–	–	–	–	–
	Lower part load 4th gear Drive mode "D" 50 km/h, 7.0 kW	% CO	0.1–0.8	0.1–0.8	[5]	0.1–0.8	0.1–0.8
	Lower part load 5th gear 50 km/h, 7.0 kW	% CO	–	–	–	–	–

[1] The test data are minimum outputs.
⚠ Test output only with simulated coolant temperature of 80 °C (use 2 Ω decades).

[2] When performing special exhaust emission test (ASU).

[3] Test lambda control at 2500/min and read off average value; detach regeneration line at regeneration valve for this purpose and seal. Compare this reading with idle speed reading. The average value at idle speed must not differ by more than ± 10 from the reading obtained at 2500/min.

[4] During full load test of vehicles with lambda control, lambda control switches to open-loop value.

[5] Lambda readout fluctuates.

Engine output and emission level

Engine			103.941	103.942	103.942	103.942	103.943
Model			126.020	201.029	201.029	201.029	124.226
Version			KAT (CH) KAT (S) KAT	NV (RÜF)	RÜF	KAT (CH) KAT (S) KAT	NV (RÜF)
Function test [1]	Manual transmission in 3rd gear	km/h	100	100	100	100	100
		kW	69	67	71	68	68
	Automatic transmission in Drive mode "3"	km/h	90	90	90	90	90
		kW	67	60	64	61	59
Output test full load [1]		1/min	5500	5500	5500	5500	5500
	Manual transmission in 3rd gear	kW	89	85	92	89	82
⚠	Automatic transmission in Drive mode "3"	kW	86	82	89	86	79
Emission test	Idle speed	1/min	650–750	650–750	650–750	650–750	650–750
		% CO	≤ 0.5 [2]	1 ± 0.5	1 ± 0.5	≤ 0.5 [2]	1 ± 0.5
		Lambda control %	[3]	–	–	[3]	–
	Full load 3rd gear Drive mode "3"	% CO [4]	1.5–5	1.5–5	1.5–5	1.5–5	1.5–5
		1/min	3500	3500	3500	3500	3500
	Upper part load 4th gear Drive mode "D" 120 km/h, 24 kW	% CO	[5]	0.1–0.8	0.1–0.8	[5]	0.1–0.8
	Upper part load 5th gear 120 km/h, 24 kW	% CO	–	–	–	–	–
	Lower part load 4th gear Drive mode "D" 50 km/h, 7.0 kW	% CO	[5]	0.1–0.8	0.1–0.8	[5]	0.1–0.8
	Lower part load 5th gear 50 km/h, 7.0 kW	% CO	–	–	–	–	–

[1] The test data are minimum outputs.
⚠ Test output only with simulated coolant temperature of 80 °C (use 2 Ω decades).

[2] When performing special exhaust emission test (ASU).

[3] Test lambda control at 2500/min and read off average value; detach regeneration line at regeneration valve for this purpose and seal. Compare this reading with idle speed reading. The average value at idle speed must not differ by more than ± 10 from the reading obtained at 2500/min.

[4] During full load test of vehicles with lambda control, lambda control switches to open-loop value.

[5] Lambda readout fluctuates.

Engine output and emission level

Engine			103.943	103.943	103.980	103.980	103.981
Model			124.226	124.226	124.030	124.030	126.024 126.025
Version			RÜF	KAT (CH) KAT	Std.	Std. KAT	NV (RÜF)
Function test [1]	Manual transmission in 3rd gear	km/h	100	100	100	100	100
		kW	72	69	75	–	80
	Automatic transmission in Drive mode "3"	km/h	90	90	90	90	90
		kW	63	60	70	–	74
Output test full load [1]		1/min	5500	5500	5500	5500	5500
	Manual transmission in 3rd gear	kW	89	86	105	–	97
⚠	Automatic transmission in Drive mode "3"	kW	86	83	102	–	94
Emission test	Idle speed	1/min	650–750	650–750	600–700	600–700	600–700
		% CO	1 ± 0.5	≤ 0.5 [2]	1 ± 0.5	1 ± 0.5 ≤ 1.5 [2]	1 ± 0.5
		Lambda control %	–	[3]	–	–	–
	Full load 3rd gear Drive mode "3"	% CO [4]	1.5–5	1.5–5	1.5–5	1.5–5	1.5–5
		1/min	3500	3500	3500	3500	3500
	Upper part load 4th gear Drive mode "D" 120 km/h, 24 kW	% CO	0.1–0.8	[5]	0.1–0.8	–	0.1–0.8
	Upper part load 5th gear 120 km/h, 24 kW	% CO	–	–	–	–	–
	Lower part load 4th gear Drive mode "D" 50 km/h, 7.0 kW	% CO	0.1–0.8	[5]	0.1–0.8	–	0.1–0.8
	Lower part load 5th gear 50 km/h, 7.0 kW	% CO	–	–	–	–	–

[1] The test data are minimum outputs.
⚠ Test output only with simulated coolant temperature of 80 °C (use 2 Ω decades).

[2] When performing special exhaust emission test (ASU).

[3] Test lambda control at 2500/min and read off average value; detach regeneration line at regeneration valve for this purpose and seal. Compare this reading with idle speed reading. The average value at idle speed must not differ by more than ± 10 from the reading obtained at 2500/min.

[4] During full load test of vehicles with lambda control, lambda control switches to open-loop value.

[5] Lambda readout fluctuates.

Engine output and emission level

Engine			103.981	103.982	103.982	103.982	103.982
Model			126.024 126.025	126.024 126.025	107.041	107.041	107.041
Version			RÜF	KAT (CH) KAT (S) KAT	NV (RÜF)	RÜF	KAT (CH) KAT
Function test [1]	Manual transmission in 3rd gear	km/h	100	100	100	100	100
		kW	84	82	77	80	78
	Automatic transmission in Drive mode "3"	km/h	90	90	90	90	90
		kW	78	76	72	75	73
Output test full load [1]		1/min	5500	5500	5200	5200	5200
	Manual transmission in 3rd gear	kW	104	100	92	100	96
⚠	Automatic transmission in Drive mode "3"	kW	101	97	89	96	92
Emission test	Idle speed	1/min	600–700	600–700	600–700	600–700	600–700
		% CO	1 ± 0.5	≤ 0.5 [2]	1 ± 0.5	1 ± 0.5	≤ 0.5 [2]
		Lambda control %	–	[3]	–	–	[3]
	Full load 3rd gear Drive mode "3"	% CO [4]	1.5–5	1.5–5	1.5–5	1.5–5	1.5–5
		1/min	3500	3500	3500	3500	3500
	Upper part load 4th gear Drive mode "D" 120 km/h, 24 kW	% CO	0.1–0.8	[5]	0.1–0.8	0.1–0.8	[5]
	Upper part load 5th gear 120 km/h, 24 kW	% CO	–	–	–	–	–
	Lower part load 4th gear Drive mode "D" 50 km/h, 7.0 kW	% CO	0.1–0.8	[5]	0.1–0.8	0.1–0.8	[5]
	Lower part load 5th gear 50 km/h, 7.0 kW	% CO	–	–	–	–	–

[1] The test data are minimum outputs.
⚠ Test output only with simulated coolant temperature of 80 °C (use 2 Ω decades).

[2] When performing special exhaust emission test (ASU).

[3] Test lambda control at 2500/min and read off average value; detach regeneration line at regeneration valve for this purpose and seal. Compare this reading with idle speed reading. The average value at idle speed must not differ by more than ± 10 from the reading obtained at 2500/min.

[4] During full load test of vehicles with lambda control, lambda control switches to open-loop value.

[5] Lambda readout fluctuates.

Engine output and emission level

Engine			103.983	103.983	103.983	103.983	103.983
Model			124.030 124.050	124.030 124.050	124.030 124.050	124.090	124.090
Version			NV (RÜF)	RÜF	KAT (CH) KAT (S) KAT	NV (RÜF)	RÜF
Function test [1]	Manual transmission in 3rd gear	km/h	100	100	100	100	100
		kW	71	75	73	77	80
	Automatic transmission in Drive mode "3"	km/h	90	90	90	90	90
		kW	66	70	68	72	75
Output test full load [1]		1/min	5500	5500	5500	5500	5500
	Manual transmission in 3rd gear	kW	97	104	100	97	104
⚠	Automatic transmission in Drive mode "3"	kW	94	101	97	94	101
Emission test	Idle speed	1/min	600–700	600–700	600–700 [6]	600–700	600–700
		% CO	1 ± 0.5	1 ± 0.5	≤ 0.5 [2]	1 ± 0.5	1 ± 0.5
		Lambda control %	–	–	[3]	–	–
	Full load 3rd gear Drive mode "3"	% CO [4]	1.5–5	1.5–5	1.5–5	1.5–5	1.5–5
		1/min	3500	3500	3500	3500	3500
	Upper part load 4th gear Drive mode "D" 120 km/h, 24 kW	% CO	0.1–0.8	0.1–0.8	[5]	0.1–0.8	0.1–0.8
	Upper part load 5th gear 120 km/h, 24 kW	% CO	–	–	–	–	–
	Lower part load 4th gear Drive mode "D" 50 km/h, 7.0 kW	% CO	0.1–0.8	0.1–0.8	[5]	0.1–0.8	0.1–0.8
	Lower part load 5th gear 50 km/h, 7.0 kW	% CO	–	–	–	–	–

[1] The test data are minimum outputs.
⚠ Test output only with simulated coolant temperature of 80 °C (use 2 Ω decades).

[2] When performing special exhaust emission test (ASU).

[3] Test lambda control at 2500/min and read off average value; detach regeneration line at regeneration valve for this purpose and seal. Compare this reading with idle speed reading. The average value at idle speed must not differ by more than ± 10 from the reading obtained at 2500/min.

[4] During full load test of vehicles with lambda control, lambda control switches to open-loop value.

[5] Lambda readout fluctuates.

[6] As of 06/90: 650–750.

Engine output and emission level

Engine			103.983	103.984	103.984	103.985	103.985
Model			124.090	129.060	129.060	124.230	124.230
Version			KAT (CH) KAT (S) KAT	RÜF	KAT	NV (RÜF)	RÜF
Function test [1]	Manual transmission in 3rd gear	km/h	100	100	100	100	100
		kW	78	94	94	75	79
	Automatic transmission in Drive mode "3"	km/h	90	90	90	90	90
		kW	73	69	69	65	69
Output test full load [1]		1/min	5500	5500	5500	5500	5500
	Manual transmission in 3rd gear	kW	100	105	105	94	101
⚠	Automatic transmission in Drive mode "3"	kW	97	101	101	91	98
Emission test	Idle speed	1/min	600–700 [6]	650–750	650–750	600–700	600–700
		% CO	≤ 0.5 [2]	1 ± 0.5	≤ 0.5 [2]	1 ± 0.5	1 ± 0.5
		Lambda control %	3)	–	[3]	–	–
	Full load 3rd gear Drive mode "3"	% CO [4]	1.5–5	1.5–5	1.5–5	1.5–5	1.5–5
		1/min	3500	3500	3500	3500	3500
	Upper part load 4th gear Drive mode "D" 120 km/h, 24 kW	% CO	[5]	0.1–0.8	[5]	0.1–0.8	0.1–0.8
	Upper part load 5th gear 120 km/h, 24 kW	% CO	–	–	–	–	–
	Lower part load 4th gear Drive mode "D" 50 km/h, 7.0 kW	% CO	[5]	0.1–0.8	[5]	0.1–0.8	0.1–0.8
	Lower part load 5th gear 50 km/h, 7.0 kW	% CO	–	–	–	–	–

[1] The test data are minimum outputs.
⚠ Test output only with simulated coolant temperature of 80 °C (use 2 Ω decades).

[2] When performing special exhaust emission test (ASU).

[3] Test lambda control at 2500/min and read off average value; detach regeneration line at regeneration valve for this purpose and seal. Compare this reading with idle speed reading. The average value at idle speed must not differ by more than ± 10 from the reading obtained at 2500/min.

[4] During full load test of vehicles with lambda control, lambda control switches to open-loop value.

[5] Lambda readout fluctuates.

[6] As of 06/90: 650–750.

Engine output and emission level

Engine			103.985	103.985	103.985	103.985
Model			124.230	124.290	124.290	124.290
Version			KAT (CH) KAT (S) KAT	NV (RÜF)	RÜF	KAT (CH) KAT (S) KAT
Function test [1]	Manual transmission in 3rd gear	km/h	100	100	100	100
		kW	77	80	84	82
	Automatic transmission in Drive mode "3"	km/h	90	90	90	90
		kW	67	70	74	72
Output test full load [1]		1/min	5500	5500	5500	5500
	Manual transmission in 3rd gear	kW	97	95	102	98
⚠	Automatic transmission in Drive mode "3"	kW	94	92	99	95
Emission test	Idle speed	1/min	600–700 [6]	600–700	600–700	600–700 [6]
		% CO	≤ 0.5 [2]	1 ± 0.5	1 ± 0.5	≤ 0.5 [2]
		Lambda control %	[3]	–	–	[3]
	Full load 3rd gear Drive mode "3"	% CO [4]	1.5–5	1.5–5	1.5–5	1.5–5
		1/min	3500	3500	3500	3500
	Upper part load 4th gear Drive mode "D" 120 km/h, 24 kW	% CO	[5]	0.1–0.8	0.1–0.8	[5]
	Upper part load 5th gear 120 km/h, 24 kW	% CO	–	–	–	–
	Lower part load 4th gear Drive mode "D" 50 km/h, 7.0 kW	% CO	[5]	0.1–0.8	0.1–0.8	[5]
	Lower part load 5th gear 50 km/h, 7.0 kW	% CO	–	–	–	–

[1] The test data are minimum outputs.
⚠ Test output only with simulated coolant temperature of 80 °C (use 2 Ω decades).

[2] When performing special exhaust emission test (ASU).

[3] Test lambda control at 2500/min and read off average value; detach regeneration line at regeneration valve for this purpose and seal. Compare this reading with idle speed reading. The average value at idle speed must not differ by more than ± 10 from the reading obtained at 2500/min.

[4] During full load test of vehicles with lambda control, lambda control switches to open-loop value.

[5] Lambda readout fluctuates.

[6] As of 06/90: 650–750.

Note

These tests must not be performed with the vehicles' own tyres as the test speed is in excess of 130 km/h.
At high speeds, initial invisible damage may occur to the tyres which results in subsequent consequential damage.
The engine output test should therefore only be employed if there is an expressed complaint regarding engine performance.
The function test at which the driving speed is below 130 km/h is sufficient for a general assessment of engine output.
When measuring engine output it is essential to take into account the various influencing factors.

Correction of engine output, see correction table.

Special tools

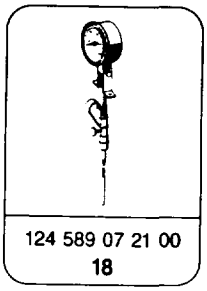

124 589 07 21 00
18

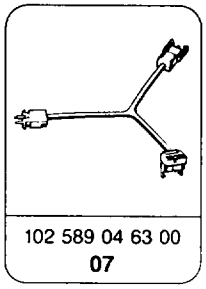

102 589 04 63 00
07

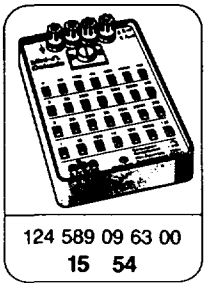

124 589 09 63 00
15 54

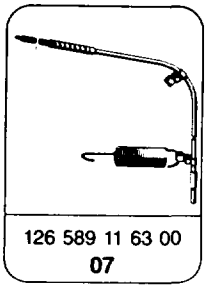

126 589 11 63 00
07

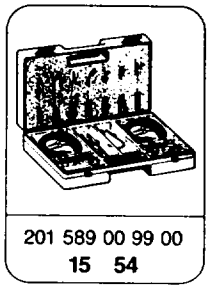

201 589 00 99 00
15 54

Commercially available tools and testers (see Workshop Equipment Manual)

Designation	e.g., Make, order no.
CO analyzer	
Engine tester (engine speed, dwell angle, ignition angle, oscilloscope, voltmeter)	Bosch, MOT 002.02 Sun, 1019
Lambda control tester	Hermann, L115
Twin socket	Hermann, ECD 53

Notes regarding engine output and emission test on the roller dynamometer, and also engine output correction, driving instructions and notes regarding procedure.

Engine output test

This test should only be performed if a complaint exists regarding engine performance.
The valid engine output reference values are minimum outputs and apply to vehicles with power assisted steering. Take into account barometer reading and intake air temperature (see correction table).

The stated engine output reference values are only achieved with the specified fuel, the indicated ignition setting and the indicated valve timing.

The engine output figures may be slightly reduced on vehicles on which ignition timing has been altered because of conversion from leaded to unleaded fuel.

Note
On such vehicles, the ignition timing is retarded if a coolant temperature of about 95 °C is exceeded. This results in a reduced engine output of about 2 – 5 %.

Test engine output only with a simulated coolant temperature of 80 °C.

The coolant temperature can be simulated with the Ω decade (special tool 124 589 09 63 00), 80 °C = 300 Ω.

To do this, unplug connector at the coolant temperature sensor and connect to ground via Ω decade.

2 Ω decades are required for this test in the case of the 4-pin temperature sensor.

On vehicles fitted with fault memory, the simulated fault in the fault memory must be erased.

On 4MATIC vehicles, ensure that a total test time of 15 minutes is not exceeded on the roller dynamometer.

The service valve must be moved into position "Test."

If a test time of more than 15 minutes is necessary, the vehicle must be driven for about 1 km on the road after a test period of 15 minutes.

Following this, it can be tested for a further 15 minutes on the roller dynamometer.

Emission test

The emission tests at idle speed, part load and full load are used to assess the mixture composition in the combustion chamber.

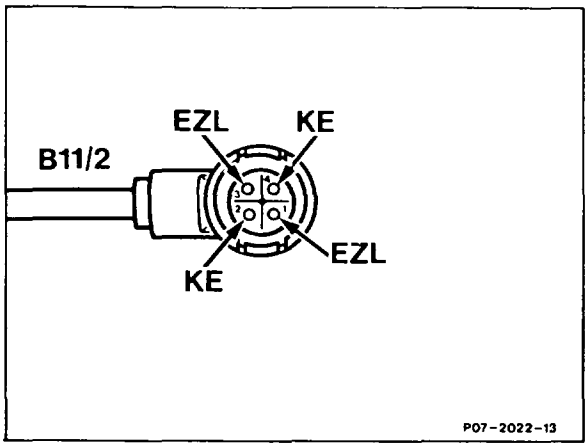

Coolant temperature sensor
Coupling pin assignment:
1 EZL/AKR temperature sensor
2 KE temperature sensor
3 Ground, EZL/AKR ignition control unit
4 Ground, KE ignition control unit

The emission test should be performed if complaints exist regarding engine running, fuel consumption and engine output.
It is not possible to obtain a statement regarding absolute fuel consumption.
The stated emission levels at part load apply only to switch position 1 of the resistance trimming plug for the fuel injection system (inscription ECE).
Test equipment operating on the infrared absorption method should be used for the emission tests.

On vehicles fitted with catalytic converter and lambda control, the mixture composition at idle speed and part load cannot be assessed by meauring the exhaust at the exhaust pipe but only by measuring the on/off ratio. On/off ratio at idle speed, see notes in table 1 and 3.

The on/off ratio at part load must remain within the lambda control range (pointer fluctuates, does not deflect to lean or rich).
At full load, the on/off ratio is constant (open-loop control, the CO emission level at the exhaust tailpipe correspond to the Standard and RÜF versions).

Engine output correction on the roller dynamometer

To determine the engine output, a standard directive has been specified for the European Community in conformity with 80/1269 EEC.
It differs from the previously applicable DIN 70020 Part 6, e.g. in respect of the atmospheric reference conditions (air temperature now 25 °C, air pressure 990 hPa (mbar) instead of 1013 hPa (mbar)).

The formula for determining the correction factors have also been modified. The air humidity is not taken into account in this respect.

Driving instructions, notes regarding procedure

It is essential to adhere to the following specifications in order to maintain tyre stress within permissible limits:

1 Tests musts not be performed on roller dynamometers with winter tyres. Workshop test tyres must be fitted. Only warming-up at part load (see step 8) is permissible.

2 Check the inflation pressure of the driving wheels, but to not increase pressure beyond the figure indicated for driving on roads.

3 A high axle load of the driving wheels is not permissible.

4 Limit the duration of the test to the time absolutely necessary for reading the instrument (about 5 seconds for engine output test, about 5 seconds for exhaust emission test).

5 Do not exceed a driven speed of more than 130 km/h (120 km/h with SR tyres). Fit shop test tyres for a test speed in excess of 130 km/h. On models 124, 126, 201 and 107, 6 1/2 J×15 H 2 ET 49 steel disc wheels with 195/65 R 15 tyres may be used; on model 129, 8J×16 H 2 ET 34 light alloy or steel disc wheels with 225/55 ZR 16 tyres.

If the roller diameter is 220–318 mm, shop test tyres must be fitted to vehicles with SR for speeds in excess of 100 km/h. Function and output tests at not more than 100 km/h may also be performed with the original tyres.

6 Observe the test instructions and the following sequence:
Warming up – output test – exhaust emissions test – full load, upper part load, lower part load – idle speed – idle speed exhaust emissions test.

The full load tests (engine output, exhaust emissions) should be performed directly after warming-up so long as the tyre temperature is still low as the temperature rises most sharply during these measurements.
Two repeat measurements after adjustment operations are permissible. Before performing further measurements, it is essential to wait (45 minutes) to allow all the components to cool down.

Note
On vehicles fitted with catalytic converter, the test procedure must be immediately interrupted if combustion faults occur, otherwise damage to the catalytic converter cannot be ruled out.

Vehicles with ASR:
Unplug coupling from ABS/ASR control unit.

Vehicles with 4MATIC:
Move service valve into "Test" position.
Do not exceed a total test time of more than 15 minutes.

7 Cool vehicle with the fan (minimum capacity 15 000 m^3/h). Direct air flow at radiator and underside of vehicle (oil sump, exhaust, catalytic converter, tyres). Position fan about 1 m away from vehicle.
The minimum air throughput of 15 000 m^3/h is also adequate for cooling vehicles fitted with a catalytic converter.

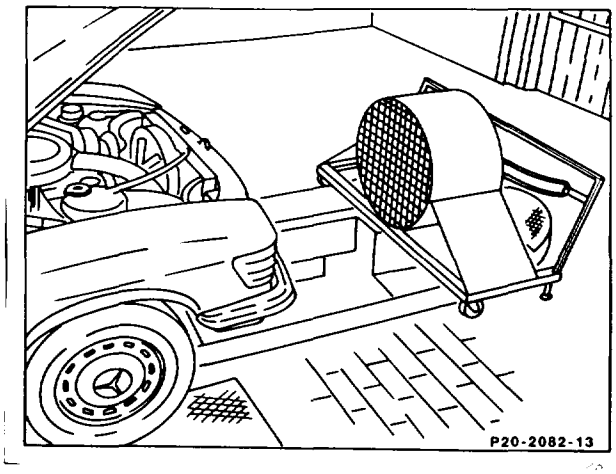

8 Warm-up vehicle at part load (drive mode "3" or 3rd gear, approx. 60 km/h, approx. 25 kW) up to an oil temperature of 80 °C.

9 Insert exhaust probe (special tool 126 589 11 63 00) at least 300 mm deep into the exhaust pipe.

10 **When performing engine output test,** drive in the specified gear at the stated engine speed and run engine at full load.
Read off instruments.
Release accelerator.
Compare indicated engine output with reference value, taking into account vehicle equipment, barometer level, coolant temperature and intake temperature (see correction table for engine output correction).

Test output only at the a simulated coolant temperature of 80 °C.

The coolant temperature can be simulated with the Ω decade (special tool 124 589 09 63 00), 80 °C = 300 Ω.

To do this, unplug connector at the coolant temperature sensor and connect to ground via Ω decade.

2 Ω decades are required for this test in the case of the 4-pin temperature sensor.

On vehicles fitted with fault memory, the simulated fault in the fault memory must be erased.

11 **When performing exhaust emissions test,** drive in the specified gear at the indicated engine speed or road speed and at dynamometer setting of full load or part load.

Do not drive for longer than is necessary for reading the instruments.
Detach crankcase breather.
The air cleaner must be installed.
The exhaust emissions test at part load should be performed at an oil temperature between 75°C and 85°C.
If necessary, the engine must be allowed to cool down after the full load run.

12 **When performing exhaust emissions test,** at idle speed, an oil temperature of 60–80°C is necessary. The cooling fan must be switched off. Run engine at idle speed for 5 minutes to stabilize it.

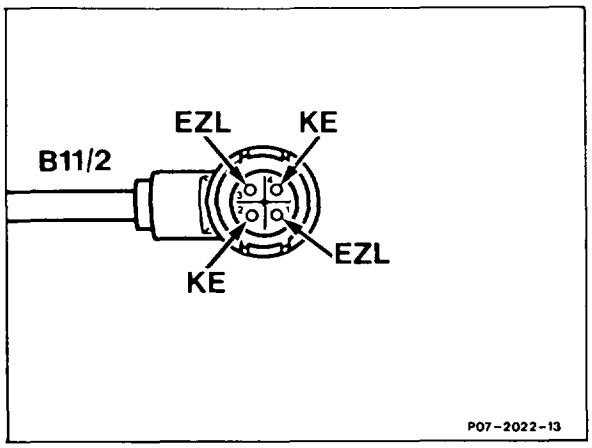

Coolant temperature sensor
Coupling pin assignment
1 EZL/AKR temperature sensor
2 KE temperature sensor
3 Ground, EZL/AKR ignition control unit
4 Ground, KE ignition control unit

Use of correction table

All the engine output figures relate to normal operating conditions:

a)	Reference pressure:	990 hPa = 990 mbar
b)	Reference intake air temperature:	+25 °C

The engine output measured on the dynamometer must be corrected if other test conditions exist to enable it to be compared with the engine output figures in the technical documentation.

Barometric pressure measuring system of weather station

The barometer of the weather station indicates the air pressure related to mean sea level (MSL). Before using the weather station, the barometer must be set to the air pressure stated by the local meteorological office.

In addition to the barometer, it is necessary to take into account the altitude and intake air temperature.

Engine output correction formula	$Ne_o = Ne \times K_H$

Ne_o = output related to normal operating conditions in kW.

Ne = measured engine output on dynamometer in kW.

K_H = correction for intake air temperature, barometer level and altitude of respective test location.

Reference should be made to the correction table for the engine output correction factors.

Calculation example
(The figures for this example are indicated in the drawing.)

Measured engine output:	Ne	=	100 kW
Barometer level (related to MSL):	p	=	955 hPa (955 mbar)
Altitude of test location:	400	m	above MSL
Intake air temperataure:	t	=	+20 °C

Hence:

p test location	= p barometer – p altitude
p test location	= 955 hPa – 46 hPa
	= 909 hPa ≈ 910 hPa
K_H	= 1.0787 (from correction table 910 hPa, +20 °C)
Ne_o	= measured engine output Ne × correction K_H
Hence Ne_o	= 100 kW × 1.0787 = 108 kW

Engine output correction on dynamometer for spark-ignition and car diesel engines

Air pressure p hPA (mbar)	Correction factor										
1040	0.9111	0.9194	0.9277	0.9358	0.9439	0.9519	0.9599	0.9678	0.9756	0.9833	0.9910
1035	0.9155	0.9239	0.9321	0.9403	0.9485	0.9565	0.9645	0.9724	0.9803	0.9881	0.9958
1030	0.9200	0.9284	0.9367	0.9449	0.9531	0.9612	0.9692	0.9772	0.9851	0.9929	1.0007
1025	0.9245	0.9329	0.9412	0.9495	0.9577	0.9659	0.9739	0.9819	0.9899	0.9977	1.0056
1020	0.9290	0.9375	0.9458	0.9542	0.9624	0.9706	0.9787	0.9867	0.9947	1.0026	1.0105
1015	0.9336	0.9421	0.9505	0.9589	0.9672	0.9754	0.9835	0.9916	0.9996	1.0076	1.0155
1010	0.9382	0.9467	0.9552	0.9636	0.9719	0.9802	0.9884	0.9965	1.0046	1.0126	1.0205
1005	0.9428	0.9514	0.9600	0.9684	0.9768	0.9851	0.9933	1.0015	1.0096	1.0176	1.0256
1000	0.9476	0.9562	0.9648	0.9732	0.9817	0.9900	0.9983	1.0065	1.0146	1.0227	1.0307
995	0.9523	0.9610	0.9696	0.9781	0.9866	0.9950	1.0033	1.0115	1.0197	1.0278	1.0359
990	0.9571	0.9659	0.9745	0.9831	0.9916	1.0000	1.0084	1.0166	1.0249	1.0330	1.0411
985	0.9620	0.9708	0.9795	0.9881	0.9966	1.0051	1.0135	1.0218	1.0301	1.0383	1.0464
980	0.9669	0.9757	0.9845	0.9931	1.0017	1.0102	1.0186	1.0270	1.0353	1.0436	1.0517
975	0.9719	0.9807	0.9895	0.9982	1.0068	1.0154	1.0239	1.0323	1.0406	1.0489	1.0571
970	0.9769	0.9858	0.9946	1.0033	1.0120	1.0206	1.0291	1.0376	1.0460	1.0543	1.0626
965	0.9819	0.9909	0.9998	1.0085	1.0173	1.0259	1.0345	1.0430	1.0514	1.0598	1.0681
960	0.9870	0.9960	1.0050	1.0138	1.0226	1.0313	1.0399	1.0484	1.0569	1.0653	1.0736
955	0.9922	1.0013	1.0102	1.0191	1.0279	1.0366	1.0453	1.0539	1.0624	1.0709	1.0793
950	0.9974	1.0065	1.0155	1.0245	1.0333	1.0421	1.0508	1.0594	1.0680	1.0765	1.0849
945	1.0027	1.0119	1.0209	1.0299	1.0388	1.0476	1.0564	1.0651	1.0737	1.0822	1.0907
940	1.0080	1.0172	1.0263	1.0354	1.0443	1.0532	1.0620	1.0707	1.0794	1.0880	1.0965
935	1.0134	1.0227	1.0318	1.0409	1.0499	1.0588	1.0677	1.0764	1.0851	1.0938	1.1023
930	1.0189	1.0282	1.0374	1.0465	1.0555	1.0645	1.0734	1.0822	1.0910	1.0997	1.1083
925	1.0244	1.0337	1.0430	1.0522	1.0613	1.0703	1.0792	1.0881	1.0969	1.1056	1.1143
920	1.0300	1.0393	1.0487	1.0579	1.0670	1.0761	1.0851	1.0940	1.1028	1.1116	1.1203
915	1.0356	1.0450	1.0544	1.0637	1.0729	1.0820	1.0910	1.1000	1.1089	1.1177	1.1264
910	1.0413	1.0508	1.0602	1.0695	**1,0787**	1.0879	1.0970	1.1060	1.1150	1.1238	1.1326
905	1.0470	1.0566	1.0660	1.0754	1.0847	1.0939	1.1031	1.1121	1.1211	1.1300	1.1389
900	1.0528	1.0624	1.0720	1.0814	1.0907	1.1000	1.1092	1.1183	1.1273	1.1363	1.1452
895	1.0587	1.0684	1.0779	1.0874	1.0968	1.1061	1.1154	1.1246	1.1336	1.1427	1.1516
890	1.0647	1.0744	1.0840	1.0935	1.1030	1.1124	1.1217	1.1309	1.1400	1.1491	1.1581
885	1.0707	1.0805	1.0901	1.0997	1.1092	1.1186	1.1280	1.1373	1.1465	1.1556	1.1646
880	1.0768	1.0866	1.0963	1.1060	1.1155	1.1250	1.1344	1.1437	1.1530	1.1621	1.1712
875	1.0829	1.0928	1.1026	1.1123	1.1219	1.1314	1.1409	1.1503	1.1596	1.1688	1.1779
870	1.0892	1.0991	1.1089	1.1187	1.1283	1.1379	1.1474	1.1569	1.1662	1.1755	1.1847
865	1.0954	1.1054	1.1153	1.1251	1.1349	1.1445	1.1541	1.1636	1.1730	1.1823	1.1915
860	1.1018	1.1119	1.1218	1.1317	1.1415	1.1512	1.1608	1.1703	1.1798	1.1892	1.1985
855	1.1083	1.1184	1.1284	1.1383	1.1481	1.1579	1.1676	1.1772	1.1867	1.1961	1.2055
850	1.1148	1.1294	1.1350	1.1450	1.1549	1.1647	1.1744	1.1841	1.1937	1.2032	1.2126
845	1.1214	1.1316	1.1417	1.1518	1.1617	1.1716	1.1814	1.1911	1.2007	1.2103	1.2198
840	1.1281	1.1383	1.1485	1.1586	1.1686	1.1786	1.1884	1.1982	1.2079	1.2117	1.2270
835	1.1348	1.1452	1.1554	1.1656	1.1756	1.1856	1.1955	1.2054	1.2151	1.2248	1.2344
830	1.1416	1.1521	1.1624	1.1726	1.1827	1.1928	1.2027	1.2126	1.2224	1.2321	1.2418
825	1.1486	1.1590	1.1694	1.1797	1.1899	1.2000	1.2100	1.2200	1.2298	1.2396	1.2493
820	1.1556	1.1661	1.1765	1.1869	1.1971	1.2073	1.2174	1.2274	1.2373	1.2472	1.2569
815	1.1627	1.1733	1.1838	1.1942	1.2045	1.2147	1.2249	1.2349	1.2449	1.2548	1.2647
810	1.1698	1.1805	1.1911	1.2015	1.2119	1.2222	1.2324	1.2426	1.2526	1.2626	1.2725
805	1.1771	1.1878	1.1985	1.2090	1.2195	1.2298	1.2401	1.2503	1.2604	1.2704	1.2804
800	1.1845	1.1953	1.2060	1.2166	1.2271	1.2375	1.2478	1.2581	1.2683	1.2784	1.2884
795	1.1920	1.2028	1.2135	1.2242	1.2348	1.2453	1.2557	1.2660	1.2762	1.2864	1.2965
790	1.1994	1.2104	1.2212	1.2320	1.2426	1.2532	1.2636	1.2740	1.2843	1.2945	1.3047
785	1.2071	1.2181	1.2290	1.2398	1.2505	1.2611	1.2717	1.2821	1.2925	1.3028	1.3130
780	1.2148	1.2259	1.2369	1.2478	1.2585	1.2692	1.2798	1.2904	1.3008	1.3111	1.3214
	0	5	10	15	**20**	25	30	35	40	45	50

Intake air temperature t + °C.

Altitude correction
If the air pressure is read off related to MSL (weather station), deduct the following air pressure in the correction table.

m	hPa (mbar)	m	hPa (mbar)	m	hPa (mbar)	m	hPa (mbar)	m	hPa (mbar)	m	hPa (mbar)
0	0	300	36	600	69	900	104	1400	159	2000	221
50	6	350	41	650	75	950	109	1500	170	2100	230
100	12	**400**	**46**	700	81	1000	115	1600	181	2200	239
150	18	450	52	750	86	1100	126	1700	192	2300	250
200	24	500	58	800	92	1200	137	1800	201	2400	259
250	30	550	63	850	98	1300	148	1900	210	2500	268

Layout of repair order
Notes for the use of operation numbers in the various workshop sectors.

Repair order procedure
The repair order should be completed by the Service Advisor in response to the customer complaint, taking into account the distance covered by the vehicle and any maintenance service which may be due at that moment or in the near future.
To provide the workship personnel with full information, the customer complaint should be described as precisely and comprehensively as possible in the repair order.
Two examples for specifying the operation numbers:

Example 1
Vehicles with complaints regarding engine running where no maintenance service is due.

In this case, carry out operation no. 07–1100 "Testing, adjusting engine." Add in any additional combined work, depending on the customer complaint.

Example 2
Vehicles with engine running complaint and for which a maintenance service is due.

To avoid any overlapping, do not state operation no. 07–1100 as it is already contained in part II of the maintenance service "Testing, adjusting engine."

In this case it is beneficial to have Part II performed in the test group in order to perform any additional operations which may be required as combined work.

Notes regarding work units microfilm "standard texts and flat rates"
In the works units documentation the marking * before the operation text indicates that a more detailed included text is listed following the respective operation group.

The flat rates stated are matched to the procedures in the corresponding microfilm Combustion.

Notes for the workshop foreman
The engine test program is structured in such a way that the order can be extended as required.

Extensions as a result of additionally necessary combined work must be justified by the test and measurement results.

07.3–1333 Determining fuel consumption by driving on the road

Operation no. of operation texts and work units or standard texts and flat rates
07–1333.

1 Fill up fuel tank with vehicle standing on level ground and in the presence of the customer.

2 Distance covered approx. 100 km, of which approx. 40 km motorway, approx. 60 km main roads and in towns.

3 After the run, fill up the fuel tank again and calculate fuel consumption.

Example:
Fuel consumption in liters/100 km

$$= \frac{\text{Quantity of fuel consumed in liters}}{\text{km covered}} \times 100$$

07.3–1603 Testing fuel pressures and internal leaktightness

Preceding work:
Testing, adjusting engine (07.3–1100).

Operation no. of operation texts and work units or standard texts and flat rates:
07–1603.

Basic and national versions

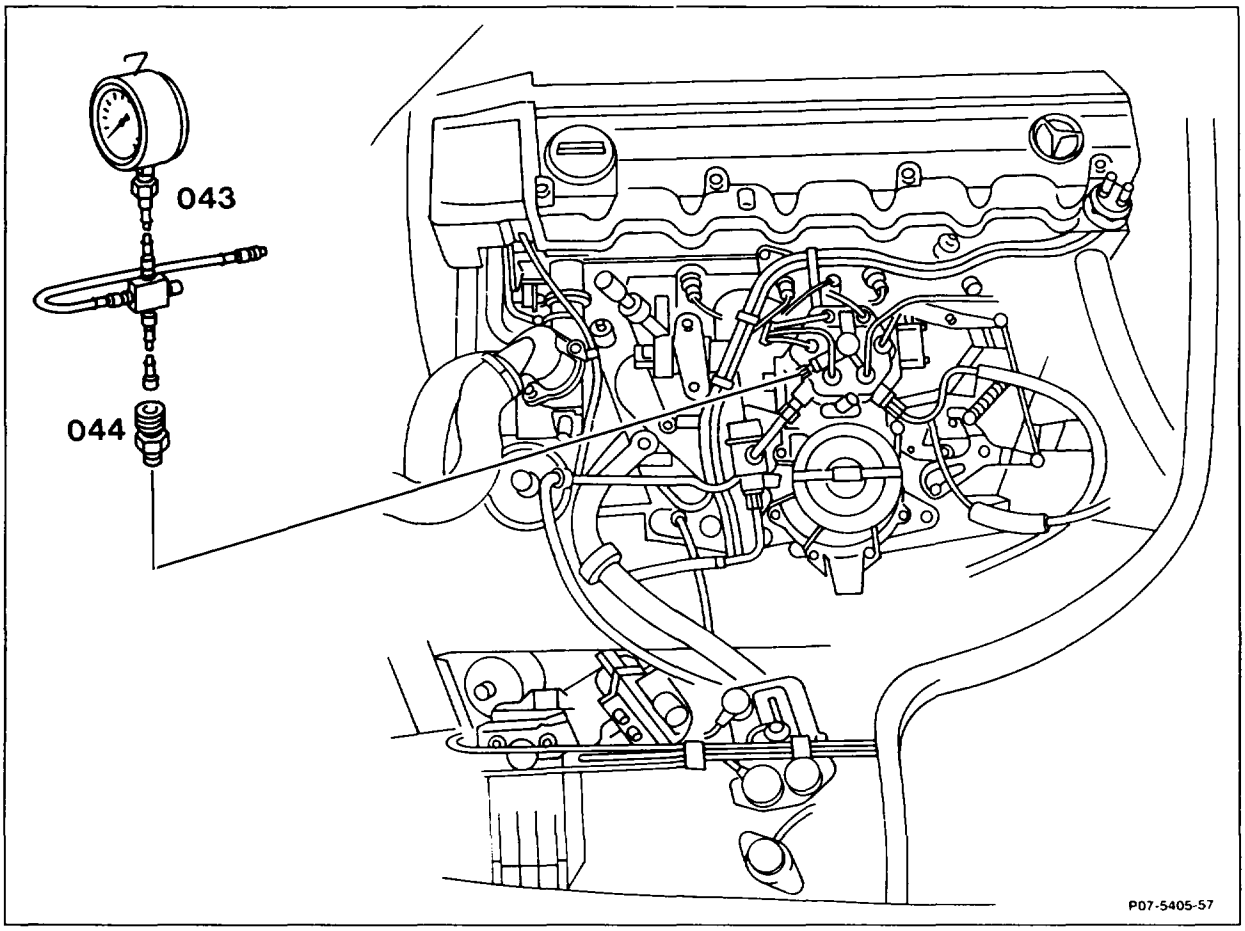

All fuel connections	check for leaks.
Ease of operation of air flow deflector plate and control plunger	check.
Control plunger	check for leaks.
Pressure measuring device (043), double union (044)	connect. Special tools 103 589 00 21 00, 102 589 06 63 00
System pressure	test.
Lower chamber pressure	test.

Decel fuel shutoff	test.
Full load enrichment	test.
Acceleration enrichment	test.
Fuel distributor and fuel pump	check for leaks.

Test and adjustment data

Fuel pressures (in bar gauge)

Engine			103
System pressure when engine cold or at normal operating temperature			5.3–5.5
Fuel holding pressure after > 30 minutes			≥2.8
Lower chamber pressure	when engine at normal operating temperature	approx.	0.4 [1])
	at coolant temperature of +20 °C	vehicle stationary or engine idling approx.	0.5 [1])
		and acceleration enrichment	≥3.8
	at decel fuel shutoff		5.3–5.5 [2])

[1]) Below previously measured system pressure.
[2]) Lower chamber pressure equal to system pressure.

Special tools

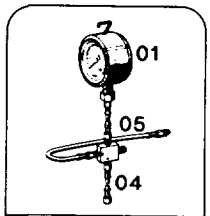

103 589 00 21 00
07

102 589 05 63 00
07

102 589 06 63 00
07

201 589 00 99 00
15 54

Note
Perform the leaktightness test only if complaints are received regarding starting hot engine.
After switching off engine, the fuel pressure must still be 2.5 bar after 30 minutes.
If no reaction is obtained when performing the pressure test of the additional functions, test overvoltage protection (07.3–0121).

Visual inspection

1 Take off air cleaner.

2 Check all fuel connections for leaks.

3 Detach fuel pump relays (N16/1 to N16/4) and briefly bridge the two contacts 7 and 8, on model 129 engine systems control unit MAS between contacts 1 and 2, for (J) (USA) as of model year 1990 at the KE control unit (N3) between contacts 11 and 20, in order to build up pressure.

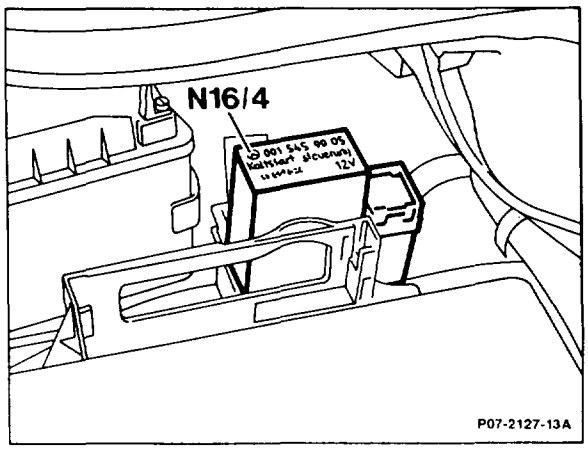

4 Check ease of operation of control lever (81) in the air flow sensor and of the control plunger (82) in the fuel distributor.
An even resistance must be felt over the entire travel.
No resistance must be felt when making a rapid upward movement as the more sluggish control plunger lifts off from the control lever. During a slow upward movement, the control plunger must follow the control lever and always make contact.

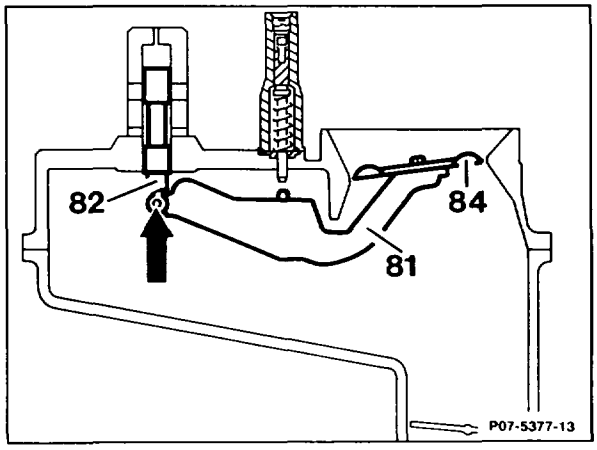

5 Check control plunger in fuel distributor for leaks.
Briefly press air flow sensor plate (84) down fully and hold tight in this position; a slight leak quantity is permissible when this is done.

Connecting pressure measuring device

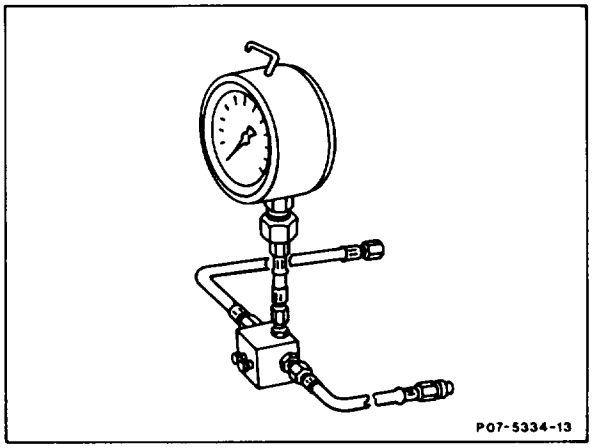

Pressure measuring device, version 1
Connection 1
Hose line to fuel distributor (lower chamber)
Connection 2
Hose line to pressure gauge
Connection 3
Hose line to fuel distributor
(upper chamber, cold start valve connection)

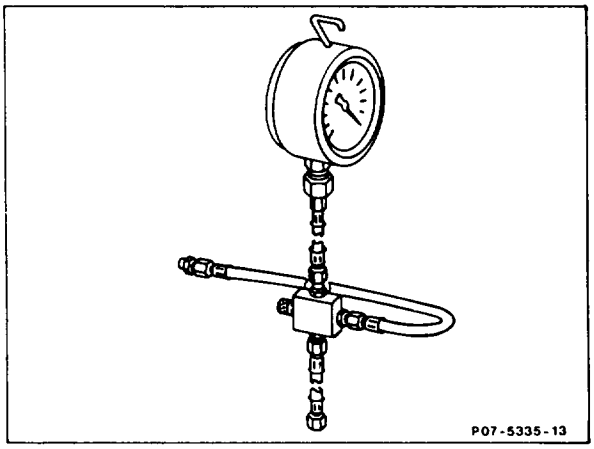

Pressure measuring device, version 2
Connection A
Hose line to fuel distributor (lower chamber)
Connection B
Hose line to fuel distributor
(upper chamber, cold start valve connection)

Note
To relieve the pressure on the seals, always hold valve screw or screws open. The connections of the three-way valve are numbered. When slackening the screw plug, ensure that the open-end wrench does not press on the air flow sensor position indicator. Failure to observe this instruction will cause damage to the position indicator.

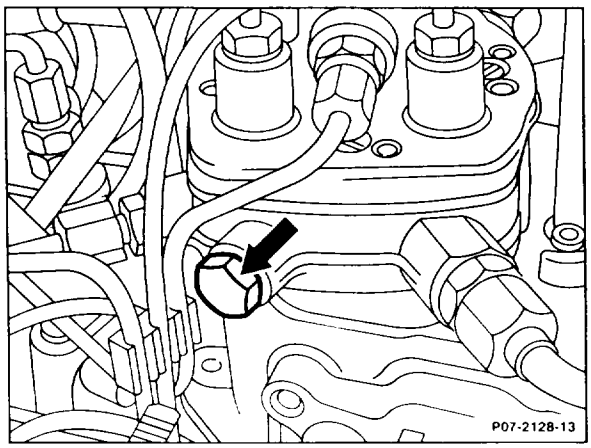

6 Unscrew plug (arrow) on the lower chamber of the fuel distributor.

7 Run hose line from connection A or 1, respectively, to lower chamber. Use double union M8 × 1/M12 × 1.5, special tool part no. 102 589 06 63 00, for this purpose.

8 Unscrew fuel line at start valve at fuel distributor.

9 Run hose line from connection B or 3, respectively, to fuel distributor.

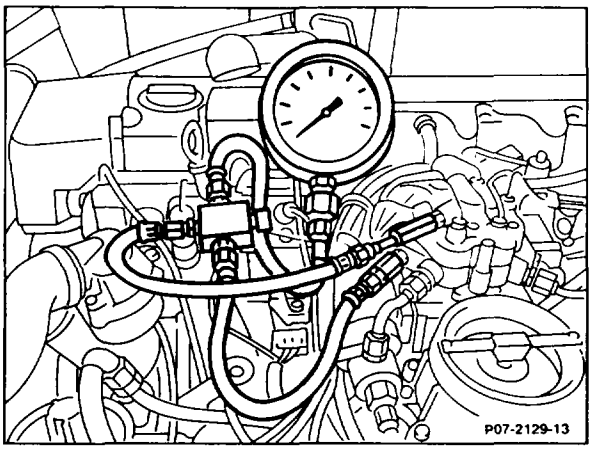

10 Position of valve screws:

a) System pressure
Pressure measuring device 1st version:
Close valve screw at connection 1, open valve screw at connection 3.

Pressure measuring device 2nd version:
Open valve screw.

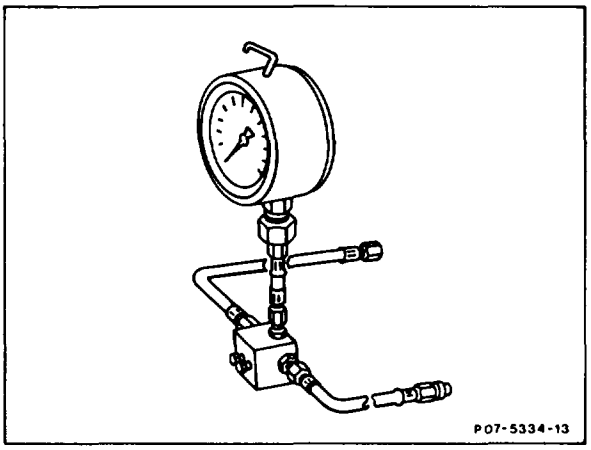

b) Lower chamber pressure, decel fuel shutoff, acceleration enrichment
Pressure measuring device 1st version:
Open valve screw of connection 1, close valve screw of connection 3.

Pressure measuring device 2nd version:
Close valve screw.

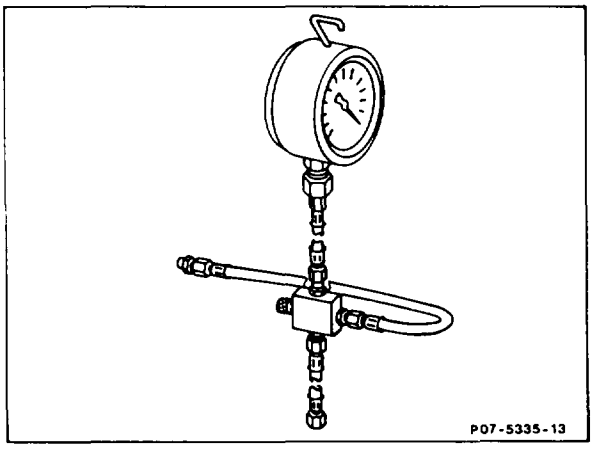

Testing

Perform the test of the system and lower chamber pressure with the engine switched off.

Test acceleration enrichment and decel fuel shutoff with the engine running.

Place pressure measuring device on cylinder head cover.

a) System pressure with engine cold or at normal operating temperature

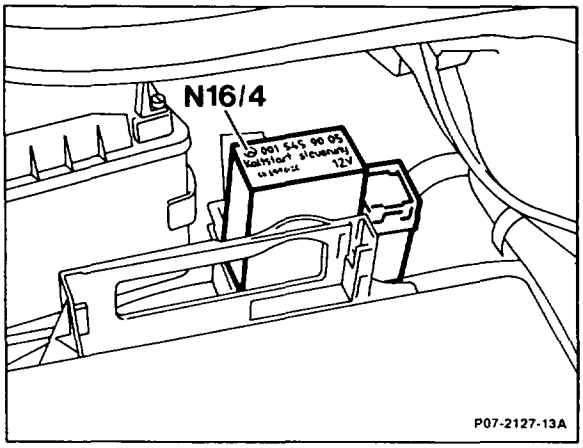

11 Detach fuel pump relays (N16/1 to N16/4) and bridge the contacts 7 and 8, on model 129 engine systems control unit MAS between contacts 1 and 2, for (USA) (J) as of model year 1990 on the KE control unit (N3) between contacts 11 and 20.
Pay attention to position of valve screws, read off system pressure.
Specification: 5.3–5.5 bar gauge.

12 If the specification is not achieved or is exceeded:

- test fuel pump (07.3–5701).
- replace diaphragm pressure regulator.
- check whether fuel return line is blocked.

13 Again open valve screw at connection 1.

b) Lower chamber pressure

14 Detach fuel pump relays (N16/1 to N16/4) and bridge contacts 7 and 8, on model 129 engine systems control unit MAS between contacts 1 and 2, for (USA) (J) as of model year 1990 on KE control unit (N3) between contacts 11 and 20. Switch on ignition.

15 With engine at normal operating temperature, unplug electrical connection at electro-hydraulic actuator.
Pay attention to position of valve screws.
Read off lower chamber pressure.

Specification at normal operating temperature approx 0.4 bar below system pressure.
When plugging in the electrical connection, no pressure change must take place.

Note
In the warming-up phase, a certain current exists at the actuator which is determined by the coolant temperature sensor and the control unit.

If the specification is not achieved:
- test coolant temperature sensor (07.3–0121).
- test control unit (07.3–0121).
- test electrohydraulic actuator (07.3–0121).

If the pressure in the lower chamber is above the specification, check whether restrictor in fuel distributor is blocked (07.3–1604).

16 Re-install fuel pump relays (N16/1 to N16/4).

c) Decel fuel shutoff

17 Warm engine up to normal operating temperature.

18 Pay attention to position of valve screws.

19 Run engine at idling speed, briefly increase engine speed to about 2500/min. As engine speed drops, the pressure in the lower chamber must rise to system pressure.
Combustion is restored at 1300/min.

If the specification is not achieved:

- Test microswitch (07.3–0121).
- Test control current at actuator (07.3–0121).
- Test control unit (07.3–0121).
- Test TD signal (07.3–0121).
- On vehicles fitted with Tempomat cruise control, test relay for cruise control (Repair Instructions Group 54).

d) Acceleration enrichment

20 Pay attention to position of valve screws.

21 Simulate "engine cold." This is done by connecting resistor with 2.5 kΩ, corresponding to approx. +20°C, between temperature sensor connection cable and vehicle ground (between contact 2 and 4 of 4-pin temperature sensor).
Special tool part no. 102 589 05 63 00.

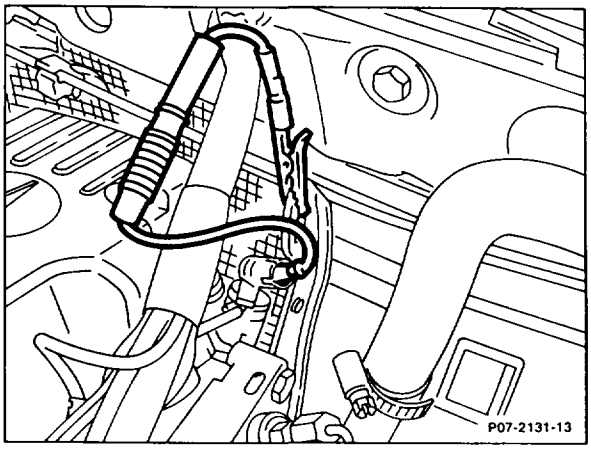

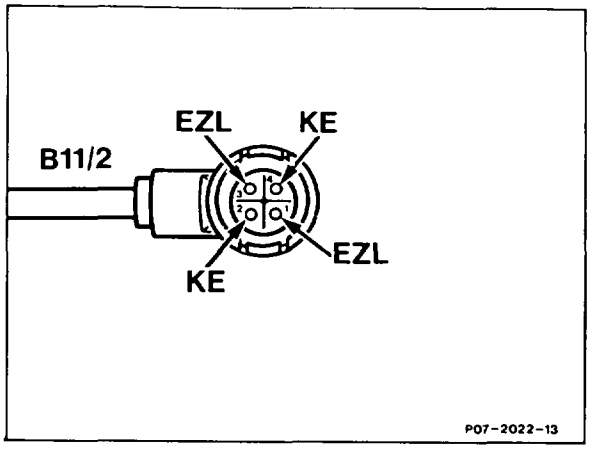

Coolant temperature sensor

Coupling pin assignment

1 EZL/AKR temperature sensor
2 KE temperature sensor
3 Ground, EZL/AKR ignition control unit
4 Ground, KE ignition control unit

22 Start engine, increase engine speed to approx. 2500/min by blipping throttle.
When engine speed rises, the lower chamber pressure must drop.

If the specification is not achieved:

- test air flow sensor position indicator (07.3–0121).
- test control current at actuator (07.3–0121).
- test control unit (07.3–0121).

Checking fuel distributor and fuel pump for leaks

23 Switch off engine. The pressure in the system should then drop below the opening pressure of the injection valve (approx. 2.8 bar gauge).

24 If the pressure drops immediately to 0 bar, replace non-return valve at fuel pump.

25 If the pressure drops slowly, unscrew fuel return line (51) at the diaphragm pressure regulator. No fuel must flow out (a slight leak quantity is permissible).

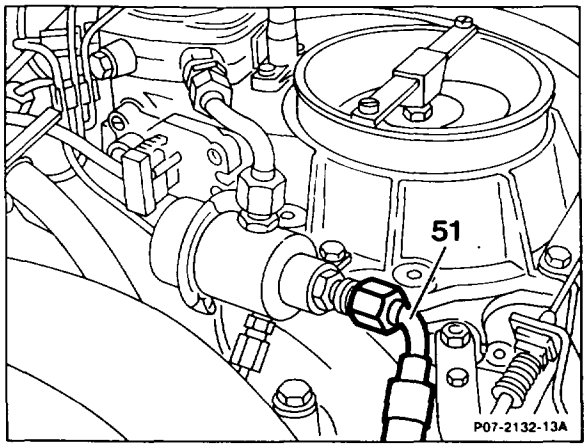

Note
If fuel flows out at the fuel line, seal off line.

26 Pinch leak line at the fuel accumulator. If the pressure does not drop, replace fuel accumulator (07.3–1683).

27 If, after checking for leaks, no leakage is found, check start valve for leaks. Remove start valve for this purpose (07.3–2353).

28 Disconnect pressure measuring device; collect fuel with a rag.

29 Connect fuel lines, run engine once again and check all connections for leaks.

07.3–1604 Testing restrictor in fuel distributor for clear passage

Preceding work:
Testing fuel pressures and internal leaktightness (07.3–1603).

Operation no. of operation texts and work units or standard texts and flat rates:
07–1604.

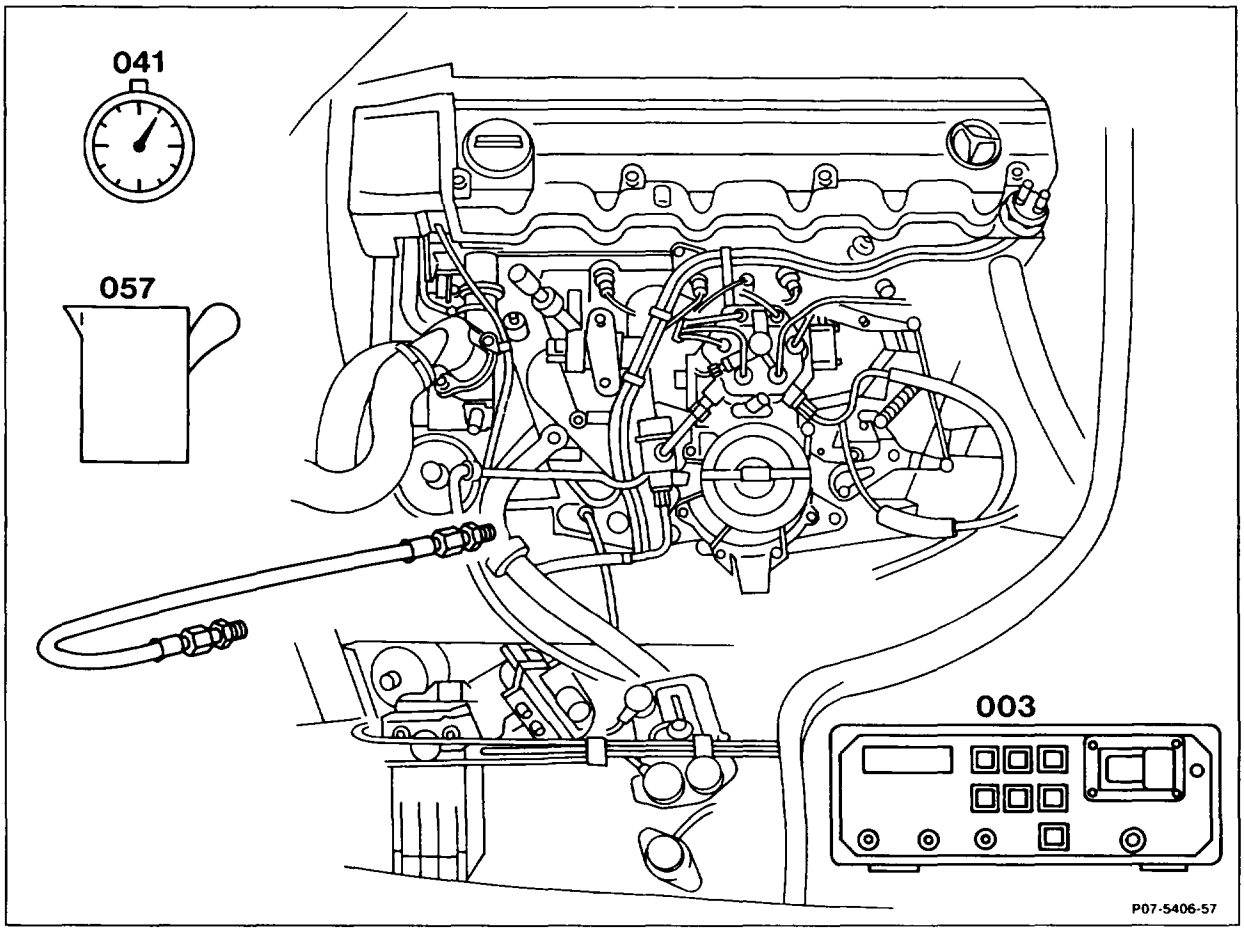

Coupling at actuator	unplug. If lambda control fitted, switch on ignition. Separate coupling of oxygen sensor in interior of vehicle.
Fuel line	unscrew at fuel distributor and seal with M10 × 1 screw plug.
Pressure hose	connect at fuel distributor and hold in measuring glass or beaker (057). Special tool 102 589 00 21 05.

Fuel pump relay	remove and bridge contacts 7 and 8, on model 129 engine systems control unit MAS between contacts 1 and 2 for (USA) (J) as of model year 1990 on KE control unit (N3) between contacts 11 and 20 (fuel pump runs). Special tool 201 589 00 99 00.
Contact bridge	remove after 1 minute. Special tool 201 589 00 99 00.
Restrictor	check for clear passage. Specification: 130–150 cm^3/min at minimum voltage of 11.5 V at fuel pump. If specification is not achieved, replace fuel distributor.

Special tools

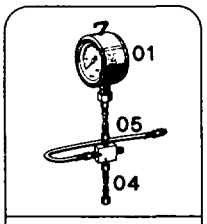

103 589 00 21 00
07

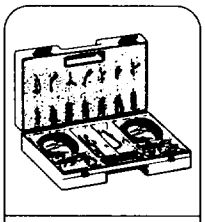

201 589 00 99 00
15 54

Commercially available tools and testers (see Workshop Equipment Manual)

Designation	e.g. Make, order no.
Multimeter	Sun, DMM-5
Measuring glass or beaker	
Stop watch	

Testing

1 Unplug coupling at actuator.
If lambda control fitted, switch on ignition.
Separate coupling of oxygen sensor in interior of vehicle.

2 Screw fuel connection line (arrow) between fuel distributor and diaphragm pressure regulator onto fuel distributor. Seal unscrewed connection line with M10×1 screw plug so that no fuel flows out.

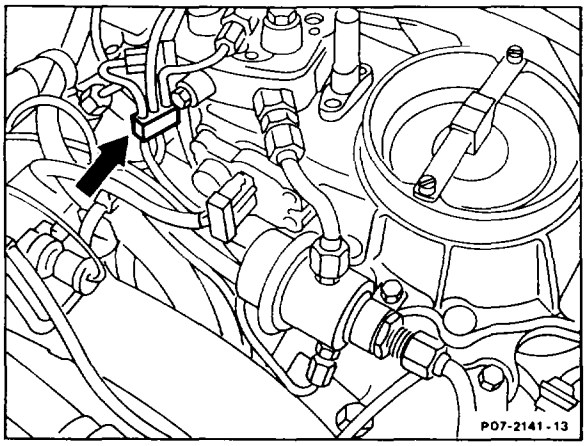

3 Connect fuel pressure hose to fuel distributor and hold in measuring glass or beaker.

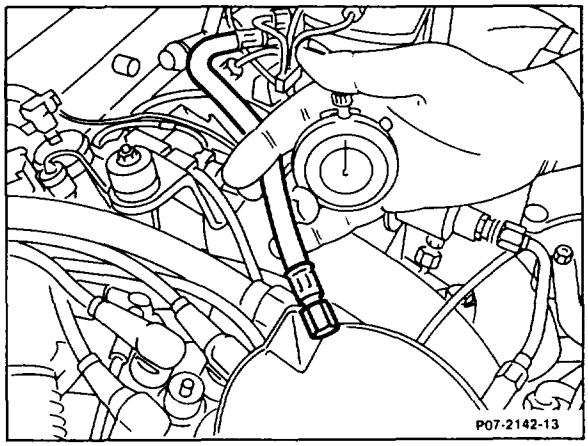

4 Remove fuel pump relays (N16/1 to N16/4).

Shown on models 124, 201

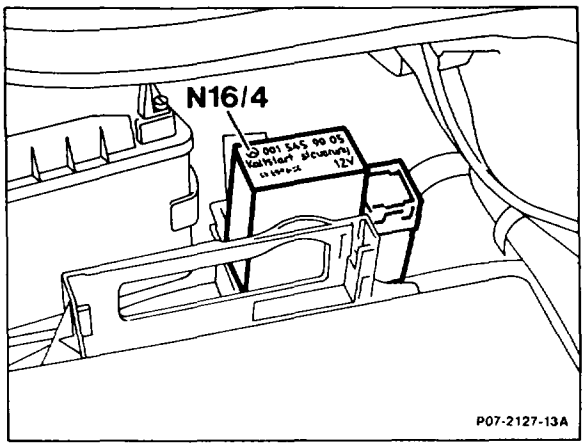

5 Bridge contacts 7 and 8, on model 129 engine systems control unit MAS between contacts 1 and 2, for (USA) (J) as of model year 1990 on KE control unit (N3) between contacts 11 and 20. This energizes the fuel pump.

Remove contact bridge after 1 minute.

If the specification of 130–150 cm^3/minute at a minimum voltage of 11.5 volts at the fuel pump is not achieved, replace fuel distributor.

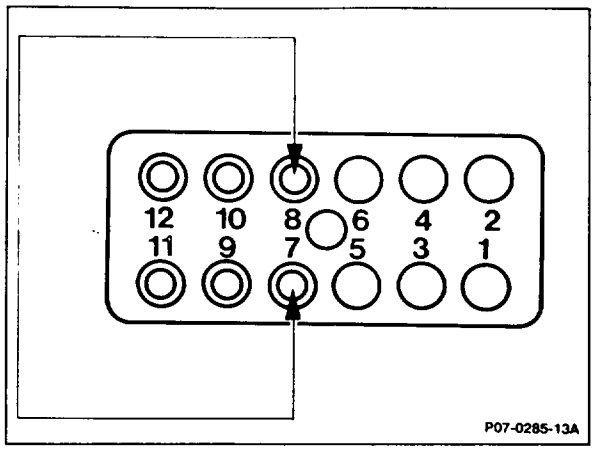

07.3–1607 Testing starting valve actuation

Preceding work:
Testing starting device (07.3–2353).

Operation no. of operation texts and work units or standard texts and flat rates:
07–1607.

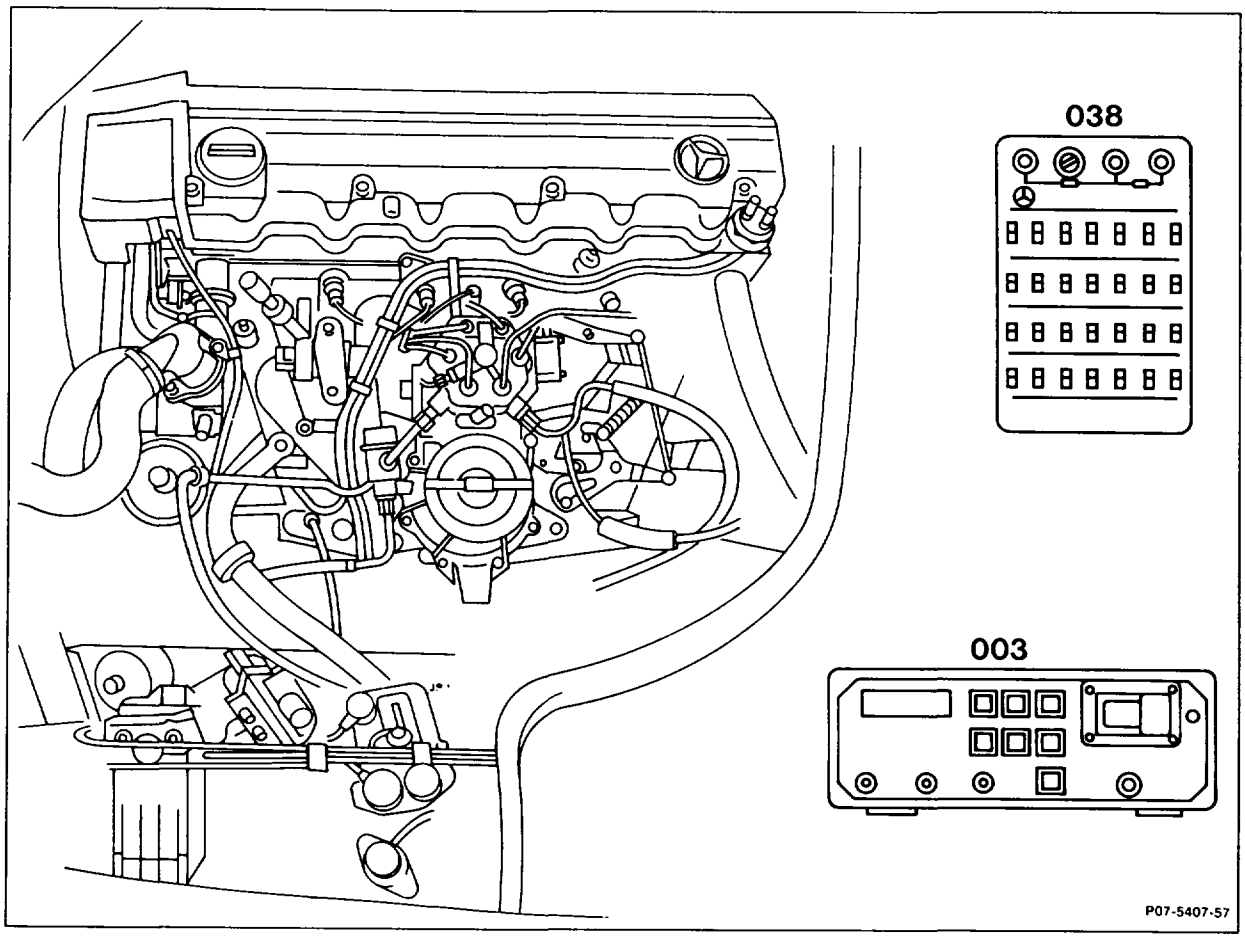

Testers	connect: multimeter (003), ohms decade (038) 124 589 09 63 00.
Starting voltage	test. Minimum 10 V in approx. 5 seconds.
Electric wiring	between starting valve and fuel pump relay, test for continuity. Resistance approx. 0 Ω.
Voltage at fuel pump relay and engine systems control unit	test. Contact 12 (terminal 50) at least 10 V, contact 2 (terminal TF) 3–5 V simulated at 10 kΩ.

Lambda tester	connect to diagnostic socket (X11).
Ignition	switch on. Readout 70% or for (USA) California 85%.
Coolant temperature sensor (B11/2) coupling	unplug. Readout 30%.
At coolant temperature (B11/2) coupling	simulate 10 kΩ with Ω decade, connect diagonally into circuit, until lambda tester indicates 70% or for (USA) California 85%.
Protective connector part no. 102 589 02 21 00	plug into diagnostic socket.

Special tools

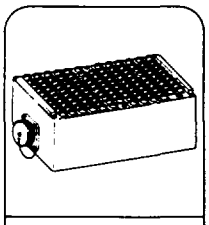

129 589 00 21 00
54

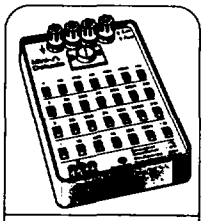

124 589 09 63 00
15 54

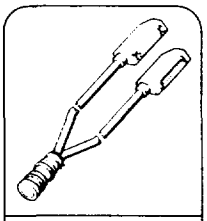

124 589 33 63 00
07 28 54

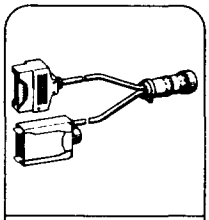

129 589 05 63 00
15

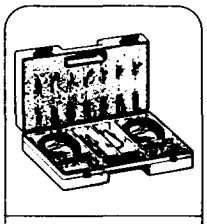

201 589 00 99 00
15 54

Commercially available tools and testers (see Workshop Equipment Manual)

Designation	e.g. Make, order no.
Multimeter	Sun, DMM-5

Symbols for testers

Multimeter

Contact box

Connector

Contact

Ground

Symbols for test mode with multimeter

Multimeter
DC voltage mode

Multimeter
Resistance mode

Test condition

- Battery voltage 11–14 V

Note

If the specification e.g. of point 1.0 is in order, it is not necessary to perform test step 1.1.
See appropriate wiring diagrams volume for wiring diagrams.

Test step	Test scope	Test connection	Operation/ Requirement	Specification	Possible cause/Remedy
1.0	Starting valve actuation	Y8 1 — 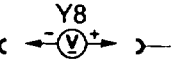 — 2	Connect Ω decade into circuit at coolant temperature sensor (B11/2) and simulate 10 kΩ resistance [1]). Detach cable from position sensor at EZL control unit (N1/2). Engine: **start**	approx. 10 V during starting	Fuel pump relays (N16/1 to N16/4) For (USA) (J) as of model year 1990 and model 129: Engine systems control unit (N16), KE control unit (N3), Open circuit in wiring, Terminal 50 missing
1.1	Voltage of terminal 50	N16/3 or N16/4 11 — 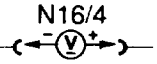 — 12	Fuel pump relays (N16/1 to N16/4) removed Engine: **start**	≥ 10 V	Open circuit in wiring

[1]) Resistance decade between contacts 1 and 3 of 4-pin temperature sensor.

Test step	Test scope	Test connection	Operation/ Requirement	Specification	Possible cause/Remedy
1.2	Cable	Y8 2 — N16/3 4	Ignition: **OFF** Fuel pump relays (N16/1 to N16/4) removed. Coupling at starting valve (Y8) unplugged	< 1 Ω	Open circuit in wiring
1.3	Cable **Model 129**	Y8 2 — N16 8	Ignition: **OFF** Coupling at starting valve (Y8) unplugged	< 1 Ω	Open circuit in wiring
1.4	Cable **Only (J), (USA) as of model year 1990**	Y8 2 — N3 20	Ignition: **OFF** Coupling at starting valve (Y8) unplugged	< 1 Ω	Open circuit in wiring
1.5	Cable	Y8 1 — N16/1 to N16/4 ⊥	Ignition: **OFF** Coupling at starting valve (Y8) unplugged	< 1 Ω	Open circuit in wiring
1.6	Starting valve (Y8) resistance	Y8 1 — 2	Ignition: **OFF** Coupling at starting valve (Y8) unplugged	10–25 Ω	Starting valve (Y8)

Coolant temperature sensor coupling, 4-pin

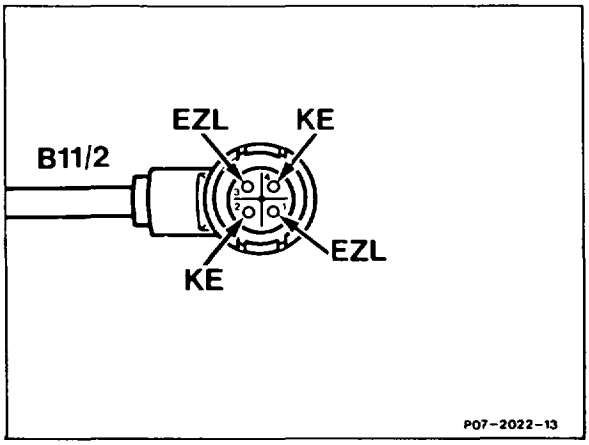

Coupling pin assignment:
1 EZL/AKR temperature sensor
2 KE temperature sensor
3 Ground, EZL/AKR ignition control unit
4 Ground, KE ignition control unit

Fuel pump relay test connection

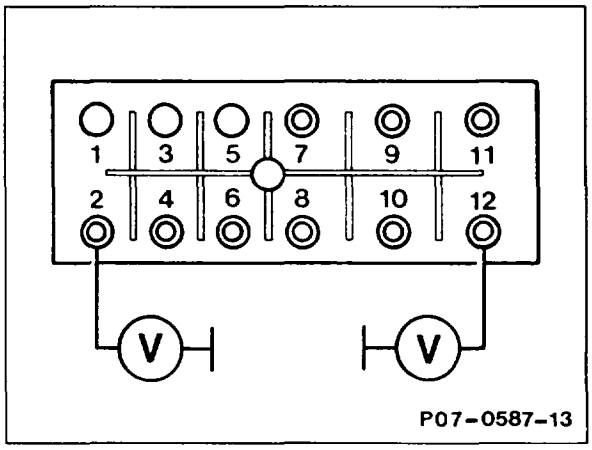

Socket 12/socket 2

Arrangement of EZL control unit position sensor

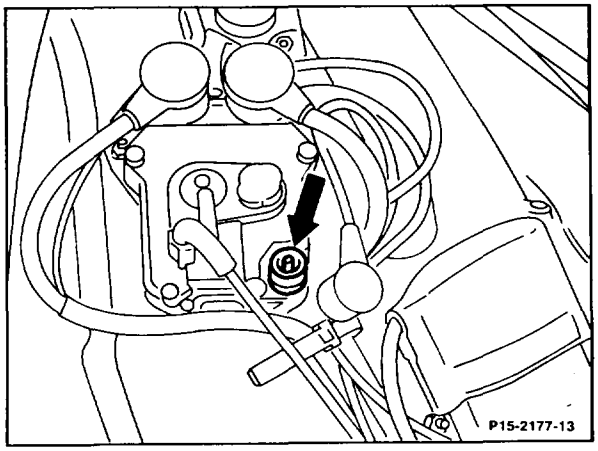

07.3–1609 Performing fuel quantity comparison measurement

Preceding work:
Testing, adjusting engine (07.3–1100).

Operation no. of operation texts and work units or standard texts and flat rates:
07–1609.

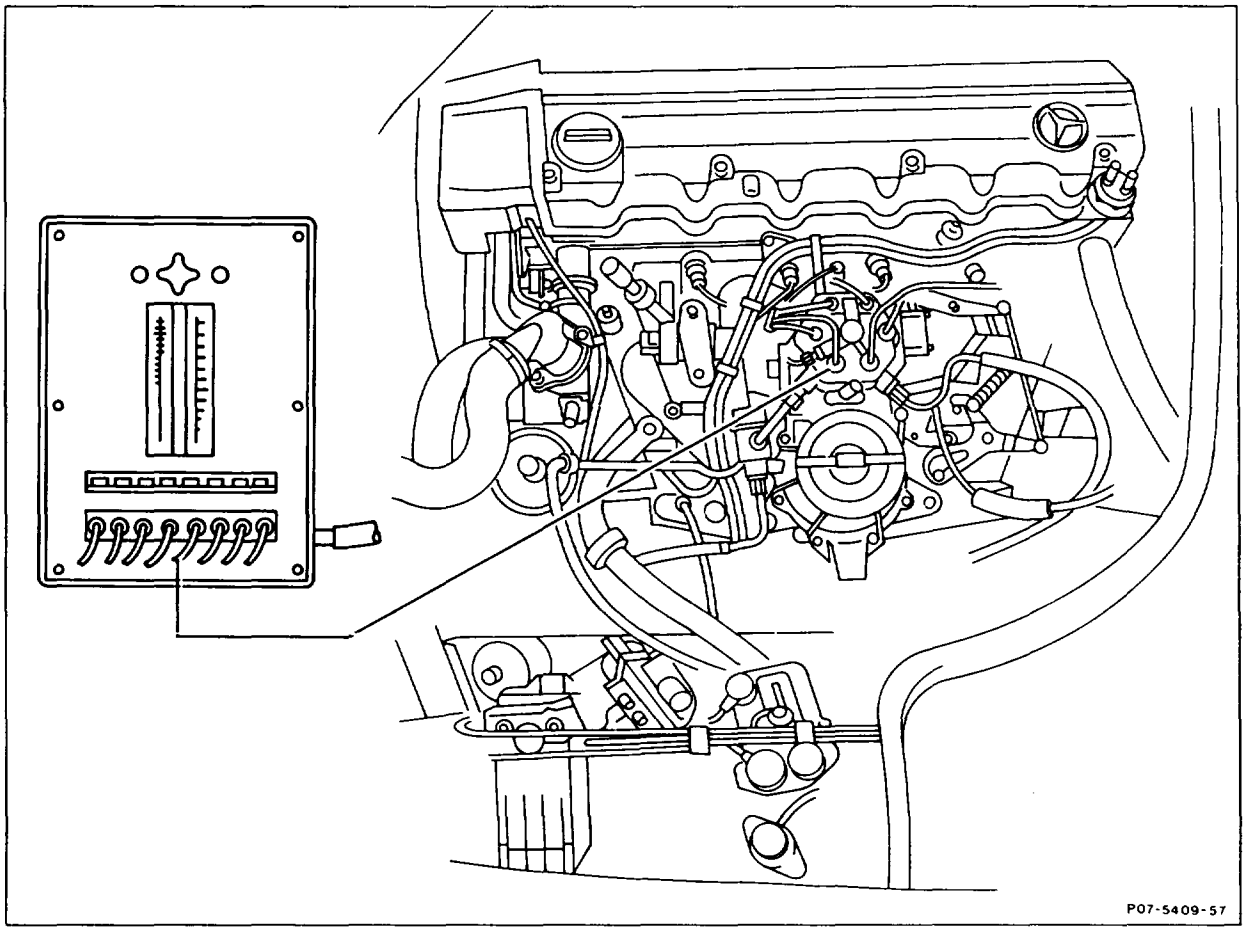

Fuel quantity comparison instrument	position on level point next to vehicle.
Injection lines	unscrew at fuel distributor and at injection valves, screw on. Clean connection points beforehand.
Fuel quantity comparison instrument	connect to fuel distributor (step 4).
Fuel return line	insert into filler neck of fuel tank.

Adjusting device for fixing air flow sensor plate	clamp onto stop bar of air flow sensor plate (step 5).
Fuel pump relays	remove and bridge contacts 7 and 8 (step 7), on model 129 engine systems control unit MAS between contacts 1 and 2 for (USA) (J) as of model year 1990 on KE control unit (N3) between contacts 11 and 20. Special tools 201 589 00 99 00.
Air flow sensor plate	deflect and press buttons 1 to 6 one after the other to vent tester.
Measuring instrument button 1	press and hold. Deflect sensor plate by means of adjusting device sufficiently to achieve 4 cm^3/min (idle speed quantity). Fix sensor plate in place.
Measuring instrument buttons 1 to 6	press one after the other and measure flow quantities and enter on test sheet B 20 800.99.472.00. Maximum permissible spread of cylinders to each other 0.4 cm^3/min (idle speed). Then, proceed exactly as described before. Check part and full load flow quantity. Deflect air flow sensor plate for this purpose. Idle speed 4 cm^3/min. Part load 30 cm^3/min. Full load 100 cm^3/min. Maximum permissible spread of cylinders to each other: Part load 4 cm^3/min. Full load 10 cm^3/min. If spread is not to tolerance, replace fuel distributor (07.3–1674).
Engine	run, check all fuel connections for leaks.
Idle speed	adjust (07.3–2053 or for (USA) 07.3–5203).

Special tool

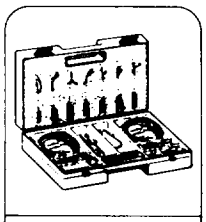

201 589 00 99 00
15 54

Commercially available tools and testers (see Workshop Equipment Manual)

Designation	e.g. Make, order no.
Fuel quantity measuring instrument	Bosch, KDJE–P 300
Tester trolley [1])	Bosch, M 200/2 or KDJE–W 100

[1]) If the tester trolley is used for the fuel quantity measuring instrument, an addition angle plate is required. It can be shop-made or obtained form a Bosch dealership.

Note

The measurement is performed with the engine not running. The operating condition (idle speed, part or full load) is simulated and set at the air flow sensor plate by means of an adjusting device.

Testing

1 Position fuel quantity comparison instrument on level surface next to the vehicle (tool or tester trolley).

2 Take off air cleaner.

3 Unscrew injection lines and fuel distributor and slacken at the injection valves; unscrew if necessary.

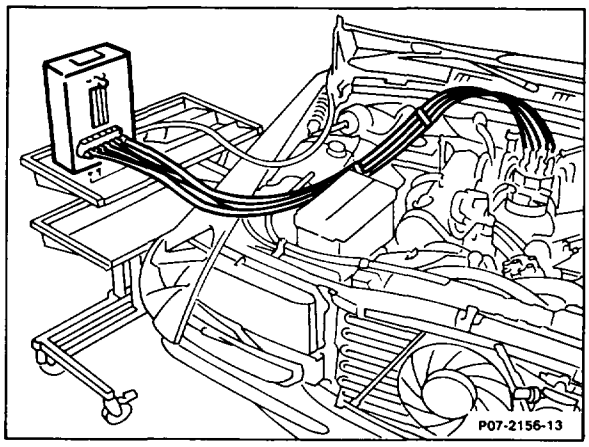

4 Connect lines of fuel quantity measuring instrument to fuel distributor (see Fig for sequence) and place fuel return line into the filler neck of the fuel tank.

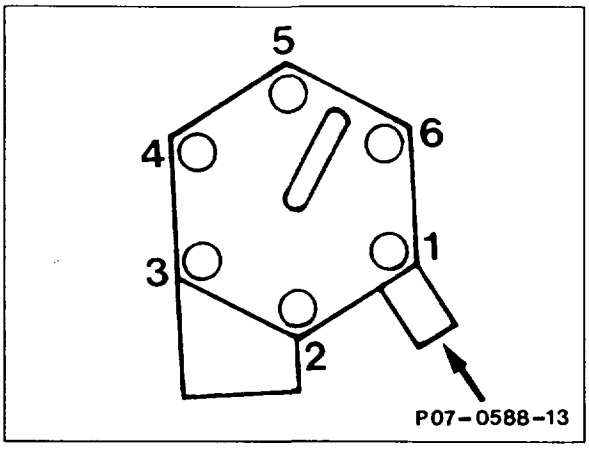

5 Clamp adjusting device for fixing position of air flow senser plate to stop bar of air funnel.

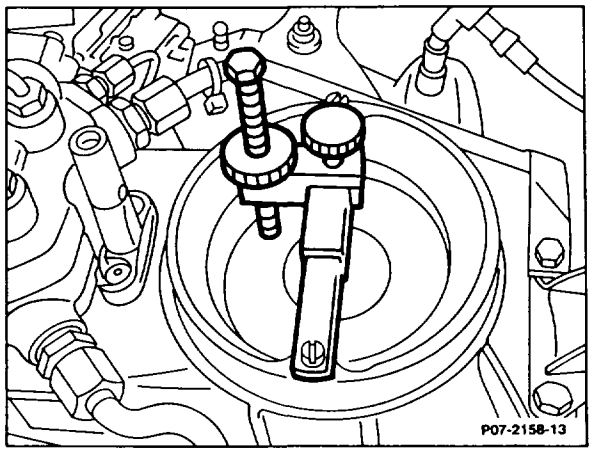

6 Remove fuel pump relays (N16/1 to N16/4).

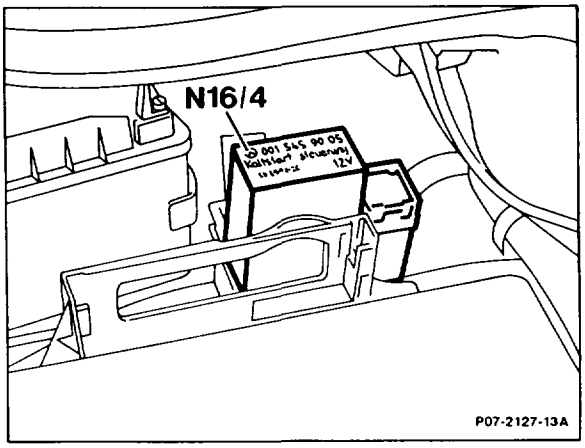

7 Bridge the two contacts 7 and 8, on model 129 engine systems control unit MAS between contacts 1 and 2, for (USA) (J) as of model year 1990 on KE control unit (N3) between contacts 11 and 20. This causes the fuel pump to be energized.

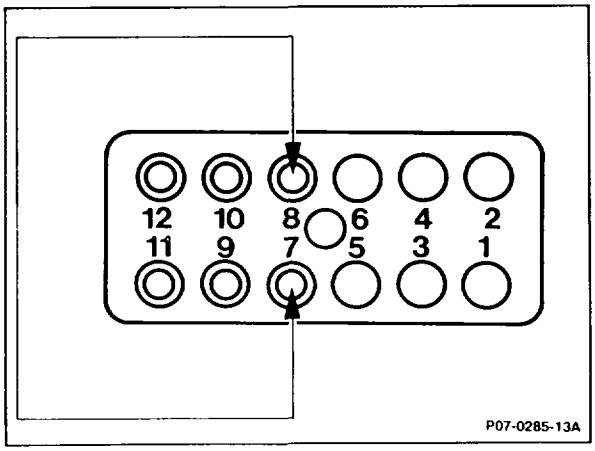

8 Deflect air flow sensor plate and briefly press buttons 1 to 6 individually for venting the equipment.

9 Hold one button pressed, deflect the sensor plate with the adjusting device and fix at a flow quantity of 4 cm^3/min (idle speed).

10 Press the remaining buttons, read off the individual flow quantities and enter on the test sheet.

Maximum spread:
Idle speed 0.4 cm^3/min.

11 Calculate difference between the smallest and the largest flow quantity and compare with the tolerance figure.

12 Fix the air flow sensor plate, as described in step 8, to a flow quantity of 30 cm^3/min and 100 cm^3/min, respectively, for part and full loader. Then, likewise calculate difference between the smallest and the largest flow quantity and compare with the tolerance figure.

Maximum spread:
Part load 4 cm^3/min.
Full load 10 cm^3/min.

If the spread is not to tolerance, replace fuel distributor (07.3–1674).

13 Run engine and check all fuel connections for leaks.

14 Adjust idle speed (07.3–2053 or for (USA) 07.3–5203).

07.3–1660 Replacing seal for control plunger

Preceding work:
Replacing fuel distributor (07.3–1674).

Operation no. of operation texts and work units or standard texts and flat rates:
07–1660.

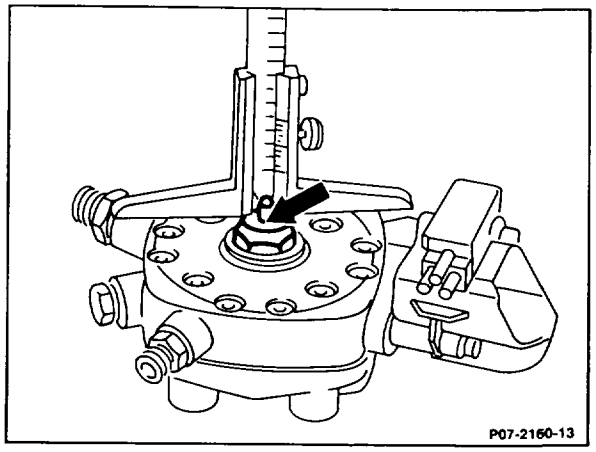

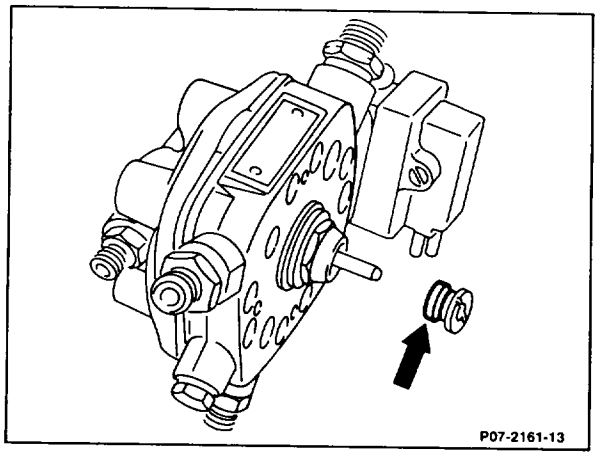

Position (arrow) of screw plug	measure with depth gauge and note. As a precaution, mark position with marking tool.
Screw plug	unscrew with pronged wrench 102 589 00 07 00.
Seal (arrow) of screw plug	replace, ensure seal is correctly seated.
Screw plug	screw in as far as the measure obtained before removing or as far as marking.
	⚠ Failure to observe this instruction will cause the control plunger to adopt an incorrect basic position.
Idle speed	adjust (07.3–2053).

Special tool

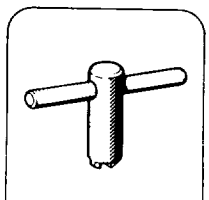

102 589 00 07 00
07

07.3–1665 Replacing, centering air flow sensor plate and checking, adjusting zero position of air flow sensor plate

Operation no. of operation texts and work units or standard texts and flat rates:
07–1665, 07–1612.

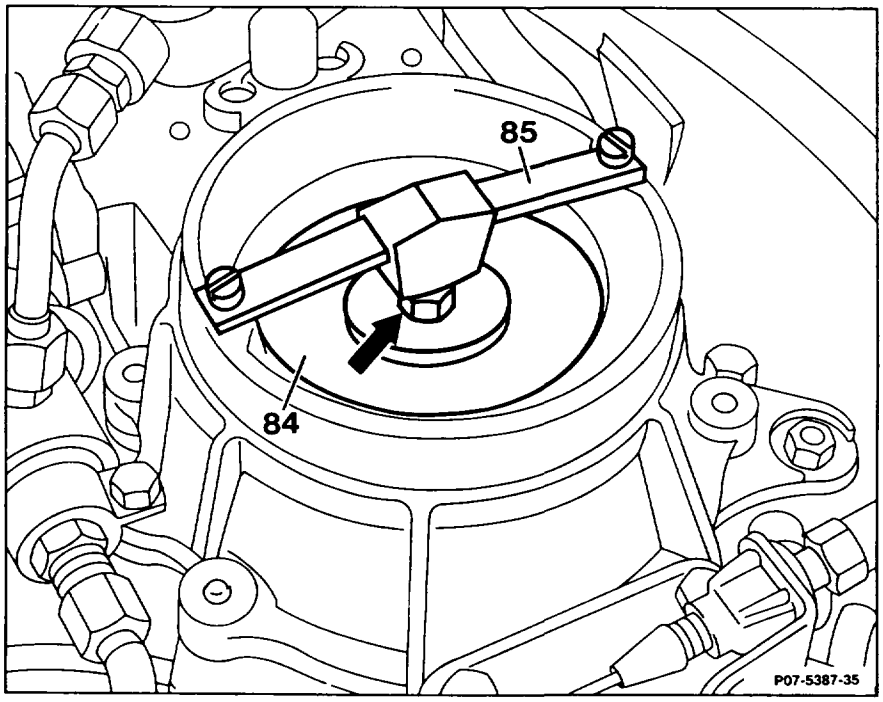

Stop bar (85)	unscrew, screw on.
Micro-encapsulated securing bolt (arrow)	heat with hot air fan.
	⚠ Unscrew carefully (risk of shearing off).
Hole	clean with M6 tap.
Air flow sensor plate (84) and packing washer	insert. Lightly screw on micro-encapsulated securing bolt.
Air flow sensor plate	center (pay attention to installation notes).
Securing bolt	tighten to 5–5.5 Nm.
Air flow sensor plate	check that it operates freely and without sticking. Re-center if necessary.
Idle speed	adjust (07.3–2053).

Special tool

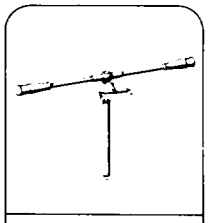

000 589 67 21 00
00

Commercially available tools and testers (see Workshop Equipment Manual)

Designation	e.g. Make, order no.
Hot air fan	
M6 tap	

Installation notes

1 Install parts of repair kit. Insert air flow sensor plate and packing washer. Slightly screw on micro-encapsulated securing bolt (arrow, self-locking).

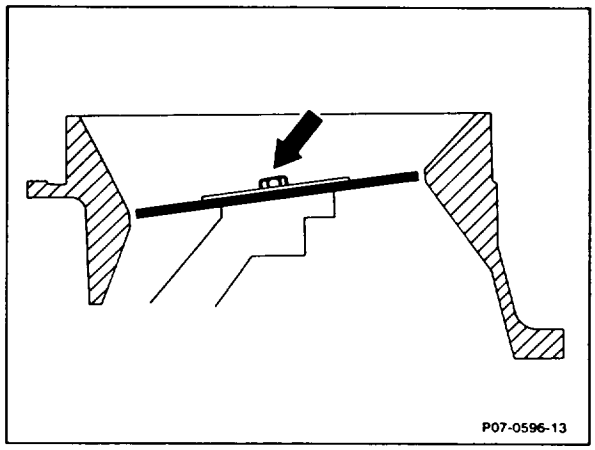

2 Center air flow sensor plate. To do this, remove fuel pump relay and briefly bridge the two contacts 7 and 8, on model 129 engine systems control unit MAS between contacts 1 and 2, for (USA) (J) as of model year 1990 at KE control unit (N3) between sockets 11 and 20 to build up pressure.

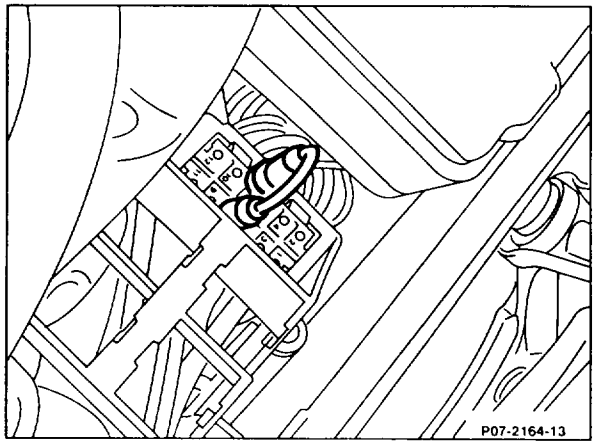

3 Check with a feeler gauge (approx 0.5 mm) that the air flow sensor plate is accurately centered. The air flow sensor plate must also not stick even if slight pressure is applied to the side (bearing play eliminated).
Tighten securing bolt to 5–5.5 Nm and install stop bar.

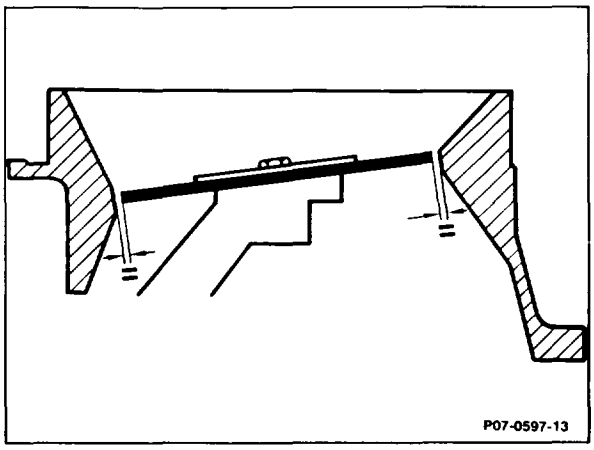

4 Check that air flow sensor plate operates freely. To do this, press sensor plate down by hand. The sensor plate must not jam when this is done. Release sensor plate; as it moves back, the sensor plate must also not jam. It must audibly strike against the resilient stop. Re-center air flow sensor plate if necessary.

5 Check zero position (rest position) of sensor plate. The top edge of the sensor plate must be flush with the top edge of the cylindrical part (arrow) on the air funnel. It is permissible for the plate to be higher by not more than 0.2 mm.

In this position, a play of 1–2 mm must exist when the air flow sensor plate is pressed as far as the control plunger.

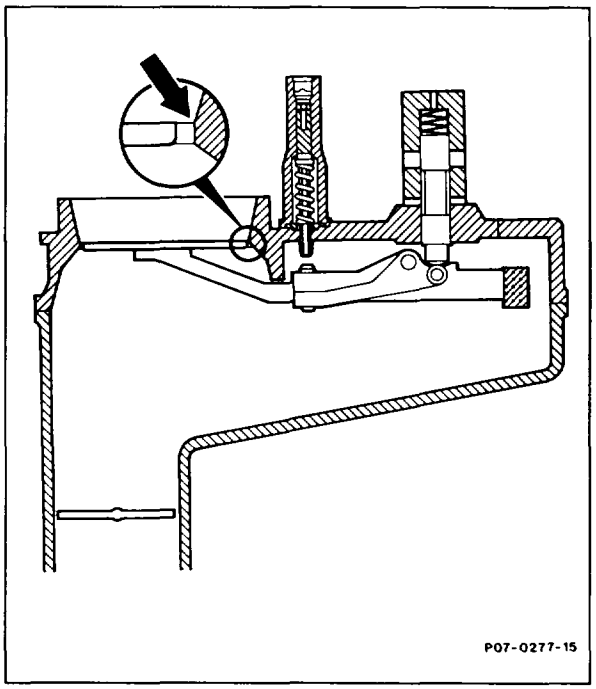

6 Adjust zero position of air flow sensor plate.

a) If the position is too high, knock guide pin (arrow) in appropriately with a drift.

b) If the position is too low, remove mixture control unit and knock guide pin out from below (07.3–1668).

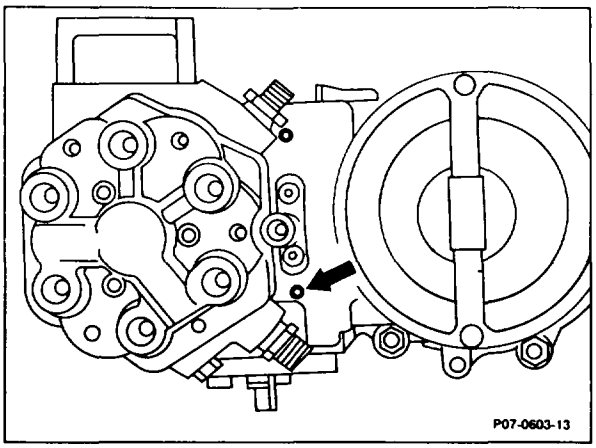

⚠

Do not knock guide pin in too deep. It is essential to avoid moving the guide pin several times in both directions as the interference fit seat of the pin will be insufficient.

7 Install stop bar and fuel pump relay.

8 Adjust idle speed (07.3–2053).

07.3–1668 Removing and installing mixture control unit with air guide housing

Operation no. of operation texts and work units or standard texts and flat rates:
07–1668.

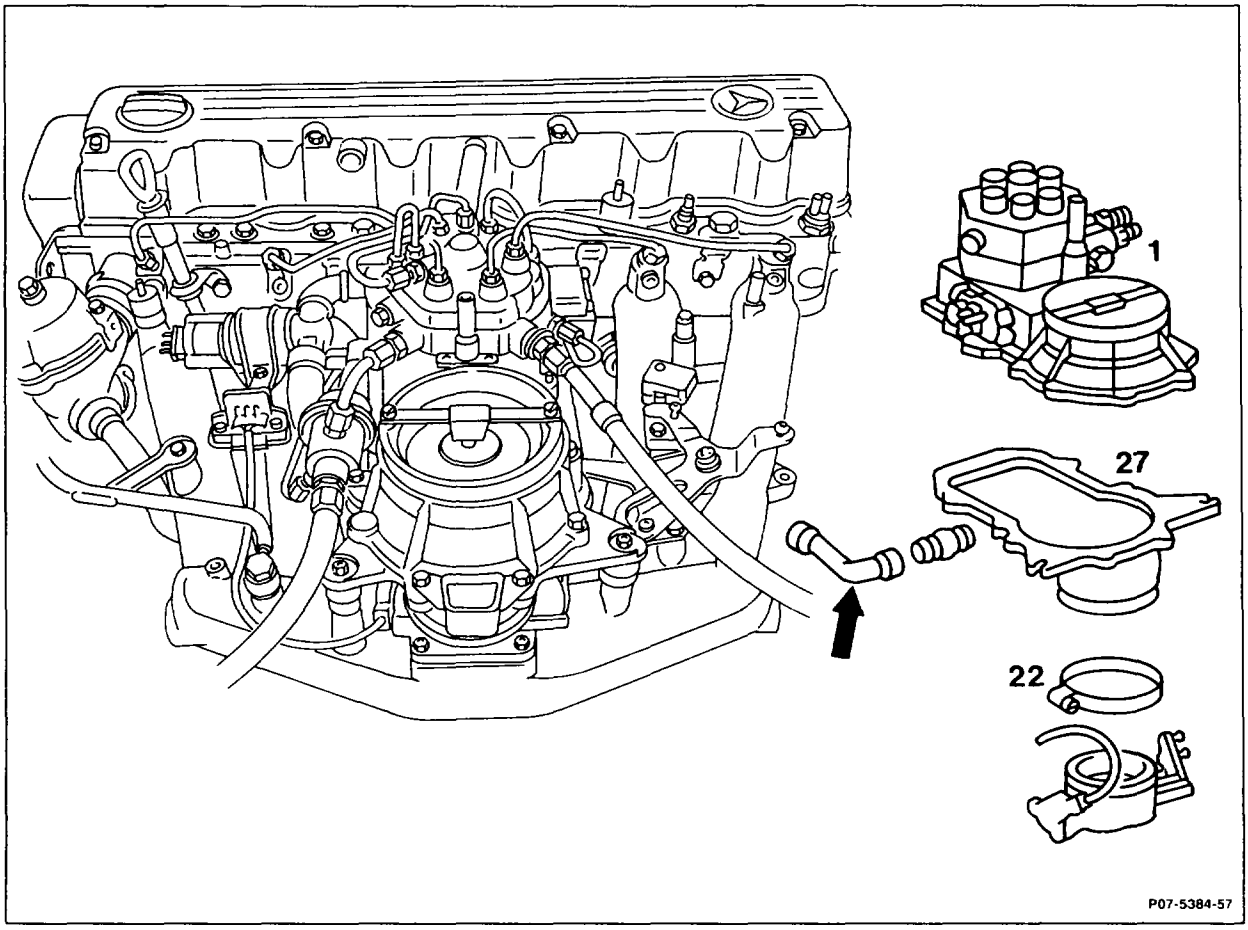

Fuel and injection lines	unscrew, screw on. Tightening torque 10–15 Nm as reference value.
Electric wiring	disconnect, connect.
Diaphragm pressure regulator	unscrew, screw on.
Securing nuts at rubber stop	unscrew, screw on. Tightening torque 9–10 Nm as reference value.
Hose clip (22)	slacken, tighten.

Mixture control unit (1)	raise with air guide housing (27); detach idle air hose (arrow) when doing this.
Engine	run and check all fuel connections for leaks.
Idle speed	adjust (07.3–2053).

Note

Bolts of various lengths are used for attaching the air guide housing to the air flow sensor. For this reason, it is essential when installing to ensure that the bolt removed below the air flow sensor position indicator (arrow) is also re-inserted at that point.
If a longer bolt is used, the air flow sensor position indicator will be damaged.

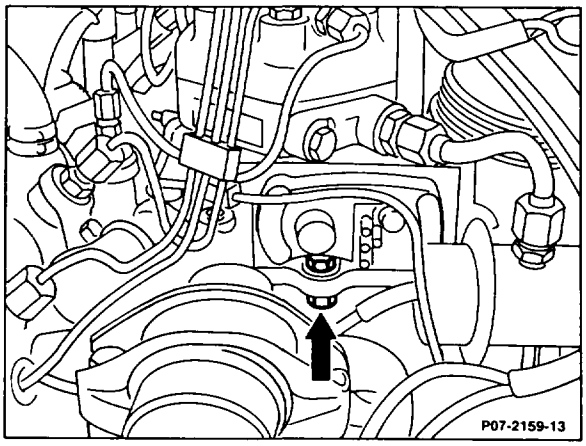

When detaching the fuel line (50) from the fuel distributor to the diaphragm pressure regulator, ensure that the open-end wrench does not press onto the air flow sensor position indicator and damage it.

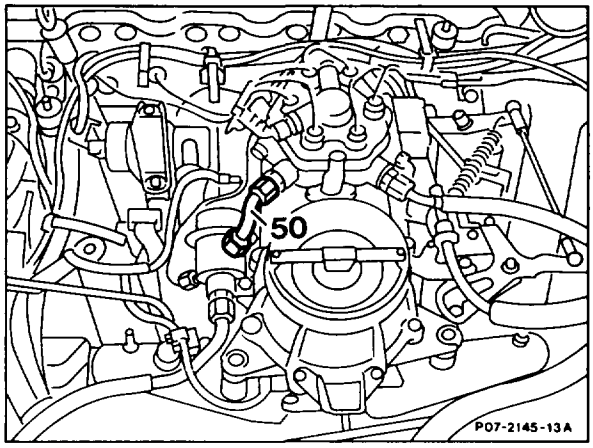

07.3–1674 Replacing fuel distributor

Operation no. of operation texts and work units or standard texts and flat rates:
07–1674.

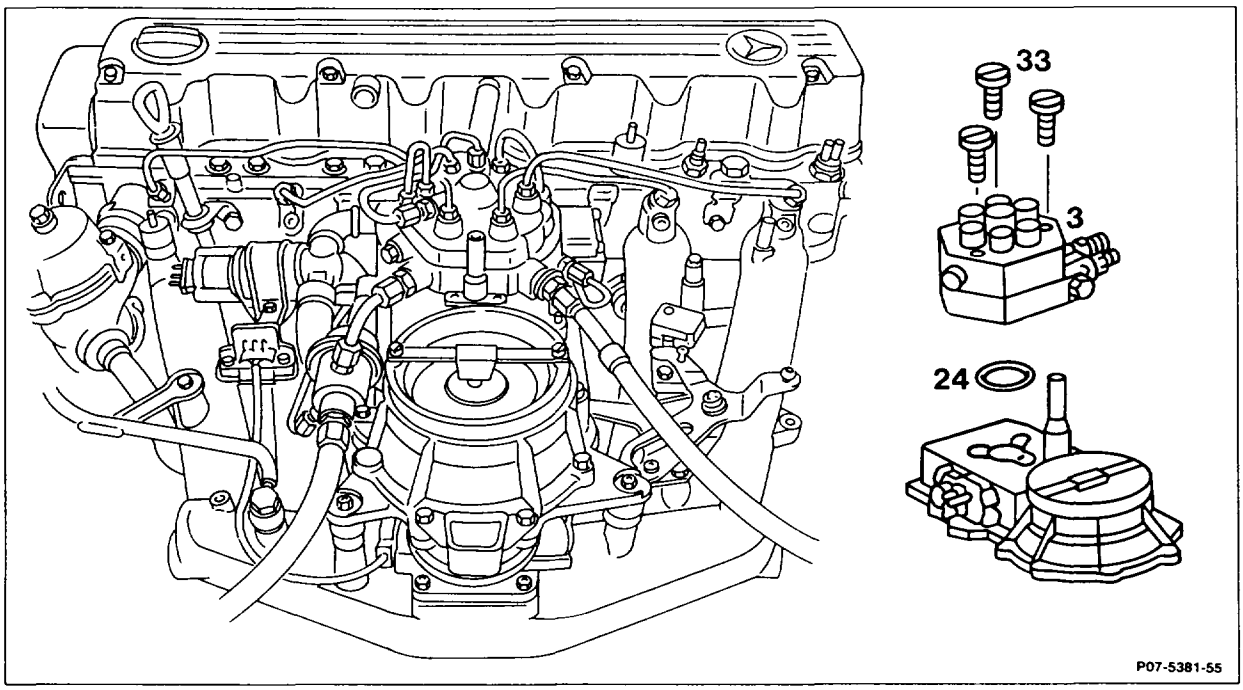

Fuel and injection lines	unscrew, screw on, 10–15 Nm (reference value).
Securing bolts (33)	unscrew, screw in.
Fuel distributor (3)	take off by turning back and forward.
Rubber seal (24)	replace, oil lightly, carefully install fuel distributor.

Matching control plunger to air flow sensor plate	check, adjust if necessary. To do this, remove fuel pump relay and bridge contacts 7 and 8, on model 129 engine systems control unit MAS between contacts 1 and 2, for (USA) (J) as of model year 1990 at KE control unit (N3) between sockets 11 and 20. The fuel must now just stop or start flowing at the intake connection for the injection lines. Adjust matching with the idle speed mixture regulating screw if necessary.
Idle speed	adjust (07.3–2053). Check all fuel connections and also rubber ring at fuel distributor for leaks by spraying.

Note
Screw fitting (arrow) for fuel feed made of modified material.

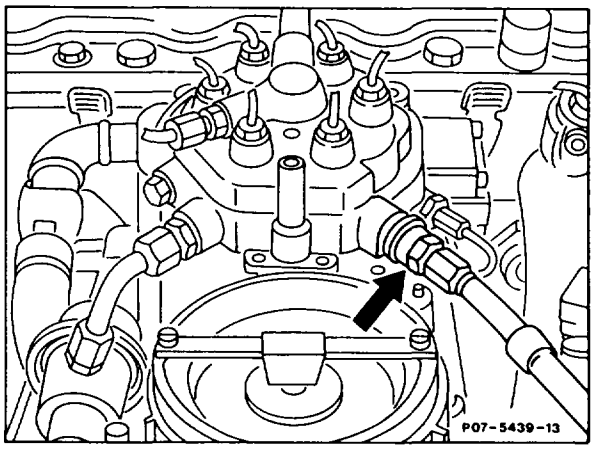

Production breakpoint: 01/90

Model	Engine	Engine end no. manual transmission	Engine end no. automatic transmission
124.007/026	103.940	029603	076606
124.030/050/090	103.983	035039	196437
124.226	103.943	000508	001192
124.230/290	103.985	002404	009684
126.020	103.941	004463	014715
126.024/025	103.981	007781	106771
201.029	103.942	016266	041518

07.3–1686 Replacing air flow sensor

Preceding work:
Removing and installing mixture control unit with air guide housing (07.3–1668).

Operation no. of operation texts and work units or standard texts and flat rates:
07–1686.

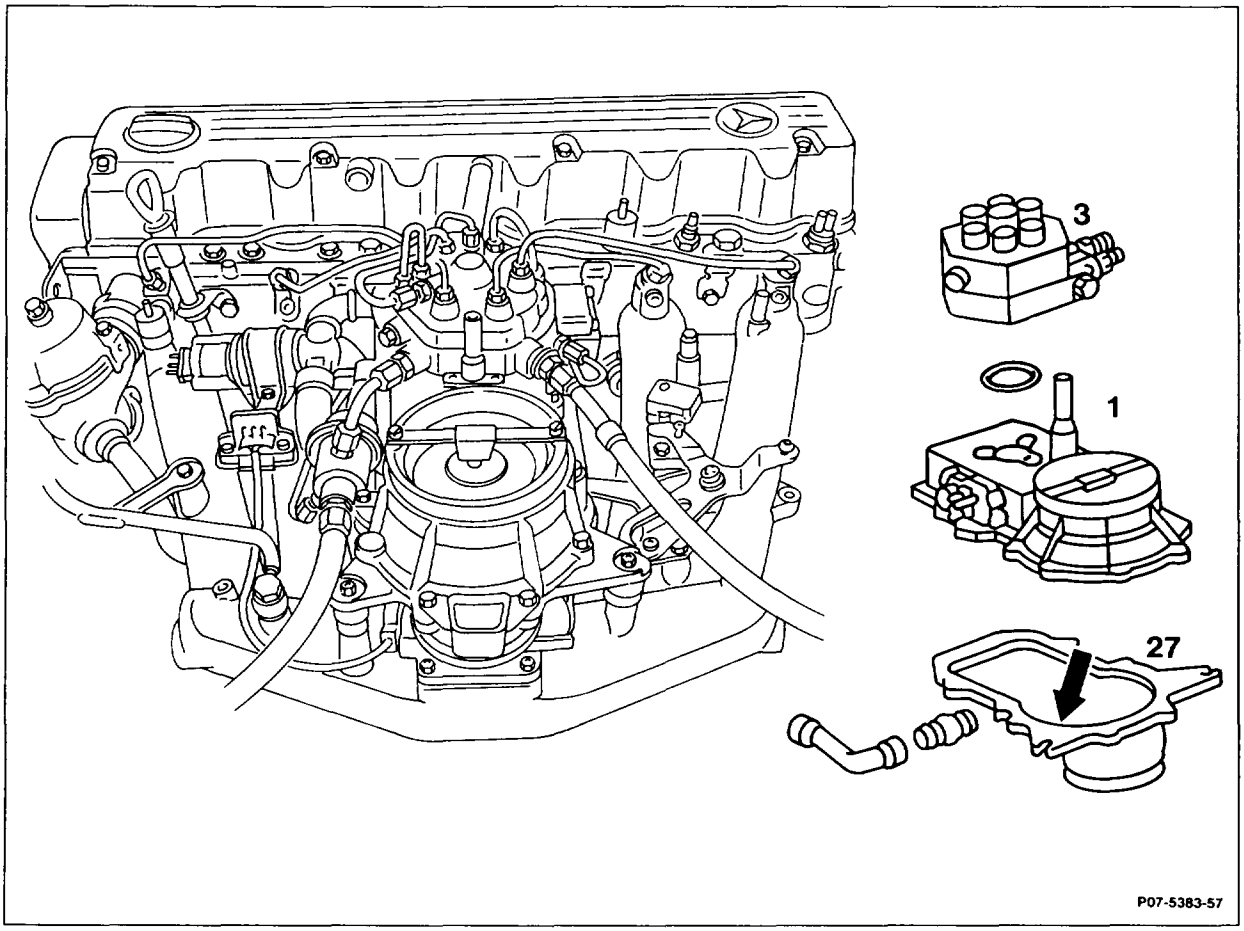

Air guide housing (27) . . . . . unscrew from mixture control unit (1). Replace any damaged parts.
When installing, do not use any sealing compound. Component is sealed by sealing lip (arrow).

Note
The air guide housing is made of rubber. It is fitted into the light alloy frame for securing.

Fuel distributor (3) . . . . . remove, install (07.3–1674).

Note

Bolts of different lengths are used for attaching the air guide housing to the air flow sensor. For this reason, it is essential when installing to ensure that the bolt removed below the air flow sensor position indicator (arrow) is also re-inserted at that point.
If a longer bolt is used, the air flow sensor position indicator will be damaged.

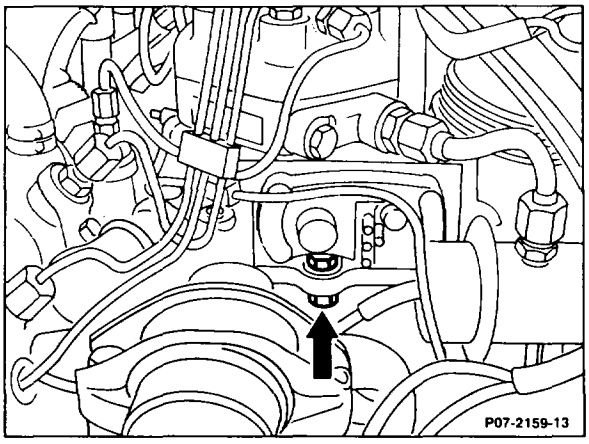

Note

Models 107, 124, 126

Installation security is improved by means of an M 6×22 bolt + washer (arrow).
Previous version: M 6×20 bolt + washer.

Production breakpoint: July 1986

Model	Engine	Engine end no. manual transmission	Engine end no. automatic transmission
107.041	103.982	000665	003298
124.026	103.940	006177	009175
124.030/090	103.983	006856	037949
126.020	103.941	001130	004695
126.024/025	103.981	002496	019170

When detaching the fuel line (50) from fuel distributor to diaphragm pressure regulator, ensure that the open-end wrench does not press on the air flow sensor position indicator and damage it.

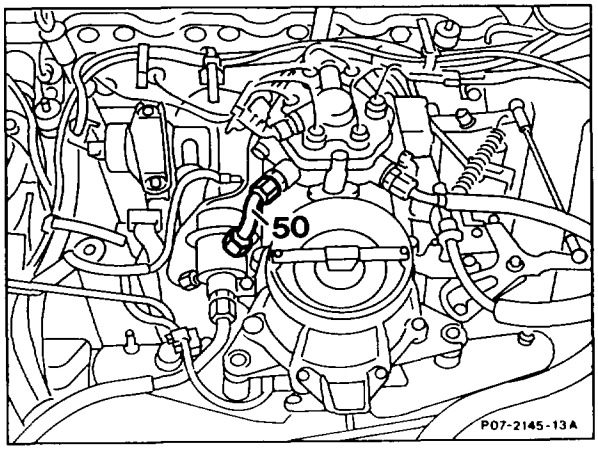

07.3–1689 Replacing, adjusting throttle valve switch

Preceding work:
Removing, installing throttle valve assembly (07.3–6210).

Operation no. of operation texts and work units or standard texts and flat rates:
07–1689.

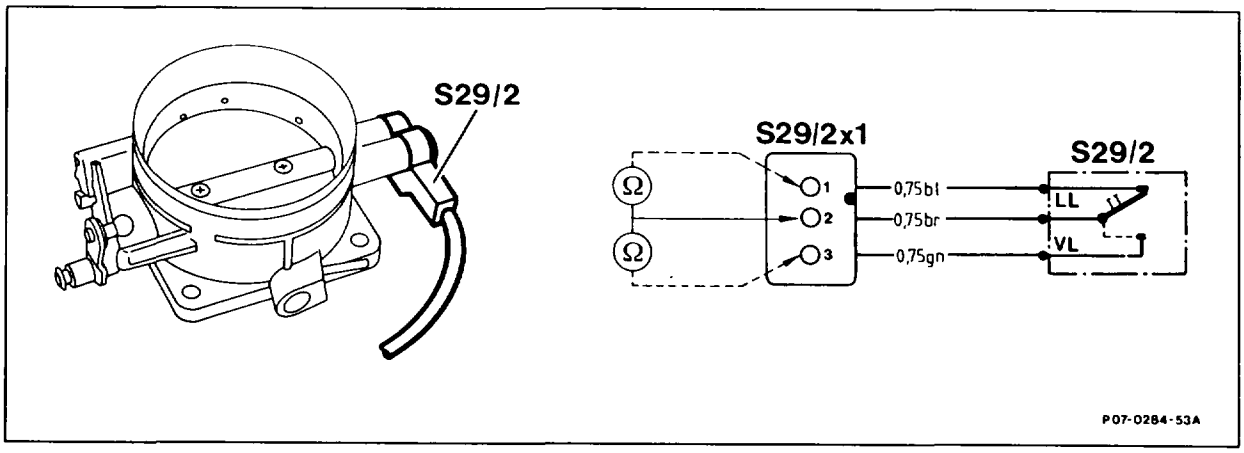

S29/2 Throttle valve switch, full load/idle speed recognition

S29/2x1 Plug connection, throttle valve switch full load/idle speed recognition

Commercially available tools and testers (see Workshop Equipment Manual)

Designation	e.g. Make, order no.
Multimeter	Sun, DMM-5

Symbols for testers

Multimeter
Connector

Symbols for test mode with multimeter

Multimeter
Resistance mode

Test step	Test scope	Test connection	Operation/ Requirement	Specification	Possible cause/Remedy
1.0	Full load stop	S29/2x1 2 — (Ω) — 3	Press throttle valve to full load stop	< 1 Ω	Throttle valve switch (S29/2) faulty, replace
			Turn throttle valve slightly toward idle speed	∞	
			Press throttle valve to idle stop	∞	
2.0	Idle speed stop	S29/2x1 1 — (Ω) — 2	Press throttle valve to idle stop. Turn throttle valve switch (S29/2) sufficiently until specification is achieved.	< 1 Ω	Throttle valve switch (S29/2) faulty, replace
			Raise throttle valve by 0.2 mm	∞	

Turn on ignition for vehicles with ASR.

Note

If throttle valve switch faulty, replace throttle valve body.

07.3–1692 Replacing electrohydraulic actuator

Operation no. of operation texts and work units or standard texts and flat rates:
07–1692.

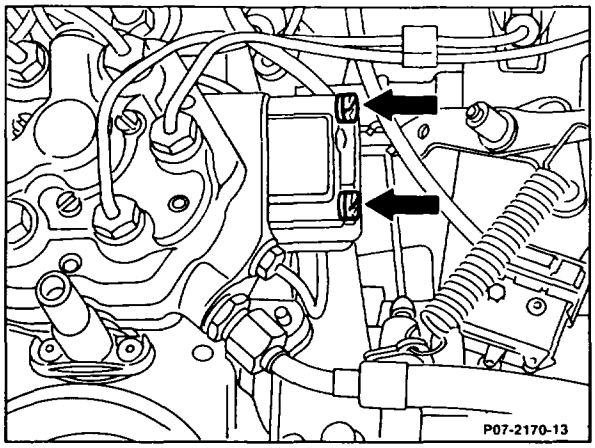

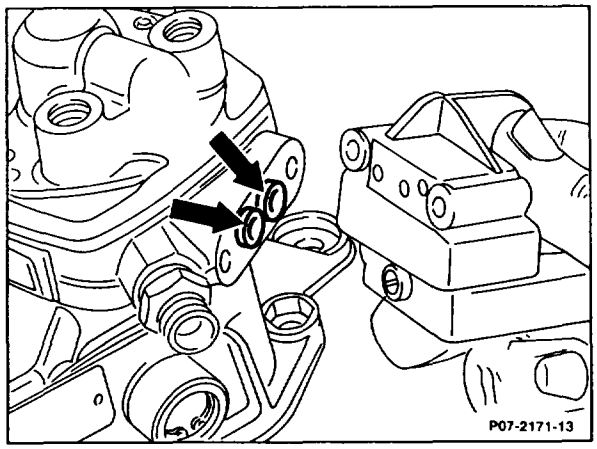

Electrical coupling	disconnect, connect
Fuel pressure	release by detaching fuel line between fuel distributor and start valve. Collect fuel flowing out with a rag.
Securing screws (arrows)	unscrew, screw in. Replace O-rings (arrows). Check that sealing surface is clean, if necessary clean surfaces with white spirit and a non-fluffing cloth. Tighten securing screws to 3.0 + 0.5 Nm.
Leaktightness of O-rings	check. With engine running, no fuel must flow out.
Idle speed	adjust (07.3–2053).

Commercially available tools and testers (see Workshop Equipment Manual)

Designation	e.g. Make, order no.
Screw driver 2115-T27	Hazet, D–5630 Remscheid

07.3–1698 Removing and installing KE control unit

Operation no. of operation texts and work units or standard texts and flat rates:
07–1698.

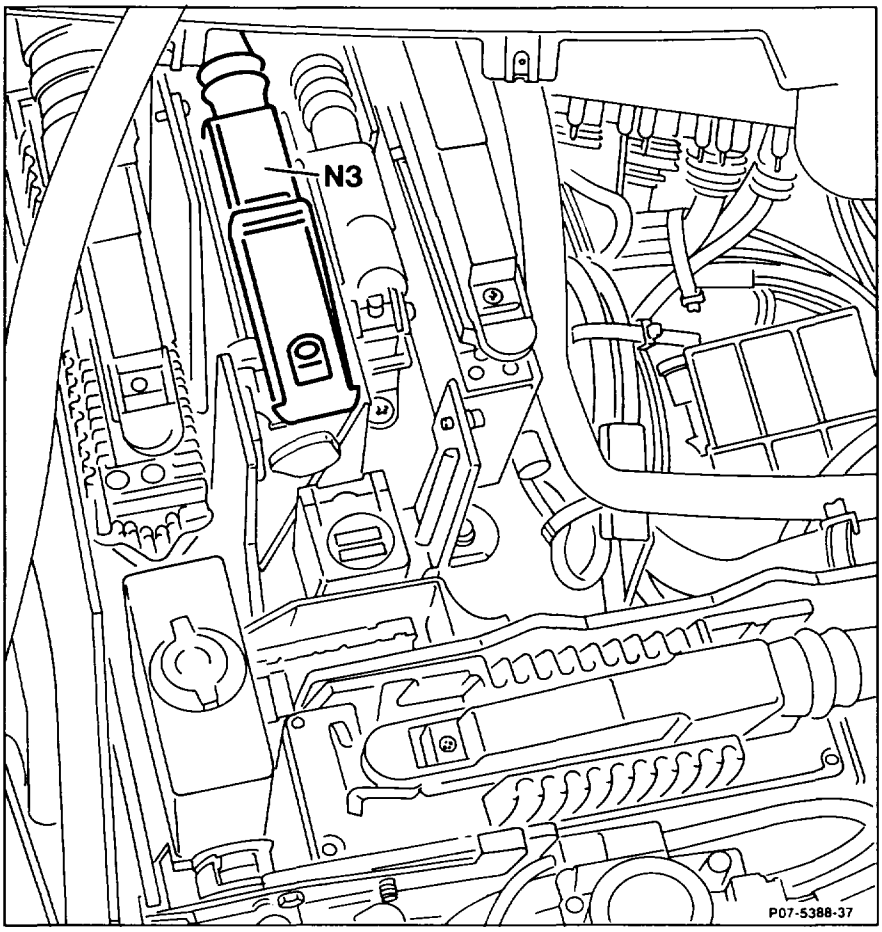

Location of KE control unit (N3), shown on model 129

Battery (66-Ah)	remove, install (only models 124, 201).
Clips (arrow)	push down.
Coupling	at control unit (N3) unplug, plug in.
Control unit (N3)	pull out upward, insert.

Location of KE control unit (N3)

Model 107
At front right below foot rest.

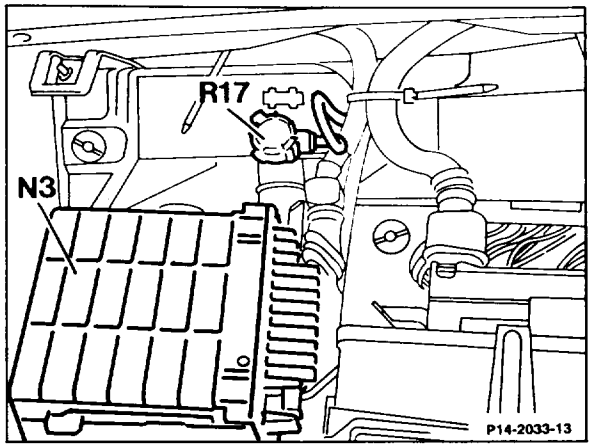

N3 KE control unit
R17 KE resistance trimming plug

Model 124
In right of component compartment.

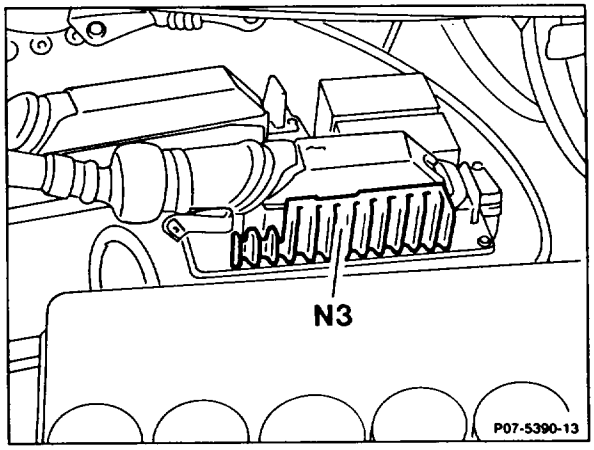

N3 KE control unit

Model 126
In right footwell behind side trim.

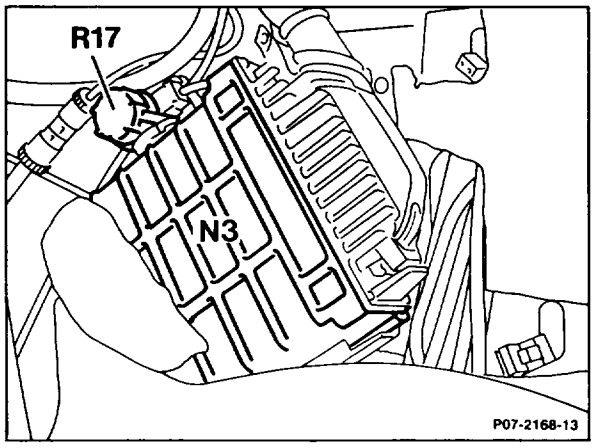

N3 KE control unit
R17 KE resistance trimming plug

Model 201
In right of component compartment.

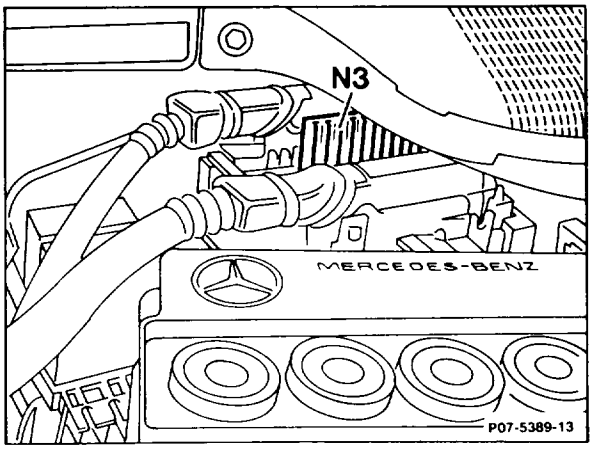

N3 KE control unit

Notes

Models 107, 124, 126, 201

Fault diagnosis by measuring on/off ratio integrated in KE control unit.

As of production date 643.

Model	Engine	Vehicle ident end no.	Production breakpoint
107.041	103.98	A 047309	March 1986
124.030	RÜF/KAT	A 218244	
126.024/025		A 241992	
124.026	103.94	A 267294	June 1986
126.020	RÜF/KAT	A 261125	
124.030	103.98 (AUS) (J) (USA)	A 274928	
126.024/025	103.98 (AUS) (J)	A 265004	
124.030	103.98	A 310551	August 1986
126.024	(CH) (S)	A 277544	

Model 124

At low speeds the idle speed control is set to open-loop mode (constant air throughput) by processing a road speed signal in the KE control unit.

Production breakpoint: July 1987

Model	Engine	Vehicle ident end no. A	Vehicle ident end no. F
124.026	103.940	A 531005	F 048314
124.030/050/090	103.983	A 531005	F 048314
124.226	103.943	A 531005	F 048314
124.230/290	103.985	A 531005	F not recorded

Models 124, 201
Reduction in tendency to jerk by using a road speed signal in the KE control unit.

Production breakpoint: February – April 1988

Model	Engine	Month/Year	Vehicle ident end no. A	Vehicle ident end no. F
124.026	103.940	02/88	679738	–
124.030	103.983	04/88	748192	–
124.050	103.983	03/88	731319	–
124.090	103.983	02/88	–	065507
201.029	103.942	02/88	433668	478353

Models 124, 126, 201 (USA) California
Software modification in program part of Carb-Diagnosis (fault memory).

Production breakpoint

Model	Engine	Month/Year	Vehicle ident end no. A	Vehicle ident end no. F
124.026	103.940	07/88	800313	–
124.030	103.983	07/88	799937	–
124.050	103.983	07/88	799086	–
124.090	103.983	06/88	–	080714
126.024/025	103.981	07/88	423884	–
201.029	103.942	06/88	–	519132

Models 124, 126, 201

Harmonization of secondary air pump and exhaust gas recirculation modified.

Production breakpoint: August 1990

Model	Engine	Vehicle ident end no.	Basic version	National version (USA)	(AUS)	(J)
124.026	103.940	B 327450	x	x	–	–
124.030	103.983	B 327450	x	x	–	–
124.090	103.983	F 156242	x	–	–	–
	103.983	F 159013	–	x	–	–
124.230	103.985	B 327450	x	x	–	–
124.290	103.985	F 156242	x	–	–	–
	103.985	F 159013	–	x	–	–
126.024/025	103.981	A 567666	x	x	–	–
201.029	103.942	F 762912	x	x	–	–

Models 124, 126 (USA)

KE 5 control unit: software modification; thus, no further fault display when driving at high altitudes.

Production breakpoint

Model	Month/Year	Vehicle ident end no.
124	11/89	B 140137
124	02/90	F 139401
126	11/89	A 519941
201 (USA) Federal	02/90	F 711874
201 (USA) California	02/90	F 713257

Models 124, 126, 201 (USA)

Software modification, fault code 3 discontinued.

Production breakpoint: 07/90

Model	Engine	Vehicle ident end no.
124.026	103.940	B 312083
124.030	103.983	B 312083
124.230	103.985	B 312083
126.024/025	103.981	A 564914
201.029	103.942	F 759713

07.3–2006 Testing electronic idle speed control

Preceding work:
Testing, adjusting engine (07.3–1100).

Operation no. of operation texts and work units or standard texts and flat rates:
07–2006.

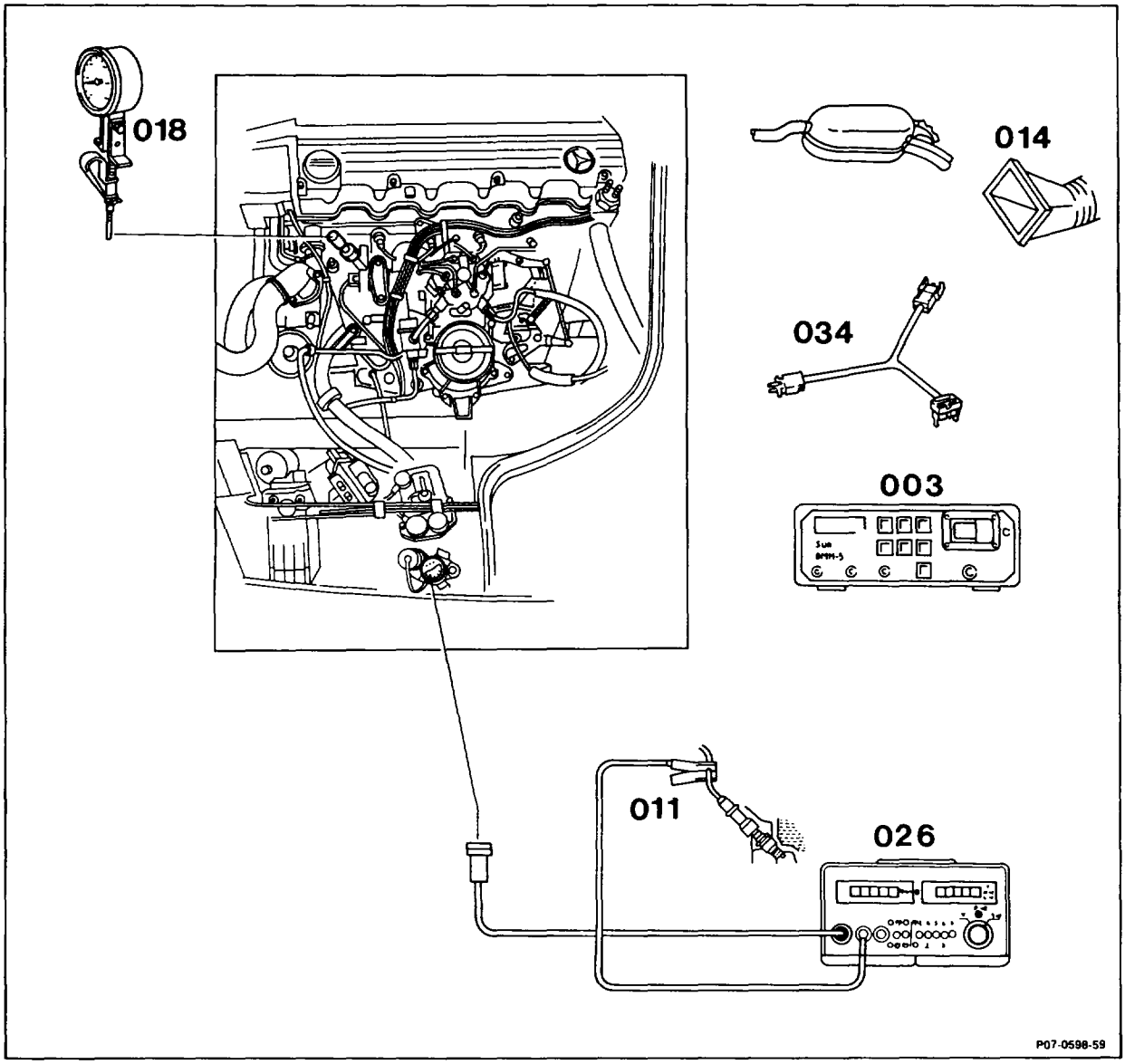

Testers	connect: oil remote thermometer (018) 124 589 07 21 00, trigger clamp (011), engine tester (026), multimeter (003), test cable (034) 102 589 04 63 00.
Extraction device (014)	position at exhaust tailpipe.

Engine oil temperature	approx. 80 °C.
Electronic idle speed control	test (see table).
Control range	test (see table).
Function of idle speed air valve	test. Briefly apply battery voltage for this step; valve must be heard to operate.
Voltage supply	test according to wiring diagram.
Smooth engine running	check. Switch on all ancillaries for this step.

Test and adjustment data

Basic version

Engine	Version	Idle speed	
		1/min	Control range
103.940/941/942/943	RÜF NV (RÜF)	650–750	35–45% 21–27° ∡
	KAT		
103.980	Std.	600–700	
	Std. KAT		
103.981	RÜF NV (RÜF)		
	KAT		
103.982/983/985	RÜF NV (RÜF)	up to 5/90: 600–700 as of 6/90: 650–750	
	KAT		
103.984	RÜF	650–750	
	KAT		

National version (AUS) (CH) (J) (S) (USA)

Engine	Version	Idle speed	
		1/min	Control range
103.94	(AUS)	700 ± 50	35–45% 21–27° ∡
103.98		650 ± 50	
103.94	(CH) KAT (S) KAT	700 ± 50	
103.98 except 103.984	(CH) (S)	780 ± 50	
	(CH) KAT (S) KAT	650 ± 50; as of 06/90 750 ± 50	
103.984	(CH) KAT (S) KAT	700 ± 50	
103.94	(J)	700 ± 50	35–45%
103.98		650 ± 50	
103.94	(USA)	700 ± 50	
103.98		650 ± 50; as of model year 1990 700 ± 50	

Special tools

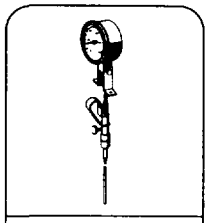

124 589 07 21 00
18

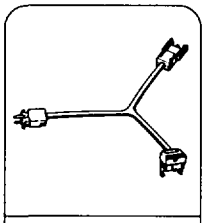

102 589 04 63 00
07

201 589 00 99 00
15 54

Commercially available testers (see Workshop Equipment Manual)

Designation	e.g. Make, order no.
Multimeter	Sun, DMM-5
Engine tester	Bosch, MOT 002.02

Symbols for testers

Multimeter
Contact
Connector
Ground

Symbols for test mode with multimeter

Voltage measurement (volts, DC voltage)
Current measurement (amperes, DC)
Resistance measurement (ohms)

Test conditions

- Engine oil temperature approx. 80°C
- Battery voltage 11–14 V

Note

See appropriate wiring diagram volume for wiring diagrams.
The voltage on analog instruments may drop to 0 volts. Engine speed increases when the coupling is unplugged from the microswitch.

Test step	Test scope	Test connection	Operation/ Requirement	Specification	Possible cause/Remedy
1.0 [1]	Test idle speed air valve (Y6)	Test cable (034) to idle speed air valve (Y6) 1 — ⊖Ⓐ⊕ — 2	Engine: **idling**	650 ± 50 mA	Open circuit in wiring KE control unit (N3)
2.0 [1]	Test idle speed air valve (Y6)	Connect engine tester (026) to diagnostic socket (X11)	Engine: **idling**	21–27° ∡ or 35–45 %	Idle speed air valve faulty, Open circuit in wiring
3.0		Briefly apply battery voltage and ground to idle speed air valve	Engine: **idling** Coupling at idle speed air valve (Y6) unplugged	Idle speed air valve can be heard to operate	Replace idle speed air valve
4.0		Y6 ⊥ — ⊖Ⓥ⊕ — 1	Ignition: **ON**	11–14 V	Open circuit in wiring
5.0	Resistance at idle speed air valve	Y6 1 — ⊖Ω⊕ — 2	Ignition: **OFF** Coupling at idle speed air valve (Y6) unplugged	7.5–10 Ω	Idle speed air valve (Y6)

[1]) Test step 1.0 for all models as of model year 1990, test step 2.0 for all models up to model year 1989.

07.3–2053 Testing, adjusting idle speed or special exhaust emissions test (ASU)

Operation no. of operation texts and work units or standard texts and flat rates:
07–2053,
Special exhaust emissions test (ASU): 00–7600.

A. Basic and national versions

(USA see 07.3–5203)

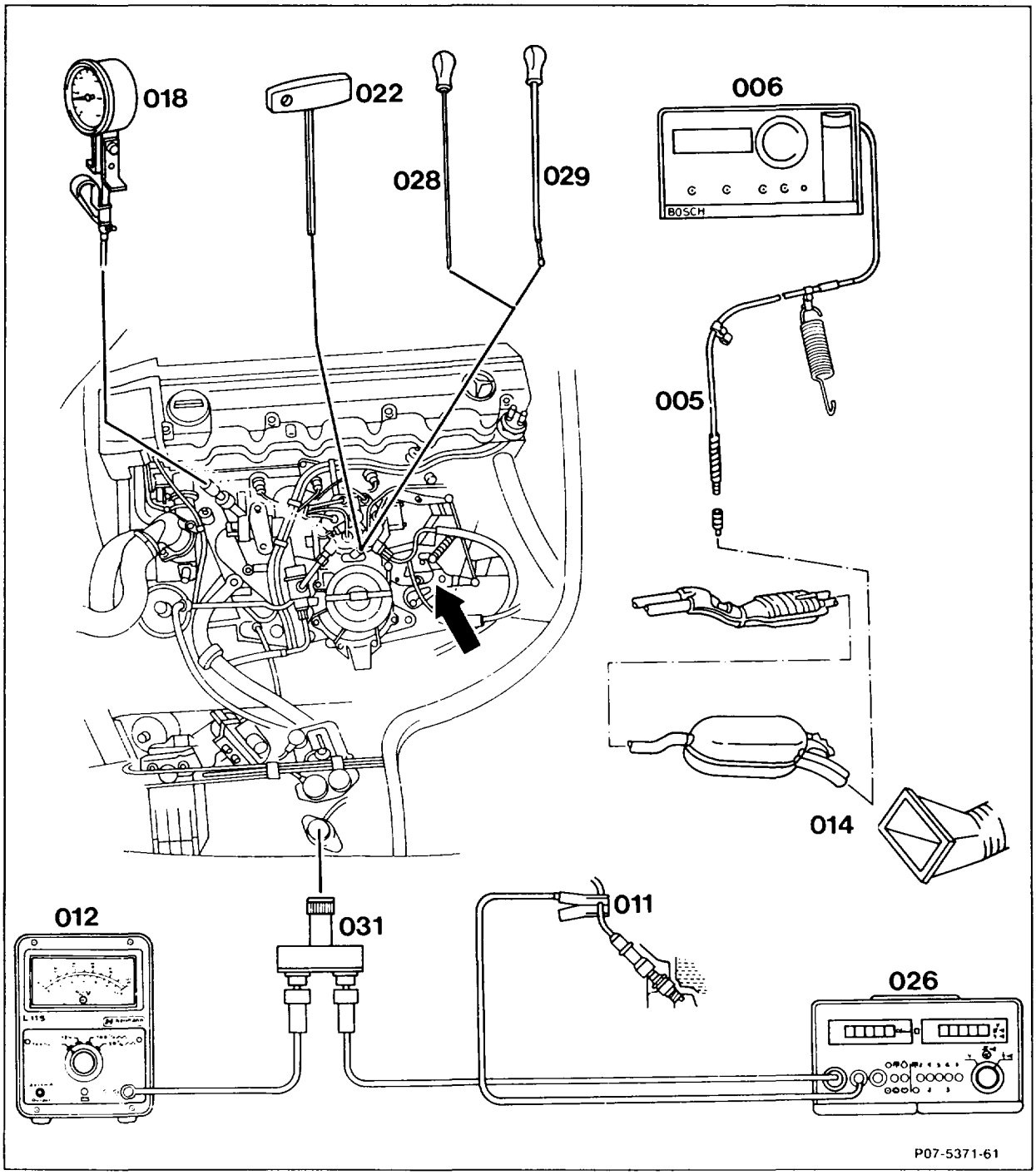

Air conditioner or automatic climate control	switch off.
Selector lever	move into position "D."
Testers	connect: oil remote thermometer (018) 124 589 07 21 00, lambda control tester (012), twin socket (031), exhaust probe (005) 126 589 11 63 00, CO analyzer (006), engine tester (026), trigger clamp (011).
Extraction device (014)	position at exhaust tailpipe.
Accelerator control (arrow)	check for ease of movement and condition.
Ignition timing	test (see table).
Engine oil temperature	approx. 80°C.
Idle speed	test (see table).
Idle emissions level, lambda control	test, adjust (see table). Use special tools, screwdriver (022) 000 589 14 11 00, puller (028) 123 589 05 33 00 and insertion drift (029) 123 589 00 15 00, for adjusting.
Smooth engine running	check. Switch on all ancillaries for this step.

Basic version

Engine	Version	Idle speed		Idle emissions level	Lambda control
		1/min	Control range	% CO	Control range %
103.940 103.941 103.942 103.943	RÜF NV (RÜF)	650–750	35–45% 21–27° ∡	1 ± 0.5	–
	KAT			≤ 0.5 [2])	[1])
103.980	Std.	600–700		1 ± 0.5	–
	Std. KAT			1 ± 0.5 < 1.5 [2])	
103.981	RÜF NV (RÜF)			1 ± 0.5	
	KAT			≤ 0.5 [2])	[1])
103.982 103.983 103.985	RÜF NV (RÜF)	up to 5/90: 600–700 as of 6/90: 650–750		1 ± 0.5	–
	KAT			≤ 0.5 [2])	[1])
103.984	RÜF	650–750		1 ± 0.5	–
	KAT			≤ 0.5 [2])	[1])

[1]) Test lambda control at 2500/min and read off average value. Detach regeneration line at regeneration valve for this step and close. Compare this reading with the idle speed reading. The average value at idle speed must not differ by more than ± 10 from the reading obtained at 2500/min.

[2]) When performing special exhaust emissions test (ASU).

National version (AUS) 1986–1991 silver identification plate

Engine	Version	Idle speed		Idle emissions level	Lambda control
		1/min	Control range	% CO	Control range %
103.94	(AUS)	700 ± 50	35–45% 21–27° ∡	–	[1])
103.98		650 ± 50			

[1]) Test lambda control at 2500/min and read off average value. Detach regeneration line at regeneration valve for this step and close. Compare this reading with the idle speed reading. The average value at idle speed must not differ by more than ± 10 from the reading obtained at 2500/min.

National version

- (CH) **up to 1986** information plate green
- (CH) **1986, 1987** information plate green
- (CH) **KAT 1986, 1987** information plate light green
- (CH) **KAT as of 1988** no information plate, instead engine data setting plate
- (S) **1986, 1987** information plate blue
- (S) **KAT ab 1986** information plate light blue

Engine	Version	Idle speed		Idle emissions level	Lambda control
		1/min	Control range	% CO	Control range %
103.94	(CH) KAT (S) KAT	700 ± 50	35–45% 21–27° ∡	≤ 0.5	[1]
103.98 except 103.984	(CH) (S)	780 ± 50		0.6 ± 0.3	–
	(CH) KAT (S) KAT	650 ± 50; as of 06/90 750 ± 50		≤ 0.5	[1]
103.984	(CH) KAT (S) KAT	700 ± 50			

[1] Test lambda control at 2500/min and read off average value. Detach regeneration line at regeneration valve for this step and close. Compare this reading with the idle speed reading. The average value at idle speed must not differ by more than ± 10 from the reading obtained at 2500/min.

National version (J) 1986–1990 information plate in Japanese

Engine	Version	Idle speed		Idle emissions level	Lambda control
		1/min	Control range	% CO	Control range %
103.94	(J)	700 ± 50	35–45%	–	[1]
103.98		650 ± 50			

[1] Test lambda control at 2500/min and read off average value. Detach regeneration line at regeneration valve for this step and close. Compare this reading with the idle speed reading. The average value at idle speed must not differ by more than ± 10 from the reading obtained at 2500/min.

EZL ignition timing point

Engine	EZL ignition control unit	Engine speed 1/min	Ignition timing point in ° CA before TDC		
			Resistance trimming plug position or fuel type	Without vacuum	With vacuum
Basic version KAT/RÜF and (CH) (S) KAT					
103.940 103.941 103.942 103.943	003 545 95 32 003 545 96 32 005 545 84 32 005 545 86 32 006 545 73 32 006 545 75 32 008 545 61 32 008 545 63 32 011 545 88 32 011 545 89 32	3200	S	25–29	40–44
			N	19–23	
			S and N	7–11	7–11
103.980	003 545 14 32 003 545 15 32	3200	1/ Premium leaded	23–27	39–43
		Idle speed		8–13	8–13
		3200	3/ Premium unleaded	19–23	39–43
		Idle speed		8–13	8–13
103.981 103.983 103.985	004 545 44 32 004 545 46 32 005 545 85 32 005 545 87 32 006 545 74 32 006 545 76 32 007 545 86 32 007 545 87 32 008 545 62 32 008 545 64 32	3200	S	27–31	40–44
			N	21–25	40–44
		Idle speed	S and N	6–11	6–11
103.982	004 545 44 32 004 545 46 32 005 545 85 32 005 545 87 32 006 545 74 32 006 545 76 32				
103.984	007 545 86 32 007 545 87 32				
National version (CH) 1986, (S) 1986 [1])					
103.981 103.983	004 545 69 32 005 545 49 32 005 545 88 32	3200	S	29–33	40–44
			N	23–27	
		Idle speed	S and N	OT ±2	OT ±2

[1]) For (CH) KAT, (S) KAT, same values as basic version KAT.

EZL ignition timing point

Engine	EZL ignition control unit	Engine speed 1/min	Ignition timing point in ° CA before TDC		
			Resistance trimming plug position or fuel type	Without vacuum	With vacuum
National version (AUS)					
103.940 103.942	005 545 84 32 005 545 86 32 006 545 73 32 006 545 75 32 008 545 61 32 008 545 63 32	3200	Reference resistor 220 Ω	19–23	40–44
		Idle speed		7–11	7–11
103.981 103.983	004 545 44 32 004 545 46 32 005 545 85 32 005 545 87 32 006 545 74 32 006 545 76 32 008 545 62 32 008 545 64 32	3200	Reference resistor 220 Ω	21–25	40–44
		Idle speed		6–11	6–11
National version (J)					
103.940 103.942	005 545 84 32 005 545 86 32 006 545 73 32 006 545 75 32 008 545 61 32 008 545 63 32	3200	Reference resistor 750 Ω	25–29	40–44
		Idle speed		7–11	7–11
103.981 103.983 103.985	004 545 44 32 004 545 46 32 005 545 85 32 005 545 87 32 006 545 74 32 006 545 76 32 008 545 62 32 008 545 64 32	3200	Reference resistor 750 Ω	27–31	40–44
		Idle speed		6–11	6–11

Special tools

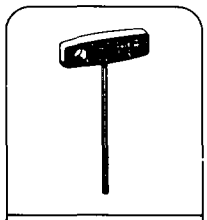

000 589 14 11 00
07

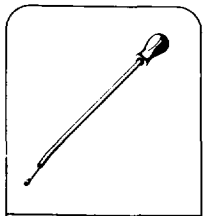

123 589 00 15 00
07

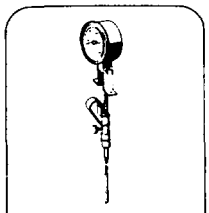

124 589 07 21 00
18

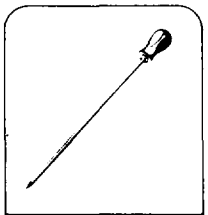

123 589 05 33 00
07

Commercially available tools and testers (see Workshop Equipment Manual)

Designation	e.g. Make, order no.
Twin socket	Hermann, ECD 53
Engine tester (engine speed, dwell angle, ignition angle)	Bosch, MOT 001.03
Lambda control tester	Hermann, L 115
CO analyzer	

Test and adjust lambda control with a lambda control tester. If no lambda control tester is available, a dwell angle tester can be used.
Idle speed must not be set when the engine is too hot, e.g. immediately after driving sharply or after measuring engine output on the dynamometer.

Testing, adjusting

1 Switch off air conditioner or automatic climate control. Move selector lever into position "P."

2 Connect testers:
oil remote thermometer (018) 124 589 07 21 00,
lambda control tester (012),
twin socket (031),
engine tester (026),
trigger clamp (011),
exhaust probe (005) 126 589 11 63 00,
CO analyzer (006).

3 Position extraction device (014) at exhaust tailpipe.

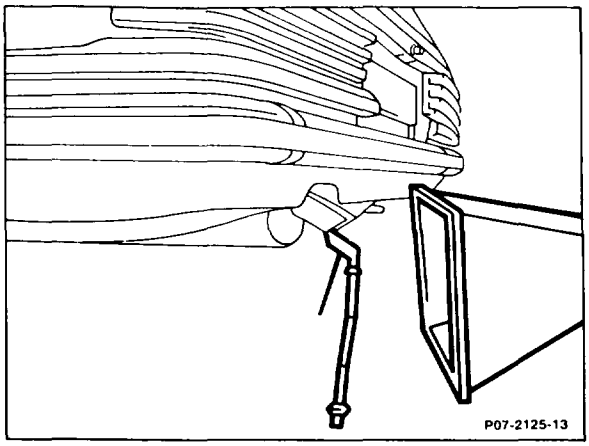

4 Check ease of movement and condition of accelerator control.

5 Test ignition timing (see table).

6 Run engine until oil temperature is about 80°C.

7 Test idle speed (see table).

Note
On engine with electronic idle speed control, idle speed can no longer be adjusted. If idle speed differs, perform test program (07.3–2006).

8 Test idle speed emissions level (see table); adjust if necessary (see step 10).

Note
The measuring point for the open-loop catalytic converter is located upstream of the catalytic converter (arrow).

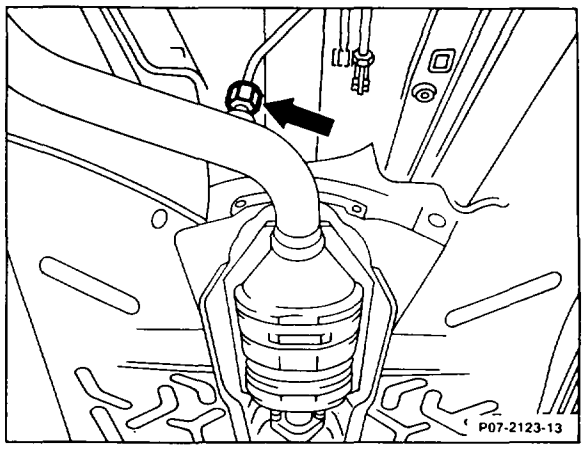

9 Test lambda control.

Note
The readout must fluctuate during the measurement. If a constant readout is displayed, there is a fault in the lambda control, e.g. oxygen sensor disconnected.
See "Testing electrical components of KE injection system" (07.3–0121) for troubleshooting schedule.

Detach regeneration line to throttle valve assembly at regeneration valve (78) and seal. Connect tester to diagnostic socket. Press 100% button (M). Test on/off ratio at 2500/min and read off average value. Compare this reading with the idle speed value. The average value at idle speed must not differ by more than ± 10 from the reading obtained at 2500/min.
Adjust lambda control (see step 10).

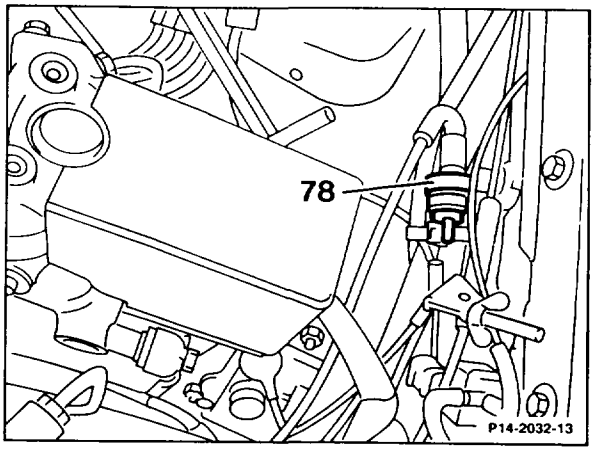

10 Adjust idle speed emissions level or lambda control. To do this, remove anti-tamper plug (44) with the puller. Press on the adjusting device (42) with a screwdriver (arrow) inserted through the recess on the top of the air cleaner. Press the adjusting device down with the screwdriver against the spring force, turn slightly until the hexagon head (43) engages in the mixture regulatig screw (61):
Turning to left = leaner – on/off ratio rises.
Turning to right = richer – on/off ratio drops.

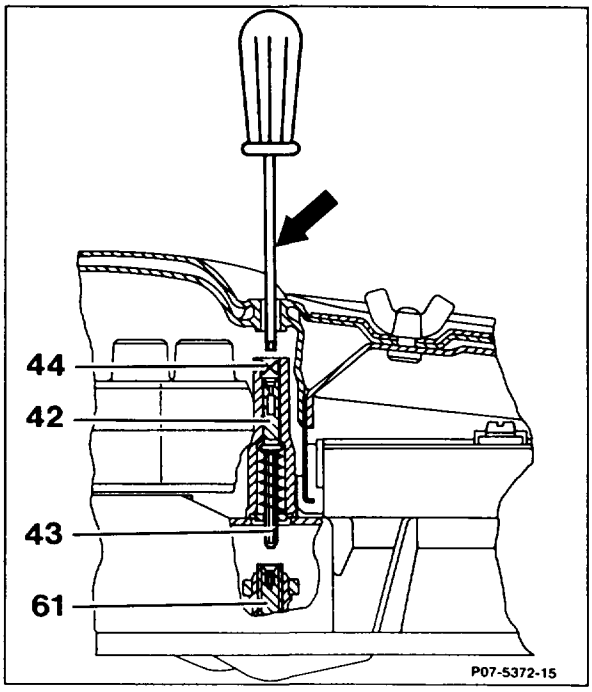

Briefly accelerate and test idle speed emissions level or lambda control; adjust if necessary. After adjusting, insert a blue anti-tamper plug (44), part no. 000 997 59 86, with the insertion drift.

11 Re-connect regeneration line (only if lambda control fitted).

12 Check smooth engine running by engaging selector lever in Drive mode, switching on air conditioner/automatic climate control, turning power steering to full lock. The engine must continue to run smoothly.

07.3–2320 Performing cold start

Preceding work:
Testing, adjusting engine (07.3–1100).

Operation no. of operation texts and work units or standard texts and flat rates:
07–2320.

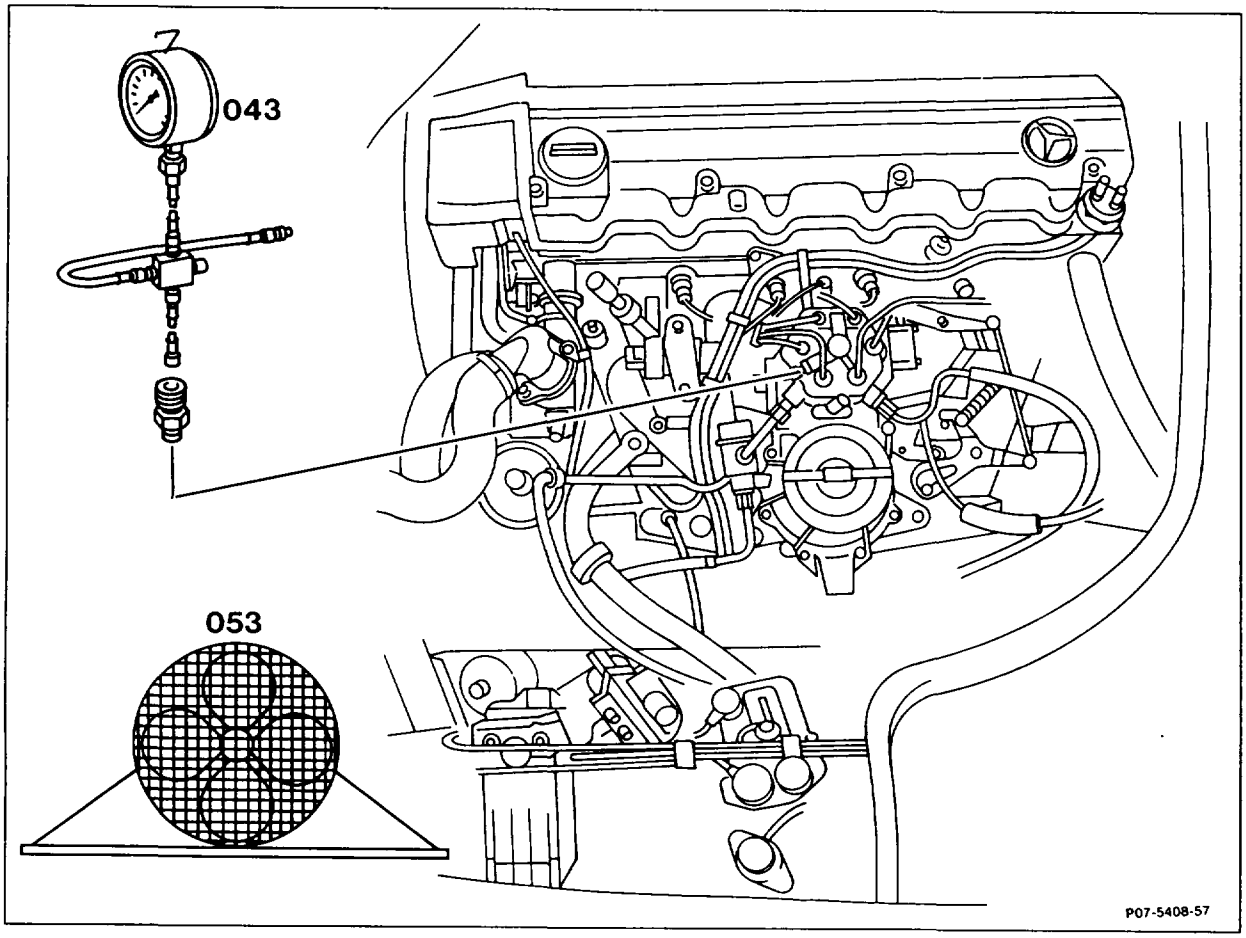

Pressure measuring device (043)	connect (07.3–1603), special tool 103 589 00 21 00, double union 103 589 06 63 00.
Engine	run to build up pressure.
Fan (053)	switch on. Cool engine (or allow to stand overnight).
Cold start	perform, keeping a check on pressure gauge. If necessary, test fuel pressures (07.3–1603) or electronic components of KE injection system (07.3–0121).

Special tools

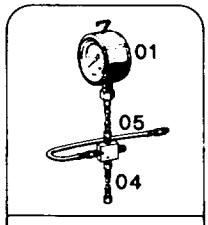

103 589 00 21 00
07

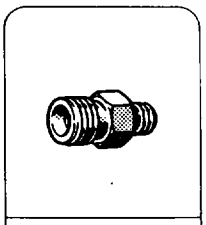

102 589 06 63 00
07

Test and adjustment data

Fuel pressures (in bar gauge)

Engine				103
System pressure when engine cold or at normal operating temperature				5.3–5.5
Lower chamber pressure	engine at normal operating temperature		approx.	0.4 [1])
	coolant temperature +20°C	stationary or engine idling	approx.	0.5 [1])
		and acceleration enrichment		≥3.8
	with decel fuel shutoff			5.3–5.5 [2])

[1]) Below previously measured system pressure.
[2]) Lower chamber pressure equal to system pressure.

07.3–2353 Testing starting device

Proceding work:
Testing, adjusting engine (07.3–1100).

Operation no. of operation texts and work units or standard texts and flat rates: 07–2353.

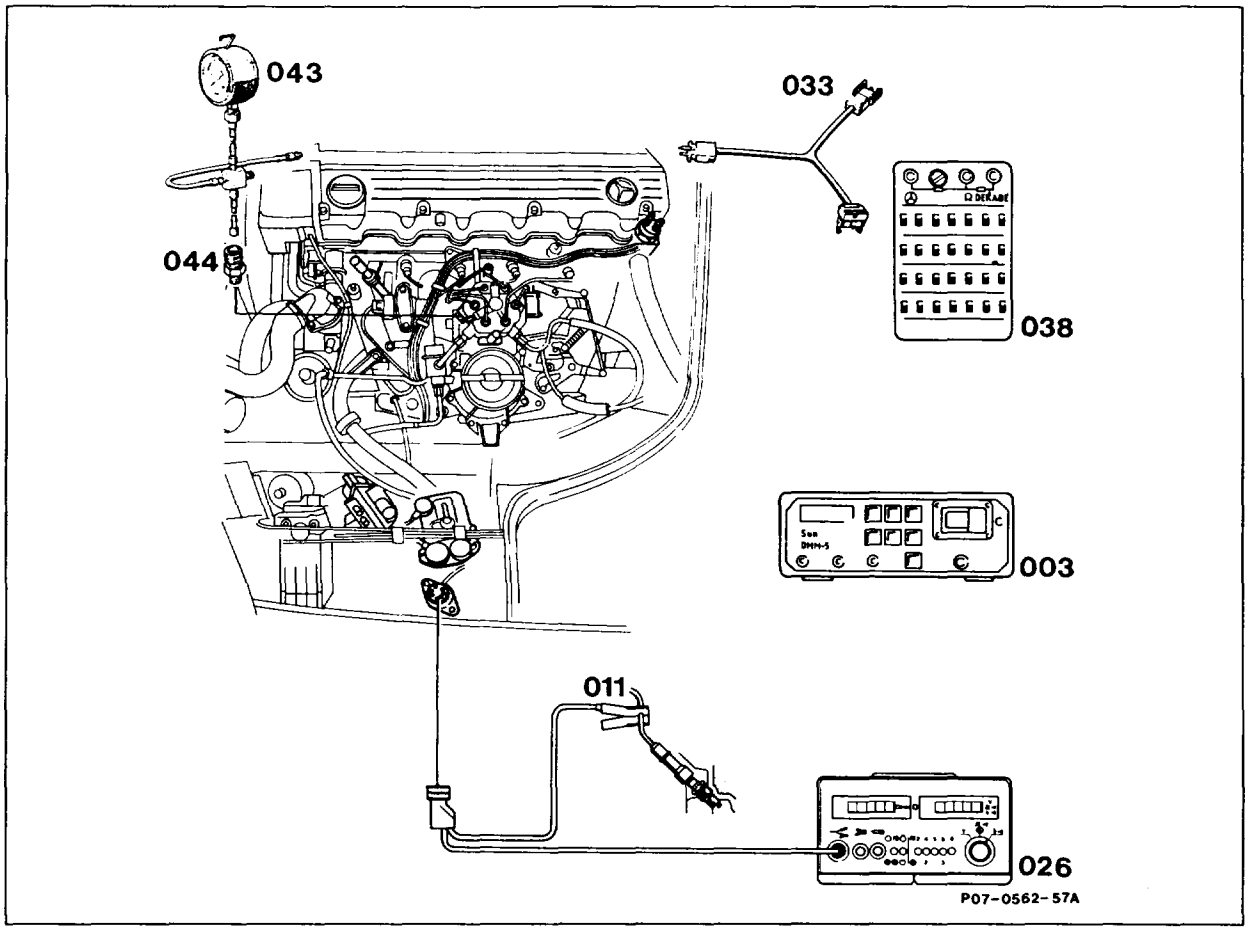

Testers	connect: multimeter (003), engine tester (026), trigger clamp (011), test cable (033) 102 589 04 63 00, ohms decade (038) 124 589 09 63 00, pressure measuring device (043), threaded connector (044).
Fuel pressures and internal leaktightness	test (07.3–1603).
Start valve	check operation and leaktightness.
Post-start enrichment	test.

Special tools

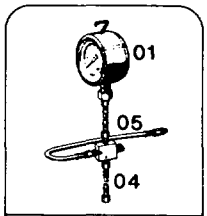

103 589 00 21 00
07

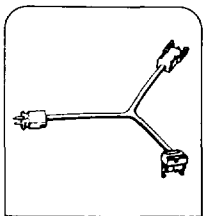

102 589 04 63 00
07

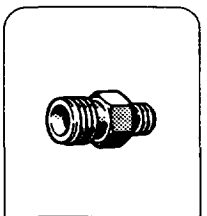

102 589 06 63 00
07

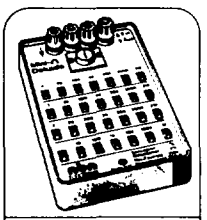

124 589 09 63 00
15 54

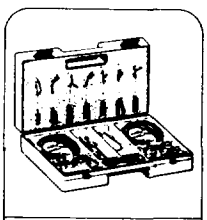

201 589 00 99 00
15 54

Commercially available tools and testers (see Workshop Equipment Manual)

Designation	e. g. Make, order no.
Multimeter	Sun, DMM-5
Digital tester (engine speed, dwell angle, ignition angle)	Bosch, MOT 002.02 Sun, 1019

Symbols for testers

- Multimeter
- Contact box
- Contact
- Ground

Symbols for test mode with multimeter

- Multimeter DC voltage mode
- Multimeter DC mode

Test condition

- Battery voltage 11–14 V

Note

If the specification e.g. of step 2.0 is in order, it is not necessary to perform step 2.1.
See corresponding wiring diagram volume for wiring diagrams.

Test step	Test scope	Test connection	Operation/ Requirement	Specification	Possible cause/Remedy
1.0	Fuel pressures and internal leaktightness	Test lower chamber pressure	Ignition: **OFF** Coolant temperature +20 °C	4.8 – 5.0 bar	Test coolant temperature sensor (07.3–0121)
2.0	Operation and leaktightness of starting valve	Detach fuel line at starting valve Remove starting valve and reconnect fuel line Simulate 10 kΩ at coolant temperature sensor (B11/2) with ohms decade Hold starting valve in a vessel	Engine: **start**	Starting valve must spray	Test starting valve actuation (07.3–1607)
2.1	Leaktightness	–	Dry off nozzle of starting valve	No formation of drops	Replace starting valve

Test step	Test scope	Test connection	Operation/ Requirement	Specification	Possible cause/Remedy
3.0	Post-start enrichment	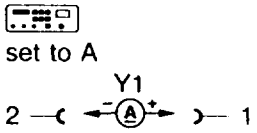	Ignition: **OFF** Connect test cable 102 589 09 63 00 to actuator (Y1) Coupling disconnected from coolant temperature sensor (B11/2) and simulate with 2.5 kΩ (equals approx. 20 °C) [1] KAT: Unplug connector G3/2x2 (oxygen sensor) Engine: **start** Engine runs at fast idle speed	 See table	Test TD engine speed signal at KE control unit (N3)
3.1	TD engine speed signal	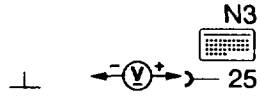	Engine: **start**	6–12 V	Open circuit

[1] Two resistance decades with 4-pin temperature sensor: contact 1 – contact 3, contact 2 – contact 4.

Electrical test data of post-start enrichment

Basic version and national version, except (J) (USA)

Engine	Version	Coolant temperature sensor Coolant temperature +20 °C (warming-up base value) Resistance 2.3–2.8 kΩ Current at actuator mA	Post-start enrichment +20 °C Current at actuator mA
103.94	KAT as of 08/85 up to 08/87	2–6	3–9
	RÜF as of 08/85 up to 08/87	16–22	25–31
	KAT as of 09/87	-1 to -5 60 s after start	4–8 20 s constant
	RÜF as of 09/87	16–22	25–31 20 s constant
	KAT as of 09/90 [1])	0 to -4 60 s after start	4–8 20 s constant
103.980	Std.	15–22	21–27
103.982	KAT	2–6	8–12
	RÜF	15–22	21–27
103.983	KAT as of 09/90 [1])	0 to -4 60 s after start	4–8 20 s constant
103.981 103.983 103.985	KAT up to 08/87	2–6	8–12
	RÜF up to 08/87	15–22	21–27
	KAT as of 09/87	-1 to -5 60 s after start	4–8 20 s constant
	RÜF as of 09/87	15–22	21–27 20 s constant
103.984	KAT	0 to -4 60–120 s after start	4–0 0–20 s after start
	without KAT	15–22 60–120 s after start	21–27 0–20 s after start

[1]) (CH) (DK) (N) (S) (SF) as of model year 1991.

National version, (J) (USA)

Engine	Version	Coolant temperature sensor Coolant temperature +20 °C (warming-up base value) Resistance 2.3–2.8 kΩ Current at actuator mA	Post-start enrichment +20 °C Current at actuator mA
103.94	(J) (USA) 1987	2–6	4–8
	(J) (USA) as of 1988 up to 1989	0 ± 1	4–8
	(USA) as of 1990	0–1 14–110 s after start	8–12 0–8 s after start
103.98	(J) (USA) 1987	2–6	4–8
	(J) (USA) as of 1988 up to 1989	0 ± 1	4–8
	(J) as of 1990	0 ± 1	4–8
	(USA) as of 1990	0–1 14–110 s after start	8–12 0–8 s after start

Arrangement of starting valve fuel line (arrow)

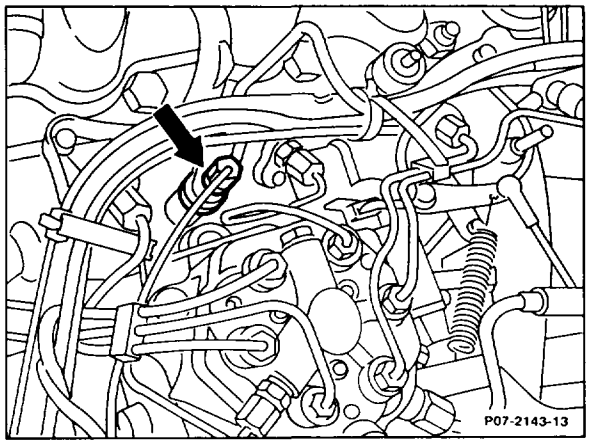

Arrangement of test cable 102 589 04 63 00

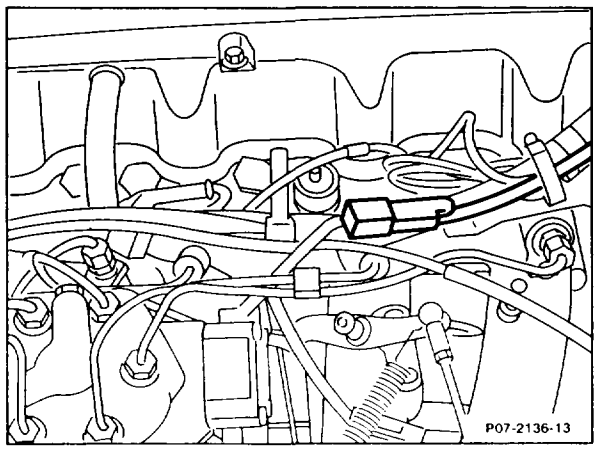

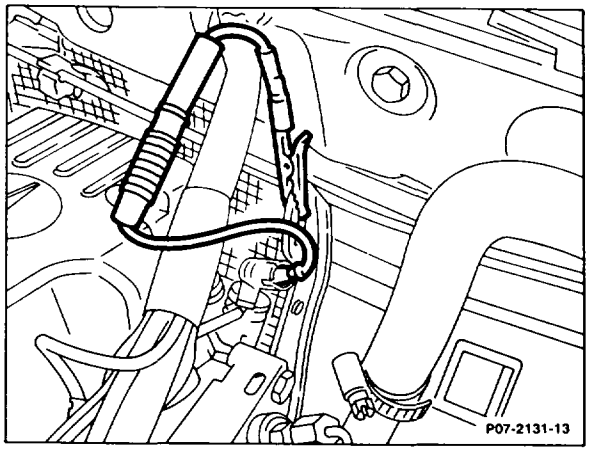

Arrangement of test cable 102 589 05 63 00

Note
Models 107, 124, 126, 201
Plastic connector of starting valve colored green (previously blue).

Production breakpoint: August 1988

Model	Engine	Engine end no. manual transmission	Engine end no. automatic transmission
107.041	103.982	002059	008946
124.026	103.940	023484	052909
124.030/050/090	103.983	025718	132893
124.226	103.943	000306	000695
124.230/290	103.985	001461	005179
126.020	103.941	003608	012193
126.024/025	103.981	006066	066140
201.029	103.942	011110	015021

Note

Start valve with 1.2 amperes (previously 3 amperes) and improved seal at armature.

Production breakpoint: 05/90

Model	Engine	Engine end no. manual transmission	Engine end no. autom. transmission
124.026	103.940	030980	083228
124.030/050/090	103.983	037025	210930
124.226	103.943	000522	001278
124.230/290	103.985	002519	011486
126.020	103.941	004622	015299
126.024/025	103.981	008095	116454
129.060	103.984	000278	001083
201.029	103.942	017184	047204

07.3–5203 Testing on/off ratio (USA) as of 1986

Operation no. of operation texts and work units or standard texts and flat rates:
07–5203.

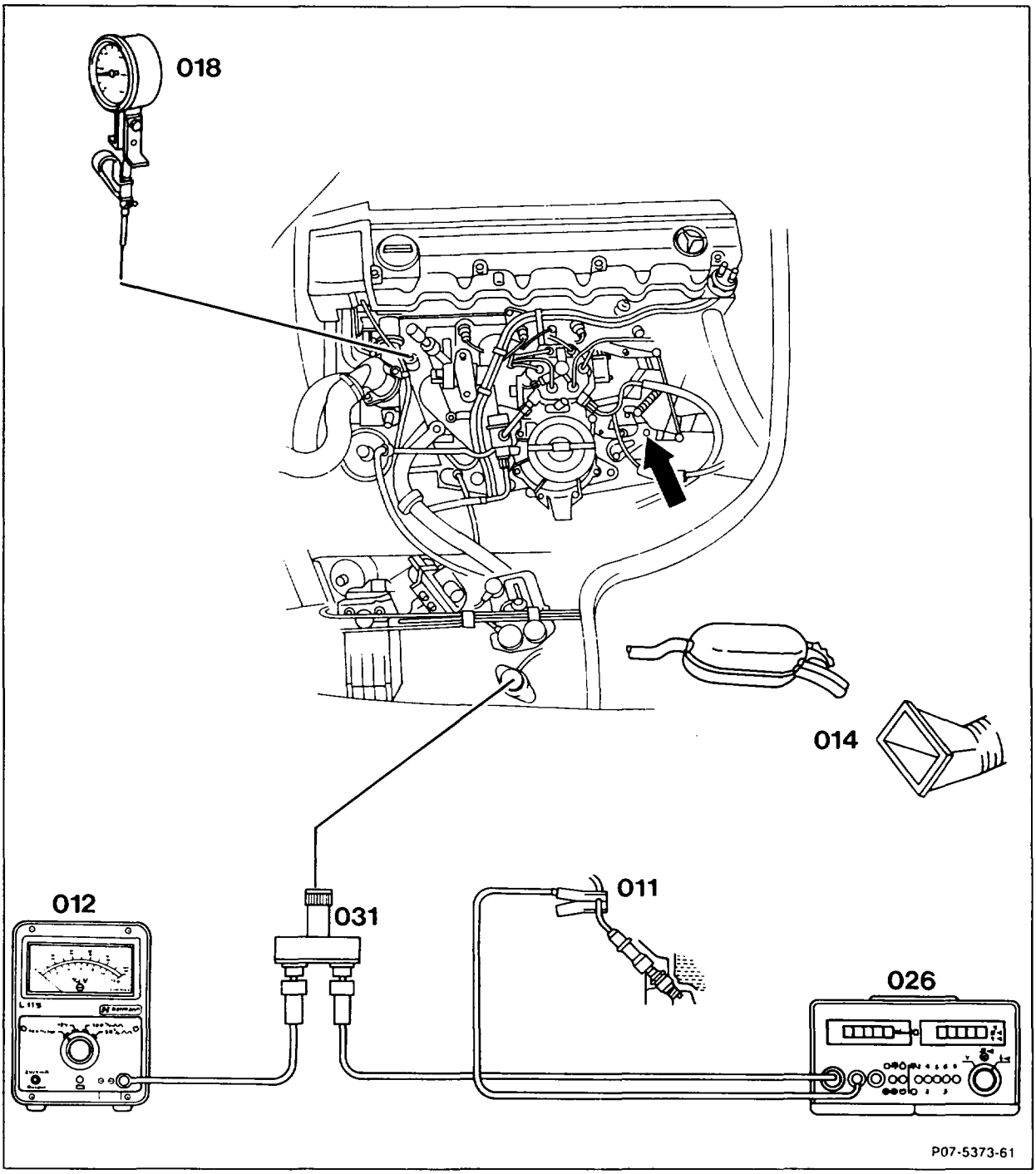

Air conditioner or automatic climate control	switch off.
Selector lever	move into position "P."

Testers	connect: oil remote thermometer (018) 124 589 07 21 00, lambda control tester (012), twin socket (031), engine tester (026), trigger clamp (011).
Extraction device (014)	position at exhaust tailpipe.
Accelerator control (arrow)	check ease of movement and condition.
Ignition timing	test (see table).
Engine oil temperature	approx. 80°C.
Idle speed	test (see table).
Lambda control	test (see table).
	⚠ Any adjustment which is necessary must only be performed when replacing a fuel injection system component or performing engine repairs. Pay attention to note. Install repair kit 102 070 01 74.
Smooth engine running	check, switch on all ancillaries for this step.

Test and adjustment data

National version (USA) **1986 – 1989** information plate black
(USA) as of **1990** information plate Federal black, California yellow

Engine	Version	Idle speed		Idle emissions level	Lambda control
		1/min	Control range	% CO	Control range %
103.94	(USA)	700 ± 50	35–45%	–	[1]
103.98		650 ± 50; as of model year 1990 700 ± 50			

[1] Test lambda control at 2500/min and read off average value. Detach regeneration line at regeneration valve for this step and close. Compare this reading with the idle speed reading. The average value at idle speed must not differ by more than ± 10 from the reading obtained at 2500/min.

EZL ignition timing

Engine	EZL ignition control unit	Engine speed 1/min	Ignition timing point in ° CA before TDC		
			Resistance trimming plug position or fuel type	Without vacuum	With vacuum
National version (USA)					
103.940 103.942	005 545 84 32 005 545 86 32 006 545 73 32 006 545 75 32 008 545 61 32 008 545 63 32 008 545 95 32 009 545 79 32	3200	Reference resistor 750 Ω	25–29	40–44
		Idle speed		7–11	7–11
103.981 103.983	004 545 44 32 004 545 46 32 005 545 85 32 005 545 87 32 006 545 74 32 006 545 76 32 008 545 96 32 009 545 80 32	3200	Reference resistor 750 Ω	27–31	40–44
		Idle speed		6–11	6–11

Special tools

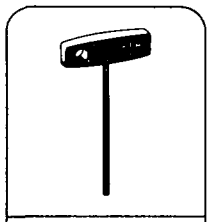

000 589 14 11 00
07

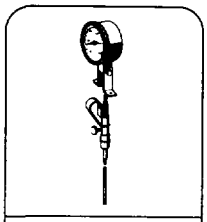

124 589 07 21 00
18

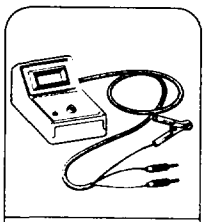

124 589 19 21 00
07 83

Lambda control tester

909 589 00 21 00

Commercially available tools and testers (see Workshop Equipment Manual)

Designation	e.g. Make, order no.
Twin socket	Hermann, ECD 53
Engine tester (engine speed, dwell angle, ignition angle)	Bosch, MOT 001.03

Shop-made tool

Slugging drift for steel anti-tamper lock.

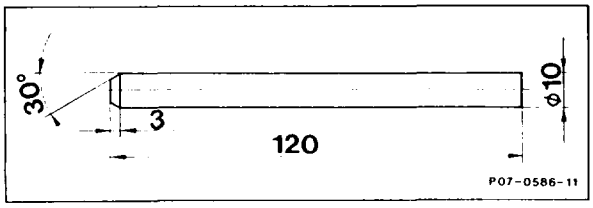

Note
The adjusting device (42) for the fuel/air mixture setting is protected against unauthorized adjustment with a steel anti-tamper lock (41).

This anti-tamper lock is knocked in with a special tool in the factory after setting the fuel/air mixture and **must not be removed in the workshop.**

The fuel/air mixture setting may only be corrected when replacing a component of the fuel injection system (e.g. fuel distributor) or when performing engine repairs.
In this case, the adjusting device (42) must be replaced.

The lambda control must not be tested when the engine is too hot, e.g. immediately after driving sharply or after measuring engine output on the dynamometer.

1 Switch off air conditioner or automatic climate control. Move selector lever into position "P."

2 Connect testers:
oil remote thermometer (018) 124 589 07 21 00,
lambda control tester (012),
twin socket (031),
engine tester (026),
trigger clamp (011).

3 Position extraction device (014) at exhaust tailpipe.

4 Check ease of movement and condition of accelerator control.

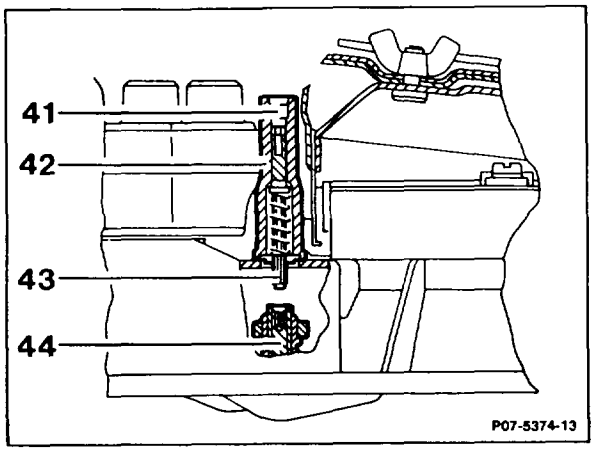

41 Steel anti-tamper lock
42 Adjusting device
43 Hexagon head
44 Mixture regulating screw

5 Test ignition timing (see table).

6 Warm engine up to oil temperature of approx. 80°C.

7 Test idle speed (see table).

Note
If idle speed differs, test electronic idle speed control (07.3–2006).

8 Test lambda control.

Note

Lambda control tester	Position
Bosch	100% IR
Hermann	100% ⏦

The readout must fluctuate during the measurement. If a constant readout is displayed there is a fault in the lambda control, e.g. oxygen sensor unplugged. See "Testing electronic components of KE injection system" (07.3–0121) for trouble-shooting diagram.

- Detach regeneration line to throttle valve assembly at regeneration valve (78) and seal.
- Connect tester to diagnostic socket.

- Test button as specified in the table. Test on/off ratio at 2500/min and read off average value. Compare this reading with the idle speed value. The average value at idle speed must not differ by more than ±10 (as of 1989 +10) from the reading obtained at 2500/min.

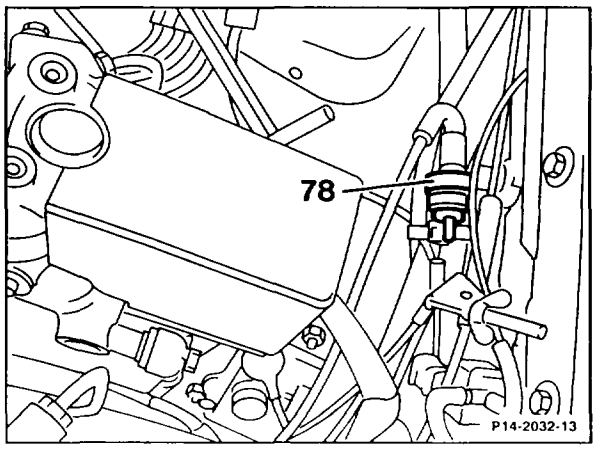

Only (USA) California as of model year 1988 and (USA) (J) as of model year 1990

The KE control unit must be switched over to on/off ratio output with the pulse reader or with the pushbutton switch (California only) at the test coupling for diagnosis (X92 or X11/4) (see also 07.3–0121, section d).

(USA) Californien version:
Operate pushbutton switch (2, arrow) at test coupling (X92 or X11/4) for between 2 and 4 seconds. LED (4) flashes once (no fault stored in system).
Once again press pushbutton switch (2) for between 2 and 4 seconds. KE control unit is switched over to on/off ratio output. LED shows a steady light.

Note
"CHECK ENGINE" warning light does not come on.
If "CHECK ENGINE" does not light up, perform test program 07.3–0121, testing electrical components of KE injection system.

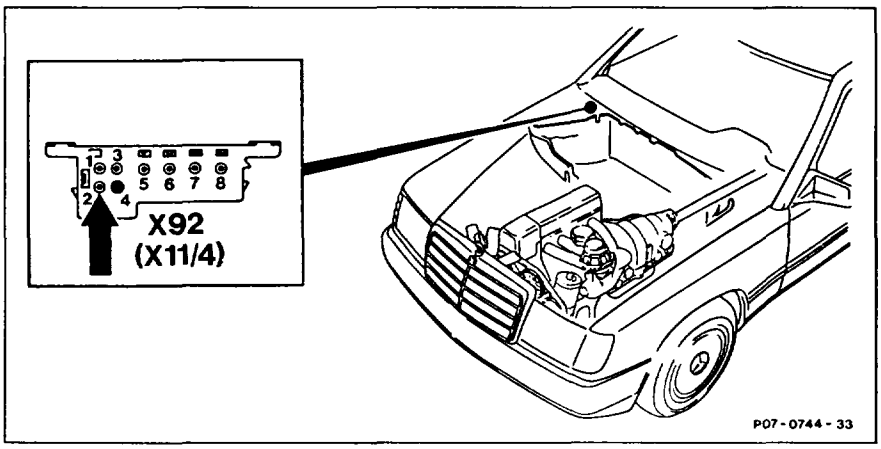

Models 124, 126, 201 up to model year 1989

Models 124, 126, 201
as of model year 1990

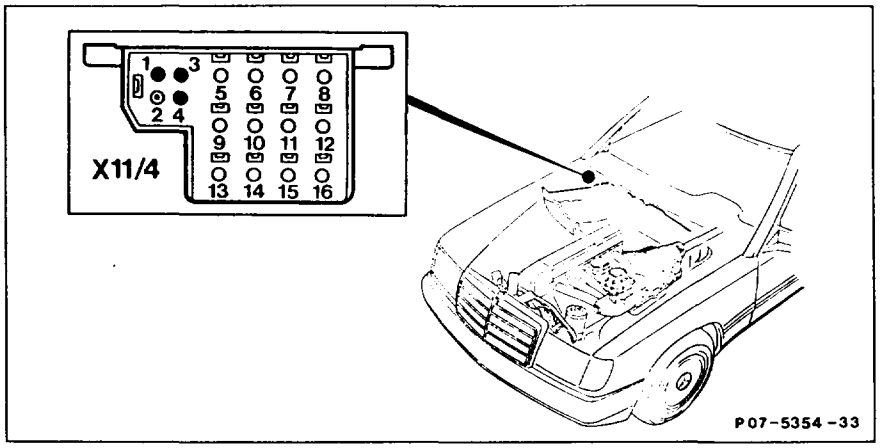

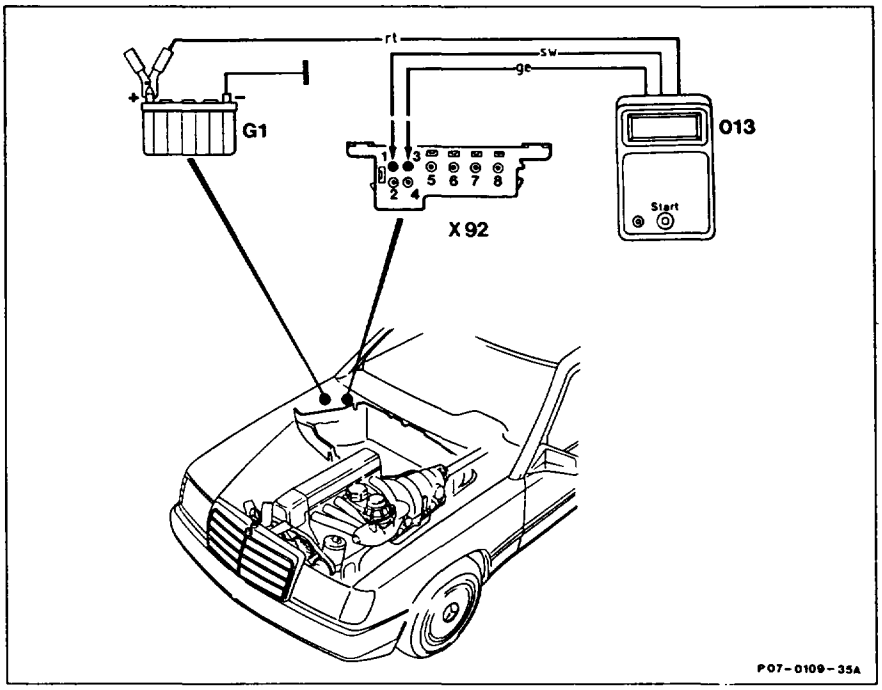

013	Pulse counter
G1	Battery
X92	Test coupling for
(X11/4)	diagnosis (flash code)

Note

The fault memory must have been read out first before the output for the fault diagnosis using the on/off ratio can be performed.
If the pulse readout is "1" or after the last fault has been read, the pushbutton switch on the pulse counter must once again be pressed (2–4 seconds) in order to output the on/off ratio.

9 Set lambda control.
If it is necessary to set the on/off ratio after performing engine repairs or replacing a part of the KE injection system, proceed as folows:

- Take off air cleaner.

- Make punch marks in the middle of the shear bolts (arrows) and drill approx. 6–8 mm deep with a 2.5 mm twist drill.

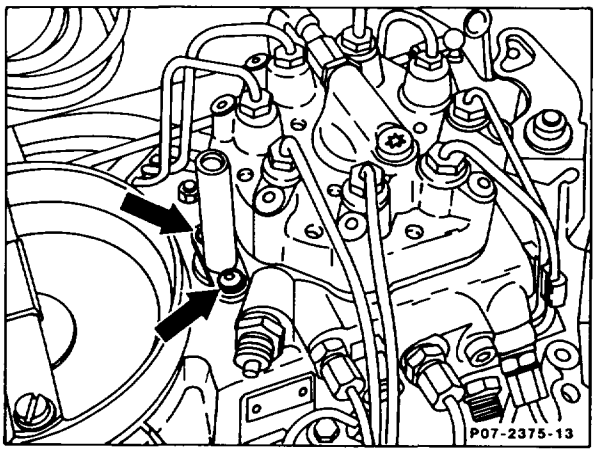

⚠
Do not drill through bolts as the metal swarf can cause engine damage. Thoroughly remove metal swarf with cleaning rags.

- Unscrew shear bolts with left-hand twist drill.

- Install new repair kit, part no. 102 070 01 74. Tighten bolts until the head shears off.

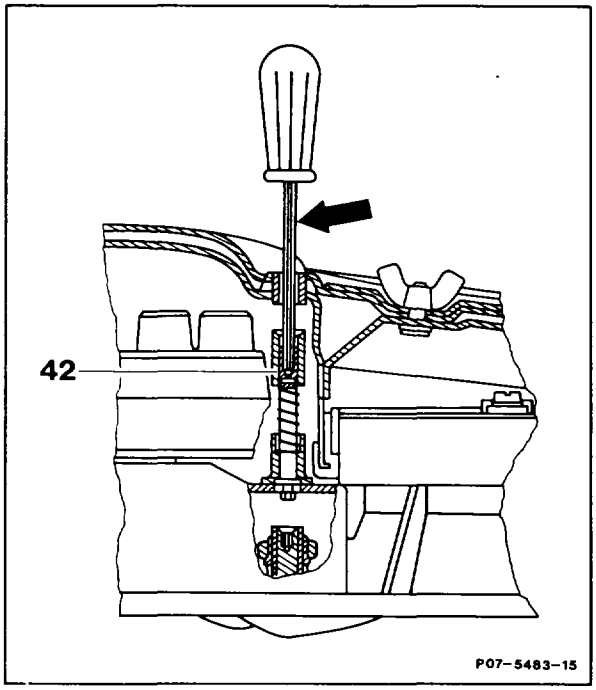

- Fit on air cleaner.

- Start engine.

- Insert the screwdriver (arrow) through the opening in the top of the air cleaner and press onto the adjusting device (42).

- Press the adjusting device down with a screwdriver against the spring force, turn slightly until the hexagon head (43) engages in the mixture regulating screw (61):
Turning to left = leaner – on/off ratio rises.
Turning to right = richer – on/off ratio drops.

After each adjustment, briefly accelerate and check deviations between 2500/min and idle speed, adjust if necessary.

- Switch off engine.

- Take off air cleaner.

- Use the shop-made slugging drift to knock in steel anti-tamper lock (41) with the chamfered side sufficiently for the surface of the anti-tamper lock to be flush with the bottom edge of the taper of the adjusting device (42) or to be slightly deeper.

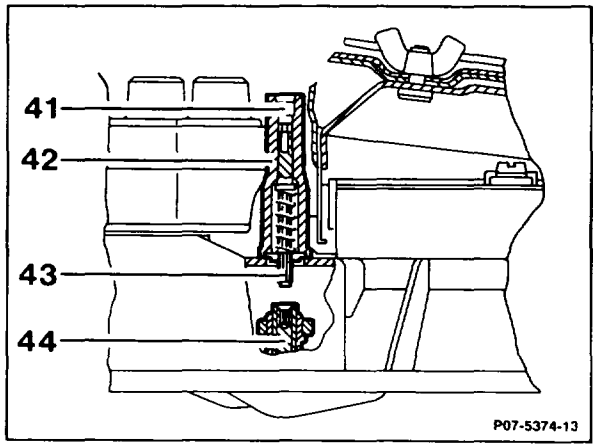

- Install air cleaner.

- Re-connect regeneration line.

10 Check smooth engine running by moving selector lever into Drive mode, switching on air conditioner/automatic climate control, turning power steering to full lock. Engine must still run smoothly. If necessary, test electronic idle speed control (07.3–2006).

Note
Models 107, 124, 126
Since January 1989 the steel anti-tamper lock (41) has been designed as a steel ball, previously steel cylinder.

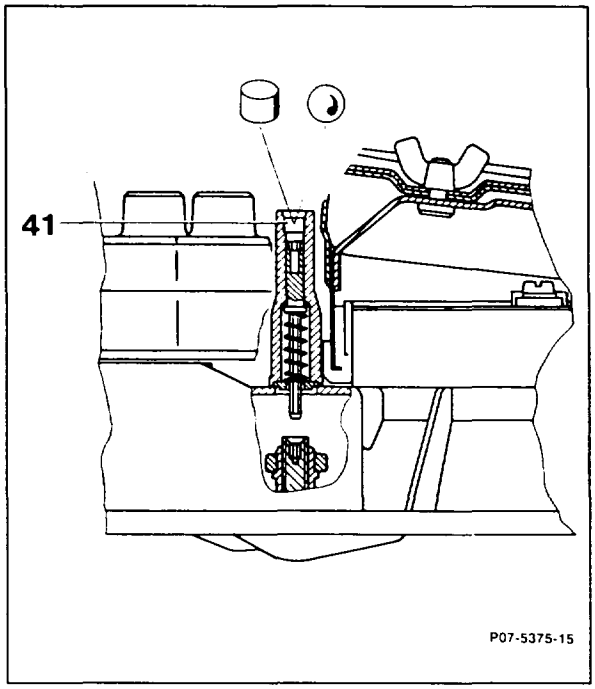

Production breakpoint: 12/88

Model	Vehicle ident end no.
124 Station Wagon	F 096787
201	F 574637

Production breakpoint: 01/89

Model	Vehicle ident end no.
124 Sedan	A 933300
124 Coupé	A 934867
126	A 458731

07.3–5303 Replacing oxygen sensor

Operation no. of operation texts and work units or standard texts and flat rates:
07–5303.

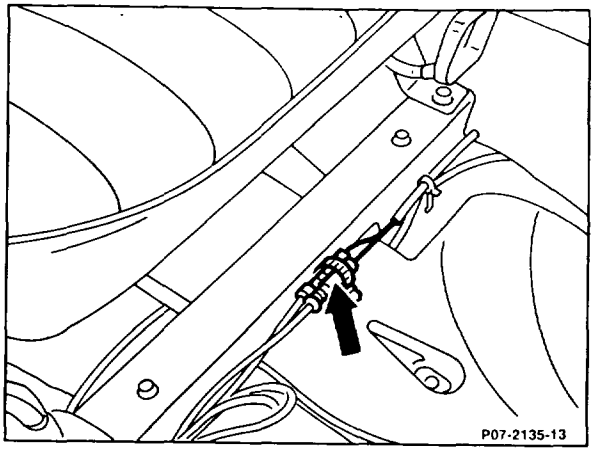

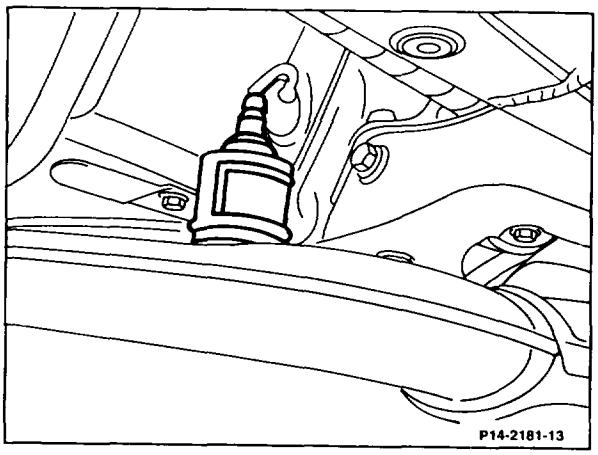

Plug connection of oxygen sensor heating coil (G3/2x1) and plug connection of oxygen sensor signal (G3/2x2) (arrow)	separate in passenger compartment, fit together. Pay attention to note for model 129.
Cable of oxygen sensor with rubber grommet	press to outside from passenger compartment, insert.
	Installation note Ensure rubber grommet is correctly seated in transmission tunnel.
Splash water plate	pull off, fit on.
	Installation note Install heat transmission plate with the opening to the rear.
Oxygen sensor	unscrew, install. Tightening torque: 50–60 Nm.
	Installation note Coat thread with paste 000 989 76 51.
Lambda control	test, adjust (07.3–2053 or (USA) 07.3–5203).

Model 129

The 3-pin oxygen sensor plug connection (G3/2x1) is located on the outside right at the transmission tunnel.

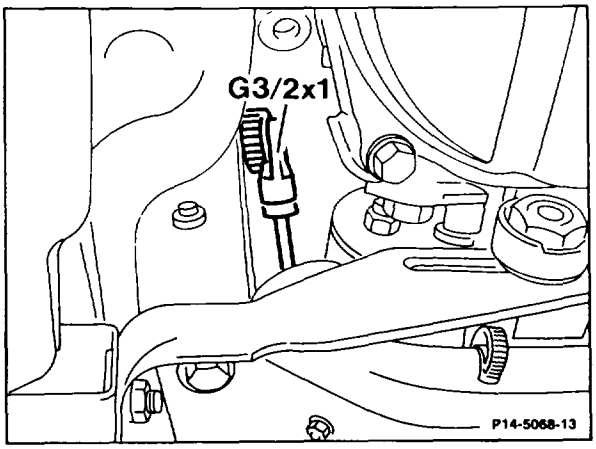

Note

Slackening union nut = turn counter-clockwise.
Tightenint union nut = turn clockwise.

Models 107, 126

In right footwell below floor plate.

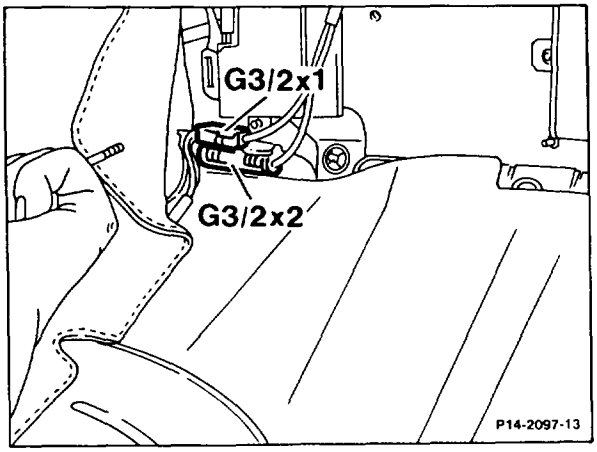

G3/2 x 1 Plug connection, oxygen sensor heating coil
G3/2 x 2 Plug connection, oxygen sensor signal

Note re model 124

On all vehicles of model 124 with M103, the oxygen sensor with the identification OS 0002 can be installed when retrofitting RÜF vehicles or when replacing the sensor.
If the oxygen sensor OS 0001 is stated in the vehicle registration document page 4, para 34, the vehicle owner must also be given a copy of the certificate of the Motor Vehicle Registration Office in addition as a confirmation that the oxygen sensor OS 0002 has been installed (applies to Germany only).

07.3–5563 Removing and installing fuel filter

Operation no. of operation texts and work units or standard texts and flat rates:
07–5563.

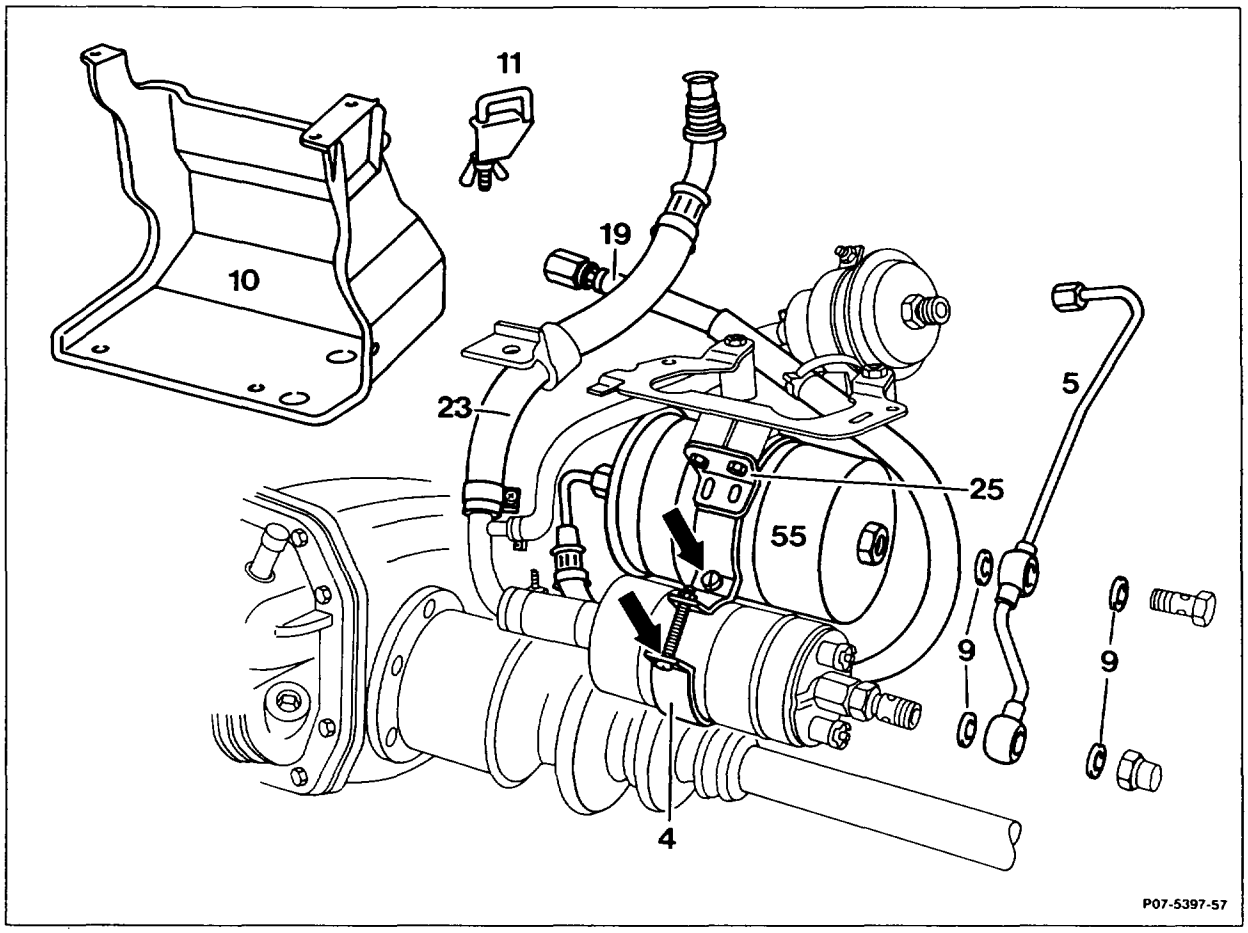

Models 107, 126: fuel pump set with one fuel pump

Note
Models 124, 129, 201 (without (USA) and Gulf States)
Model 124 (as of 02/93), model 129 (as of 06/93), model 201 (as of 01/93) conversion of fuel filter to 0.4 liter (was 0.6 liter).

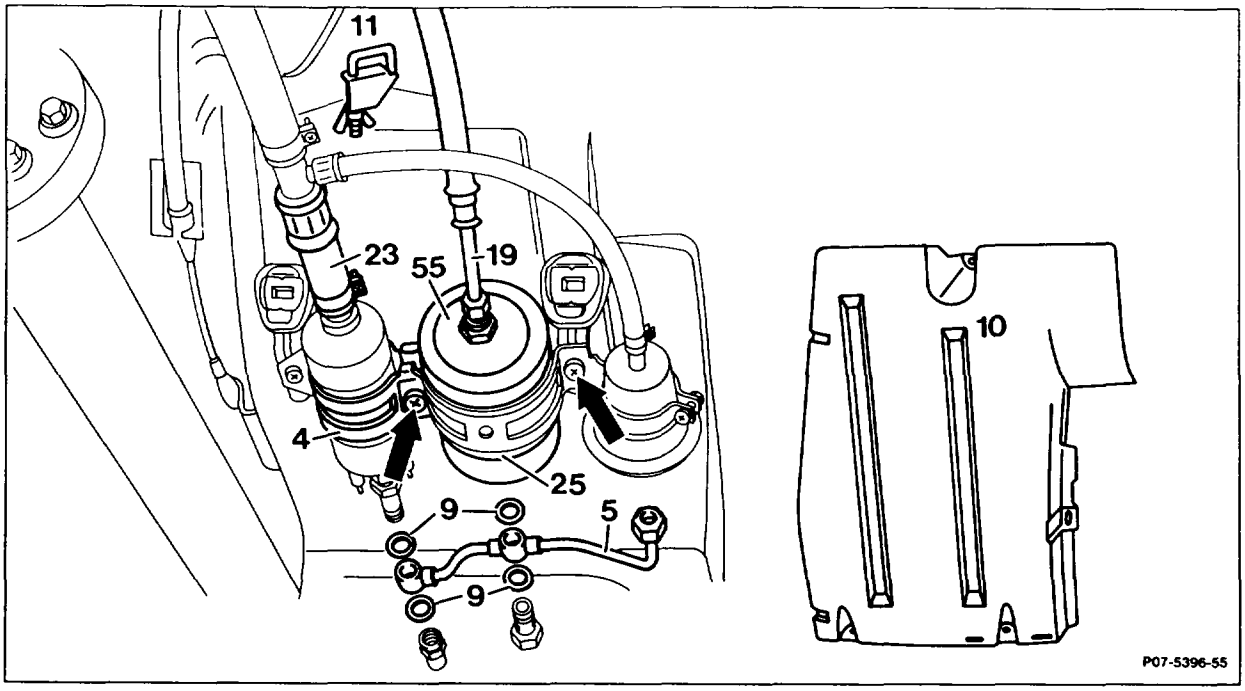

Model 124: fuel pump set with one fuel pump

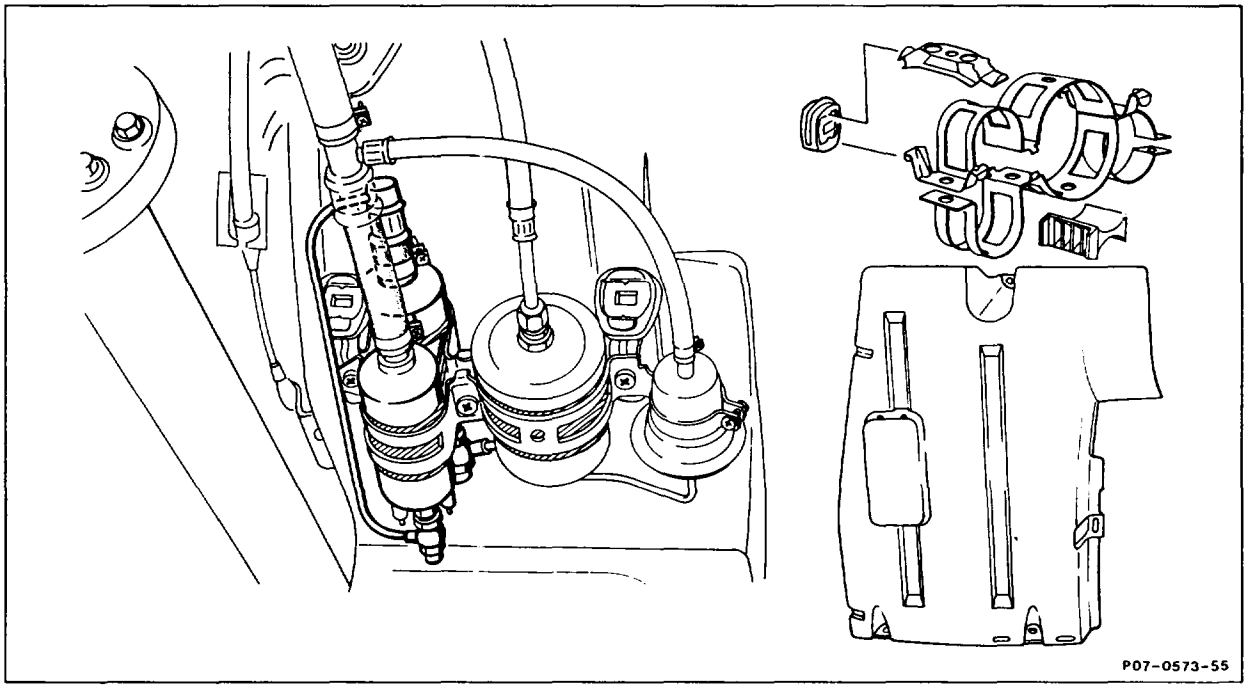

Models 124, 129: fuel pump set with two fuel pumps

Pressure in fuel tank	release by opening cap, close.
Ground cable at battery	disconnect, connect.
Protective box (10)	unscrew, screw on.
Fuel suction hose and fuel pressure hose (23, 19)	pinch off with clamp (11). Special tool 000 589 40 37 00. For model 124.090 pay attention to note (07.3–5710).
Fuel line (5)	at fuel accumulator, fuel pump and fuel filter, unscrew, screw on.
Fuel pressure hose (19)	unscrew, screw on.
Securing screws (arrows)	at holder (4) slacken, tighten.
Fuel filter (55)	remove, insert.
	Note When exchanging the fuel filter, it is essential to ensure that the plastic sleeve (25) is installed between fuel filter and holder (4). It must project on both sides of the holder as direct contact of the fuel filter with the holder can cause contact corrosion.
Seals (9)	replace.
Leaktightness of all connection points	check with engine running.

Special tool

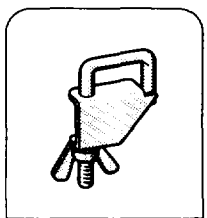

000 589 40 37 00
00

07.3–5701 Testing fuel pump

Operation no. of operation texts and work units or standard texts and flat rates:
07–5701 Delivery,
07–5702 Fuel pressure.

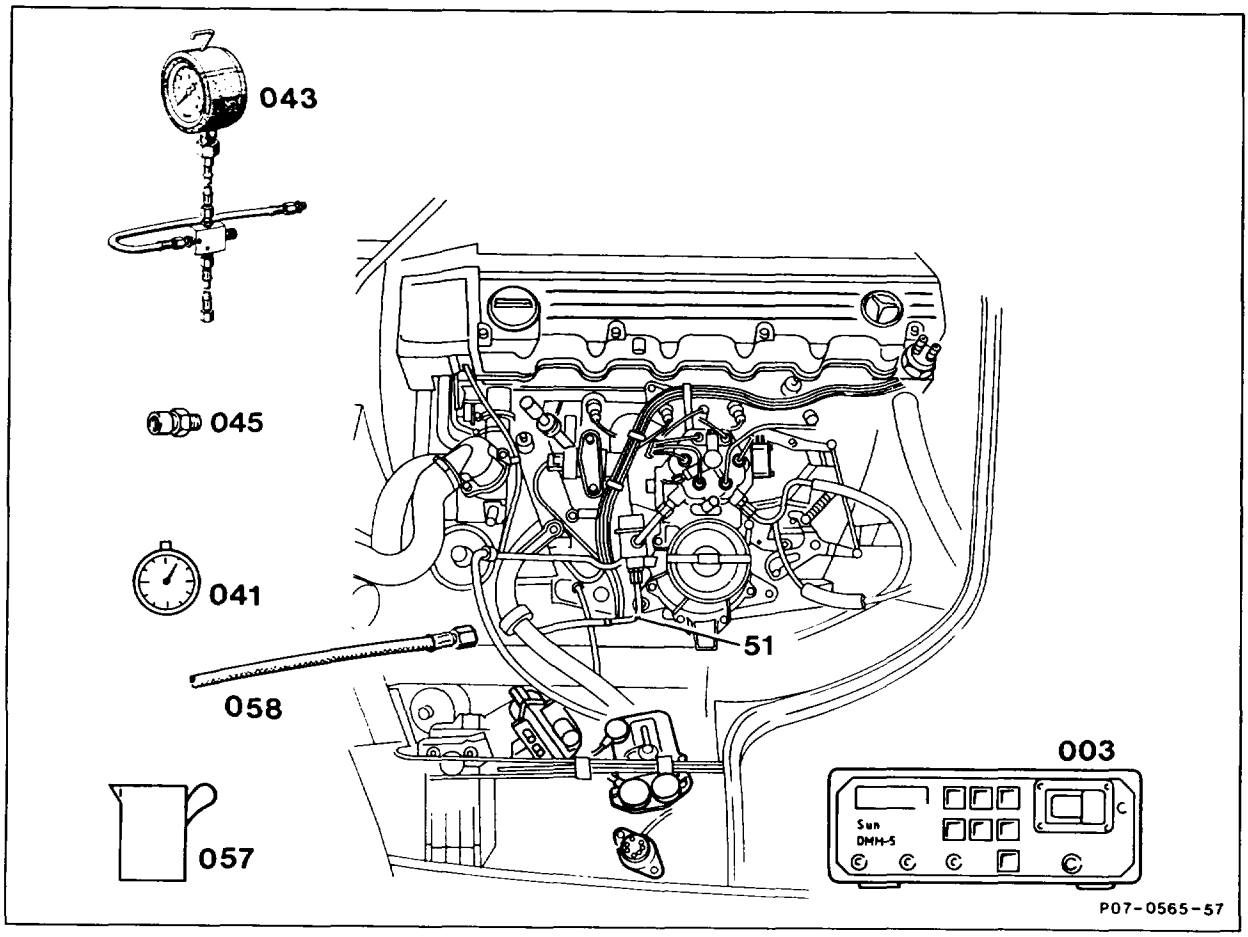

Current consumption	test. Specification 6–10 amperes (step 1). Use multimeter tester (003) for this step.
Fuel pressure in fuel tank	release by opening cap.
Fuel return line (51)	unscrew.
Fuel hose (058)	shop-made; connect to diaphragm pressure regulator.
Delivery	test. Specification 1 liter in not more than 40 seconds. Use measuring beaker (057), stop watch (041) for this step.

Fuel pressure . . . . . test. Specification 2–4 bar gauge.
Use testers, pressure measuring device (043)
103 589 00 21 00, connection fitting (045)
103 589 02 63 00, for this step.

Test data

Version		1 fuel pump	2 fuel pumps
Designation		EKP4	EKP6
MB part no.		002 091 97 01	002 091 59 01 [1]
Bosch no.		0 580 254 943	0 580 254 951
Pierburg, two-stage		–	E2T
Current consumption		6–10 A [3]	4–8 A [3]
Test specification		Engine not running and voltage at delivery pump at least 11.5 volts.	
Delivery [2]	Measuring point	Fuel return line downstream of diaphragm pressure regulator.	
	at least 1 liter in	40 seconds	

[1] Part no. 002 091 88 01.
[2] Fuel tank must be at least half full for measuring delivery.
[3] For vehicles in KAT version, detach plug connection (G3/2 × 1) of oxygen sensor heating coil.

Special tools

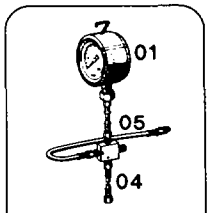

103 589 00 21 00
07

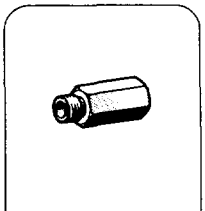
103 589 02 63 00
07

201 589 00 99 00
15 54

Commercially available tools and testers (see Workshop Equipment Manual)

Designation	e.g. Make, order no.
Multimeter	Sun, DMM-5
Measuring glass or beaker (at least 1 liter)	
Stop watch	

Shop-made tools	
Fuel hose	approx. 500 mm long
Pipe with sealing cone	
Union nut	M14 × 1.5

Note
See appropriate wiring diagram volume for wiring diagrams.
When the ignition is switched on, the fuel pumps must briefly run (approx. 1 second) (audible).

A. Delivery

1 Remove fuel pump relays (N16/1 to N16/4).
Multimeter set to amperes.
Test current consumption at contact 7 (terminal 87) and contact 8 (terminal 30), on model 129 engine systems control unit MAS between contacts 1 and 2, for (J) (USA) as of model year 1990 on KE control unit (N3) between contacts 11 and 20.

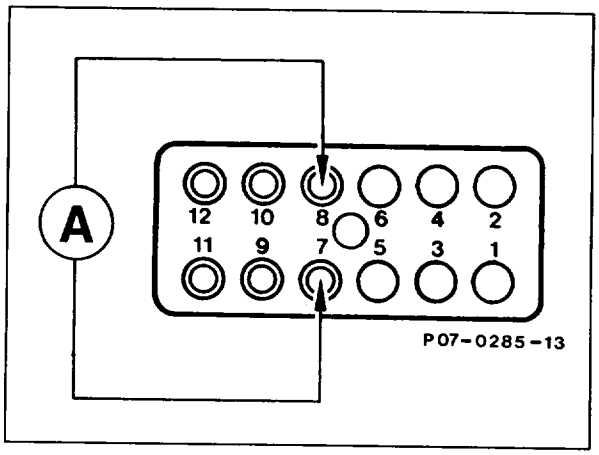

Current consumption 6–10 amperes.

If more than 10 amperes are measured, test as follows:

a) Vehicles with KAT
Detach plug connection (G3/2x1) of oxygen sensor heating coil and repeat measurement. Located on models 107 and 126 in right footwell below floor panel.
Test current consumption of oxygen sensor 0.5–1.7 A, if necessary oxygen sensor (see 07.3–0121, test program with contact box, on/off ratio readout 50%).

b) Test fuel pressure (see section "B").

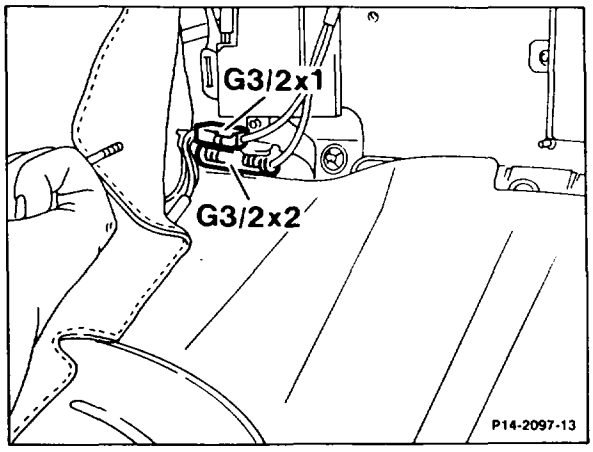

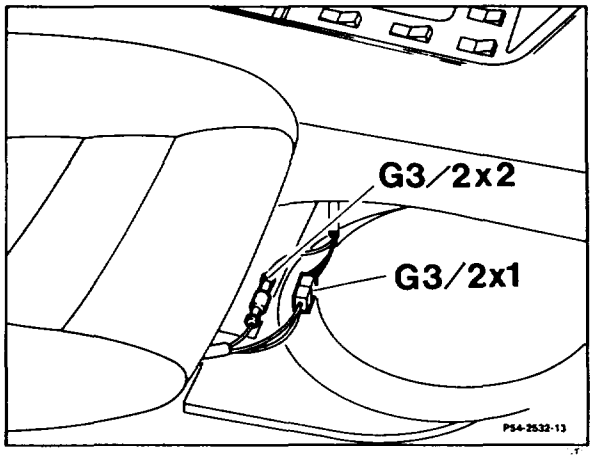

Located on models 124, 201 on right at front seat.

G3/2x1 Plug connection, oxygen sensor heating coil
G3/2x2 Plug connection, oxygen sensor signal

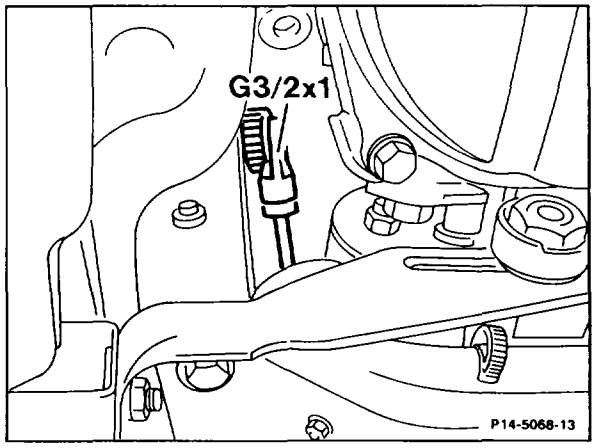

Model 129
G3/2x1 Plug connection, oxygen sensor

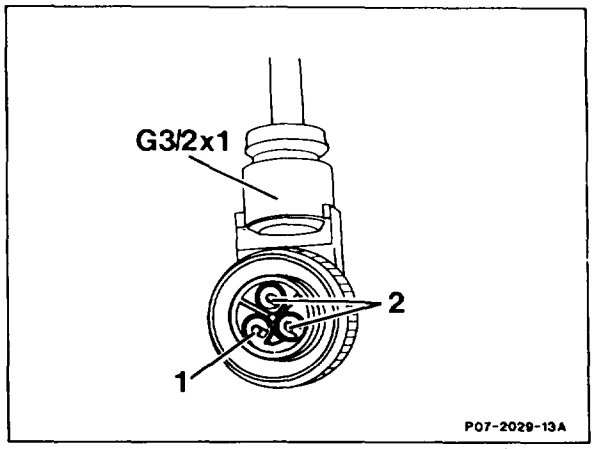

Model 129

G3/2x1	Plug connection, oxygen sensor
1	Oxygen sensor signal
2	Oxygen sensor heater

2 Unplug wiring from multimeter.

The delivery of the fuel pump should be tested in the fuel return.

Reduce fuel pressure in fuel tank by opening cap. Unscrew fuel return line (50) at the diaphragm pressure regulator and seal.

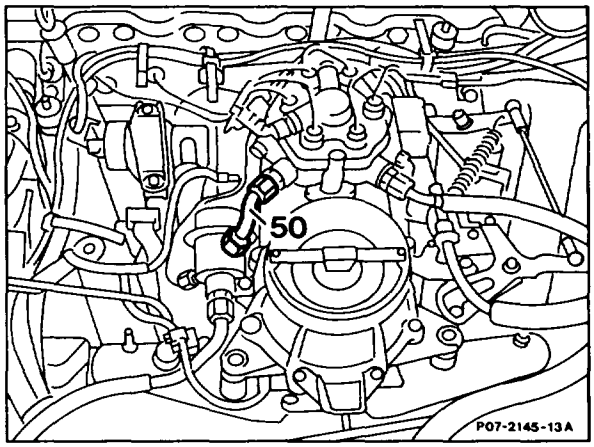

3 Screw shop-made fuel hose onto diaphragm pressure regulator and hold in measuring glass or beaker.

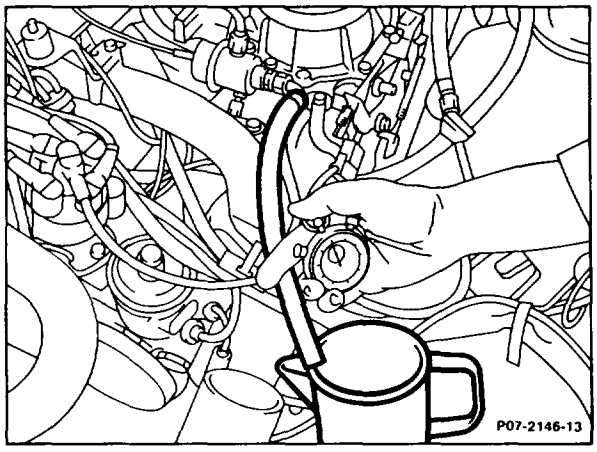

4 Bridge contacts 7 and 8 at fuel pump relays (N16/1 to N16/4), on model 129 engine systems control unit MAS between contacts 1 and 2, for (J) (USA) as of model year 1990 on KE control unit (N3) between contacts 11 and 20. This energizes the fuel pump.

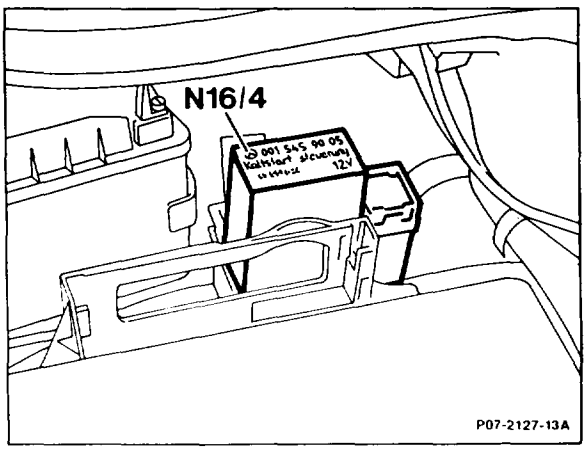

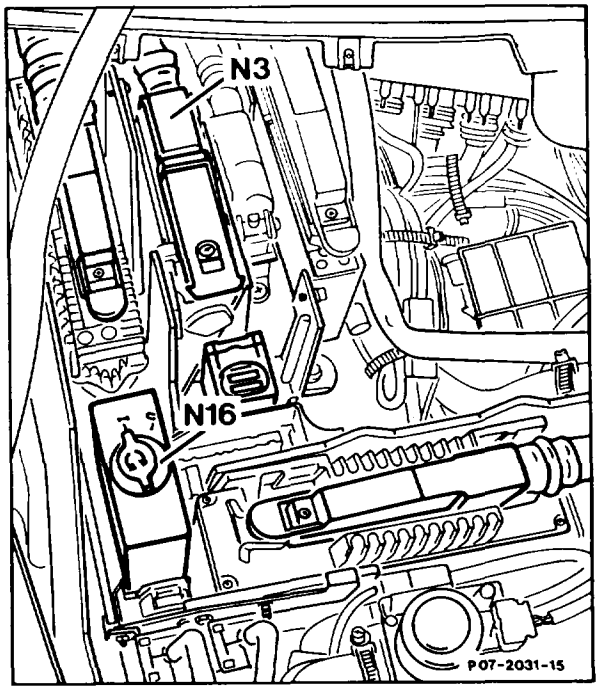

N3 KE control unit
N16 Engine systems control unit

On model 107 detach 8-pin coupling of taillamp harness (X18) in left footwell below floor panel. Connect terminal 2 to terminal 30 (terminal junction next to overvoltage protection).

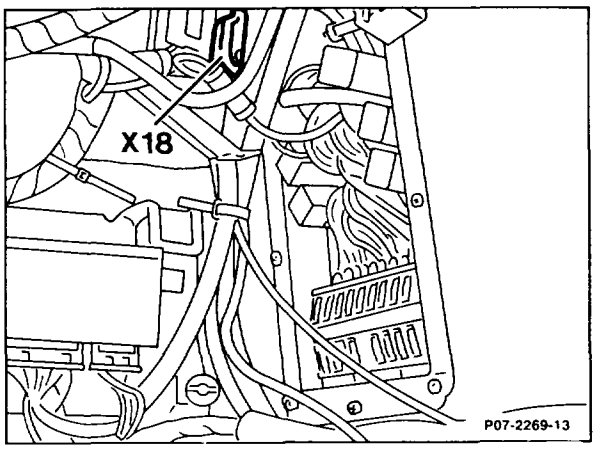

Model 107

After 40 seconds or before measuring glass/beaker overflows, remove bridge.

Specification:
1 liter in not more than 40 seconds with a minimum voltage of 11.5 volts at fuel pump.

5 If delivery is less than 1 liter in 40 seconds, test the following points:

a) Test voltage at fuel pump.
Specification at least 11.5 volts.
b) Check whether strainer in feed connection of fuel distributor is blocked.
c) Check fuel lines for restrictions (pinched lines).
d) Pinch off leak line between fuel accumulator and intake damper. Once again check delivery. If the specified delivery is achieved, replace fuel accumulator.
e) Replace fuel filter.

6 If the delivery remains too low, determine the faulty fuel pump by measuring pressure (section "B").

7 Connect fuel return hose, install relays.

B. Fuel pressure

Note
Measurement only with double pump.
Arrangement of protective box and fuel pump, see removing and installing fuel pump (07.3–5710).

1 Unscrew cap nut at fuel pump (M3m1); fit on threaded connector, part no.103 589 02 63 00, and pressure measuring device, part no. 103 589 00 21 00 (arrow).

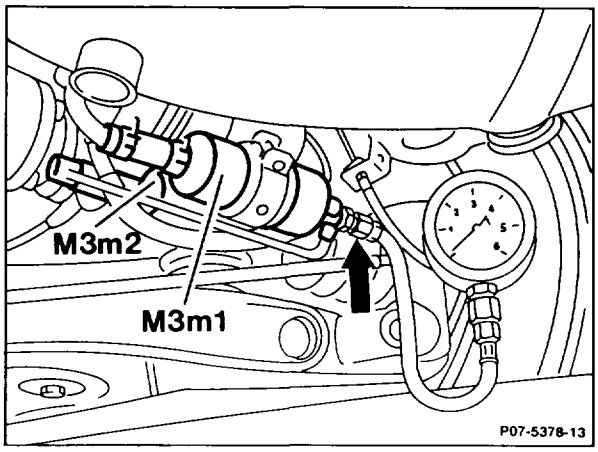

Models 124, 201 with 2 fuel pumps

2 Remove fuel pump relays (N16/1 to N16/4) and bridge the two contacts 7 and 8 (terminals 30 and 87), on model 129 engine systems control unit MAS between contacts 1 and 2, for (J) (USA) as of model year 1990 on KE control unit (N3) between contacts 11 and 20.

4 Read off pressure on gauge. The reading must be between 2–4 bar. If it is below 2 bar, fuel pump 1 (M3m1) is faulty. If it is more than 4 bar, fuel pump 2 (M3m2) is faulty.

5 Detach pressure measuring device. Fit on cap nut, install fuel pump relays and check for leaks.

6 Install protective box.

Operation no. of operation texts and work units or standard texts and flat rates:
07–5710.

A. Fuel pump set with one fuel pump

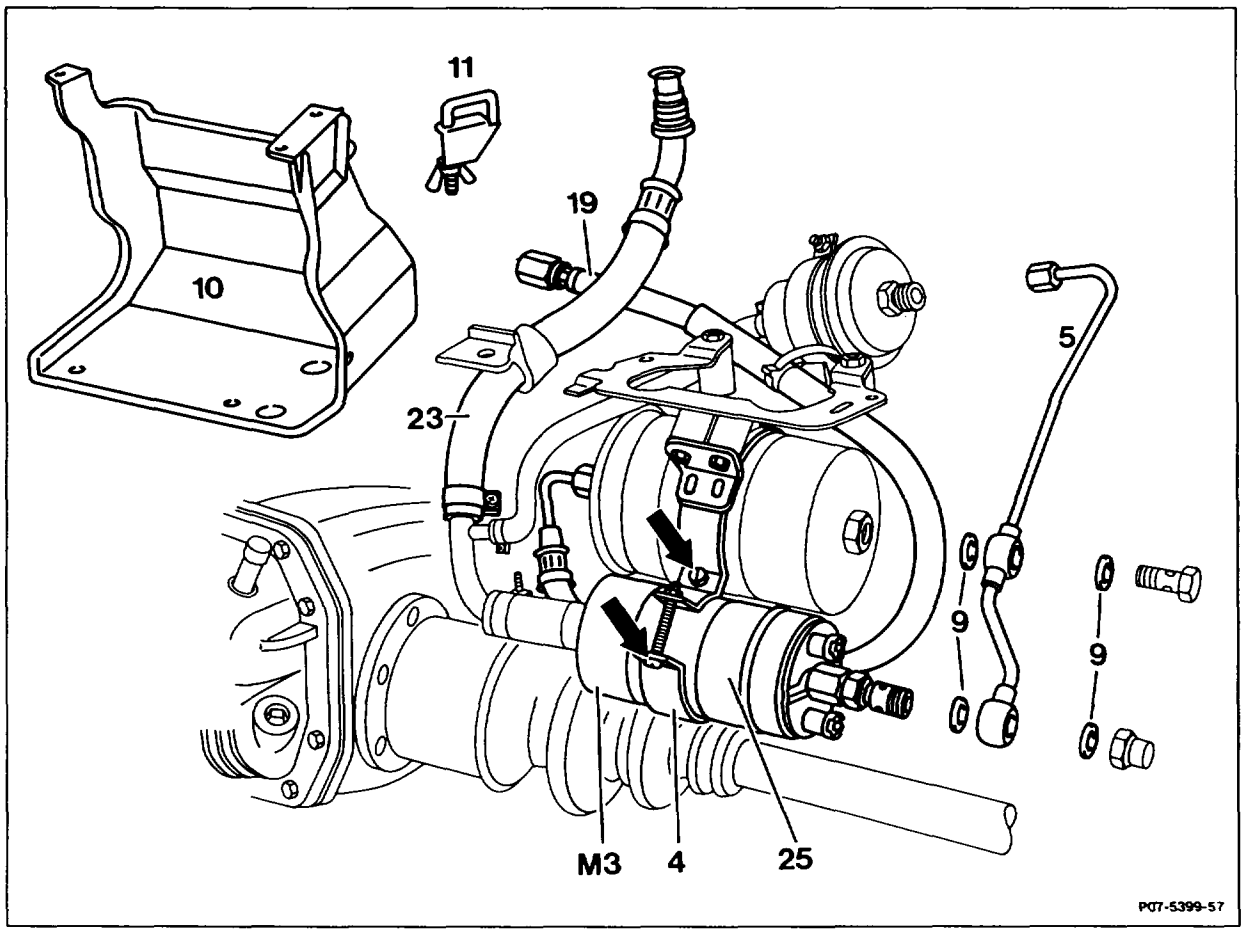

Models 107, 126

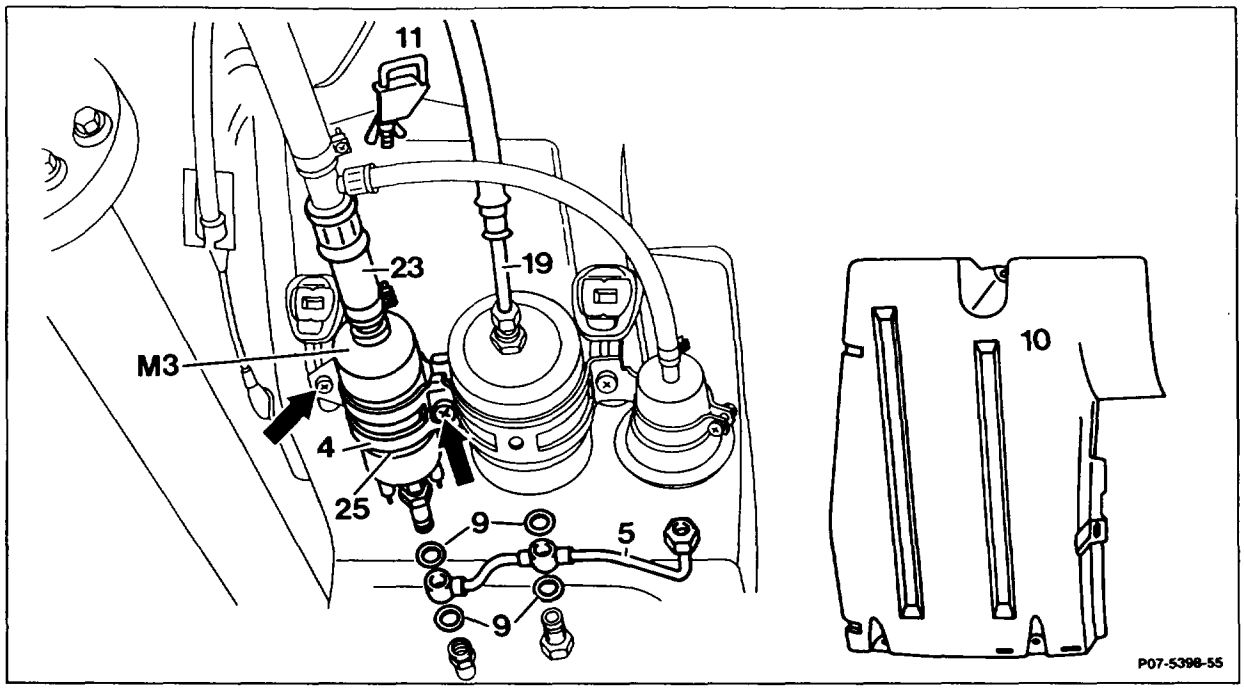

Model 124

Pressure in fuel tank	release by opening cap, close.
Ground cable at battery	disconnect, connect.
Protective box (10)	unscrew, screw on.
Fuel suction hose and fuel pressure hose (23, 19)	pinch off with clamp (11). Special tool 000 589 40 37 00. For model 124.090 pay attention to note.
Fuel line (5)	at fuel accumulator, fuel pump and fuel filter, unscrew, screw on.
Fuel suction hose (23)	slacken, pull off, fit on.
Electric cables	disconnect, connect.
Securing screws (arrows)	at holder (4) slacken, tighten.
Fuel pump (M3)	remove, insert.

Plastic sleeve (25)	install.

Note
When exchanging the fuel filter, it is essential to ensure that the plastic sleeve (25) is installed between fuel filter and holder (4). It must project on both sides of the holder as direct contact of the fuel filter with the holder can cause contact corrosion.
The fuel pump is actuated by the fuel pump relay (07.3–5792).

Seals (9)	replace.
Leaktightness of all connection points	check with engine running.

Special tool

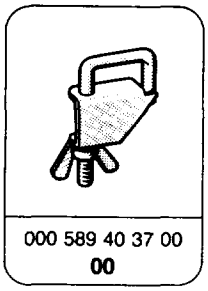

000 589 40 37 00
00

Note
Engine 103.983, model 124.090
Do not pinch off fuel suction hose at elbow (arrow).

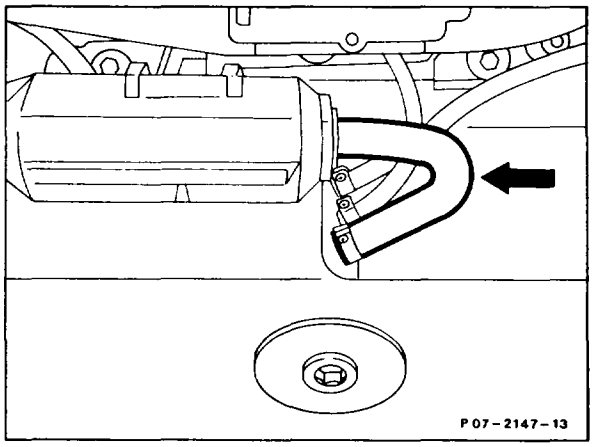

B. Fuel pump set with two fuel pumps

a) Model 124

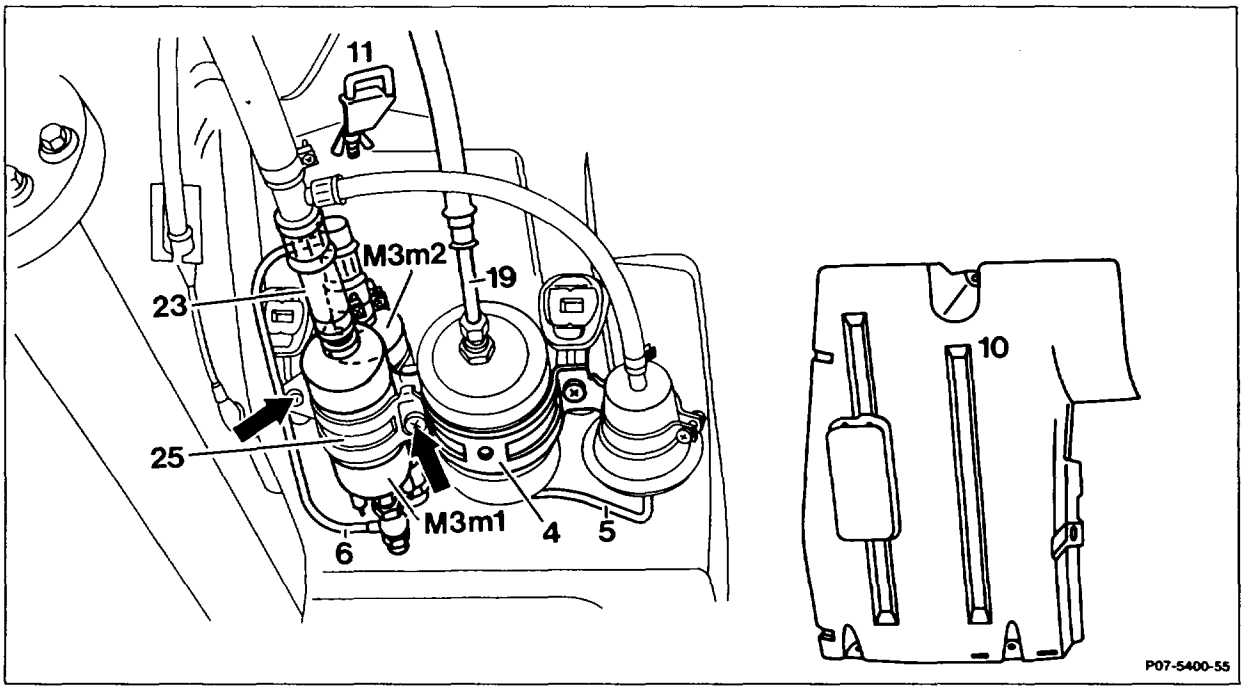

Pressure in fuel tank	release by opening cap, closing.
Ground cable at battery	disconnect, connect.
Protective box (19)	unscrew, screw on.
Fuel suction hose and fuel pressure hose (19, 23)	pinch off with clamp (11). Special tool 000 589 40 37 00.
Fuel pump 1 (M3m1)	remove, install.
Fuel line (6) to fuel pump 2 (M3m2)	unscrew, screw on.
	Note Replace copper seal.
Electric cables	disconnect, connect.
Hose clip and fuel suction line	slacken and pull off fuel line (6).
Securing screws (arrows)	slacken and take out fuel pump.

Fuel pump 2 (M3m2)	remove, install.
Fuel line (5)	between fuel pump, fuel filter and fuel accumulator, remove, install.
	Note Replace copper seals.
Electric cables	disconnect, connect.
Securing screws (arrows)	at holder (4) slacken and take out fuel pump, press fuel hose off fuel pump 1 (M3m1) when performing this step.
Plastic sleeve (25)	install.
	Note When exchanging the fuel filter, it is essential to ensure that the plastic sleeve (25) is installed between fuel filters (M3m1 and M3m2) and holder (4). It must project on both sides of the holder as direct contact of the fuel filter with the holder can cause contact corrosion.
Leaktightness	check with engine running.

Special tool

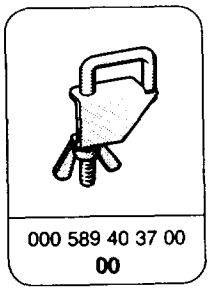

000 589 40 37 00
00

Fuel pump set
Model 124.090, engine 103.983

Two fuel pumps are arranged in series on this model.
To achieve short suction distances, a fuel pump is suspended on rubber rings between rear axle and fuel tank. The second fuel pump is installed in the fuel pump set.

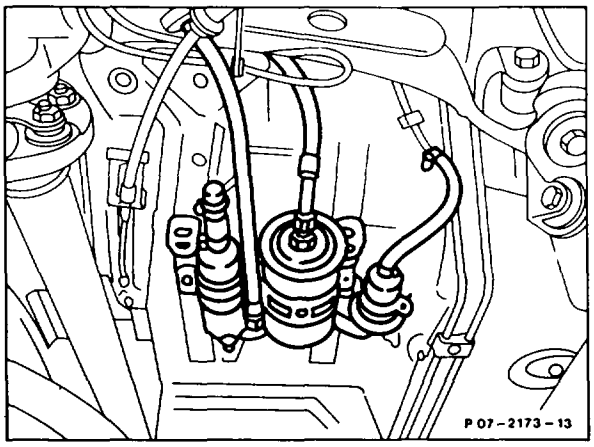

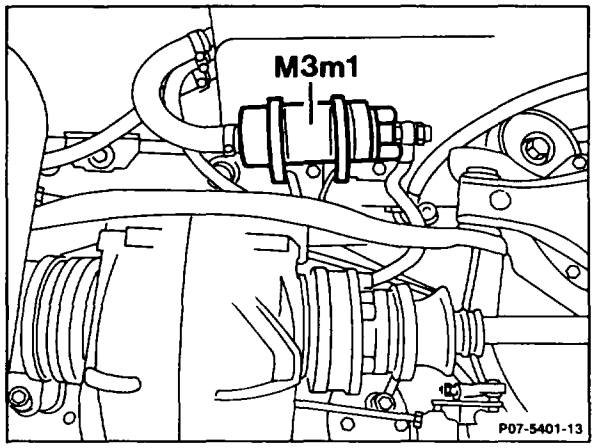

Note
Model 124 Sedan and Coupé
Fuel suction hose from fuel tank to fuel pump converted to shaped hose in order to avoid kinking (as of vehicle ident end no. B 097367).

b) Model 129

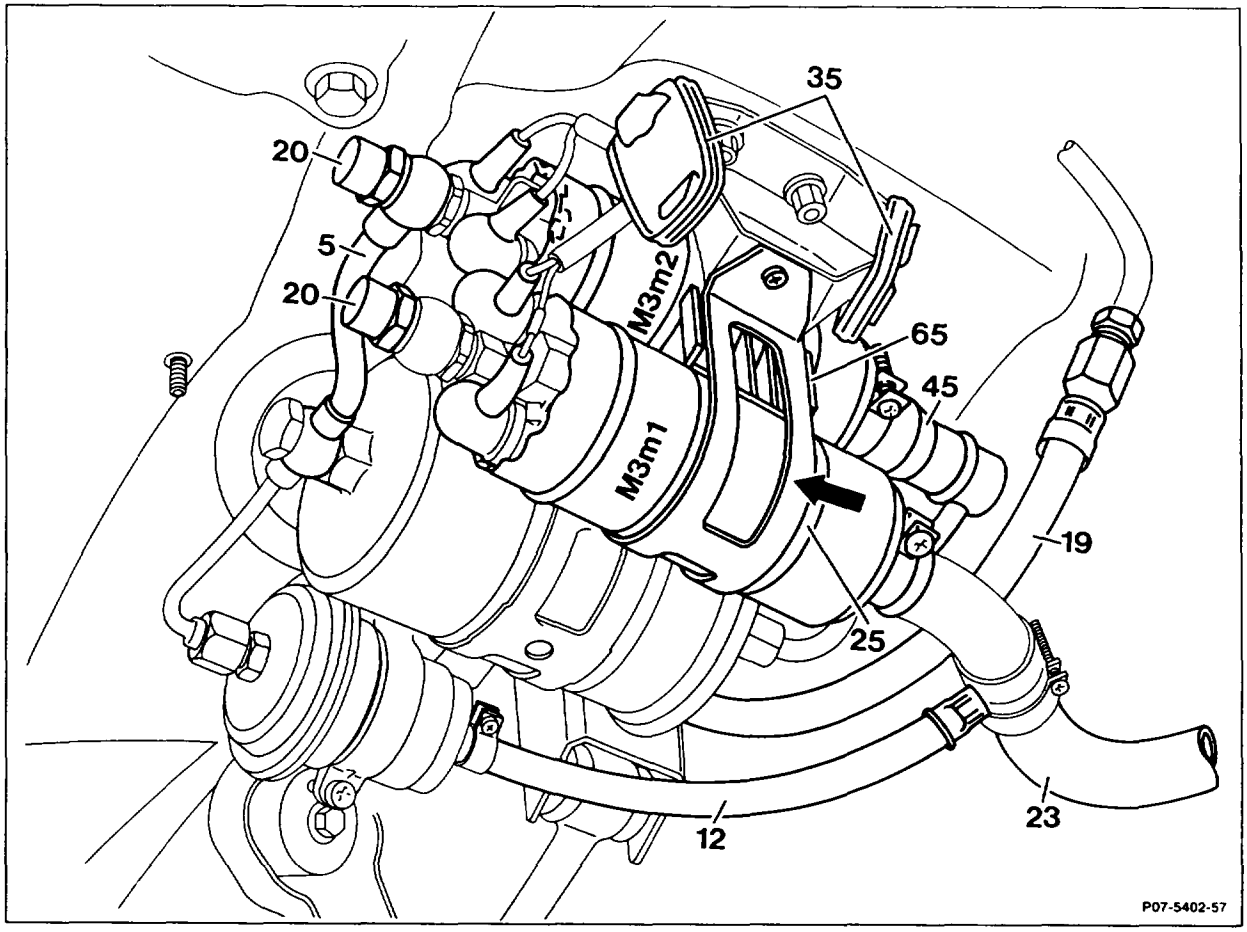

Removing and installing fuel pump 1 (M3m1)

Pressure in fuel tank	release by opening cap, close.
Ground cable at battery	disconnect, connect.
Protective box	unscrew, screw on.
Fuel suction hose and fuel pressure hose (19, 23)	pinch off with clamp. Special tool 000 589 40 37 00.
Fuel hose (23)	disconnect, connect.
Union nut (20)	unscrew, screw on. Replace seals.
Electrical connections	disconnect at fuel pump (M3m1), connect.
Tensioning strap (arrow)	open, close.

Fuel pump 1 (M3m1)	remove, insert. If necessary, replace plastic sleeve (25).
	Note When exchanging the fuel filter, it is essential to ensure that the plastic sleeve (25) is installed between fuel filters and holder (2). It must project on both sides of the holder as direct contact of the fuel filter with the holder can cause contact corrosion.
Leaktightness of all connection points	check with engine running.

Removing and installing fuel pump 2 (M3m2)

Fuel pump 1 (M3m1) must be removed beforehand in order to remove fuel pump 2 (M3m2).

Pressure in fuel tank	release by opening cap, close.
Ground cable at battery	disconnect, connect.
Protective box	unscrew, screw on.
Fuel pump set	lower on fuel pump side by detaching the two rubber rings (35).
Union nut	unscrew, screw on. Replace seals.
Electrical connections	disconnect at fuel pump (M3m2), connect.
Spacer adapter (65)	remove, install.

Fuel pump M3m2	remove, insert. Replace plastic sleeve (25) if necessary.
	Note When exchanging the fuel filter, it is essential to ensure that the plastic sleeve (25) is installed between fuel filters and holder (2). It must project on both sides of the holder as direct contact of the fuel filter with the holder can cause contact corrosion.
Leaktightness of all connection points	check with engine running.

Special tool

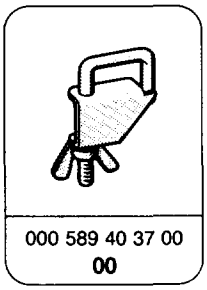

000 589 40 37 00
00

C. Retrofitting bracket for fuel hose in rear axle area (model 124.090)

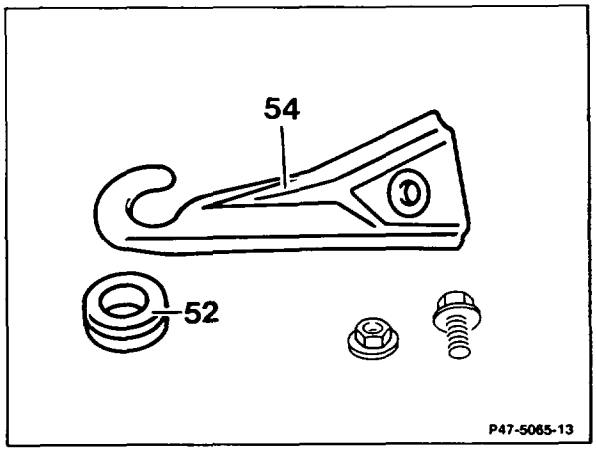

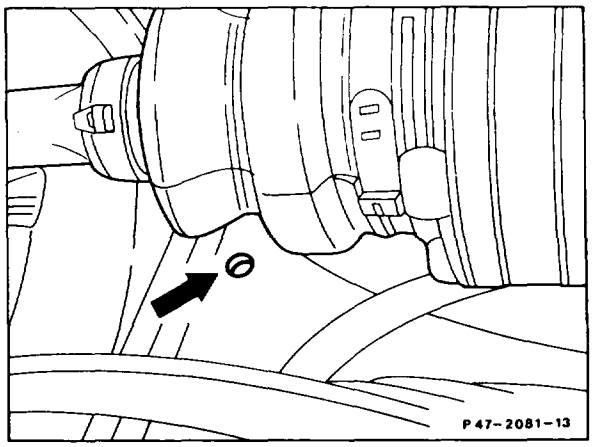

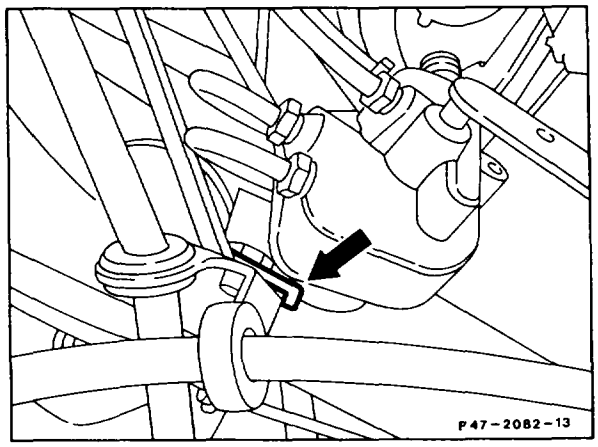

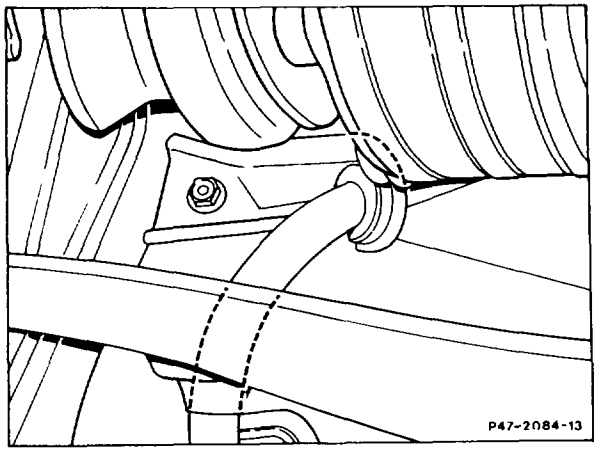

Note

On these vehicles an additional holder for the fuel pressure hose must be attached to the cross beam of the rear axle carrier. This ensures that the fuel pressure hose is held at the correct distance to the inner ring joint of the right rear axle shaft.

Ground cable at battery	disconnect, connect.
Protective box for pump set	detach, attach.
Fuel pressure hose in front of protective box for pump set	pinch off with clamp. Special tool 000 589 40 37 00.
Fuel pressure hose	disconnect at fuel pump, connect.

Fuel pressure hose	pull through the cross beam of rear axle carrier. If necessary, replace fuel pressure hose. To do this, take off protective box at pump set.
Rubber grommet (52)	push onto fuel pressure hose.
Holder at existing hole of cross beam of rear axle carrier (arrow)	attach.
Fuel pressure hose	pull through rear axle carrier and install with new gaskets at fuel pump.
Clearance between fuel pressure hose and ring joint (approx. 30 mm)	check. If necessary, bend holder (54) up.
On vehicles with ABS	check that holder is correctly installed. The locating lugs (arrow) must not be resting on the counter-holder.
Fuel pressure hose with rubber grommet	attach to holder.
Leaktightness of all connection points	check with engine running.

Vehicles affected

Model	Up to vehicle ident end no.
124.090	F 011 879

Parts

Designation	Part no.
Fuel pressure hose	124 470 19 75
Holder	124 471 03 41
Nut	913017 00600
Bolt	914126 006005
Rubber grommet	116 997 29 81

Notes

Models 107, 124, 126

Installation of fuel pumps with shaped track.

Identification: Bosch production date as of 642.

Production breakpoint: a) fuel pump 002 091 88 01 (EKP 6) February 1986

Model	Engine	Vehicle ident end no.
126.020	103.941	A 239728
126.024/025	103.981	A 239725

Production breakpoint: b) fuel pumps 002 091 97 01 (EKP 4) March 1986

Model	Engine	Vehicle ident end no.
107.041	103.982	A 046830
124.026	103.940	A 214628
124.030	103.983	A 214834
124.090	103.983	F 002929

Models 124, 201

Installation of second fuel pump.

Prevents formation of vapour bubbles.

Production breakpoint: September 1986

Model	Engine	Vehicle ident end no.
201.029	103.942	A 326940

Production breakpoint: November 1986

Model	Engine	Vehicle ident end no.
124.026	103.940	A 368937
124.030	103.983	A 368937

07.3–5770 Removing and installing fuel pump set

Operation no. of operation texts and work units or standard texts and flat rates:
07–5770.

A. Models 107, 124, 126, 201

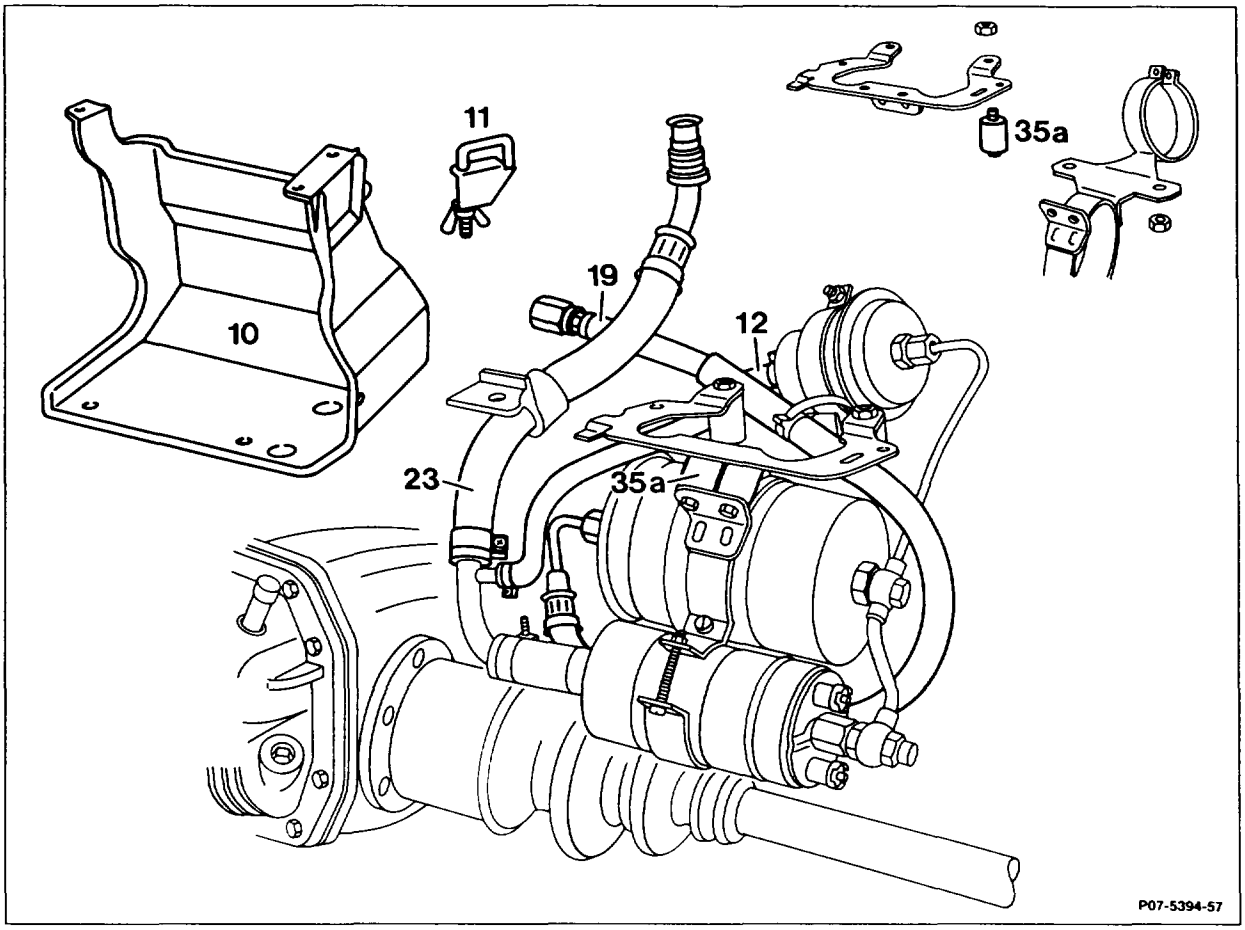

Models 107, 126: fuel pump set with one fuel pump

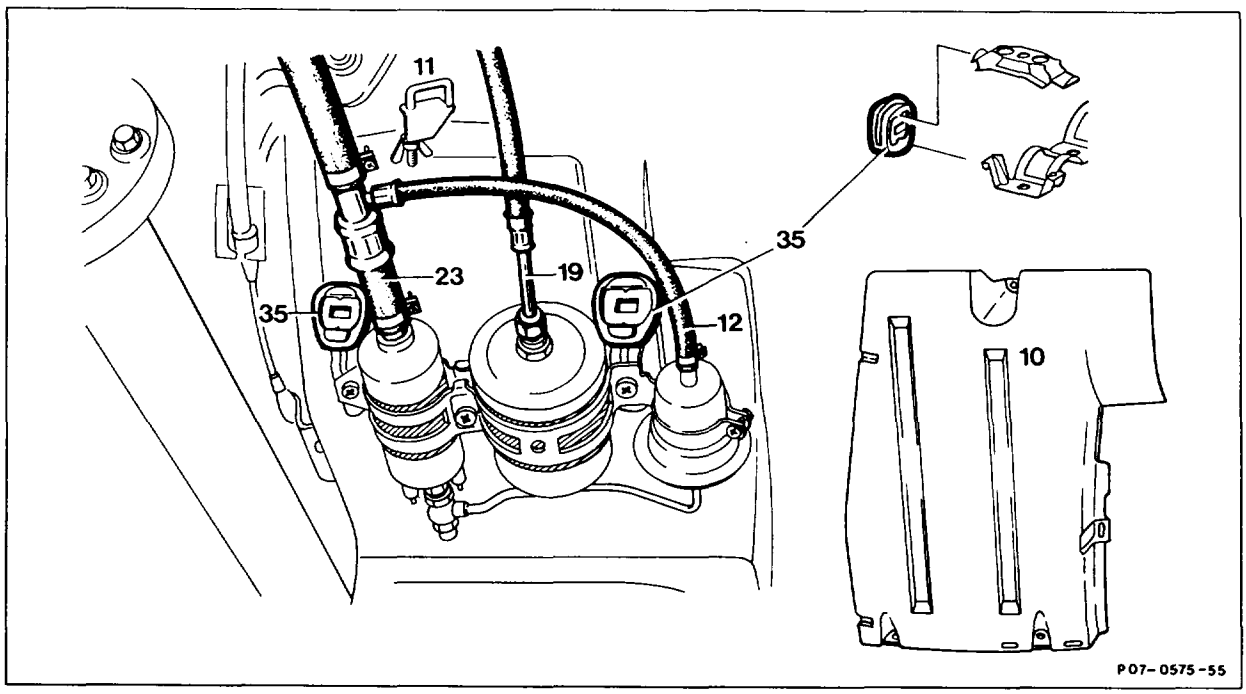

Model 124: fuel pump set with one fuel pump

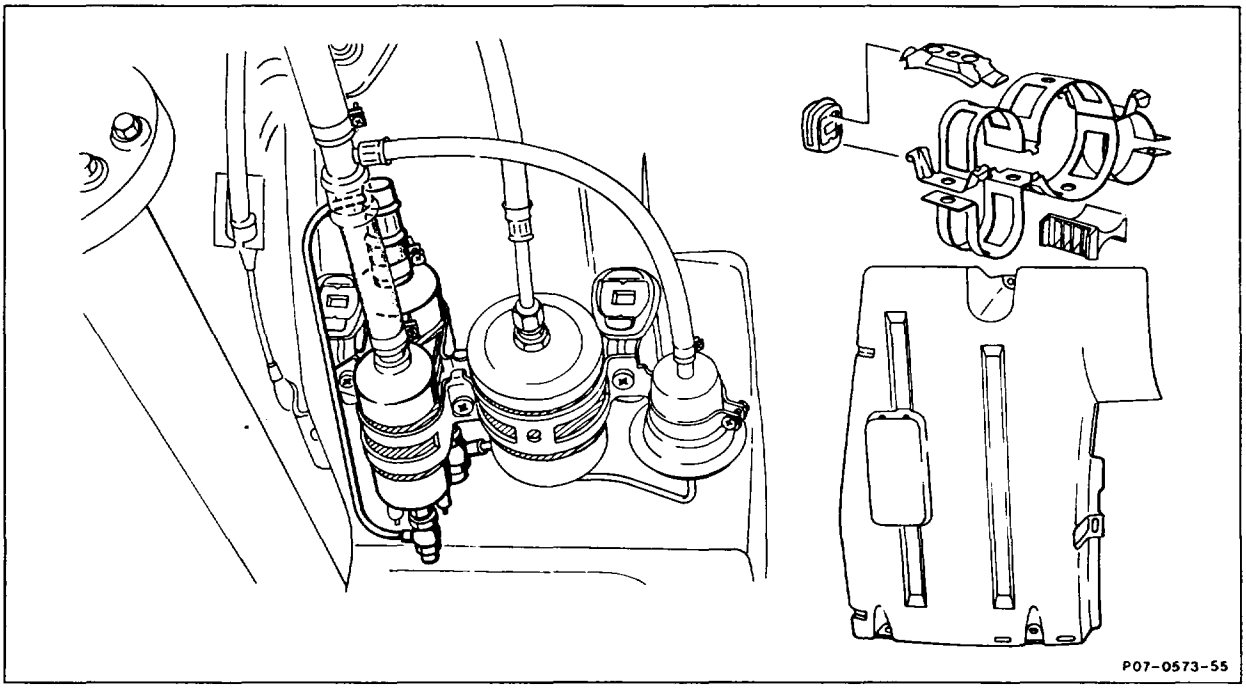

Models 124, 129: fuel pump set with two fuel pumps

Pressure in fuel tank	release by opening cap, close.
Ground cable at battery	disconnect, connect.
Protective box (10)	unscrew, screw on.
Electric cables	disconnect, connect.
Fuel suction hose and fuel pressure hose (19, 23)	pinch off with clamp (11). Special tool 000 589 40 37 00.
Fuel suction hose, fuel pressure hose and leak hose (19, 23, 12)	unscrew, screw on. For model 124.090 pay attention to note (07.3–5710).
Rubber rings (35) or rubber stop (35a)	remove, install, pay attention to plastic clip for electric cable (risk of fracturing).

Special tool

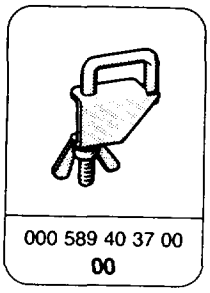

000 589 40 37 00
00

Note

Model 124

Improvement in noise insulation by modified routing and longer pressure hose with holder (arrows, Fig B, only double pump version shown) from fuel filter to fuel delivery line.

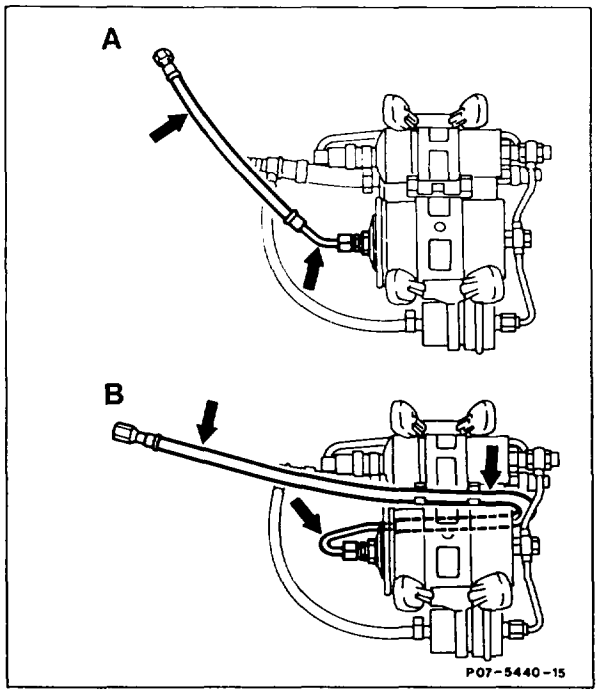

Production breakpoint: October 1988

Model	Engine	Vehicle ident end no. A
124.026	103.940	872851
124.030/050	103.983	872851
124.226	103.943	872851
124.230	103.985	872851

B. Model 129

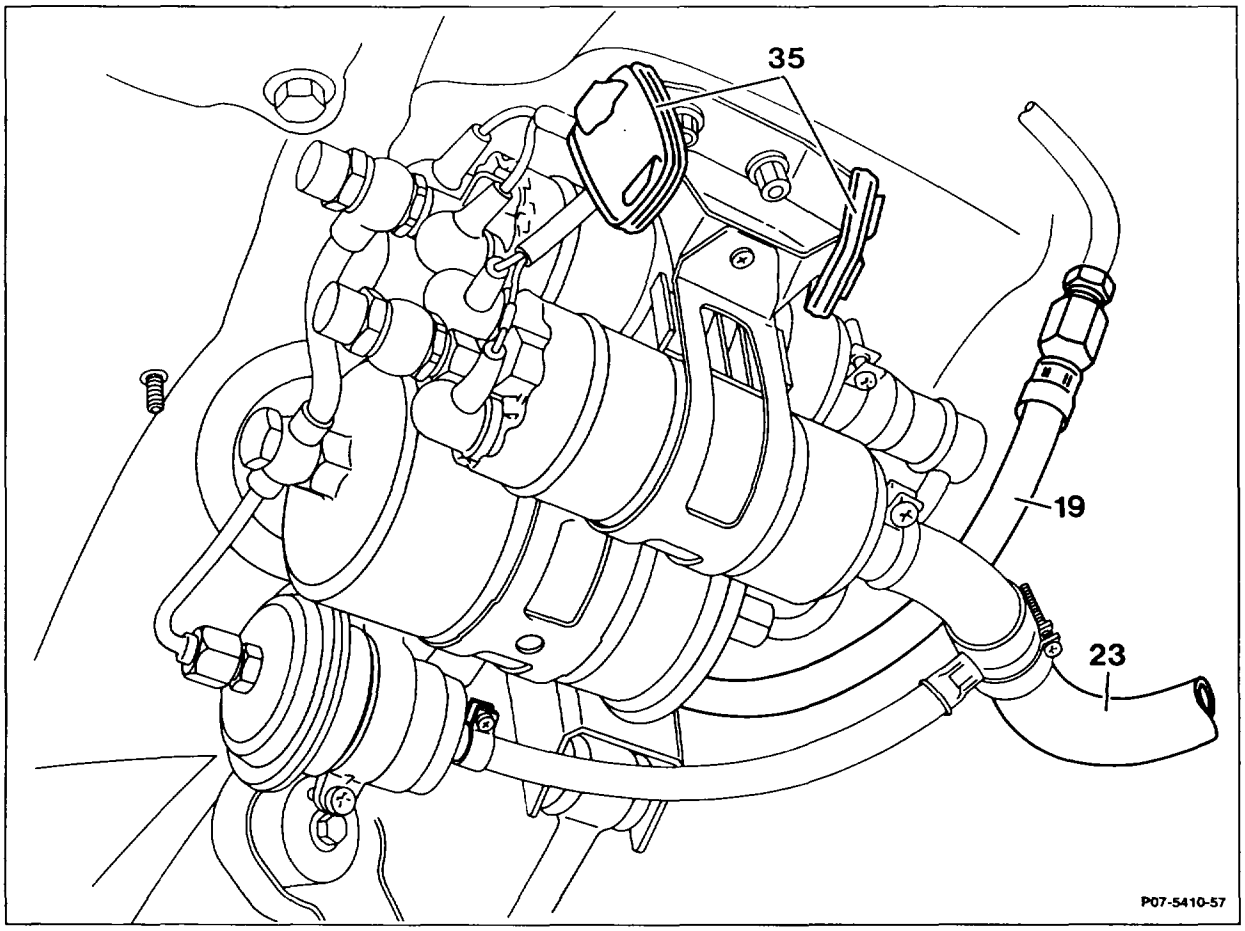

Rear bench seat	(if fitted) remove, install. Open flap behind front passenger seat, close. Remove the plastic cover located below, install.
Electrical coupling (see note)	for fuel pump set, separate, connect.
Cover for fuel pump set	unscrew, screw on.
Fuel suction hose and fuel pressure hose (19, 23)	pinch off with clamp 000 589 40 37 00, disconnect and connect.
Rubber rings (35)	detach, attach.
Leaktightness of all connection points	check with engine running.

Special tool

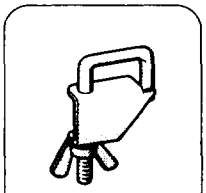

000 589 40 37 00
00

Note

Location of electric coupling (arrow) for fuel pumps.

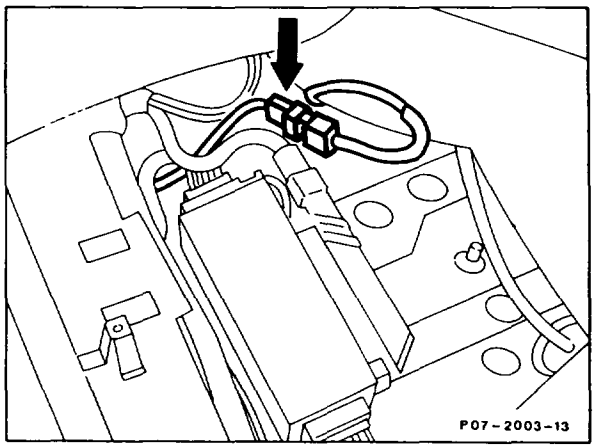

07.3-5792 Testing fuel pump relays (except engine 103.984 and (USA) (J) as of model year 1990)

Operation no. of operation texts and work units or standard texts and flat rates:
07-5792.

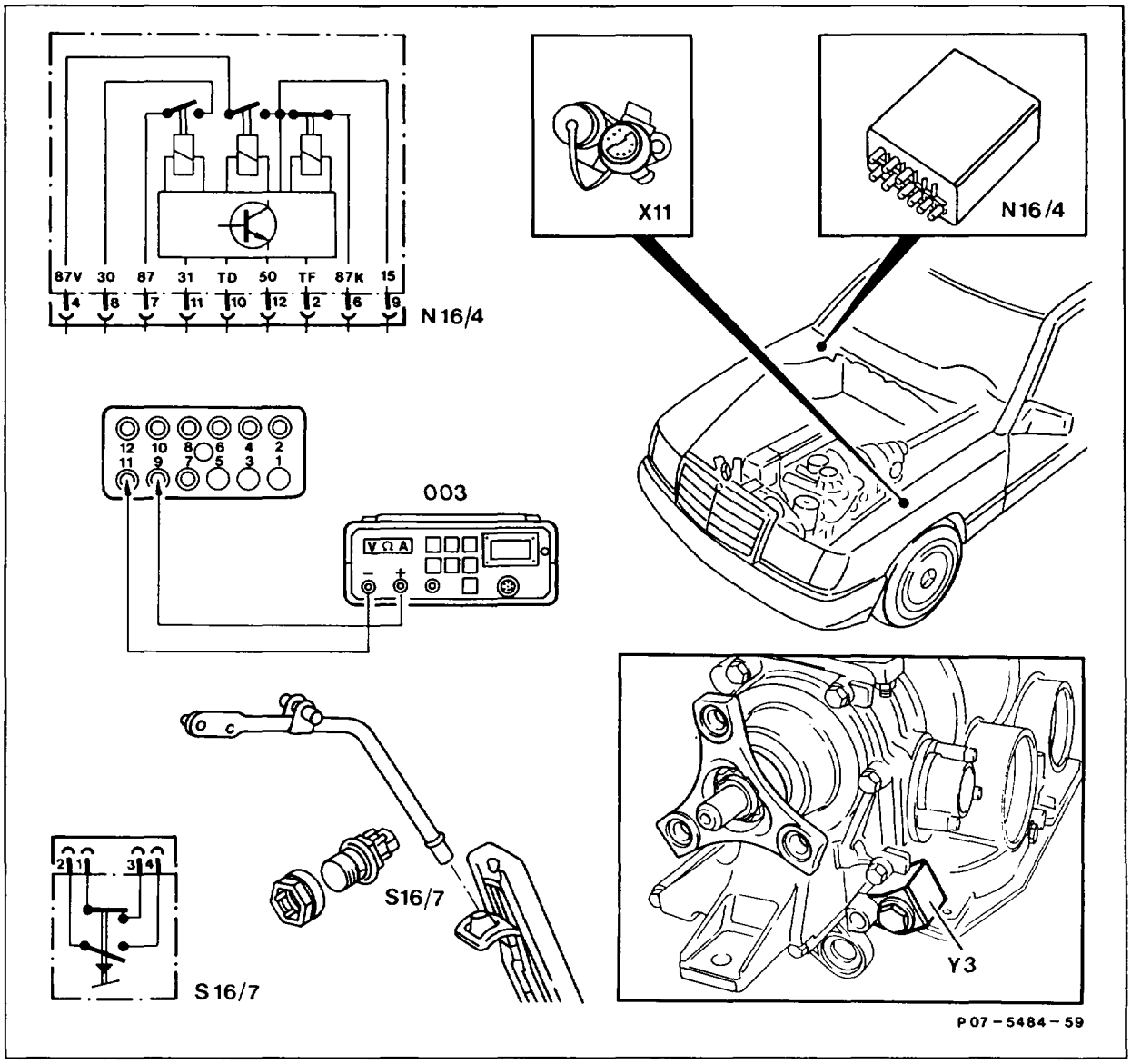

003	Multimeter	S16/7	Kickdown switch
N16/4	Fuel pump relays	X11	Diagnostic socket/terminal block terminal TD/TN
		Y3	Kickdown valve, automatic transmission

Commercially available tools and testers (see Workshop Equipment Manual)

Designation	e.g. Make, order no.
Multimeter	Sun, DMM-5

Symbols for testers

Multimeter

Bridge

Socket

Connector

Symbols for test mode with multimeter

Multimeter
DC voltage mode

Multimeter
Resistance mode

Note

If the specification of e.g. step 1.0 is in order, it is not necessary to perform 1.1.
See appropriate wiring diagram volume for wiring diagrams.

Test step	Test scope	Test connection	Operation/ Requirement	Specification	Possible cause/Remedy
1.0	Fuel pump relay (N16/4) [1]	N16/4 [1]) 7 — 8	Remove fuel pump relay (N16/4) [1]	Fuel pump runs	Fuse F1, Fuel pump (M3m1 or M3m2), Open circuit in wiring
1.1		N16/4 [1]) 11 — 9	Remove fuel pump relay (N16/4) Ignition: **ON**	11–14 V	Open circuit in wiring
1.2		N16/4 [1]) 11 — 10	Remove fuel pump relay (N16/4) Ignition: **ON** Engine: **start**	≥ 10 V	Open circuit in wiring, Test EZL ignition control unit (N1/2)

[1]) Test step/test scope for fuel pump relays (N16/1 to N16/4) identical.

Test step	Test scope	Test connection	Operation/ Requirement	Specification	Possible cause/Remedy
1.3		N16/4 11 — (V) — 8	Ignition: **OFF** Remove fuel pump relay	11–14 V	Open circuit in wiring
1.4		Install fuel pump relay (N16/4) [1]	Ignition: **ON**	Fuel pump briefly runs	Replace fuel pump relay (N16/4) [1]
2.0	Kickdown shutoff	With selection program: S16/7 ⊥ — (V) — 2	Unplug coupling from kickdown switch (S16/6) or (S16/7) Ignition: **ON** Engine: **start**	11–14 V	Rectify open circuit according to wiring diagram
		Without selection program: (AUS) (J) (USA) S16/6 ⊥ — (V) — 1		11–14 V	Rectify open circuit according to wiring diagram

[1]) Test step/test scope for fuel pump relays (N16/1 to N16/4) identical.

Test step	Test scope	Test connection	Operation/ Requirement	Specification	Possible cause/Remedy
2.1		With selection program: 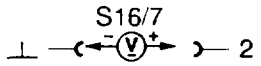 W/o selection program: AUS J USA 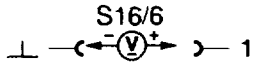 	Ignition: **ON** Engine: **start**	11–14 V 11–14 V	Open circuit in wiring
2.2		With selection program: 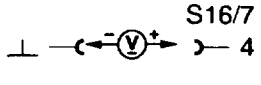 W/o selection program: AUS J USA 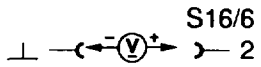 	Increase engine speed	Voltage must drop approx. 200/min before governed speed reached	Replace fuel pump relay
2.3	Kickdown switch	With selection program: 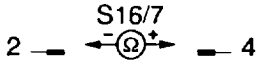 Without selection program: AUS J USA 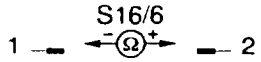 	Ignition: **OFF** Kickdown switch operated Kickdown switch not operated	 0 Ω ∞	 Replace kickdown switch

Test step	Test scope	Test connection	Operation/ Requirement	Specification	Possible cause/Remedy
2.4	Solenoid valve (Y3)	Unplug coupling from solenoid valve (Y3) ⊥ -(V)+ Y3	Operate kickdown switch by hand	11–14 V	Replace solenoid valve

Fuel pump relay test connection (N16/4)

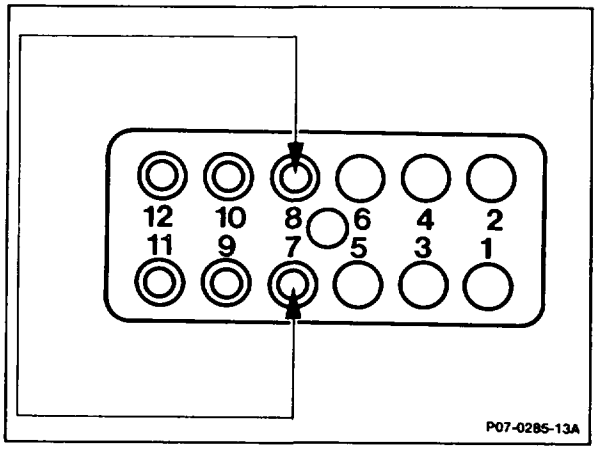

Arrangement of kickdown valve (Y3)

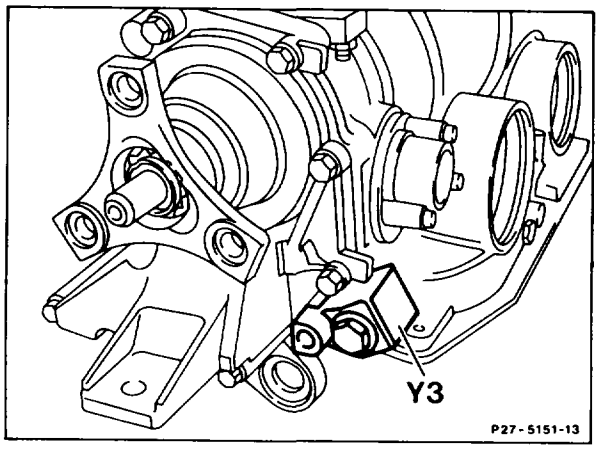

Y3 Kickdown valve, automatic transmission

Note

If the engine is not governed when top speed is reached, replace fuel pump relay.
The governed speed for the engine is stamped on the fuel pump relay.
Test start valve actuation, see 07.3–1607.

Engine 103.984 and (USA) (J) as of model year 1990 with engine systems control unit MAS (without fuel pump relay): test, see 07.3–1121 A, Sections e and j or B, Sections i and m.

The function in the fuel pump relay has been supplemented as 09/89 in two stages by a separate oxygen sensor cable.

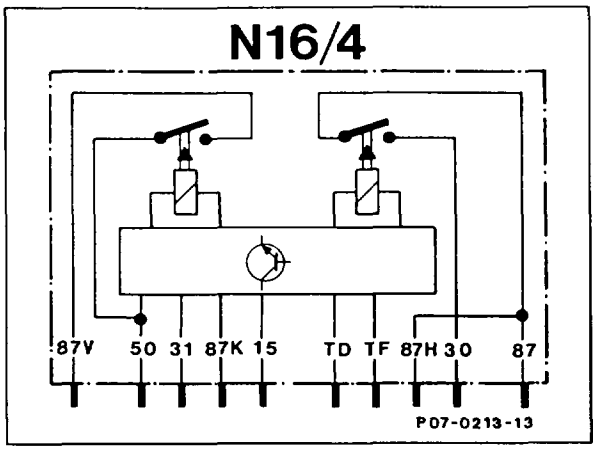

Version 09/89 up to approx. 12/89

The fuel pump relay is provided with an additional connector for the oxygen sensor heater with the designation 87H.
This also results in modification of the cable assignment at the relay. Actuation is performed as before as the additional connector 87H is connected as before via a bridge to the connector of designation 87.

Version as of 01/90

From this date the bridge between terminals 87 and 87H has been eliminated.
This has resulted in a modification in the electronic circuitry in the relay. The cut-in temperature for the oxygen sensor heater is +20 °C and is determined by the coolant temperature sensor

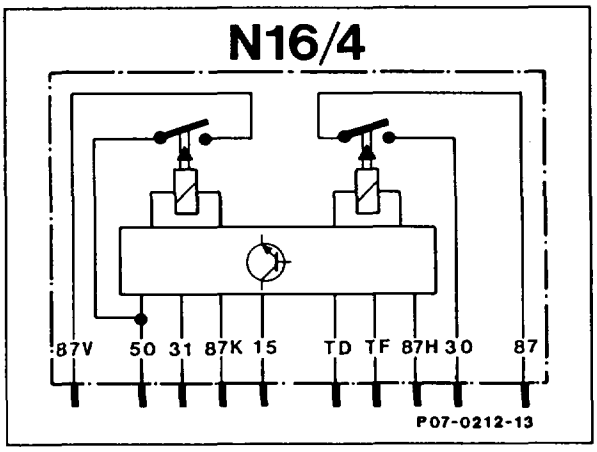

Fuel pump relay engine 103

Version	up to 08/88	09/88 – 08/89	09/89 – 12/89	01/90 –
automatic transmission	002 545 52 05	002 545 92 05	003 545 17 05	003 545 24 05
manual transmission	002 545 51 05	002 545 93 05	003 545 16 05	003 545 23 05

Note

Fuel pump relay

Models 107, 124, 126, 201

Modifications:

- Governed speed 6450/min (previously 6650/min).
- Actuation of cold start valve +60°C (previously +15°C), cold start properties improved.

Production breakpoint

Model	Engine	Month/ year	Vehicle ident end no. Manual transmission A	Vehicle ident end no. Automatic transmission A	Vehicle ident end no. Automatic transmission F
107.041	103.982	10/88 01/89	095202 –	– 098340	– –
124.026/030	103.940/983	10/88 11/88	866321 –	– 905796	– –
124.050	103.983	09/88 10/88	863710 –	– 880789	– –
124.090	103.983	09/88 06/88 (USA)	– –	– –	087456 081421
124.226/230	103.943/985	10/88 11/88	866321 –	– 905796	– –
124.290	103.985	09/88	–	–	087456
126.020/024/025	103.981	10/88 02/89	440990 –	– 462906	– –
201.029	103.942	10/88 07/88	460383 –	460383 –	– 522661

07.3–5820 Replacing non-return valve for fuel pump

Operation no. of operation texts and work units or standard texts and flat rates:
07–5820, 07–5821.

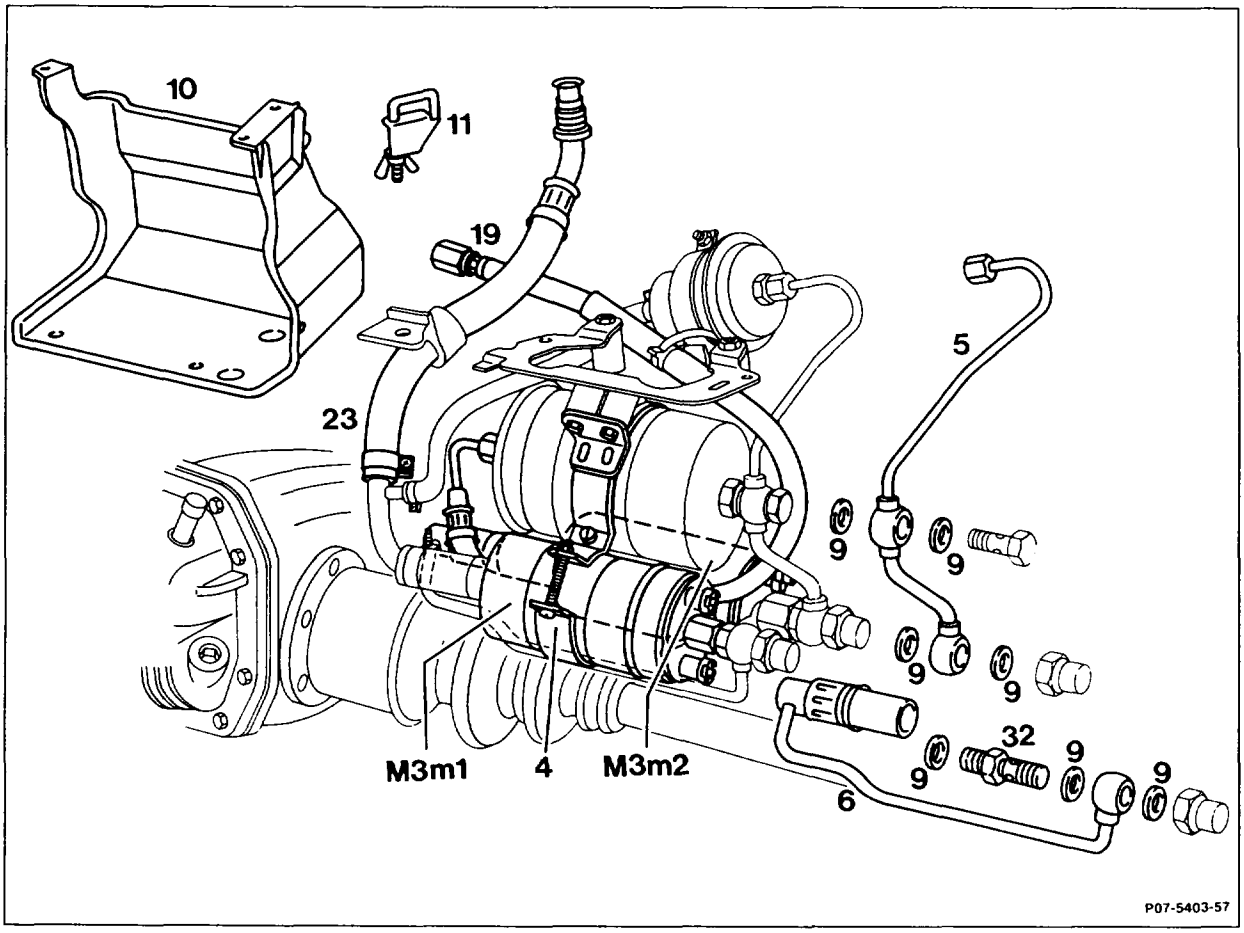

Pressure in fuel tank	release by opening cap, close.
Ground cable at battery	disconnect, connect.
Protective box (10)	unscrew, screw on.
Fuel suction hose and fuel pressure hose (19, 23)	pinch off with clamp (11). Special tool 000 589 40 37 00.
Fuel suction hose (23)	slacken and pull off.

Replacing non-return valve on fuel pump 1 (M3m1):

Securing bolt at holder (4)	for fuel pump, slacken, tighten.
	Note When tightening the securing bolt at holder (4), it is essential to ensure that the plastic sleeve must project on both sides of the holder as direct contact of the fuel filter with the holder can cause contact corrosion.
Fuel pipe (6)	unscrew, screw on.
Cap nut	unscrew, screw on.
Fuel pump 1 (M3m1)	push to the left.
Non-return valve (32)	remove, install. Tightening torque 22 Nm.
Copper seals (9)	replace.
Leaktightness of all connection points	check with engine running.

Replacing non-return valve on fuel pump 2 (M3m2):

Fuel line (5)	between fuel pump, fuel filter and fuel accumulator, unscrew, screw on.
Cap not	unscrew, screw on.
Non-return valve (32)	remove, install. Tightening torque 22 Nm.
Copper seals (9)	replace.
Leaktightness of all connection points	check with engine running.

Special tool

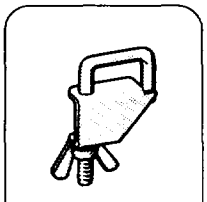

000 589 40 37 00
00

07.3–6210 Removing and installing throttle valve body

Operation no. of operation texts and work units or standard texts and flat rates:
07–6210.

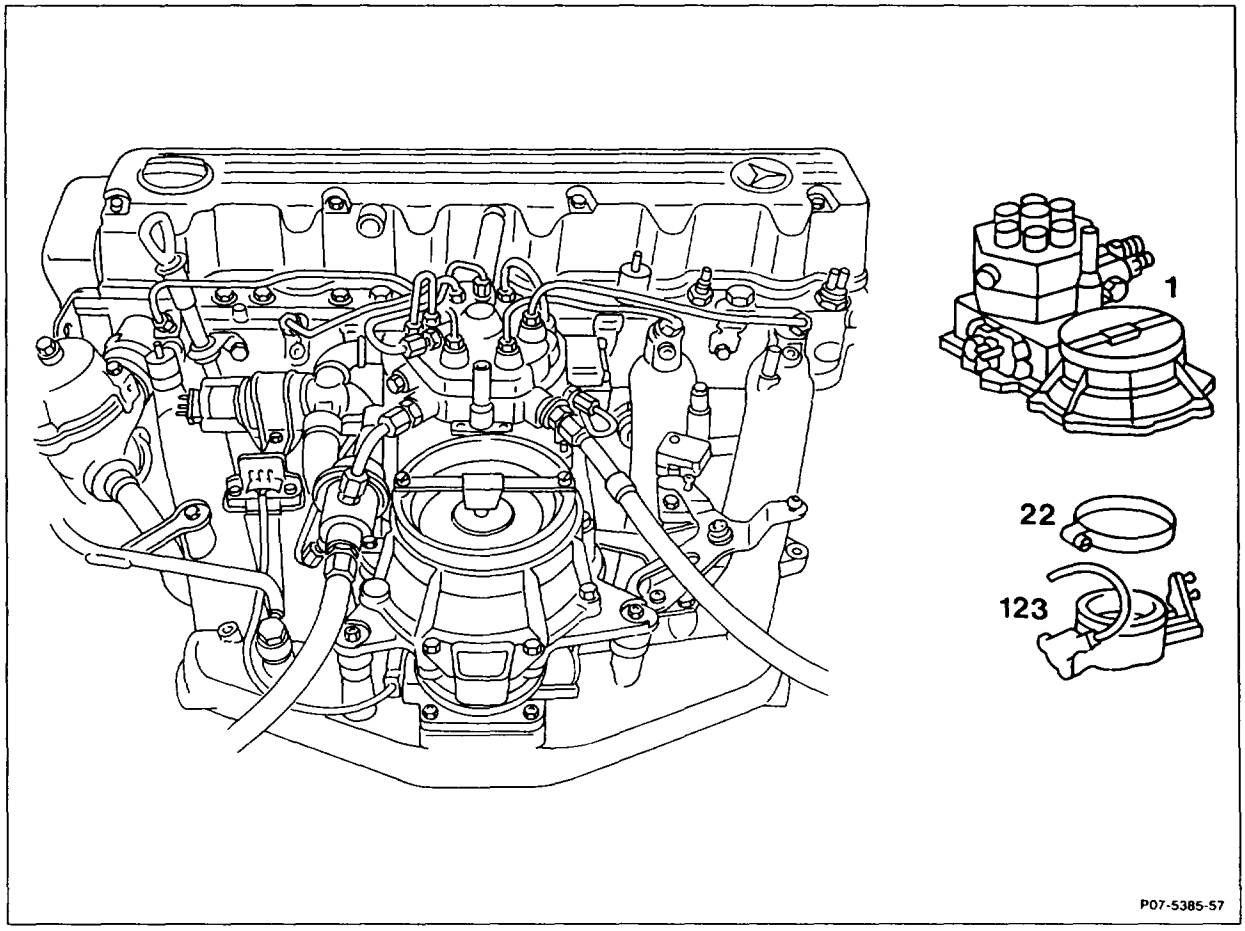

Hose clip (22)	slacken, tighten.
Mixture control unit (1)	remove, install (07.3–1668).
Return spring and accelerator control rod at throttle valve body	detach, attach.
Throttle valve body (123)	unscrew and take out. When installing, use new seal. Tightening torque 25–30 Nm as reference value.

Vacuum lines and electrical connection for throttle valve switch	disconnect, connect.
Fulcrum lever	adjust (30–1010).
Idle speed	adjust (07.3–2053).

Throttle valve body

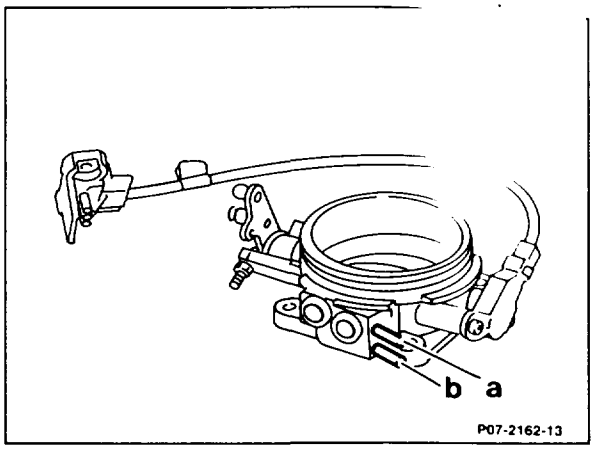

a To thermovalve
b Extraction line connection to regeneration valve for fuel evaporation control system

Throttle valve body, model 129
With 3 vacuum connections

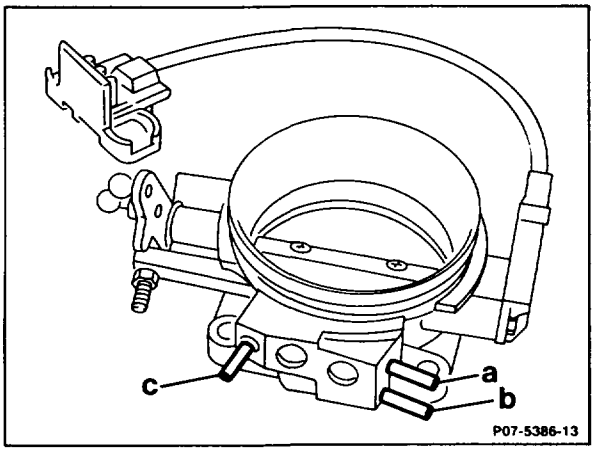

a Regeneration valve control line
b Regeneration line
c Exhaust gas recirculation control line

Notes
Model 129
Throttle valve body with manual and automatic transmission with improved throttle valve switch.

Production breakpoint: March 1990

Model	Engine	Engine end no. manual transmission	Engine end no. automatic transmission
129.060	103.984	000259	000966

Models 124, 126, 129, 201
Throttle valve body with automatic transmission and ASR with modified opening angle and improved throttle valve switch.

Production breakpoint: April 1990

Model	Engine	Engine end no. automatic transmission
124.026	103.940	082979
124.030/050/090	103.983	209949
126.020	103.941	015255
126.024/025	103.981	115904
129.060	103.984	001049
201.029	103.942	046790

Note
Throttle valve bodies which have to be replaced after a clear diagnosis, should be replaced in future only in combination with the throttle valve switch.

07.3–6500 Testing injection valves

Preceding work:
Removing and installing injection valves (07.3–6520).

Operation no. of operation texts and work units or standard texts and flat rates:
07–6500.

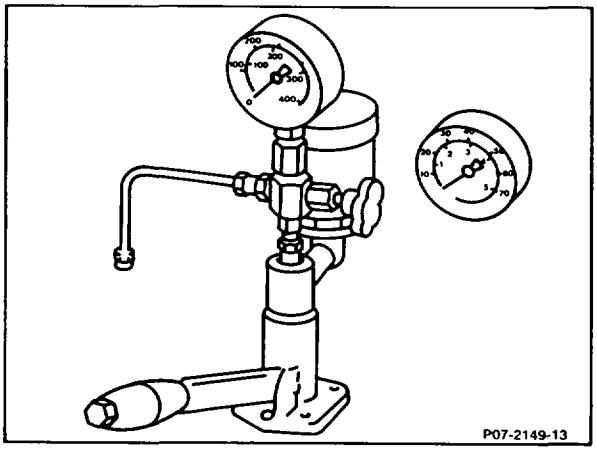

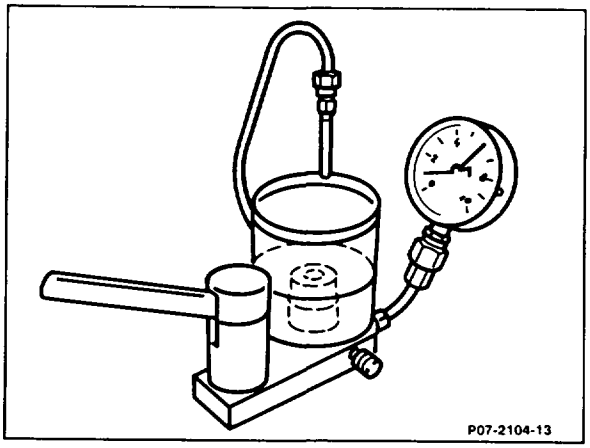

Injection valves	test.
Rough test of leaktightness	a) Connect removed injection valves to tester. Bleed pressure line with shutoff cock open and union nut open. Then, tighten union nut.
	b) Shutoff cock open, operate hand lever slowly (4s/stroke) and build up pressure to max. 1.5 bar. If a leak is found in the injection valve, the valve must be replaced.
Testing opening pressure	Opening pressure: new injection valves, see table of test data. Opening pressure: used injection valves, see table of test data. Close shutoff cock. Flush through injection valve by operating hand lever rapidly several times. Open shutoff cock and check opening pressure by moving hand lever slowly.

Fine test of leaktightness . . . . . close shutoff cock. Flush through injection valve by operating hand lever rapidly several times. Open shutoff cock and slowly increase pressure up to 0.5 bar below previously determined opening pressure and hold. No drop must form at the injection valve within 15 sec.

Chatter test, assessing spray . . . . . close shutoff cock and flush through valve by operating lever several times (0.5 s/stroke). Then, reduce lever speed to approx. 1 s/stroke. The valve must chatter when this is done. No drop must form at mouth of valve. No pencil-like spray must form. Single-sided, atomized spray pattern within a total spray angle of approx. 35° is permissible.
See figs for assessing spray.

Test data

Engine		103 up to 07/88	103 as of 08/88
Opening pressure of injection valves	New valves	3.5–4.1 bar	3.7–4.3 bar
	Used valves	at least 3.2 bar	at least 3.2 bar

Commercially available testers and accessories (see Workshop Equipment Manual)

Designation	e.g. Make, order no.
Bosch KDJE-P 400 valve tester	Bosch, KDJE-P 400
Nozzle tester EFEP 60 H [1])	Bosch, 0 684 200 700
0–6 bar pressure gauge, housing dia. 100 mm, quality class 1.0	Bosch, 1 687 231 000
Pipe	Bosch, 1 680 750 001

[1]) Corresponds to previous nozzle tester. For testing the injection valves, use the listed pressure gauge or the pressure gauge of pressure measuring device 100 589 13 21 00 .

Note
The nozzle or valve tester is used for testing the opening pressure, chatter, spray and leaktightness of the injection valves.
Before beginning with the test of the injection valves, the vessel of the tester must be filled and the tester bled. Use only petroleum for testing.

Replace injection valves which are not within the tolerance range.
The injection valves can be replaced individually within a set.

Assessing spray

Damaged injection valves

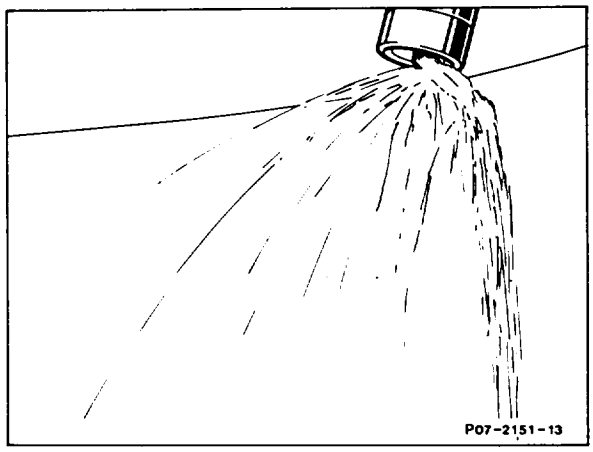

Formation of drops

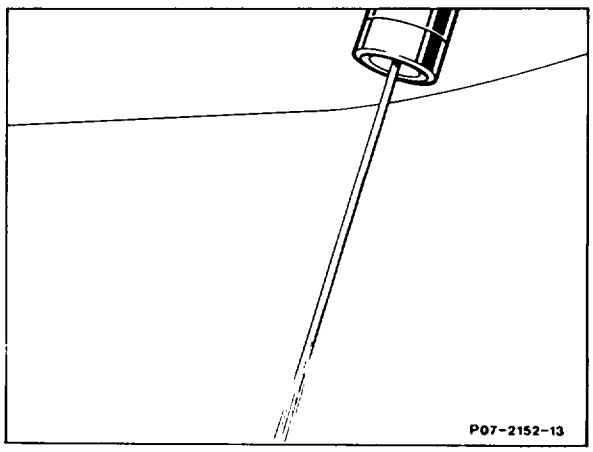

Pencil-like spray

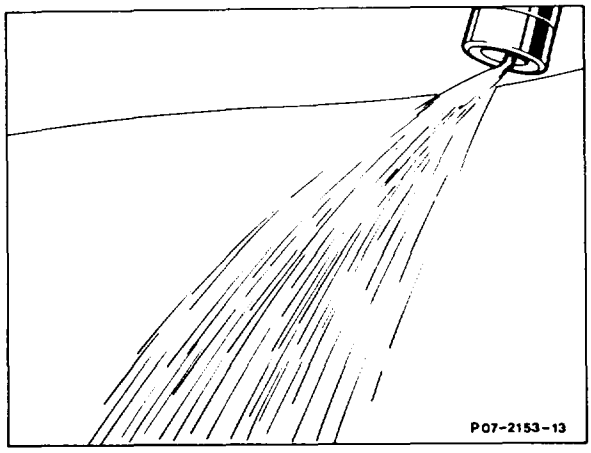

Stringy spray

Good injection valves

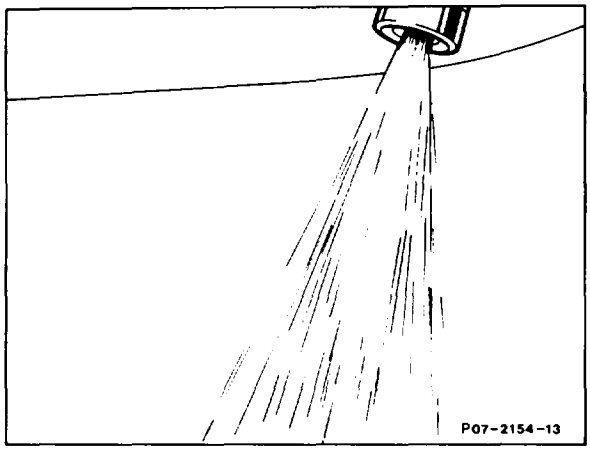

Good spray formation

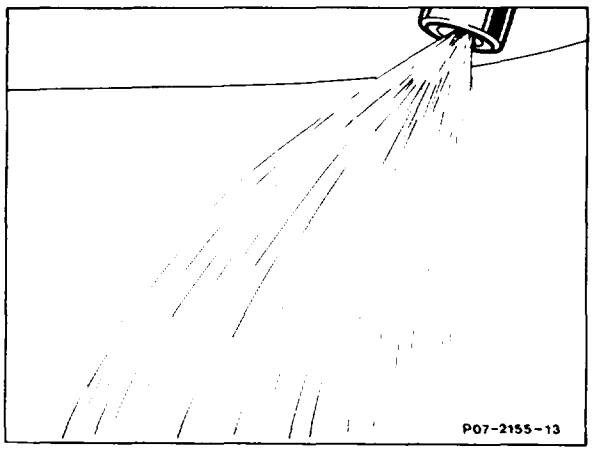

Slightly one-sided atomization

07.3–6520 Removing and installing injection valves

Operation no. of operation texts and work units or standard texts and flat rates:
07–6520.

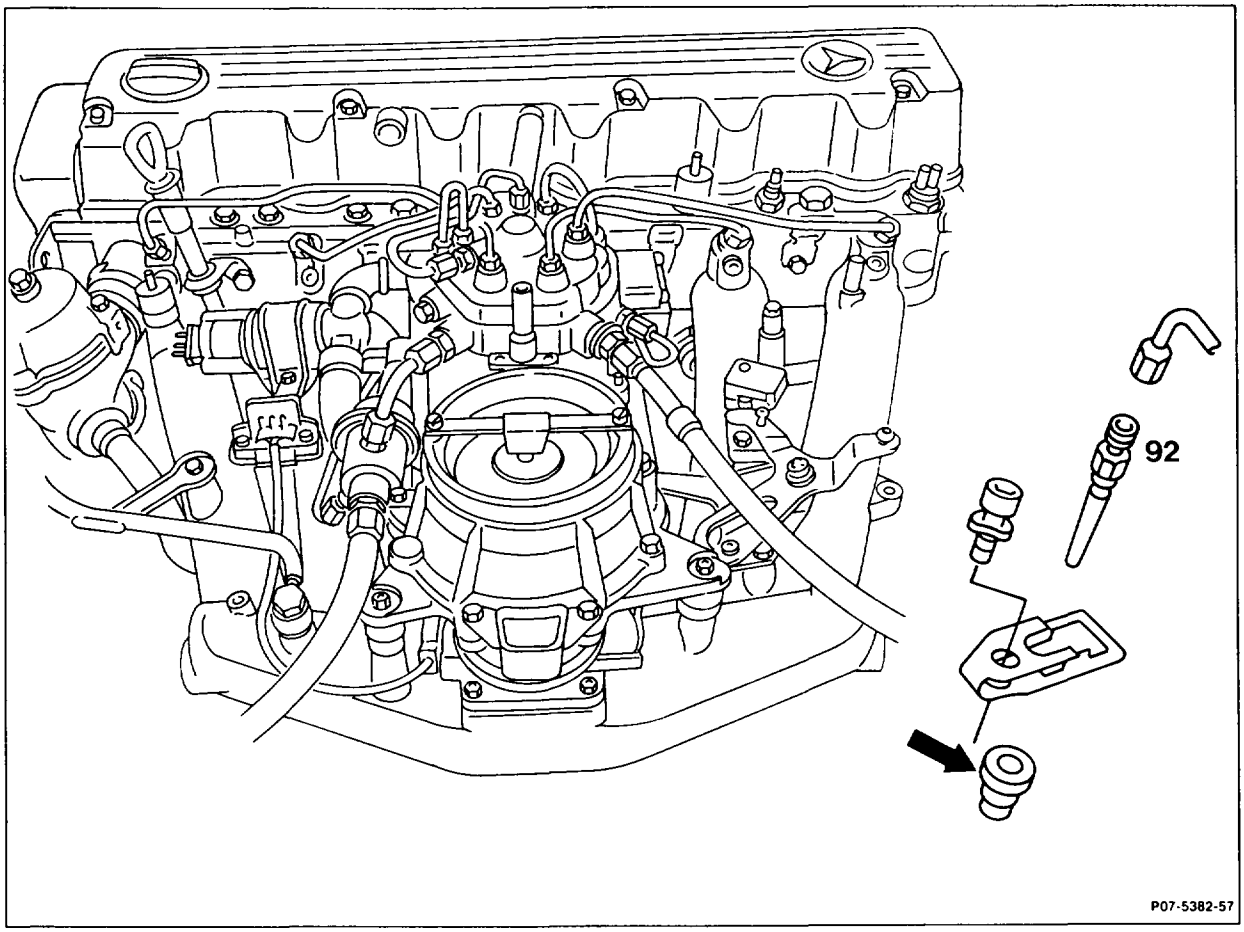

Injection lines	remove, install, counter-hold injection valves 10–15 Nm (reference value).
Holder	unscrew, screw on.
Injection valves (92)	remove.
Rubber seal (arrow)	replace.

Notes

Models 107, 124, 126, 201

Insert of injection valves made of brass

Production breakpoint: June–September 1987

Model	Engine	Engine end no. manual transmission	Engine end no. automatic transmission	Vehicle ident end no. A	Vehicle ident end no. F
107.041	103.982	001471–001616	006345–006961	072735–076997	–
124.026	103.940	014211–016180	027763–033038	534506–596298	–
124.030/050/090	103.983	015511–017498	078723–088958	534506–596298	047498– [1]
124.226	103.943	000051–000108	000089–000233	534506–596298	–
124.230/290	103.985	000205–000495	000668–001752	534506–596298	047617– [1]
126.020	103.941	002644–002910	008437–009406	350790–370272	–
126.024/025	103.981	004372–004851	035466–040974	350790–370272	–
201.029	103.942	004292–006311	007082–009100	391324–409823	387198– [1]

[1] not recorded

Production breakpoint: November 1987

Model	Engine	Engine end no. manual transmission	Engine end no. automatic transmission
124.026	103.940	017222–017258	036754–036847
124.030/050/090	103.983	–	096881–096991
124.230/290	103.985	only 000616	002230–002239
126.020	103.941	003031–003035	009996–010009
201.029	103.942	007387–007401	010284–010299

Models 107, 124, 126, 201
Injection valves with identification on shaft
000 078 56 23.

Production breakpoint: September 1988

Model	Engine	Engine end no. manual transmission	Engine end no. automatic transmission
107.041	103.982	002104	009200
124.026	103.940	024034	054766
124.030/050/090	103.983	026749	137957
124.226	103.943	000328	000773
124.230/290	103.985	001558	005572
126.020	103.941	003669	012386
126.024/025	103.981	006194	068839
201.029	103.942	011563	016436

Replacing air filter element

0980

All engines
except engines 116 117 with secondary air injection pump

All engines except engine 120

- Remove air filter element.
- Clean out air cleaner housing and cover.
- Inspect air cleaner cover seal and replace if damaged.
- Carefully insert new air filter element and note correct location of rubber seals.

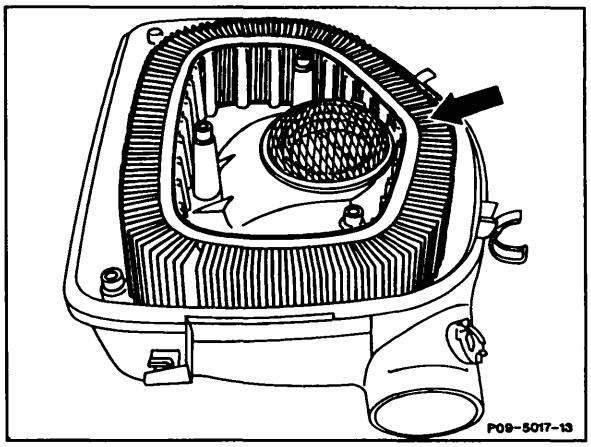

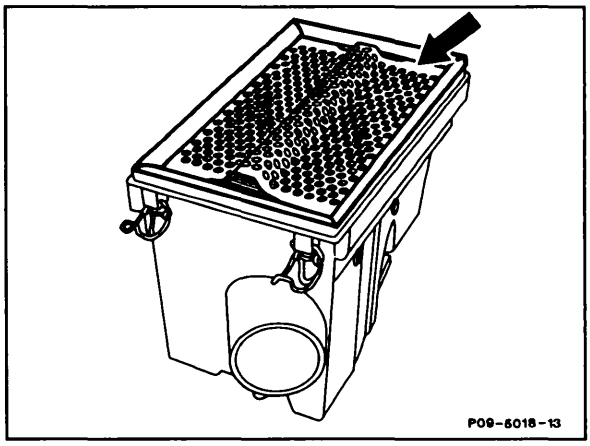

Engine 120

- Pull out slide (1). Remove air cleaner (2).and remove air filter element (3).
- Clean air cleaner housing (2).
- Press filter element into air cleaner (2).
- Push air cleaner in until it contacts stop.
- Push slide (1) in.

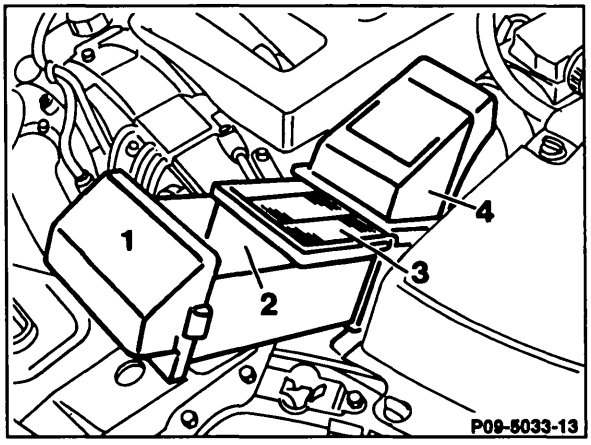

09–1051 Removing and installing, replacing air cleaner

Operation no. of operation texts and work units or standard texts and flat rates:
09–1051.

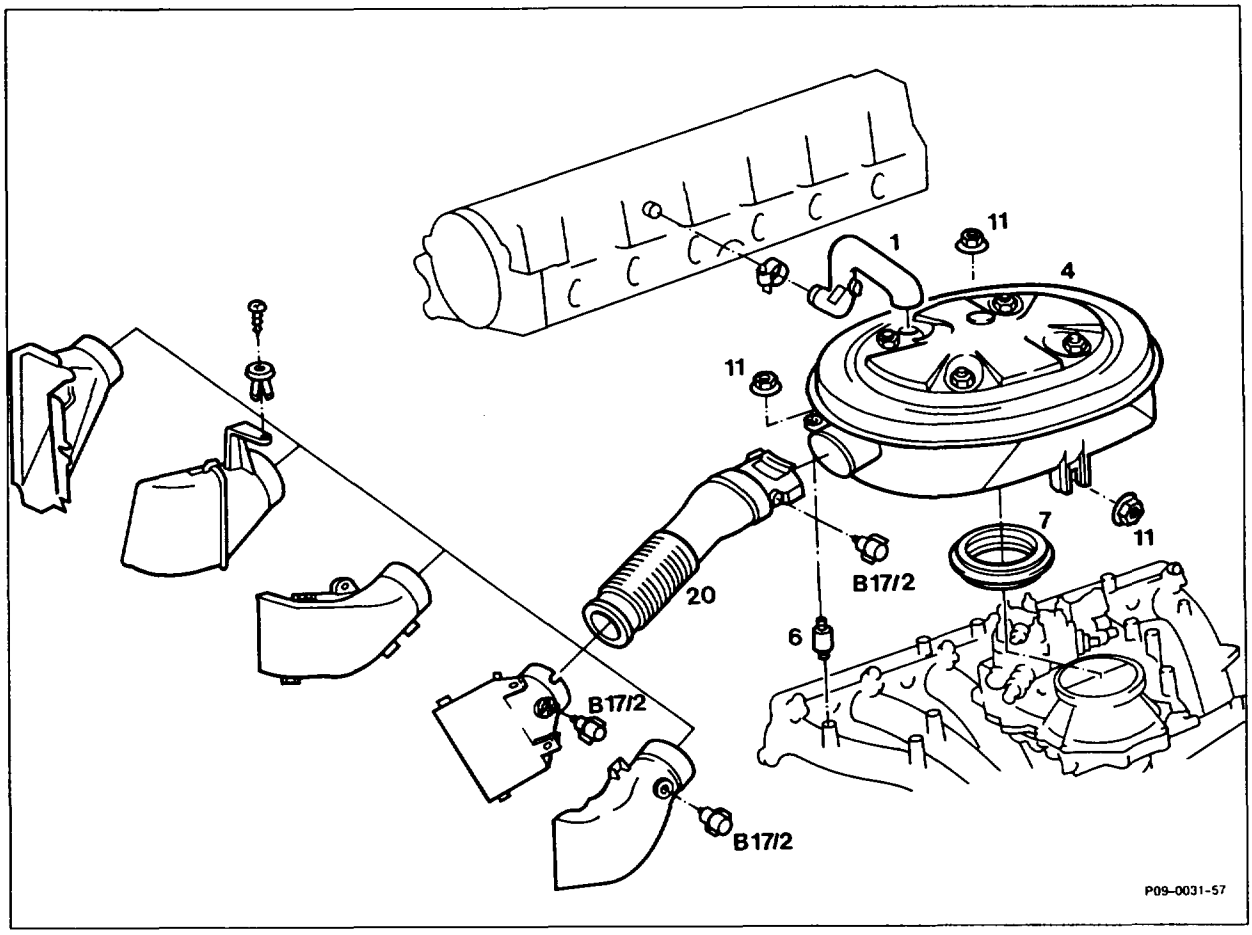

KE intake air temperature sensor (B17/2)	remove, install (only models 107, 124, 126). Pay attention to note for model 124.090.
Nuts (11)	unscrew at bonded metal stops (6) and holder at mixture control unit, screw on. If necessary, replace bonded metal stop (6) according to condition.
Shaped hose (1)	for crankcase ventilation, detach, attach. If necessary, replace shaped hose according to condition.
Air intake hose (20)	at air cleaner (4), pull off, fit on.

Air cleaner (4)	take off, fit on.

Installation note
When installing, ensure seal (7) is correctly seated between air flow sensor and air cleaner.

Note
A recess is provided in the top part of the air cleaner for setting the idle air mixture.

Model 124.090 KAT/RÜF
From start of production 12/85 up to mid 02/86 no KE intake air temperature sensor (B17/2) was installed.

Production breakpoint: 02/86 indefinite

Model	As of vehicle ident end no.
124.090	1F 004948

On vehicles with lower vehicle ident end no. the intake air temperature sensor (B17/2) **must** be **retrofitted**.
The cable harness for the electrical connection is provided in these vehicles. The connection cable is integrated in the engine wiring harness. To untie, take off air cleaner.

Part

Designation	Part no.
KE intake air temperature sensor	007 542 21 17

Available from: Plant 50 (PEW Sindelfingen)

Location of KE intake air temperature sensor (B17/2, arrow)

Models 107, 124, 126
in intermediate piece of air cleaner bottom part

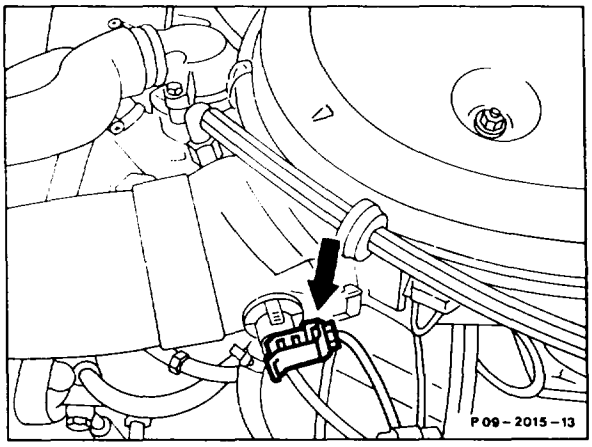

Models 129.060, 201.029
in intake air cowl

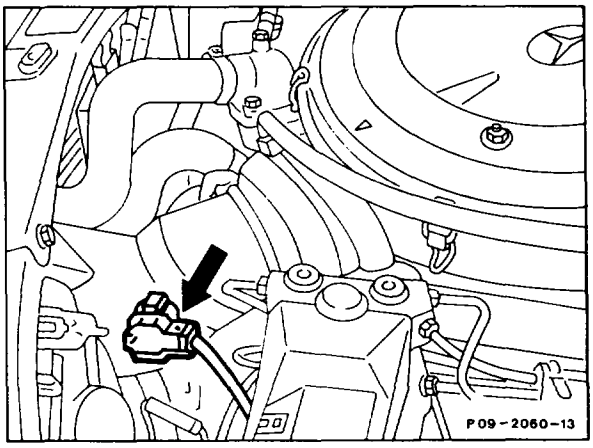

09–8091 Replacing intake air cowl

Preceding work:
Removing and installing, replacing air cleaner (09–1051).

Operation no. of operation texts and work units or standard texts and flat rates:
09–8091.

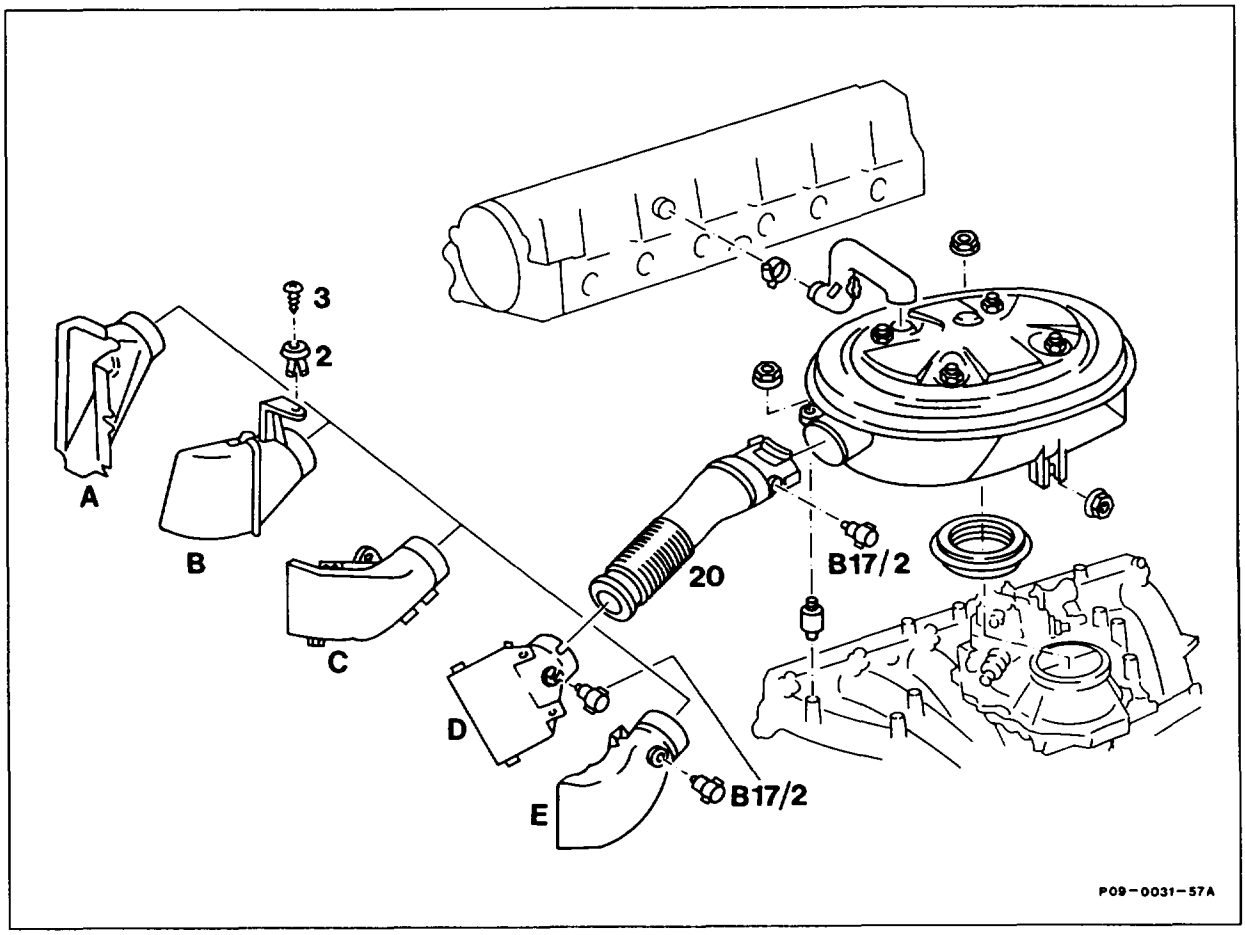

A	Model 107	D	Model 129
B	Model 124	E	Model 201
C	Model 126		

Air intake hose (20) . . . . . pull off air intake cowl, fit on.

Screw (3) . . . . . unscrew, screw in. Press out expanding clip (2), insert).

Installation note
Replace expanding clip.

Intake air cowl (A, B, C, D or E) . . . . . remove, insert.

Models 129.060, 201.029

KE intake air temperature sensor (B17/2) . . . . . remove from intake air cowl, fit on.

Inspecting poly-V-belt

1351

Engines 102 103 104 119 120 601 602 603

Special tools

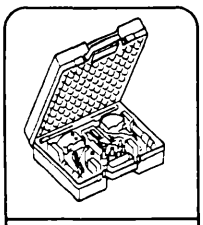

001 589 76 21 00

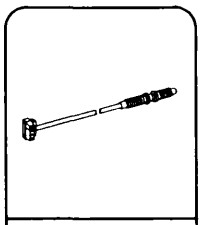

124 589 36 63 00

Note: Turn crankshaft using starter and compression test recorder on all models except 140. Use ignition switch on model 140.

⚠

IMPORTANT NOTE!

Model 124.034/036, 129, 140

Certain connectors must be disconnected when turning the crankshaft. This results in the setting of Diagnostic Trouble Codes which must then be erased from the following control modules:

- LH-SFI control module.
- Ignition control module.
- Diagnostic module, if equipped.

(Refer to Diagnostic Manual, Engines, Vol. 2, 3).

⚠ **WARNING!**

Because of the high ignition voltage on gasoline engines, it is dangerous to touch ignition components (ignition coil, ignition cables, spark plug connector, module push connectors) when

- the engine is running,
- the engine is being started,
- the key is in position 2 while the engine is being turned manually.

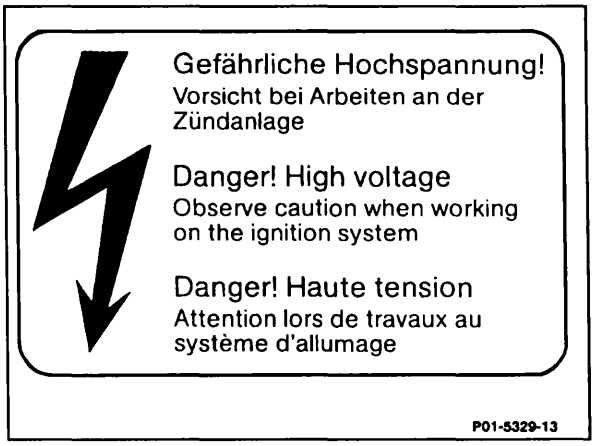

Disabling ignition

- Switch off ignition on gasoline engines. Pull off plug from crankshaft position sensor (green or black cable) on control module (arrow).

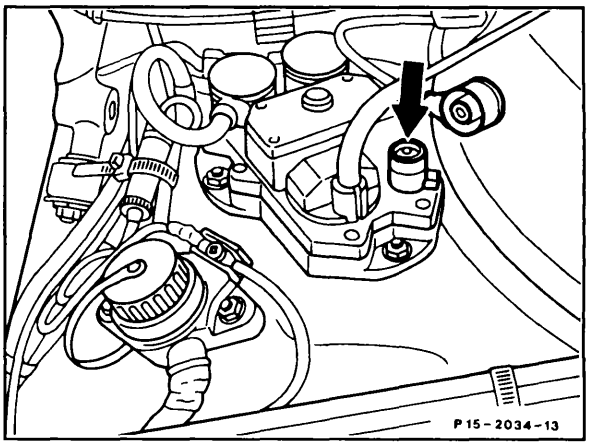

Model 201 with TSZ ignition control module

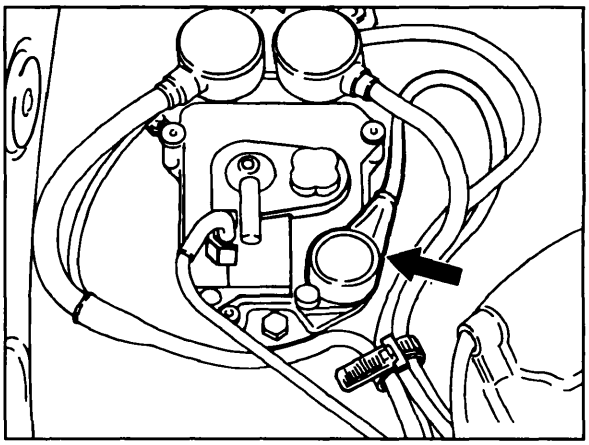

Models 124, 126, 129 and 201 with EZL ignition control module

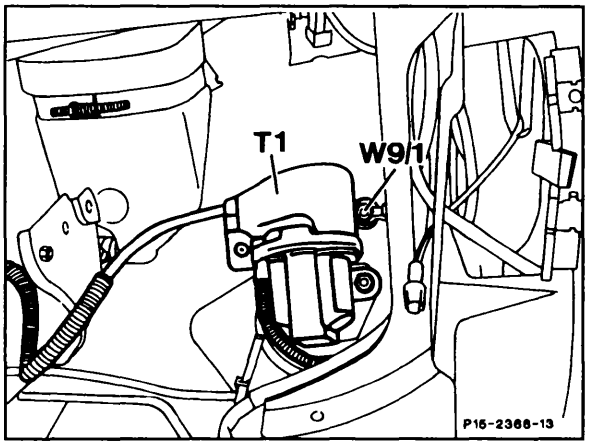

Disconnect connector on model 140

Disabling fuel supply and connecting remote starter switch

Model 124, 126, 201 except model 124 starting model year 1990 and model 201.029 starting model year 1990

- Before turning the engine, the fuel pump relay module (N16/4) should be pulled out, so that no fuel is injected into the engine.

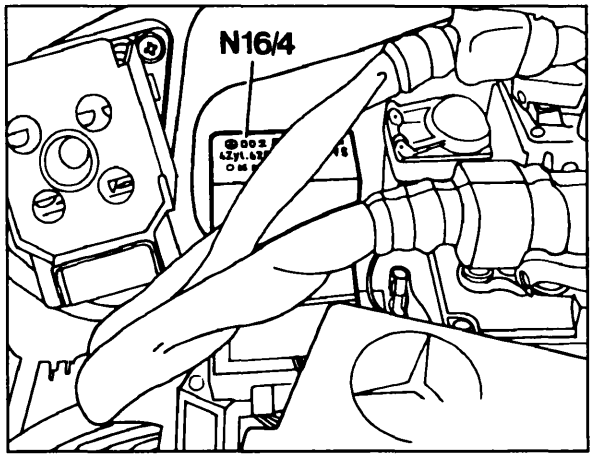

Shown on model 201

- Connect compression test recorder to battery positive (circuit 30) and to the plug (circuit 50) of the connector (X27). Insert adapter cable 124 589 36 63 00 (01) in the cable (02) of the compression test recorder.

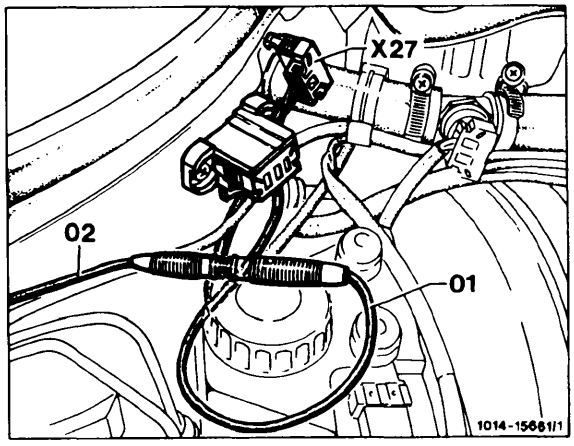

Model 124, left side component compartment wall

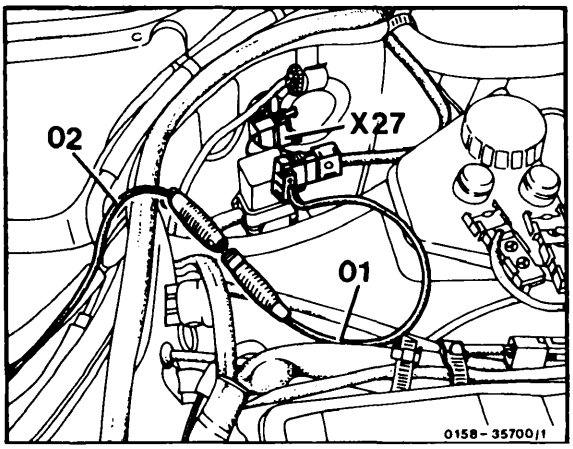

Model 126, left side of fire wall

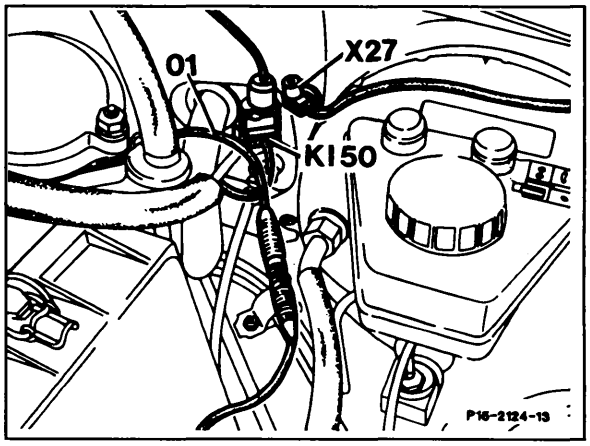

Model 201, left side component compartment wall

Model 124 with Engine 103, 104 starting model year 1990,
Model 201.029 starting model year 1990

- Remove component compartment cover.

- To interrupt fuel supply, remove engine systems control module (MAS) (N16) by turning locking knob from position 1 to position 0. Pull unit up.

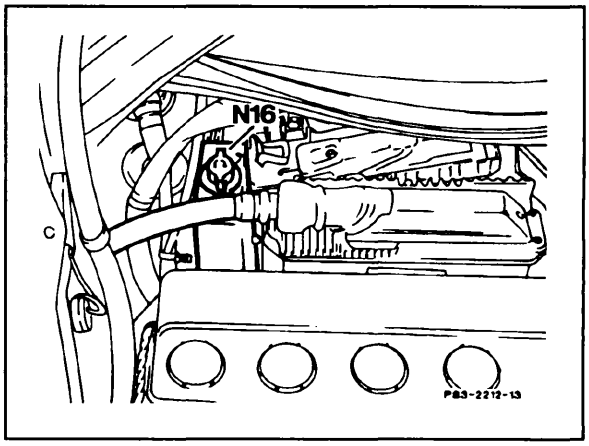

Shown on model 124

Model 124 with engine 119

- In order to interrupt the fuel supply, disconnect engine plug connection (X26/17) of engine wiring harness on right side of vehicle.

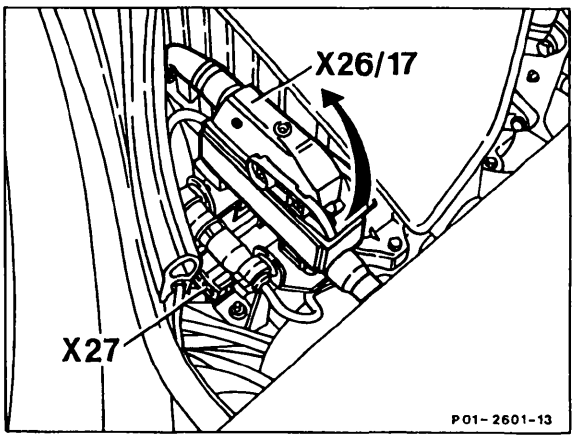

- Remove component compartment cover.

Connect remote starter switch to starter harness connector (X27) (circuit 50) and to terminal block (X4/10) (circuit 30) position B located behind Module box.

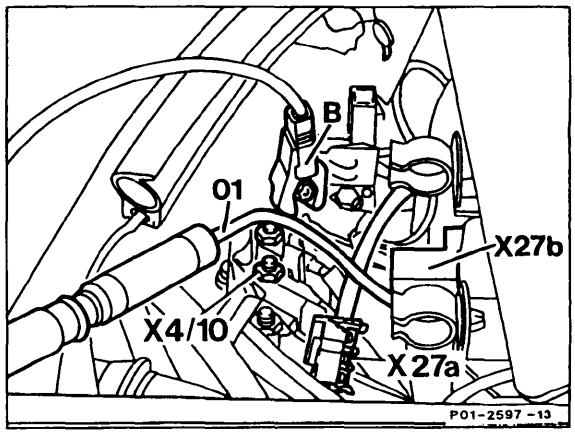

Model 129

- Remove component compartment cover

- To interrupt fuel supply, remove engine systems control module (MAS) (N16) by turning locking knob from position 1 to position 0. Pull unit up.

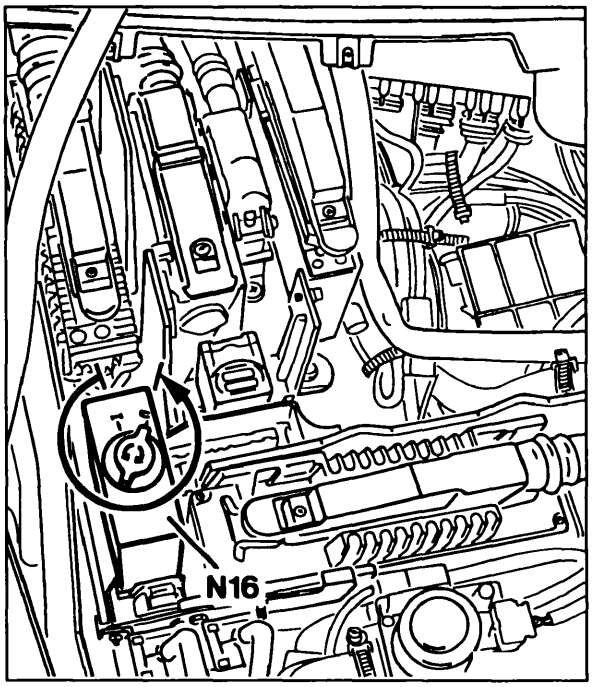

Model 129

- Disconnect plug (28) from starter harness connector (X27). Connect remote compression tester clamp (A) to plug (28) pin 1 (circuit 50) and clamp (B) to terminal block (X4/10) (Circuit 30).

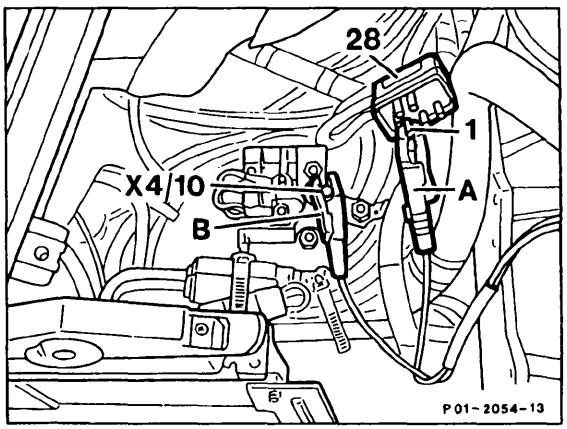

Model 140

- To interrupt the fuel supply disconnect engine plug connector (X26/2) on right side of vehicle.

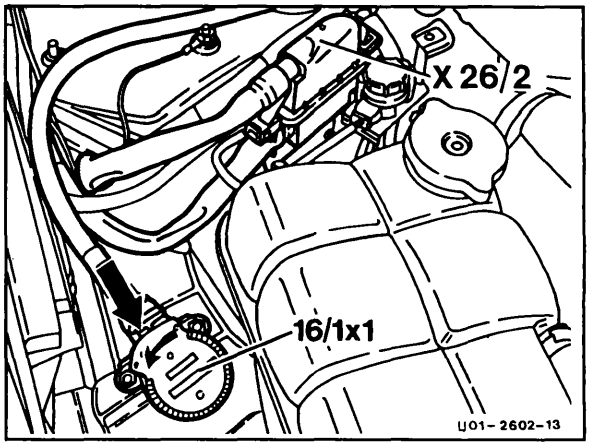

Note for Diesel engines

- While cranking, press shut off lever (arrow) to prevent the engine from starting.

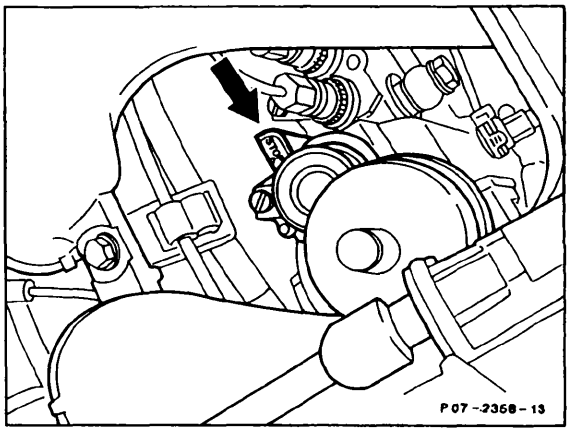

Checking poly-V-belt

- Mark poly-V-belt clearly using chalk.

- Crank engine in steps while checking the poly-V-belt for damage.

- End the process when the mark is visible again (one full turn of the belt).

- The poly-V-belt must be replaced according to SMS Job No. 13-342 (on separate order) if the damage patterns on the following pages are evident:

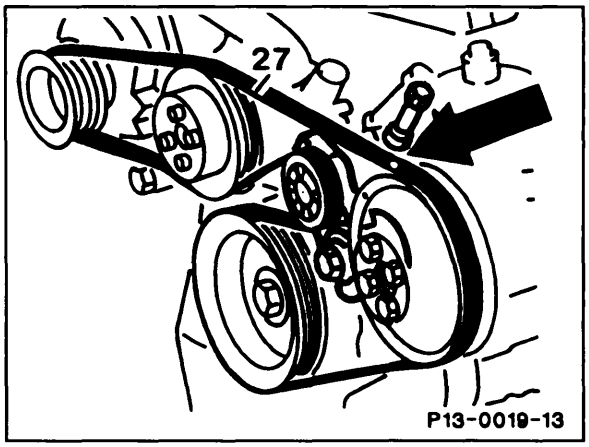

Damage patterns

- Rubber lumps in rib base (C).
- Dirt or stone deposits (D).

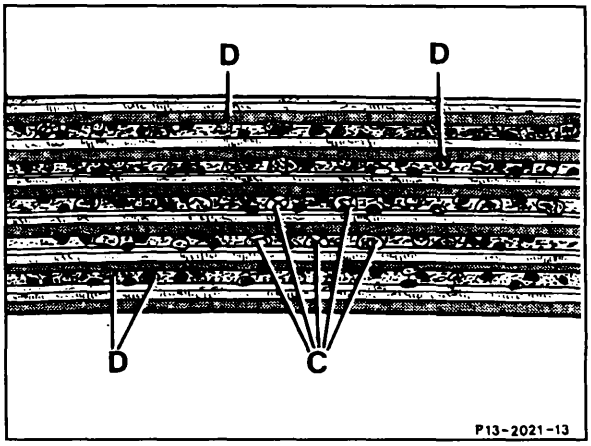

- Flank wear (F, ribs are pointed - trapezoidal when new, E).
- Strand showing through rib base (G, brighter spots).

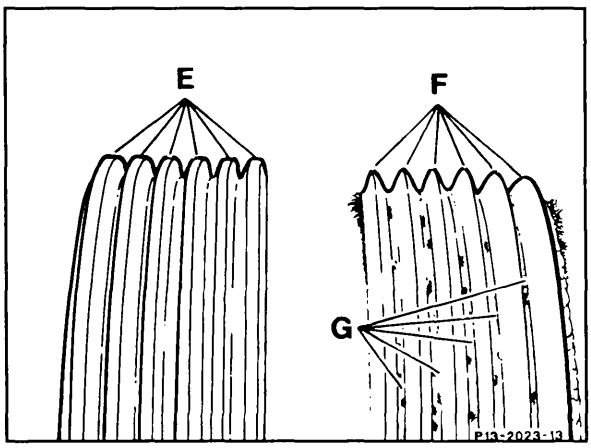

- Transverse cracks (H) in several ribs.

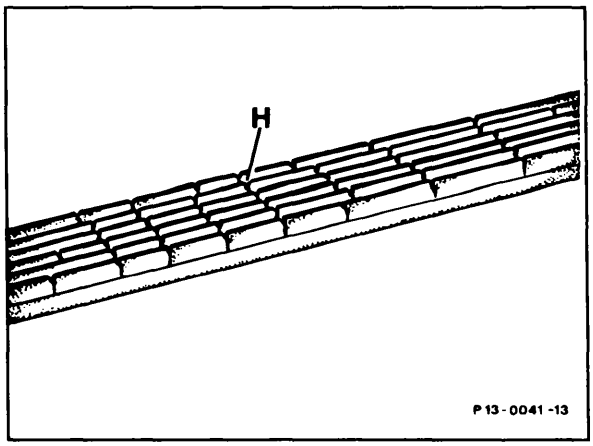

- Transverse cracks in ribs (H) and/or rib chunking (J).

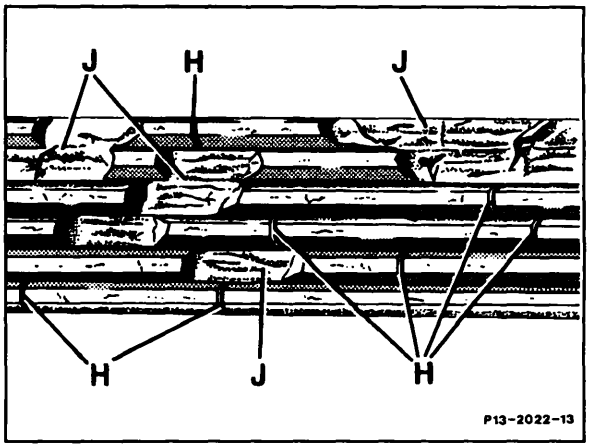

- Strand (K) pulled out laterally or outer strands frayed (L).

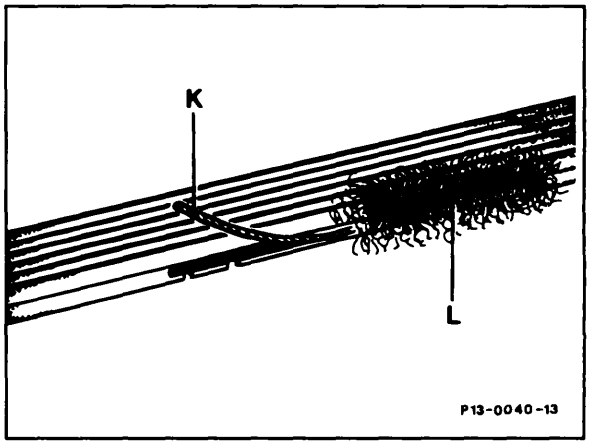

- Transverse cracks (M) on back.

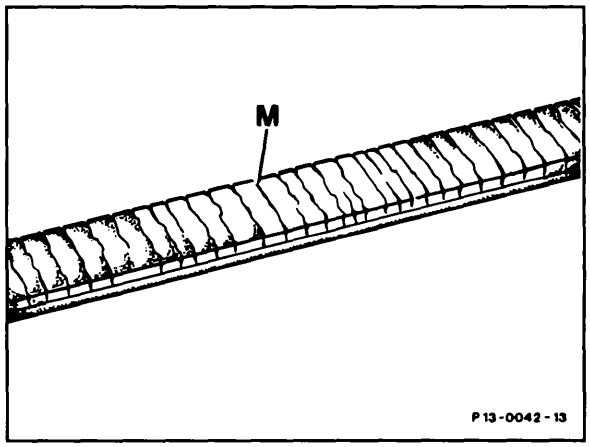

- Rib separated from belt (arrow).

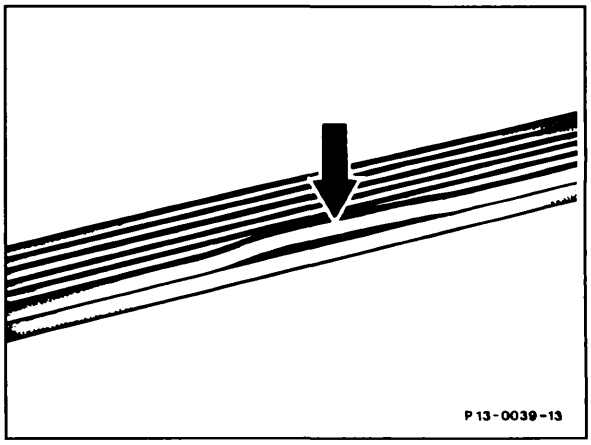

- On diesel engines, with 1st version tensioning lever bearing, check the following parts:

Check pivot shaft (30) of tensioning lever (360) for tight seat (visual inspection)

- When the pivot shaft is loose, the shaft collar no longer rests against the timing housing cover (28). This is also recognized by misalignment of tensioning pulley.

Check tensioning lever bearing for wear (visual inspection)

- Tensioning lever bearing bushings are worn out, resulting in considerable play between pivot shaft (30) and tensioning lever (360). Recognized by tilted position of tensioning pulley.

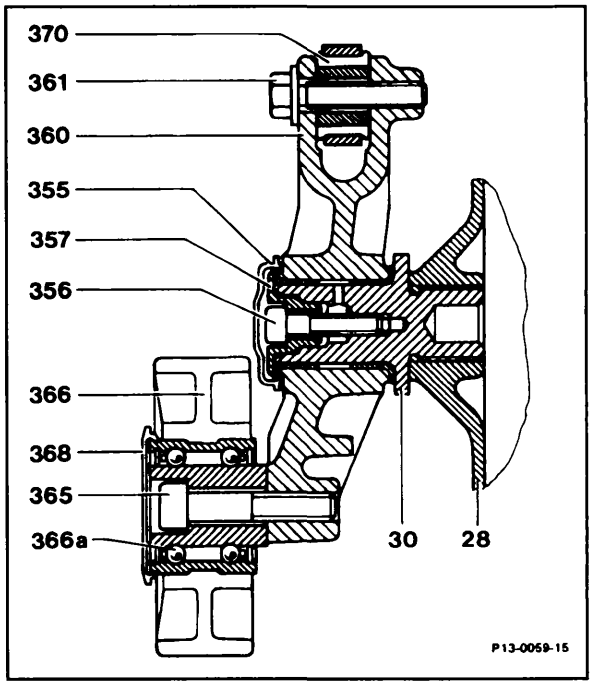

Replacing poly-V-belt

Torque specifications (Nm)		Engine	
Viscofan clutch on coolant pump or bearing body		103, 104, 602, 603	45
Tensioning device mounting bolt (M 12)	19 mm	102, 103	75
	17 mm	102	80
Fan to viscofan clutch		103, 104	10

Special tools

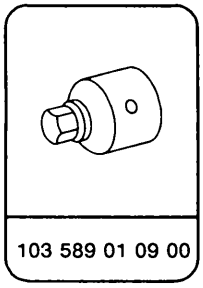
103 589 01 09 00

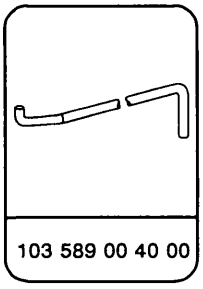
103 589 00 40 00

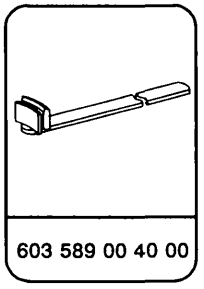
603 589 00 40 00

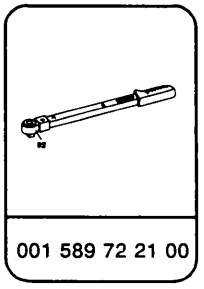
001 589 72 21 00

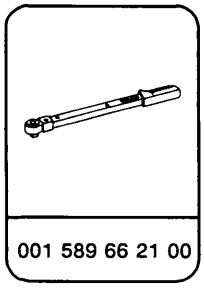
001 589 66 21 00

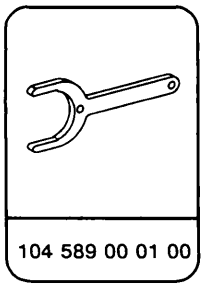
104 589 00 01 00

Engine 102

- Loosen screw (25) by 1/4-1/2 turn.

- Loosen tensioning device with tensioning nut (24) (turn counterclockwise) until poly-V-belt (27) can be removed.

- Check the pulley profiles and the tensioning device for damage and dirt and replace if required (e.g. worn out tensioning device bearing bushing, dents in the pulleys, etc.).

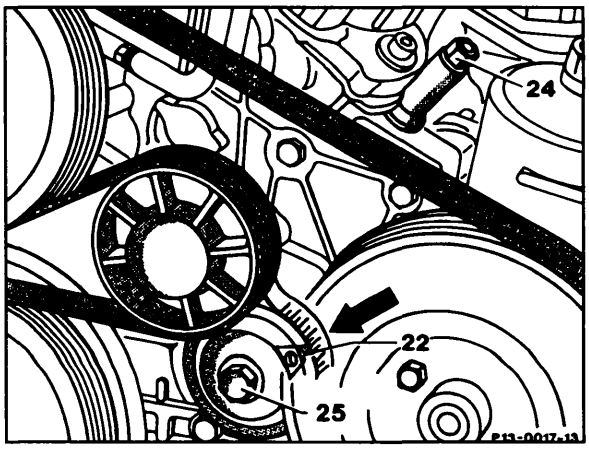

- On vehicles produced up to the middle of October 1986, slide adjusting pointer (22) to the left until the tip of the pointer is above the first dividing line of the adjusting scale (arrow).

- On vehicles produced as of the middle of October 1986, slide adjusting pointer to the left until the tip of the pointer is above the thin line (A) of the adjusting scale.

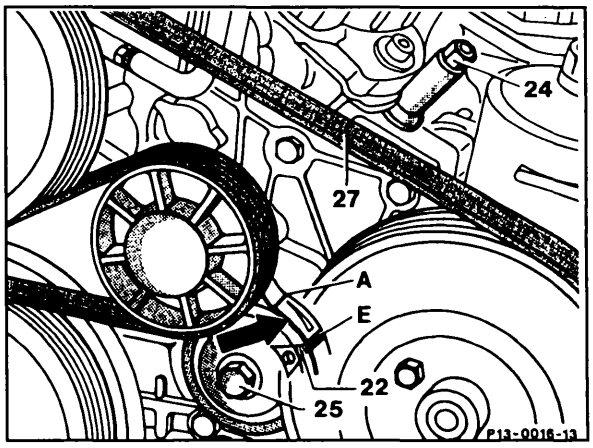

Installing poly-V-belt:

- Start in numerical sequence of belt routing diagrams at tensioning pulley (1) (for illustrations, refer to following pages).

Note:
Do not use belt wax or similar products.

- Check the seating of the poly-V-belt on the belt pulleys.

- On vehicles produced up to the middle of October 1986, turn the tensioning nut (24) to the right until the tip of the adjusting pointer (22) is positioned between the 8th and 9th index mark.

- On vehicles produced as of the middle of October 1986, keep turning tensioning nut to the right until the tip of the adjusting pointer is centered above the thick line (E) of the adjusting scale.

- Tighten bolt (25) as follows:

Width between flats 19 mm	75 Nm
Width between flats 17 mm (shouldered bolt)	80 Nm

Engine 102

Belt routing diagram on vehicles with power steering and A/C compressor

Belt length: 1980 mm

1 Tensioning pulley
2 Crankshaft
3 A/C compressor
5 Generator
7 Power steering pump
8 Coolant pump

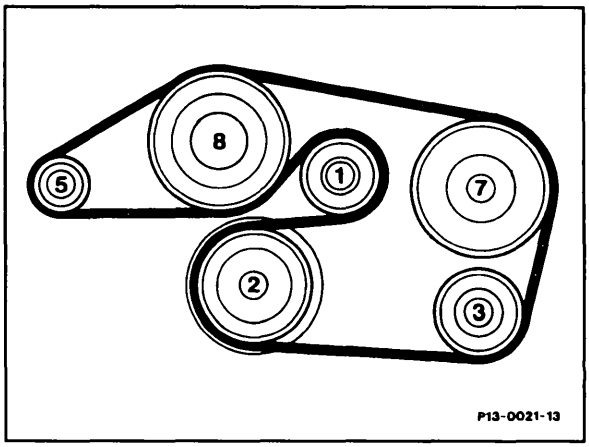

Engine 103

- Loosen fan cover and place on fan.
- On Model 201: remove radiator.
- On all models unscrew viscofan clutch with fan. Remove fan cover.
- For loosening and tightening of hex. socket screw, use special tool 103 589 01 09 00 and torque wrench 001 589 72 21 00.

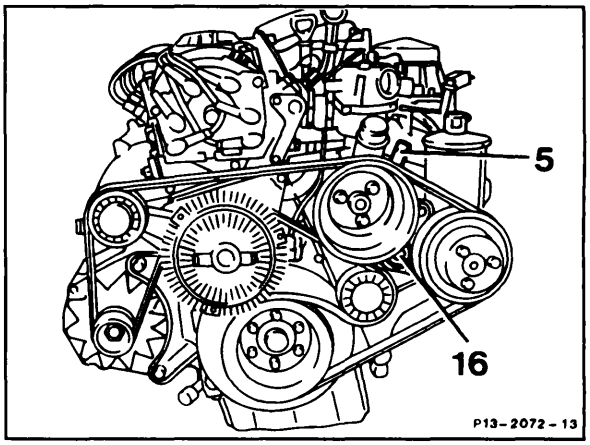

- Lock pulley by simultaneously engaging counterhold 103 589 00 40 00 in bearing bracket notch and in hub bore.
- Loosen screw (16) by about 1/4 to 1/2 turn.
- Release tensioning device with tensioning nut (5) (turning counterclockwise) until belt can be removed.
- Check pulley profiles and tensioning device for damage and contamination, replace if required (e.g. worn out bearing points of tensioning device, dents in pulleys etc.).

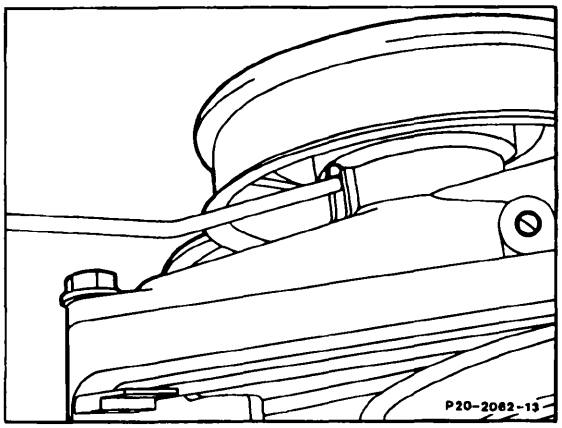

- Turn adjusting pointer (219) to the right (seen from the front) and set adjacent to the 1st index mark (arrow), on vehicles as of 02,1988, set on the cast mark on the right (seen from the front).

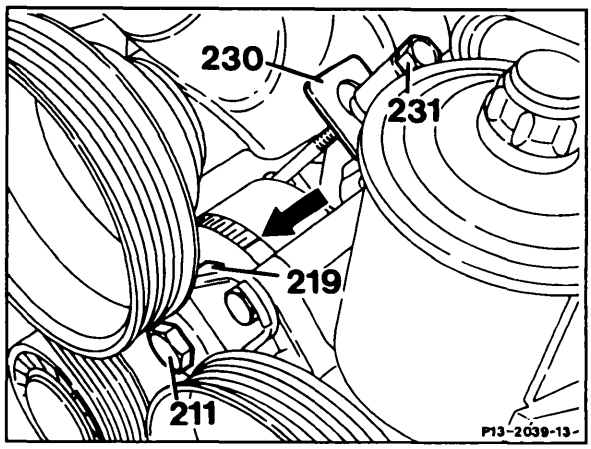

Installing poly-V-belt:

- Start in numbering sequence of belt routing diagrams, start with tensioning pulley (1).

- Do not use belt wax or similar products.

- Turn clamping nut (231) to the right until the adjusting pointer is positioned over the 7th index mark (arrow), on vehicles as of 2/88 over the left mark accordingly (seen from the front).

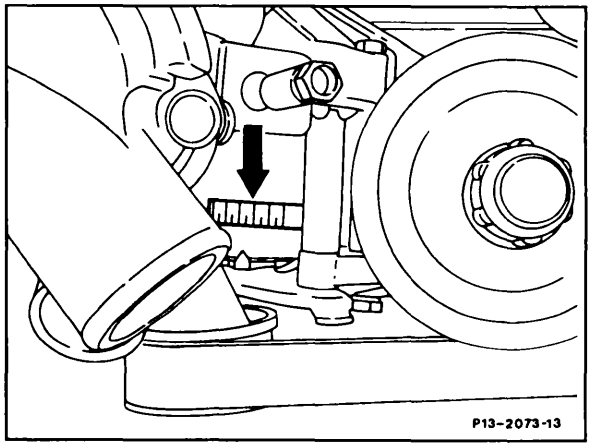

- Tighten bolt (211) to 75 Nm (reference value).

Note: Starting November 1986 the generator is installed with a lower collar screw 13 mm. When this collar screw is removed, the poly-V-belt can be loosened by swiveling the generator and can be tensioned to its original condition without loosening bolt (211).

- Check if belt is correctly seated on pulleys.

- Insert and install viscofan clutch with fan cover.

- When tightening hex. socket screw (tightening torque 45 Nm) apply counterhold to pulley.

- To do this, insert counterhold at back of hub and engage simultaneously into holding groove of bearing bracket.

Then remove counterhold.

Engine 103

Belt routing diagram on vehicles with air conditioning compressor
Belt length: 2255 mm

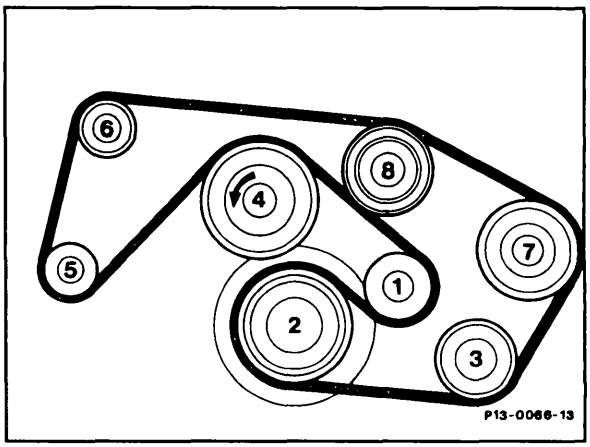

1 Tensioning pulley
2 Crankshaft
3 Compressor
4 Fan
5 Generator
6 Deflector pulley
7 Power steering pump
8 Coolant pump

Engine 104

- Pull out locking pin (1) on fan cover.
- Turn ring (2) to the left and remove.

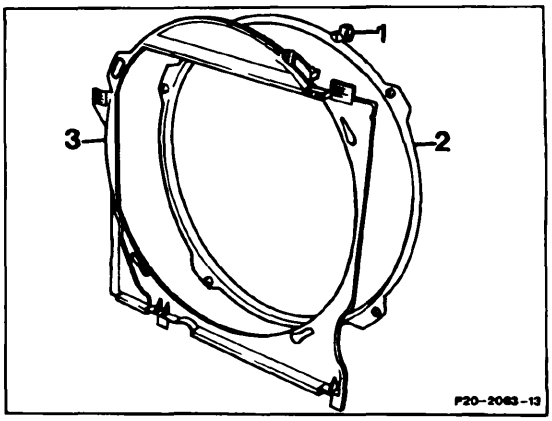

- Loosen screw (16) for approx. 1/4 to 1/2 turn.
- Loosen tensioning unit with tensioning nut (5) (**turn counterclockwise**) until the belt can be removed.
- Check pulley profiles and tensioning device for damage and contamination and replace, if required (e.g. worn out bearing points of tensioning device, dents in pulley etc.).

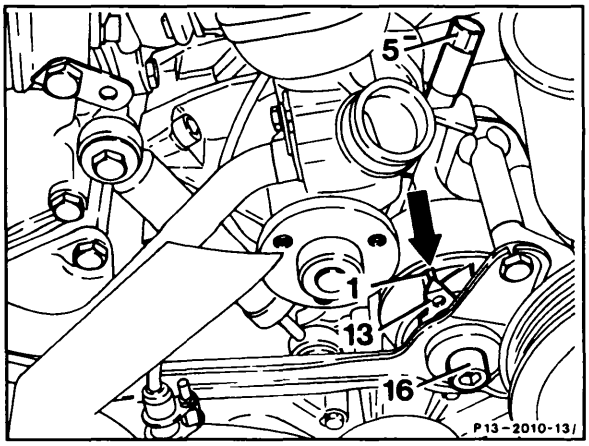

Install poly-V-belt:

- Starting in numerical sequence of belt routing diagrams at tensioning pulley (1).

Note: Do not use belt wax or similar products.

- Set pointer (13) of tensioning unit to mark 2.
- Turn tensioning nut (5) downwards until adjusting pointer (13) is in alignment with mark 1 (arrow).
- Check seat of belt on pulleys.
- Tighten screw (16) to 75 Nm.
- Install ring of fan cover in reverse sequence.

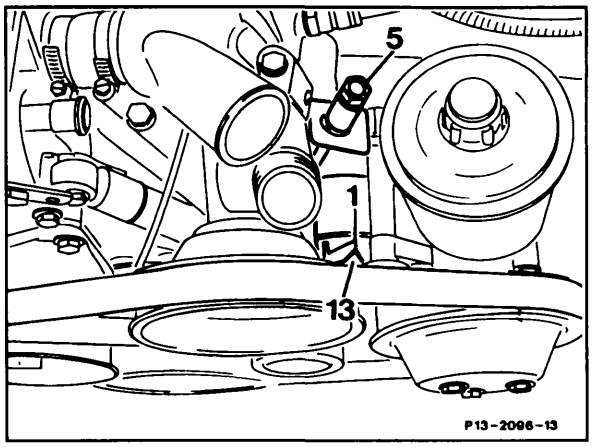

Engine 104 models 124, 129 up to 01/91

Belt routing diagram vehicles with air pump and with air conditioning compressor,

Belt length: 2445 mm; 6 ribs

1 Tensioning pulley
2 Crankshaft
3 Air conditioning compressor
5 Fan
7 Air pump
8 Generator
9 Guide pulley, upper
10 Power steering pump
11 Coolant pump

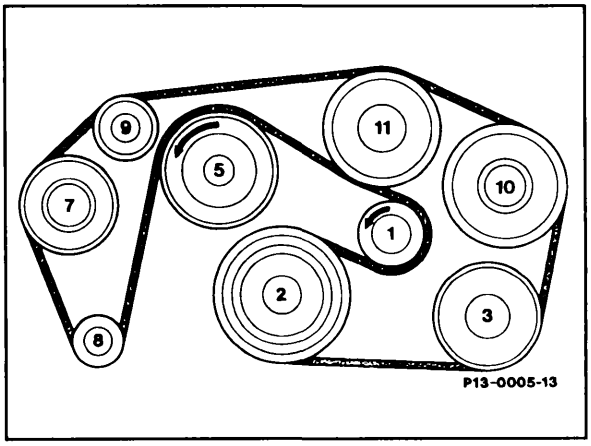

Engine 104 models 124, 129 starting 01/91, model 140

Belt routing diagram vehicles with air pump and with air conditioning compressor,

Belt length: 2440 mm
models 124, 129, 6 ribs; model 140 8 ribs

1 Tensioning pulley
2 Crankshaft
3 Air conditioning compressor
5 Fan
7 Air pump
8 Generator
9 Guide pulley, upper
10 Power steering pump
11 Coolant pump

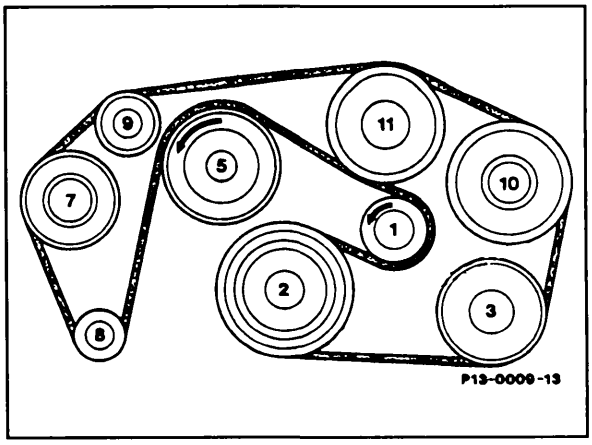

Engine 119

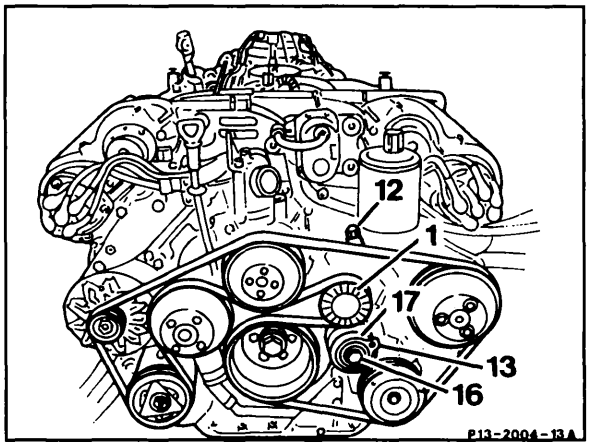

- Pull locking pin from fan cover.
- Turn ring to the left and remove.
- Loosen screw (16) approx. 1/4 to 1/2 turn.
- Loosen tensioning device with tensioning nut (12) (**turning counterclockwise**) until the belt can be removed.
- Check pulley profiles and tensioning device for damage and contamination and replace, if required (e.g. worn out bearing points of tensioning device, dents in pulleys etc.).

Installing poly-V-belt:

- In numerical sequence of belt routing diagrams, start with tensioning pulley (1).

Note:
Do not use belt wax or similar products.

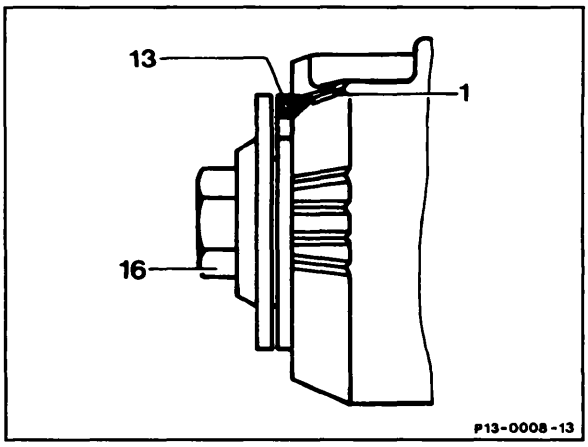

- Set pointer (13) of tensioning device to mark 1.
- Turn tensioning nut (12) clockwise until pointer (13) is in position 2.
- Check that belt is seated correctly on pulleys.
- Torque screw (16) to 100 Nm.
- Install fan cover in reverse order.

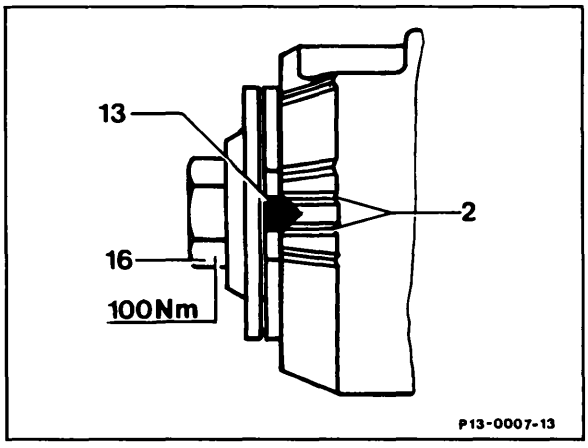

Engine 119 model 129

Belt routing diagram
Belt length: 2523 mm; 6 ribs

1. Tensioning pulley
2. Crankshaft
3. A/C compressor
5. Fan
7. Air pump
8. Generator
10. Power steering pump
11. Coolant pump

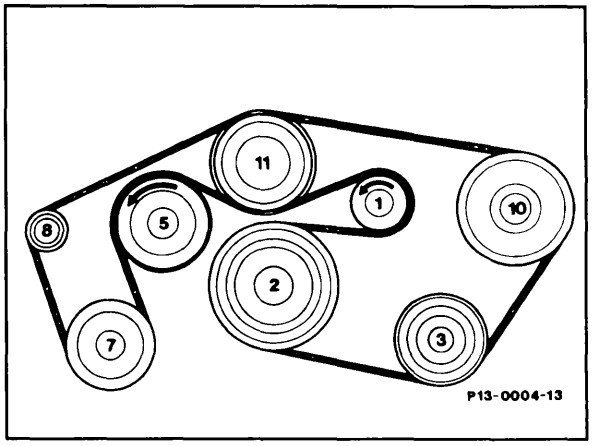

Engine 119.970 model 140.051
119.971 model 140.042
119.974 model 124.036
119.975 model 124.034

Belt routing diagram
Belt length: 2460 mm; 8 ribs

1. Tensioning pulley
2. Crankshaft
3. A/C compressor
5. Fan
7. Air pump
8. Generator
10. Power steering pump
11. Coolant pump

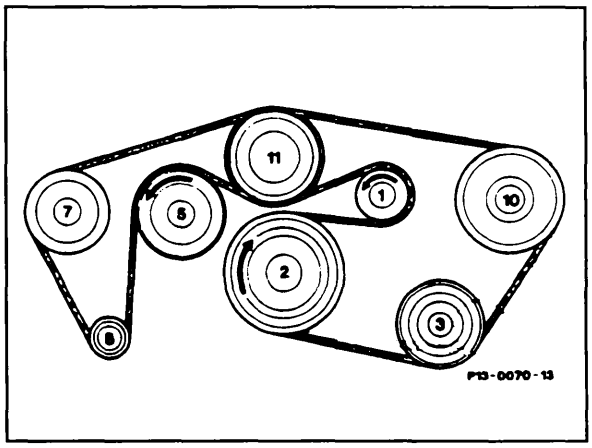

Engine 120

- Remove cooling fan (job no. 20-3129)

- Using 15 mm wrench, swing tensioning roller (1) aside in direction of arrow up to stop and no further so that belt can be removed. Check pulley profiles and tensioning device for damage and contamination and replace, if required (e.g. worn out bearing points of tensioning device, dents in pulleys etc.)

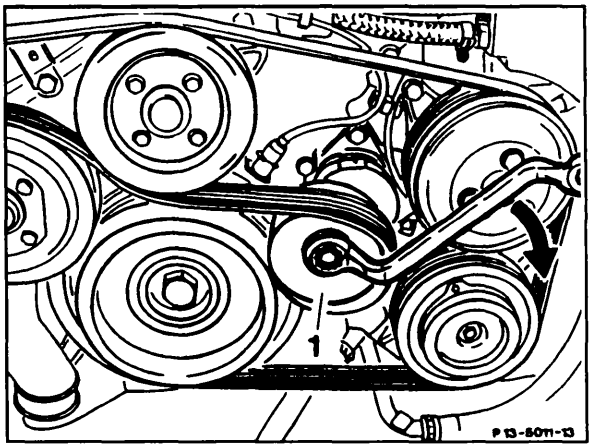

Installing poly-V-belt:

- In numerical sequence of belt routing diagrams, start with tensioning pulley (1).

Note:
Do not use belt wax or similar products.

- Pretension tensioning pulley (1) and install belt over pulley (1). Check that belt is seated correctly.

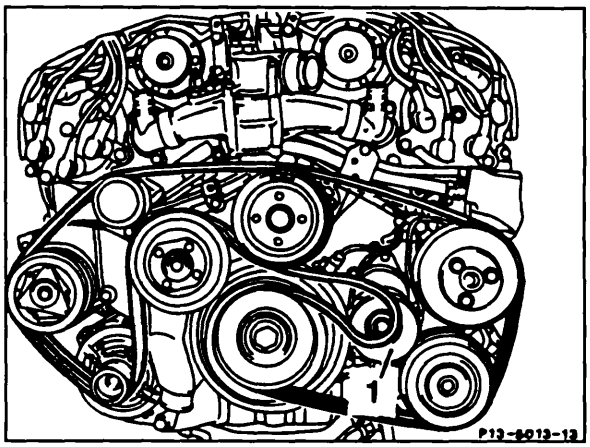

Note:
When the belt length and tension are correct the positioning mark (P) will be within range (A).

- Reverse procedure to install.

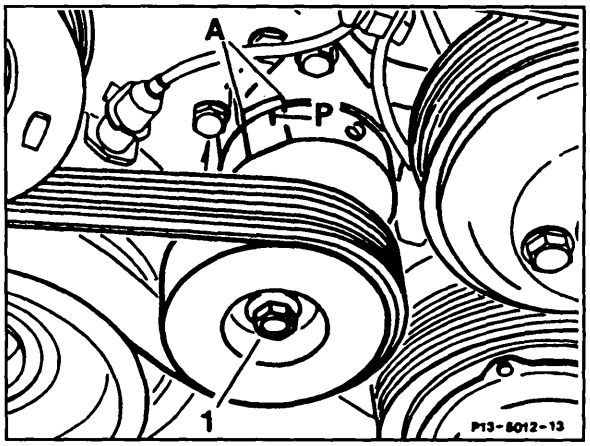

Engine 120.980 Model 140.056/57
Belt routing diagram
Belt length 2585 mm 8 ribs

1. Tensioning pulley
2. Crankshaft
3. A/C compressor
5. Fan
7. Air pump
8. Generator
9. Guide pulley, upper
10. Power steering pump
11. Coolant pump

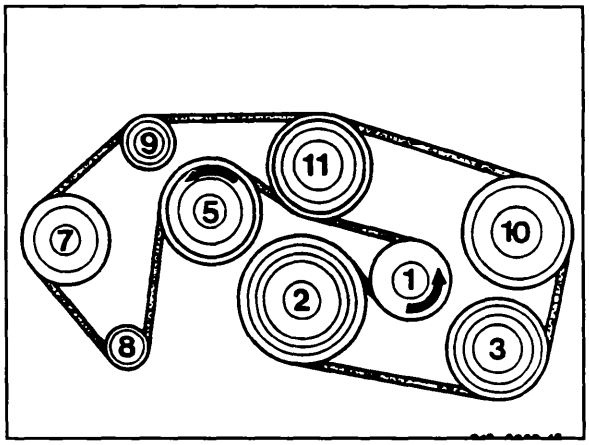

Engine 601, 602 and 603

On engine 601, loosen fan cover and place on fan. Unscrew fan and remove with fan cover.

On engine 602.911 in model 201 with one piece fan cover, remove radiator.

On engine 602 in model 201 with two piece fan shroud, pull locking pin (1) and turn ring (2) to the left. to open shroud and remove. Place ring on fan. Pull out shroud body (3) and remove ring.

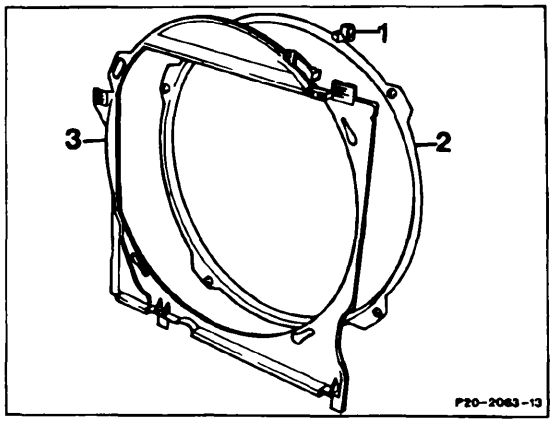

On engine 602 in model 124, loosen fan cover and place on fan. Unscrew viscofan clutch with fan and remove with fan cover.
To loosen and tighten hex. socket screw of viscofan clutch, use screwdriver insert 103 589 01 09 00 and counterhold 603 589 00 40 00.

On engine 603.96 (TURBO), the viscofan clutch cannot be removed without removing the radiator.

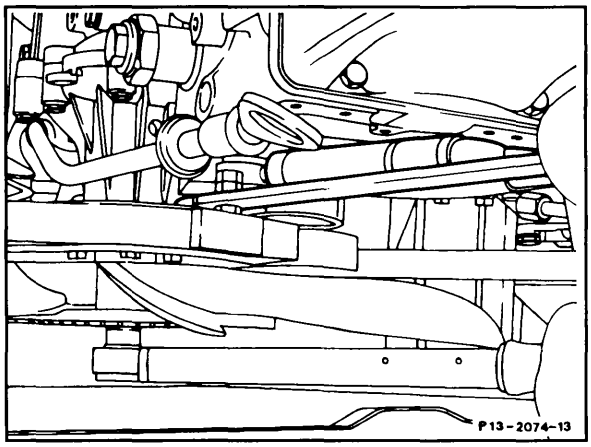

- Loosen tensioning device (vehicle tool or conventional tool):

- Unscrew nut (378).
- Insert a lever (12 - 13 mm dia., approx. 300 mm long) or wheel nut wrench from vehicle tool set into hole on spring tensioning lever (374). Push lever slightly to the left until screw (375) can be pushed back in direction of intake manifold.
- Loosen draw spring (380) by swiveling lever to the right.
- Push back tensioning pulley and remove poly-V-belt.
- Check belt pulley profiles and tensioning device for damage (such as worn out pivot points of tensioning device, dents in pulleys, etc.) and contamination and replace, if necessary.

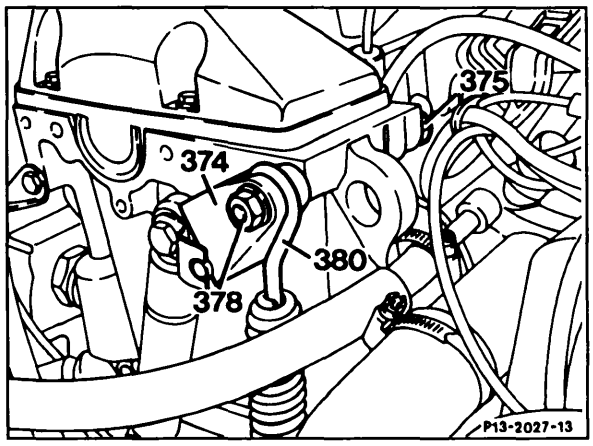

Installing poly-V-belt:

- Do not use belt wax or similar products.

- Slightly pull up tensioning pulley. Make a loop in the poly-V-belt with the V-grooves facing outwards, and slip between coolant pump pulley and crankshaft pulley.

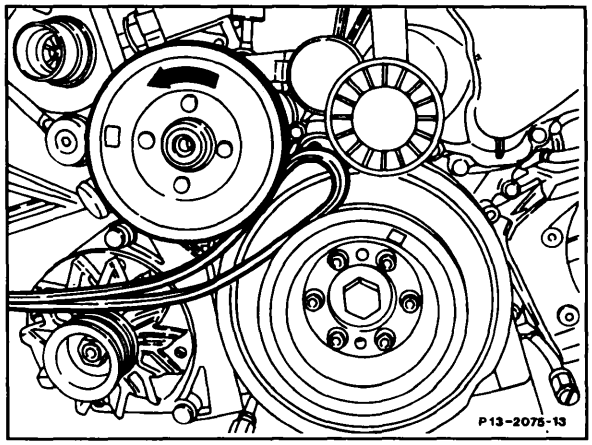

- Push poly-V-belt firmly against coolant pump pulley and turn pulley counterclockwise (arrow) until the poly-V-belt is adjacent to tensioning pulley.

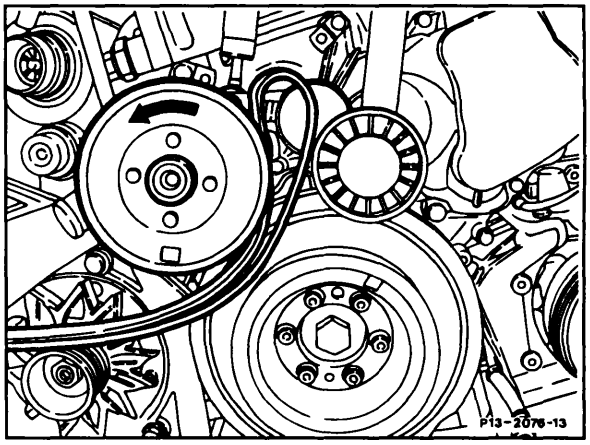

- Position poly-V-belt on tensioning pulley and on crankshaft pulley. Then turn free portion of poly-V-belt around and position on air conditioning compressor, power steering pump, coolant pump and generator pulleys.

- Tension poly-V-belt and screw on tensioning device.

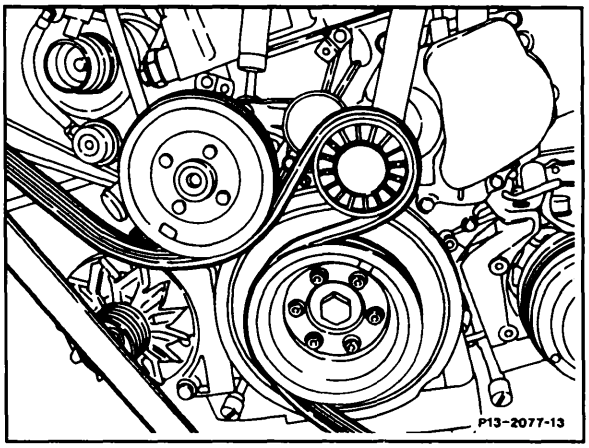

- Check seat of poly-V-belt on belt pulleys.

- On engines 601, 602, 603.91 in model 124, install fan or viscofan clutch with fan and fan cover.
- On engine 601, torque fan mounting screw to 28 Nm.
- Torque viscofan clutch mounting screw to 45 Nm. When tightening use counter hold 603 589 00 40 00.
- On engine 602.911 in model 201 without two piece fan shroud, install radiator.

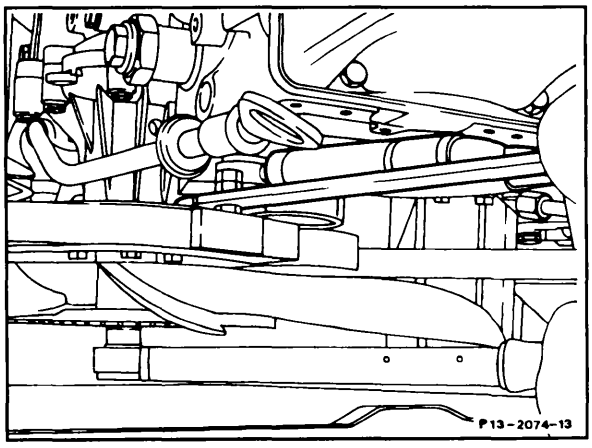

Belt routing diagram for vehicles with power steering and automatic climate control
Belt lengths:
Engine 601: 2120 mm
Engine 602: 2100 mm
Engine 603.96: 2145 mm
Engine 603.970: 2120 mm

1. Tensioning pulley
2. Crankshaft
3. A/C compressor
5. Generator
7. Power steering pump
8. Coolant pump

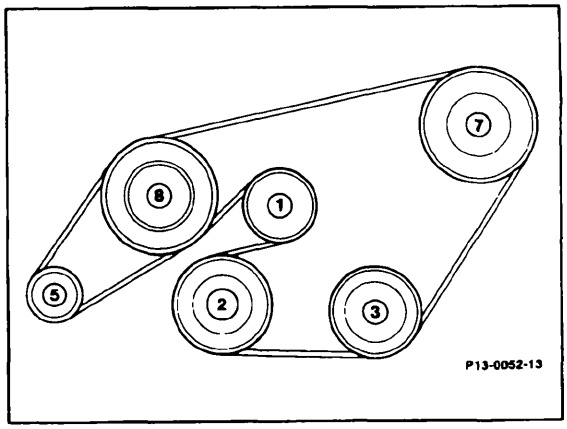

13–3420 Removing and installing poly-V-belt

Preceding work:
Viscous fan clutch removed (20–3120).

Operation no. of operation texts and work units or standard texts and flat rates
13–1202 – 13–4001

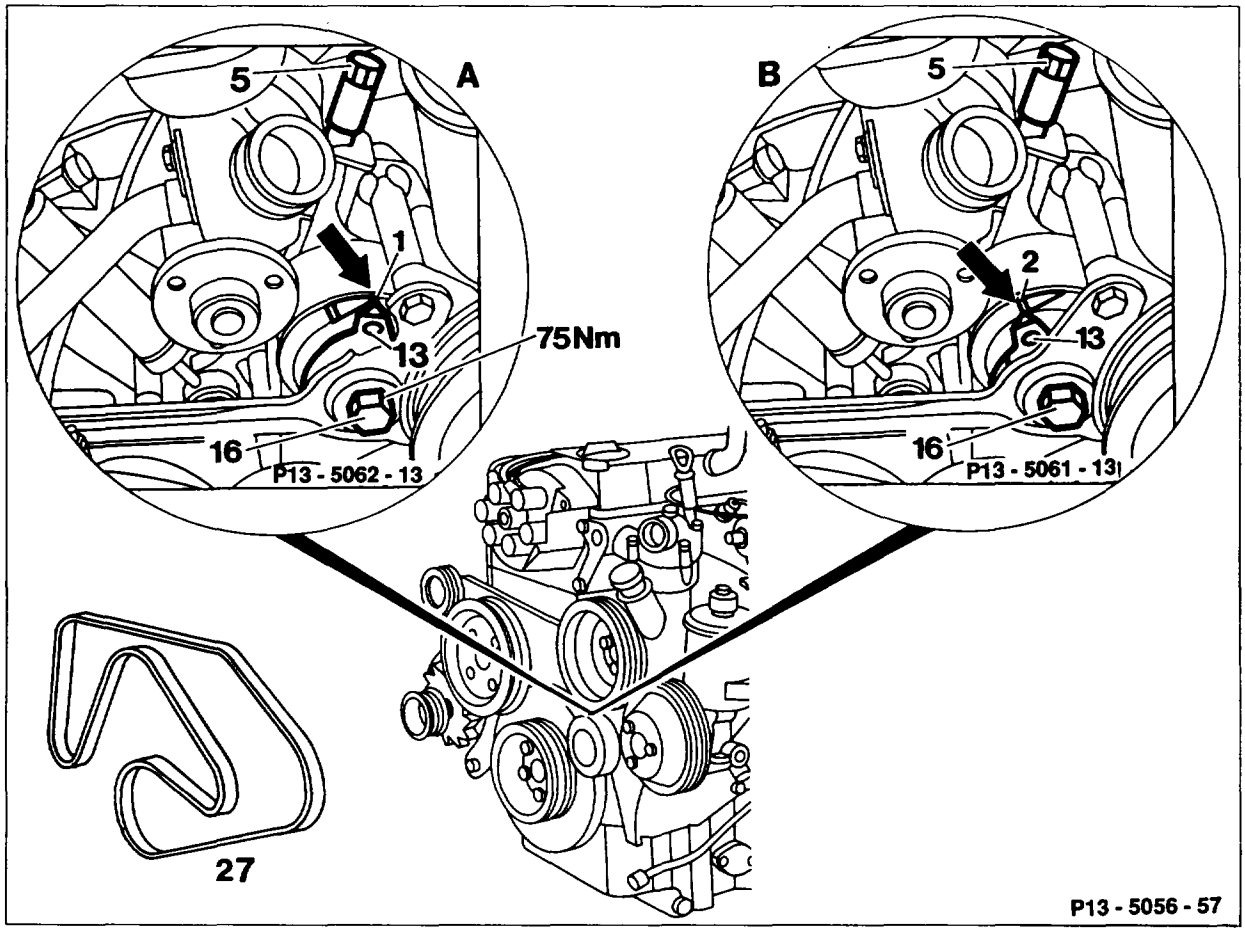

A Pointer (13) on marking (1) = poly-V-belt slackened
B Pointer (13) on marking (2) = poly-V-belt tensioned

Bolt (16)	slacken about 1/4 – 1/2 turn.
Tensioning nut (5)	slacken (turn to the left).
Poly-V-belt (27)	take off.
Belt pulley profiles	check for signs of damage and dirt, replace if necessary (eg. worn bearing points of tensioning device, dents in belt pulleys etc.).
	⚠ If poly-V-belt has broken or dropped off, check concentricity of shafts and belt pulleys.
Setting pointer (13)	turn to marking (1) (arrow).

Poly-V-belt	fit on beginning at tensioning pulley (1) (running diagrams, see 13-3440).
	⚠ Do not use belt wax or similar products.
Tensioning nut (5)	tension until setting pointer (13) is aligned with marking (2) (arrow). Pay attention to note.
Bolt (16)	tighten (75 Nm).
Seat of belt on belt pulleys	check.

Tightening torque in Nm

Securing bolt of tensioning device	75

Special tool

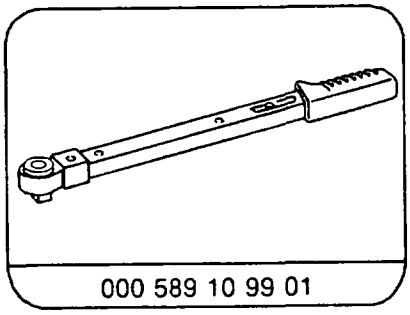

Note

The adhesive plate used (Fig. A) (arrow) has been replaced as of February 1988 by a cast setting scale (Fig. B) (arrow).

On vehicles with adhesive plate (Fig. A) (arrow), tension poly-V-belt as follows.

Turn tensioning nut (5) until setting pointer (13) is matched with the following scale graduations.

Engine w/o A/C compressor 5th graduation

Engine with A/C compressor 7th graduation

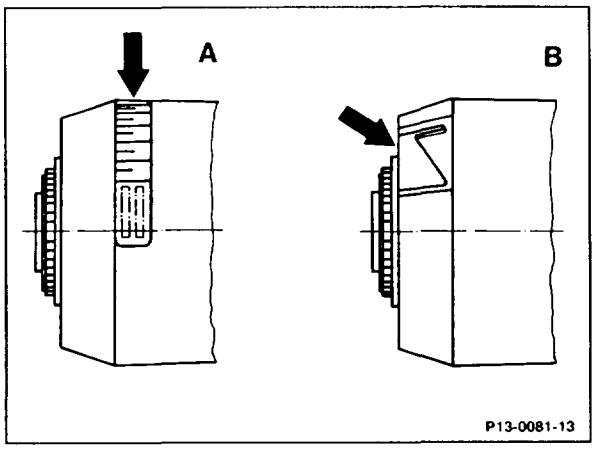

13–3430 Checking poly-V-belt, typical damage

Preceding work:
Warning instructions when hood open (01-0085).

Operation no. of operation texts and work units or standard texts and flat rates

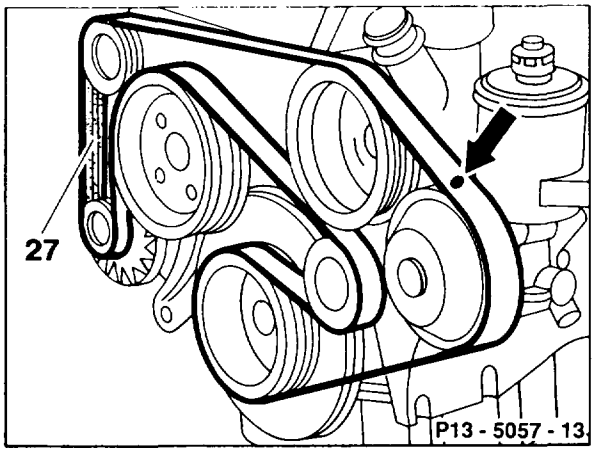

Checking

Poly-V-belt (27)	mark at clearly visible point with chalk (arrow).
Engine	crank in stages with starter (01–0110).
Poly-V-belt (27)	check for signs of damage.
Complete procedure once marking (arrow)	is again visible (one full belt revolution).

Typical damage

- The poly-V-belt must be replaced (subject to separate repair order) if the following types of damage occur:
  Rubber lumps in base of rib (C), depressions from dirt or grit (D).

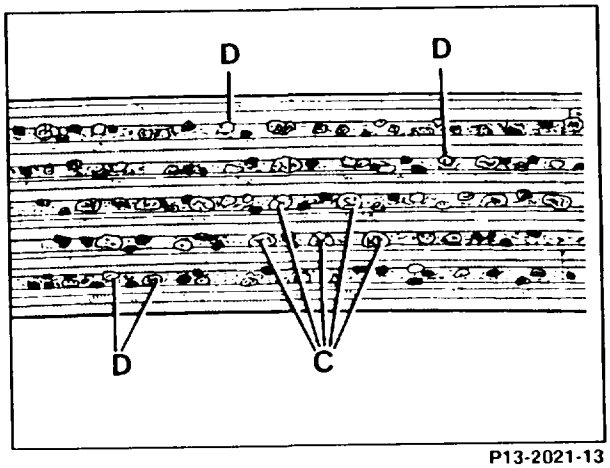

P13-2021-13

- Wear to flanks (F),
  ribs are pointed – trapezoidal in shape when new (E) and strand visible in base of rib (G, brighter points).

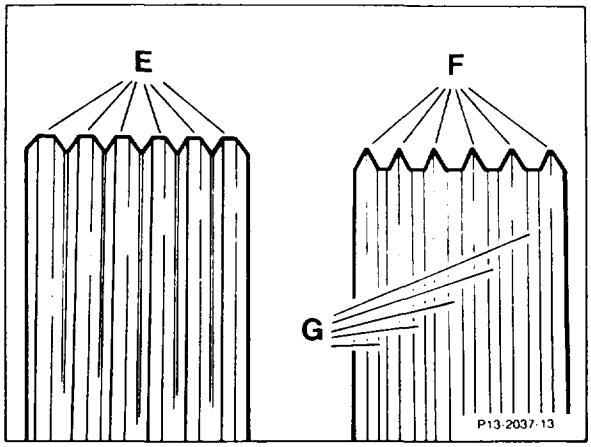

- Transverse splits (H) in several ribs.

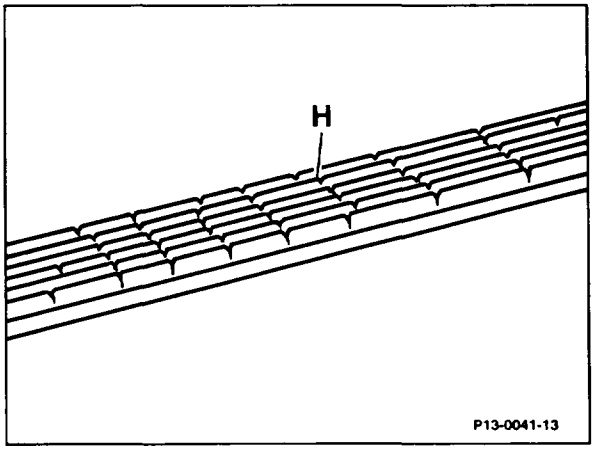

- Ribs detach from base of belt (arrow).

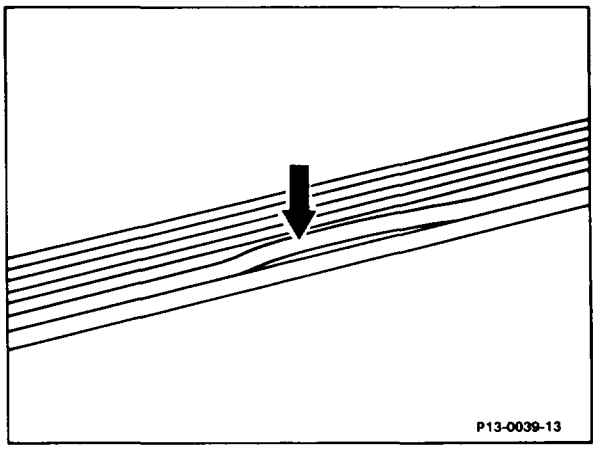

- Transverse splits in ribs (H) and/or rib material broken out (J).

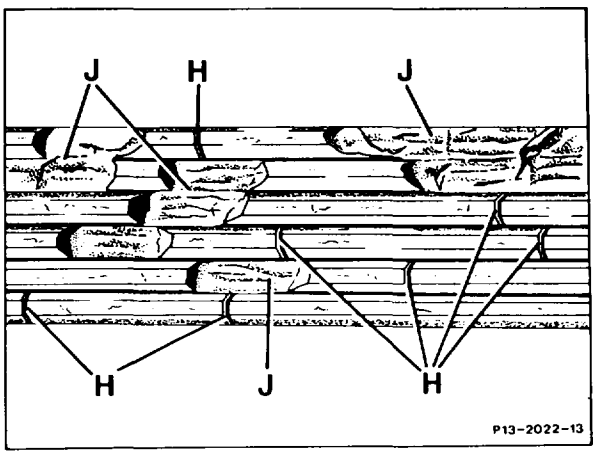

- Strand torn at side (K) or fraying (L) of outer strands.

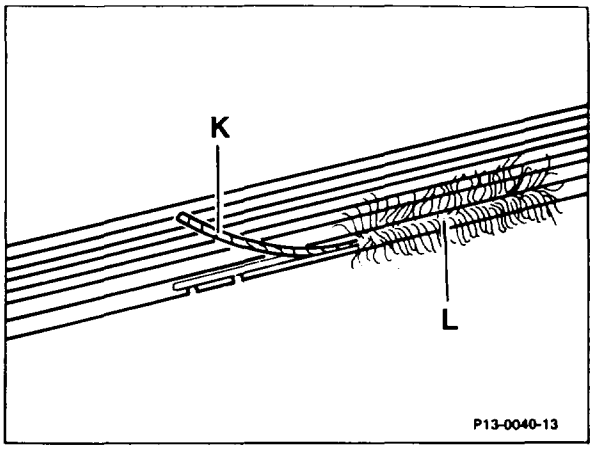

- Transverse splits (M) across the back.

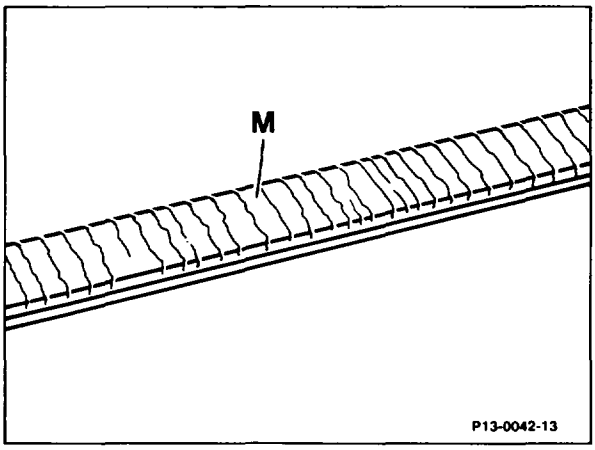

Running diagram of vehicles without air pump and without or with A/C compressor
Belt length: 2170 mm without A/C compressor,
Belt length: 2257 mm with A/C compressor.

1 Tensioning pulley
2 Crankshaft
3 A/C compressor
5 Fan
8 Alternator
9 Top guide pulley
10 Power steering pump
11 Coolant pump

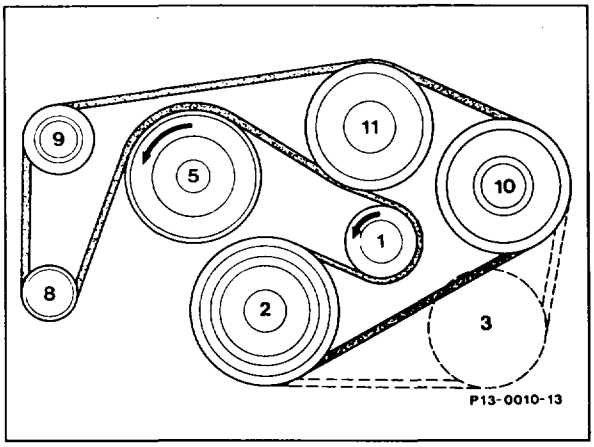

Running diagram of vehicles with air pump and without or with A/C compressor
Belt length: 2330 mm without A/C compressor,
Belt length: 2415 mm with A/C compressor.

1 Tensioning pulley
2 Crankshaft
3 A/C compressor
5 Fan
7 Air pump
8 Alternator
9 Top guide pulley
10 Power steering pump
11 Coolant pump

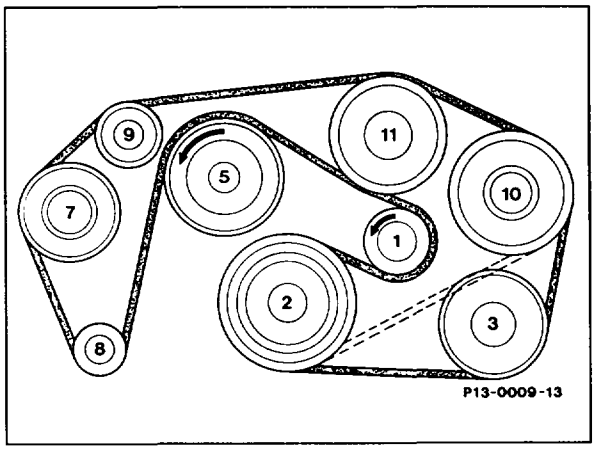

Running diagram with 2nd alternator
Belt length: 2245 mm without AC compressor,
Belt length: 2330 mm with AC compressor.

1 Tensioning pulley
2 Crankshaft
3 AC compressor
5 Fan
8 Alternator
9 Top guide pulley
10 Power steering pump
11 Coolant pump
12 2nd alternator

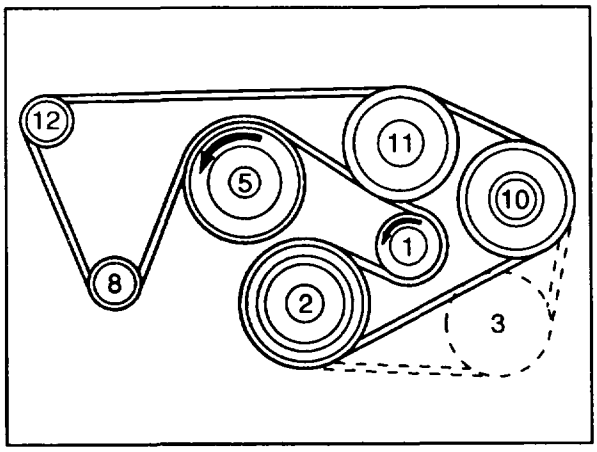

P13-5130-13

13–3450 Removing and installing tensioning device

Preceding work:
Fan shroud removed (20–3400).
Viscous fan clutch removed (20–3120).
Intake air guide removed.

Operation no. of operation texts and work units or standard texts and flat rates
13–1202 – 13–4001

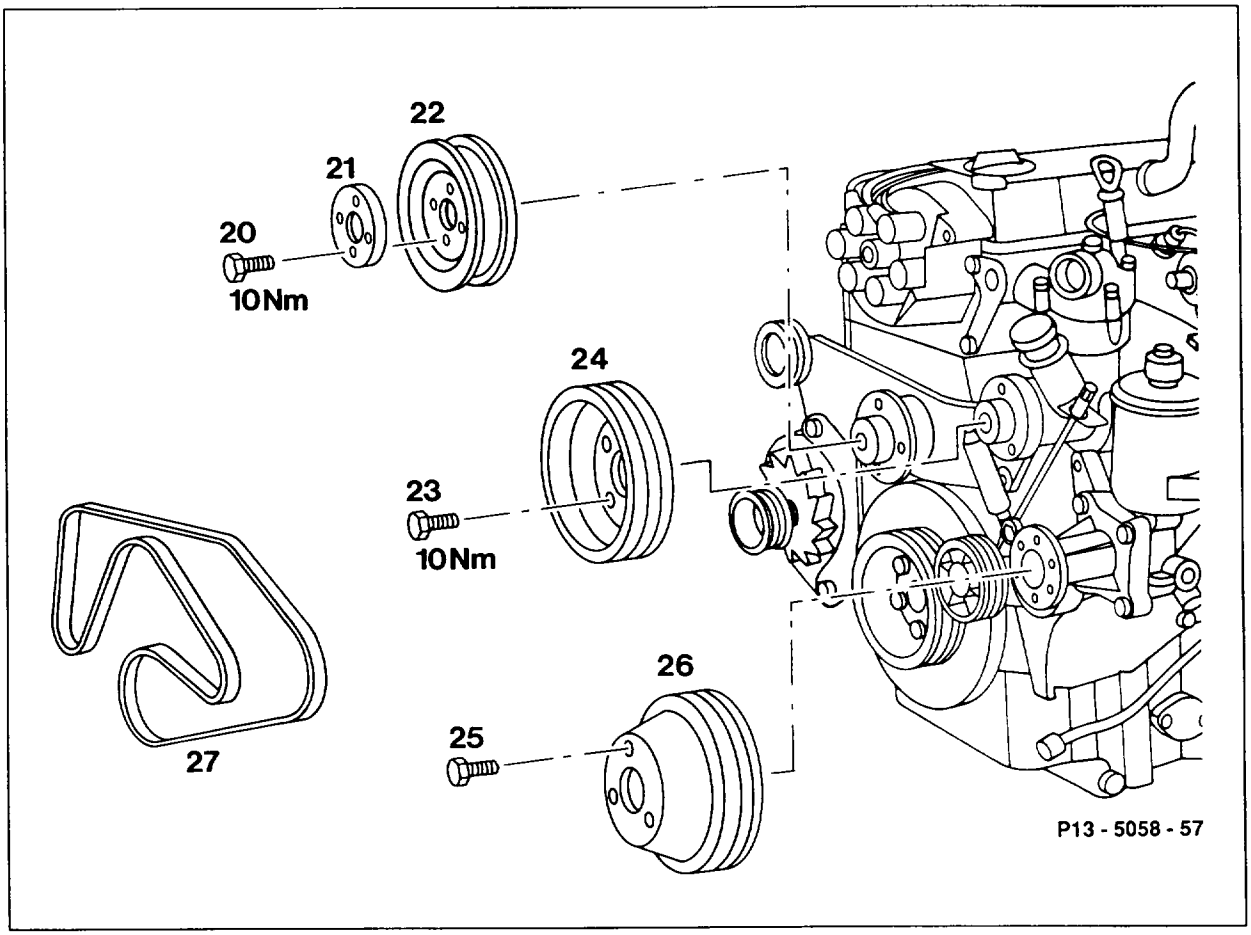

Bolts (20), (23) and (25) of belt pulleys viscous fan clutch (22), coolant pump (24) power steering pump (26)	slacken before removing poly-V-belt, tighten. **Installation note** Torque of power steering pump bolt (25) see (46–710).
Poly-V-belt (27)	remove, install (13–3420).
Belt pulleys of viscous fan clutch (22), coolant pump (24) power steering pump (26)	remove, install.

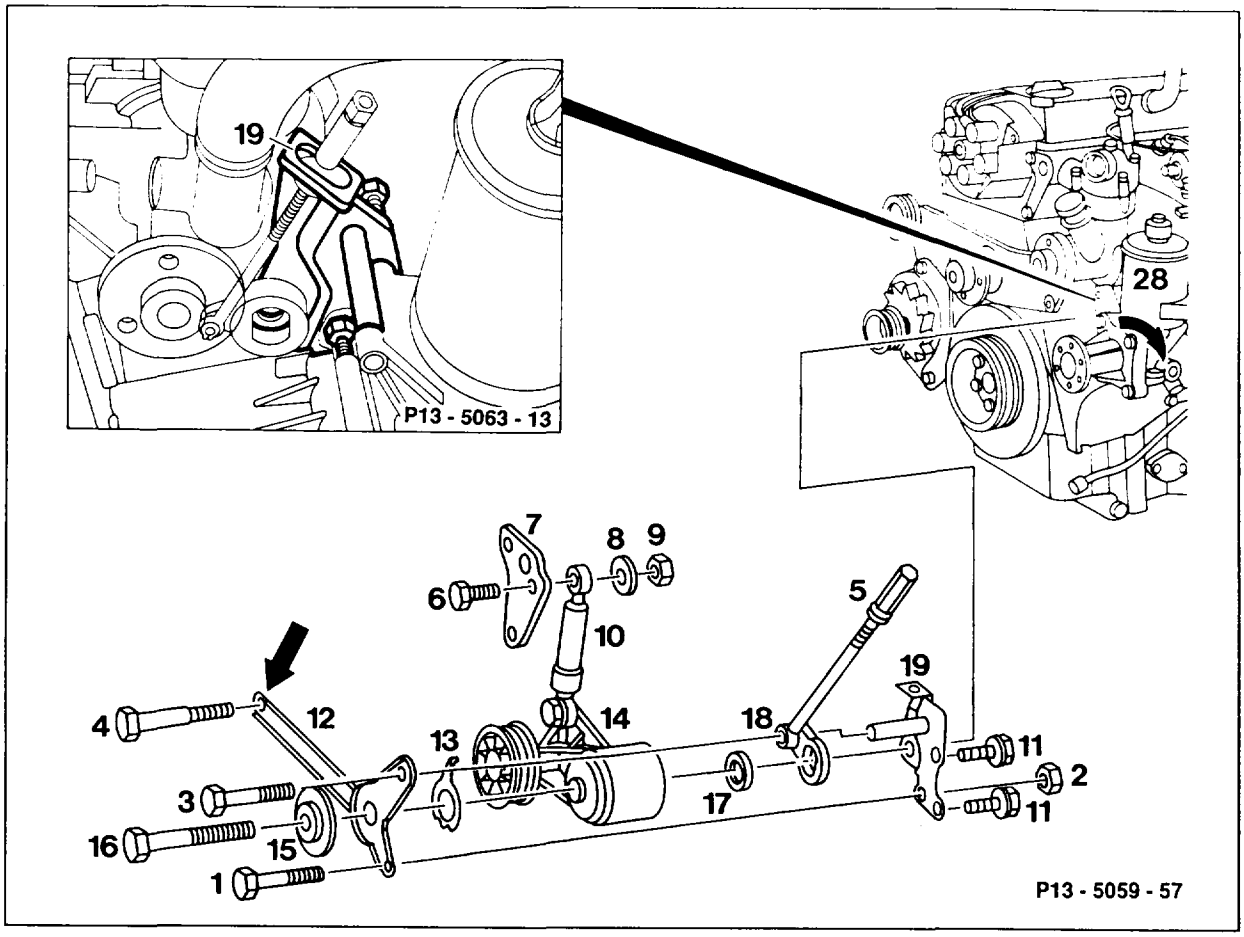

1 M8 × 90 hexagon bolt
2 M8 nut
3 M8 × 100 hexagon bolt
4 M8 × 65 fit collar bolt
11 M8 × 45 bolt + washer

Damper (10) of tensioning device at bracket (7) . .	unscrew, screw on (21 Nm).
Bolt (16)	unscrew, screw on (75 Nm).
Bolts (1), (3) and (4)	unscrew, screw on (21 Nm). **Note** Counter-hold at nut (2) with wrench.
Strut (12)	remove, install. **Installation note** Apply sealant 001 989 29 20 at hole (arrow) of strut (12) at front and rear.
Bolt (16), washer (15), setting pointer (13), tensioning device (14) and sleeve (17)	remove, install.
Bolts (11)	unscrew, screw on (21 Nm).
Power steering pump (28)	swivel outward.

Bracket (19) with tensioning nut (5) and tensioning bolt (18)	remove, install.
Tensioning device (14)	check (13-3452).

Tightening torques in Nm	
Bolts of belt pulleys of fan clutch in coolant pump	10
Bolt of tensioning device	75
Bolts of strut and bracket	25

Special tool

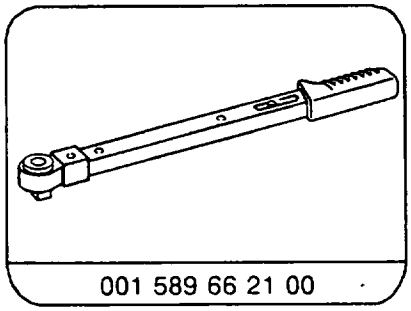

Note

Modification to bracket of poly-V-belt tensioner

The supporting tube (a), previously welded to the bracket, is now fitted loose.

Indefinite production breakpoint as of February 1990.

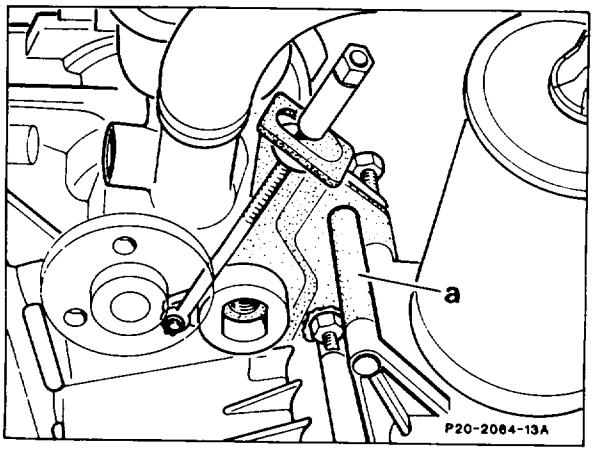

13–3452 Checking tensioning device

Preceding work:
Tensioning device removed (13-3450).

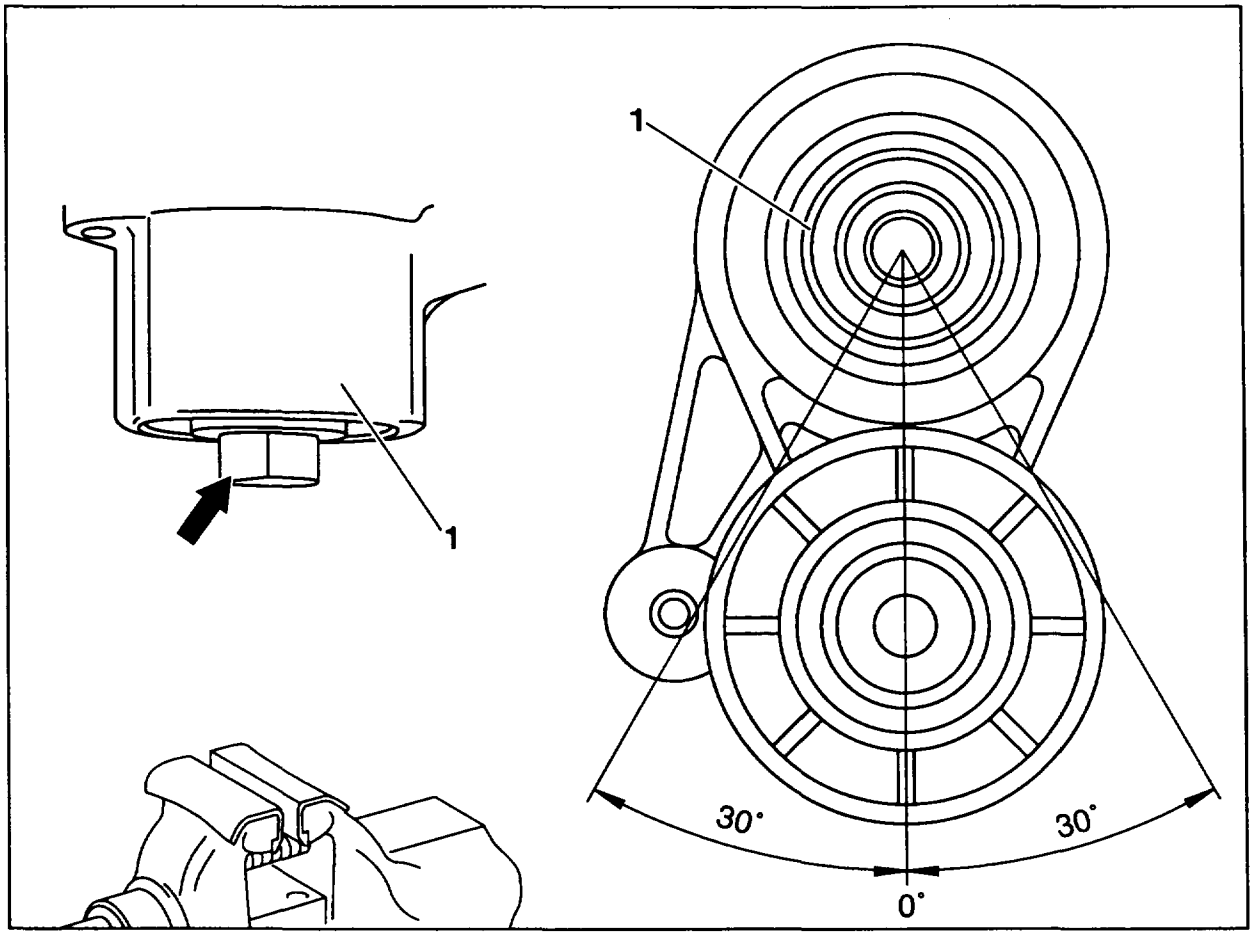

P13-5131-57

Tensioning device (1) . . . . . fix in position at flats (arrow) (eg. vice)
Tensioning device (1) . . . . . turn about 30° to both sides.

Note
The tensioning device (1) must move back into its original position after being turned.

13–3455 Retrofitting shock absorber to tensioning device

Preceding work:
Tensioning device removed (13-3450).

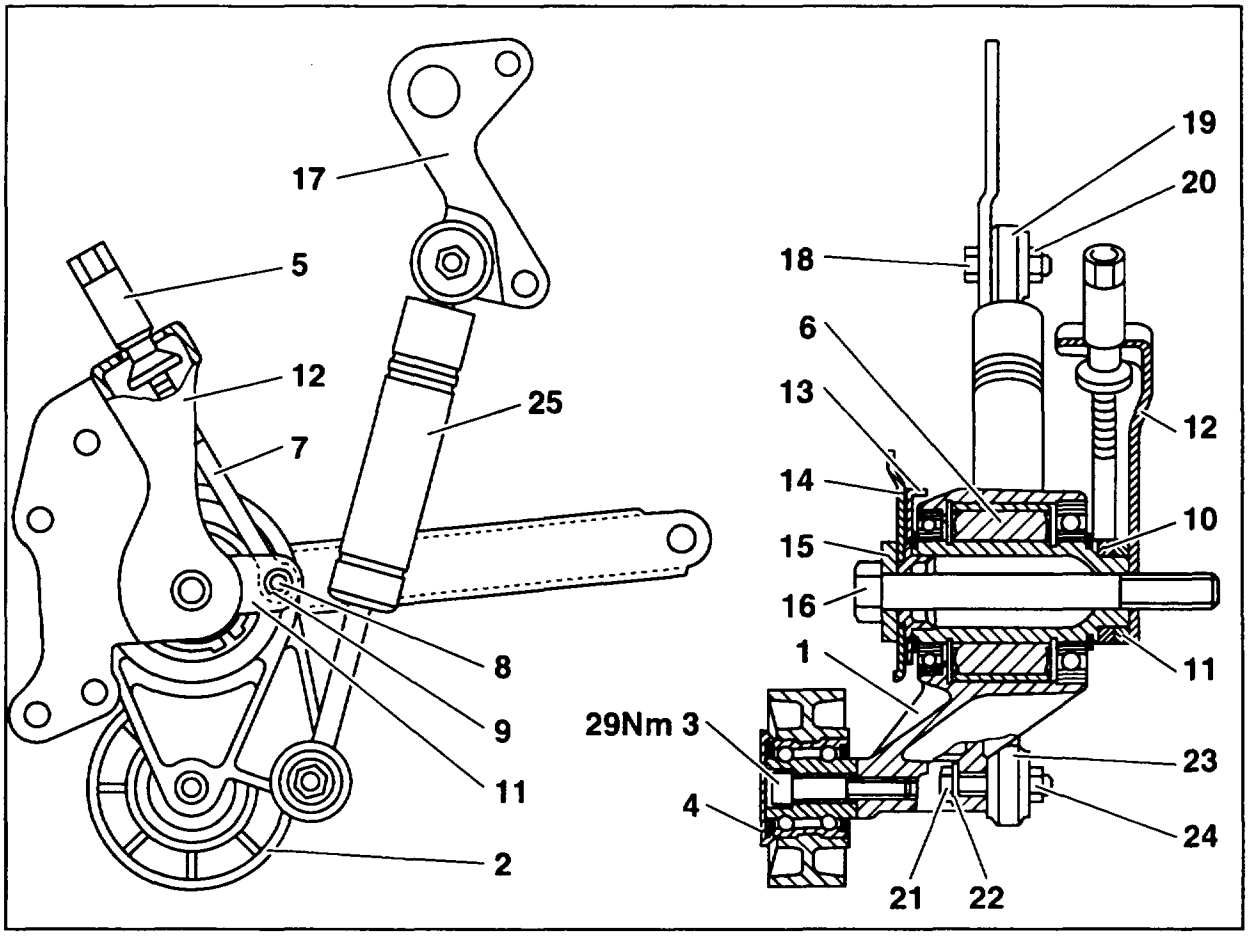

P13-5129-57

1 Belt tensioner
2 Tensioning pulley
3 M8×40 bolt
4 Cover
5 Tensioning nut
6 Tensioning element
7 Tensioning rod
8 Bolt
9 Locking element
10 Spacer ring
11 Driver
12 Rear bracket
13 Setting pointer
14 Bracket with strut
15 Washer
16 M12×120 bolt
17 Bracket
18 M8×30 bolt
19 Washer
20 M8 nut
21 M7×35 bolt + washer
22 Washer
23 Washer
24 M7 nut
25 Shock absorber

Tensioning pulley (2)	bolt to new tensioning device (1) (25 Nm) with retaining eye for shock absorber (25)
Shock absorber (25)	bolt to tensioning device (1)
Bracket (17)	bolt to cylinder head (25 Nm)
Tensioning device	install (13-3450)

13–3460 Removing and installing guide pulley

Preceding work:
Models 124, 201: Viscous fan clutch removed (20–3120).
Model 129: Fan shroud ring removed (20–3400).

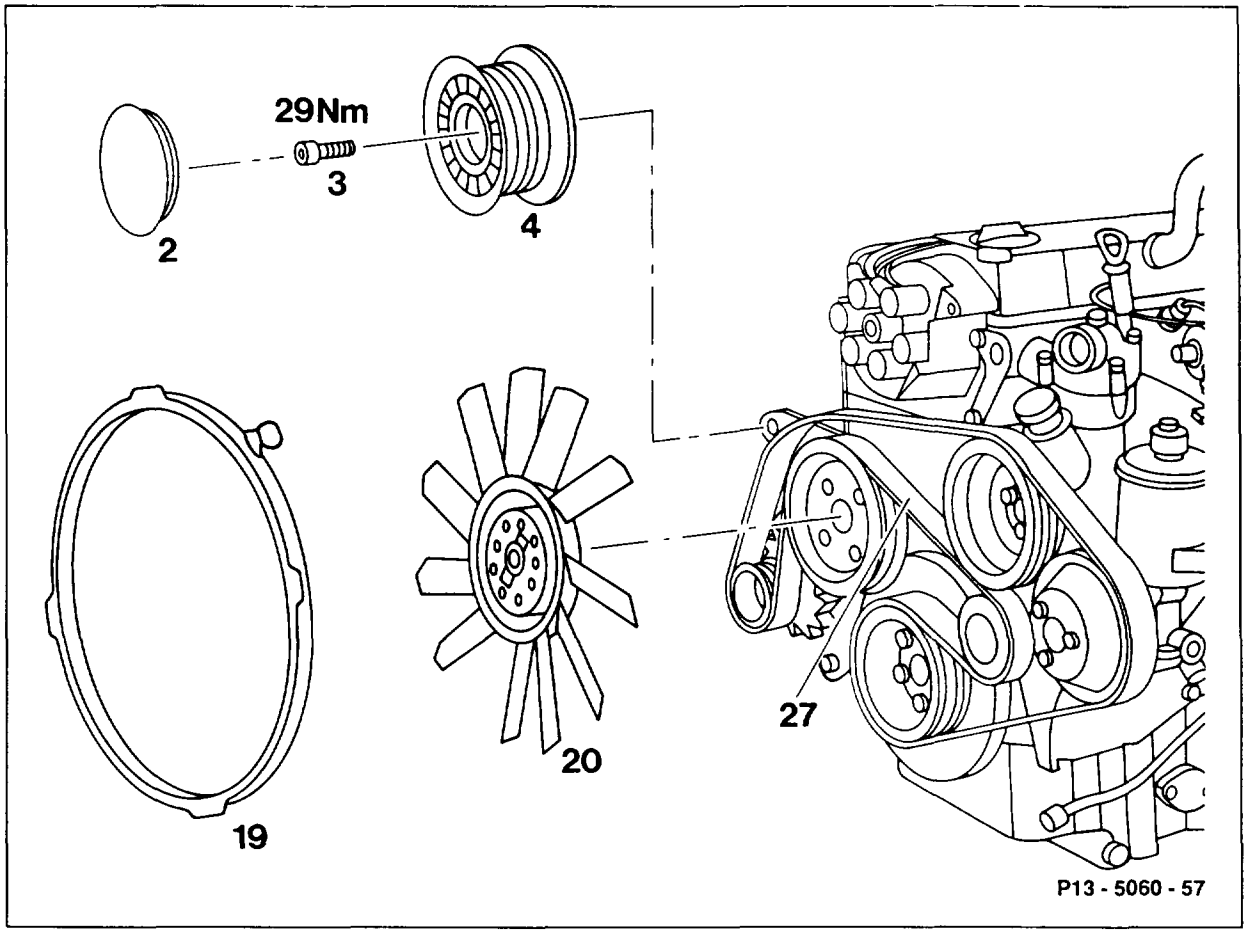

Poly-V-belt (27)	slacken, tension (13–3420).
Poly-V-belt (27)	remove from guide pulley (4), fit on.
Cover (2)	pull off, fit on.
Screw (3)	unscrew, screw on (29 Nm).
Guide pulley (4)	remove from fan bearing bracket, fit on.

Special tool

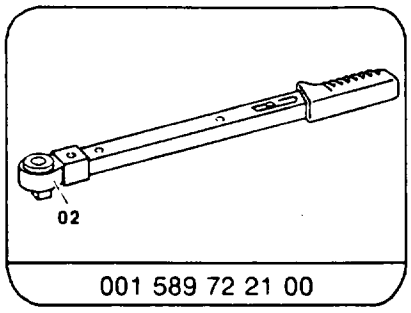

001 589 72 21 00

Replacing oxygen sensor

1480

Engine 102 103 110 116 117 119

Model 123

- Disconnect oxygen sensor connector (arrow).
- Loosen oxygen sensor wire retaining clips.

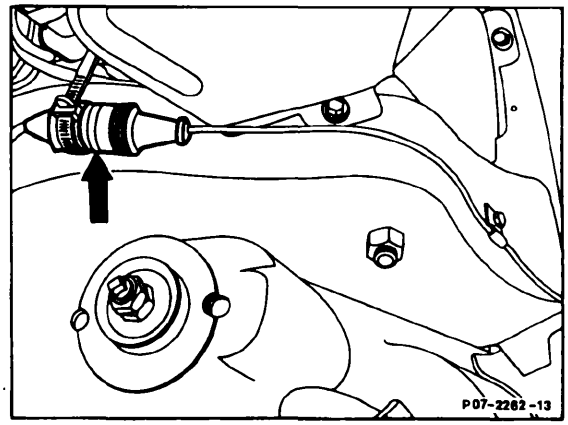

- Unscrew oxygen sensor (16).
- Apply lubricating paste Part no. 000 989 88 51 to threads of new oxygen sensor.
- Install oxygen sensor and torque to approx. 50-60 Nm.
- Remove oxygen sensor warning lamp bulb.

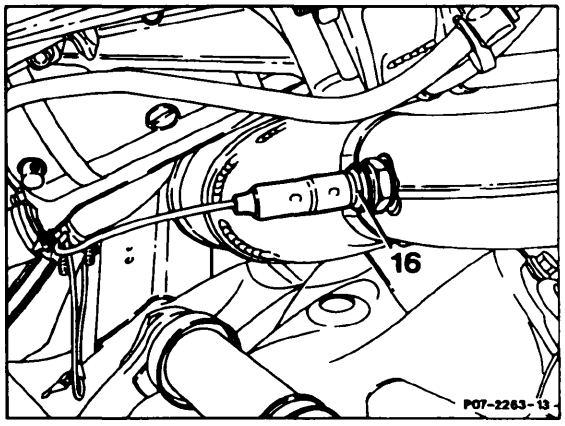

Model 107, 126

- On model 107, push connector upward out of bracket (arrow) and disconnect.

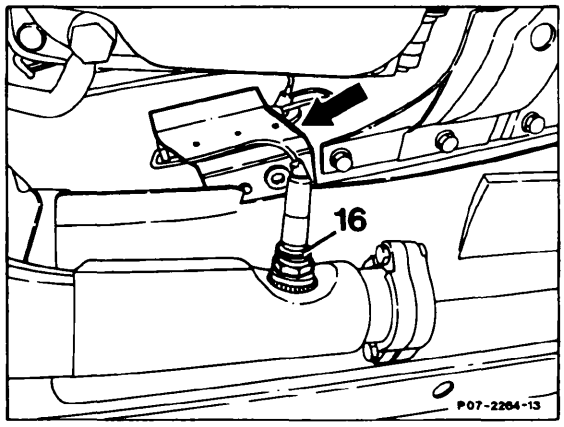

- On model 126, remove bracket (arrow) and push coupling upward, then disconnect. Remove oxygen sensor wire from retaining bracket.
- Unscrew oxygen sensor.

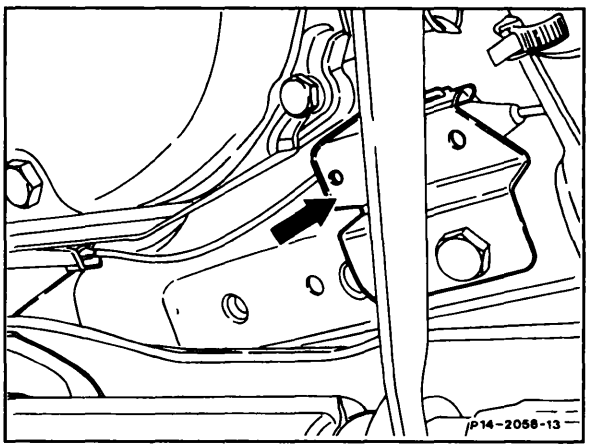

- Apply lubricating paste, part no. 000 989 88 51, to threads of new oxygen sensor.
- Install oxygen sensor and torque to approx. 50-60 Nm.
- Install bracket on model 126, and press wire into retaining strip.
- On 1981-85 models only, remove oxygen sensor warning lamp bulb.

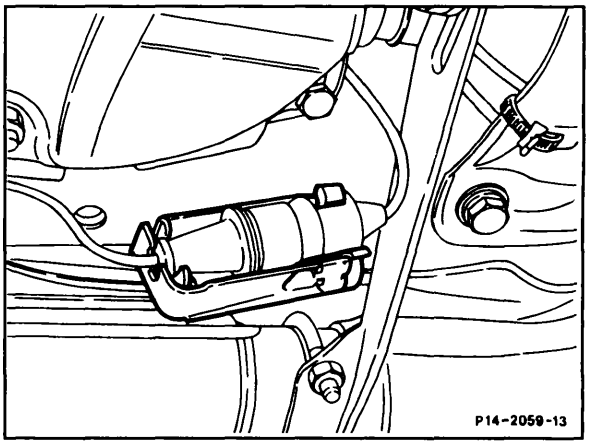

Model 124, 201

- Separate oxygen sensor connector (arrow) and sensor heater connector on right side of vehicle interior.
- Push wire and grommet out through floor pan from inside.

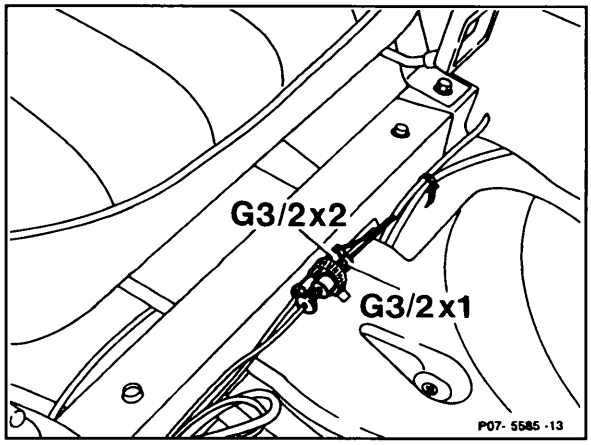

- Remove shield (arrow).
- Unscrew oxygen sensor.
- Apply lubricating paste, part no. 000 989 88 51, to threads of new oxygen sensor.
- Install oxygen sensor and torque to approx. 50-60 Nm.

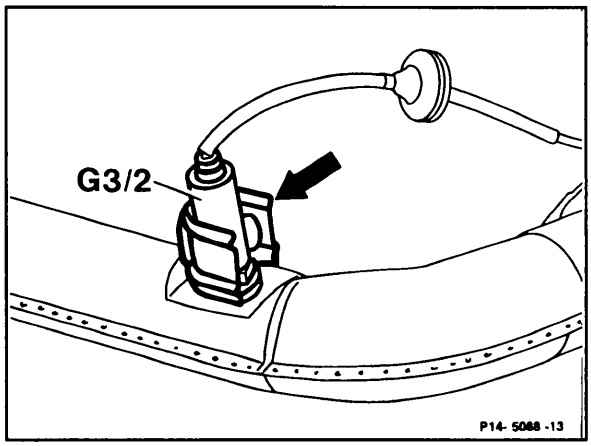

On 1984-86 model 201 only (except 201.034), remove oxygen sensor warning lamp bulb.

Model 129

- The oxygen sensor connector (G3/2x1) is secured to the right side of the transmission tunnel.
- Turn connector nut counterclockwise and separate connector.

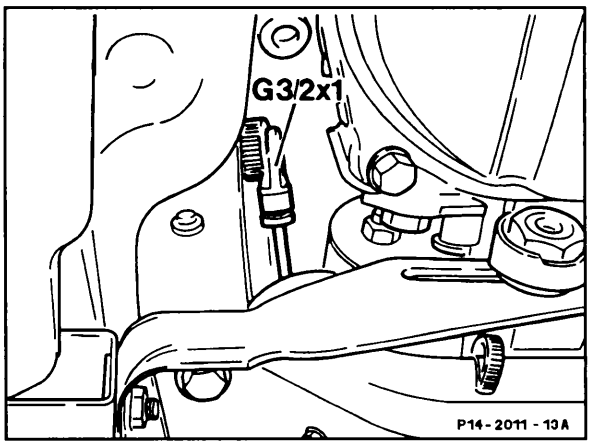

- Unscrew oxygen sensor.
- Apply lubricating paste, part no. 000 989 88 51, to threads of new oxygen sensor.
- Install oxygen sensor and torque to approx. 50-60 Nm.

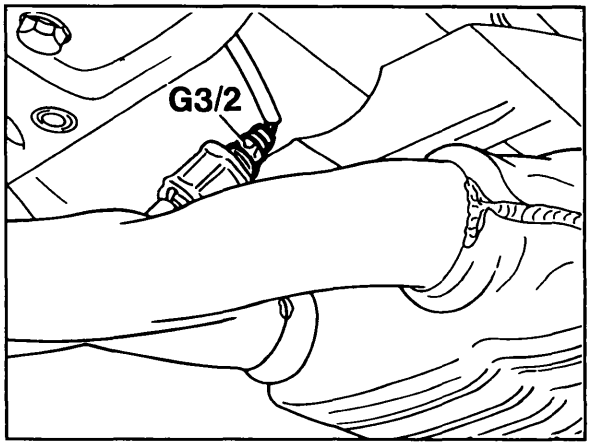

Model 201 with engine 102 California starting model year 1992

- Disconnect oxygen sensor heater coil connector (G3/2x1) and oxygen sensor signal connector (G3/2x2).

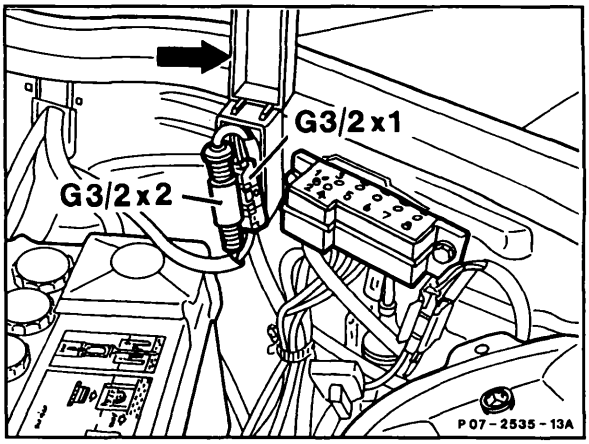

- Unscrew oxygen sensor.
- Apply lubricating paste, part no. 000 989 88 51, to threads of new oxygen sensor.
- Install oxygen sensor and torque to approx. 50-60 Nm.

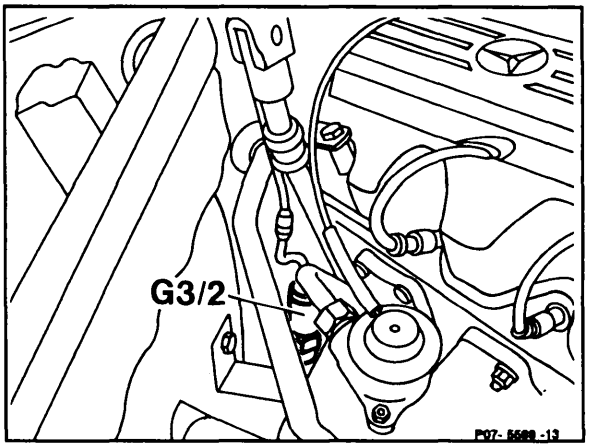

Maintenance note:
The oxygen sensor must be replaced when the warning lamp illuminates for the first time at 60,000 ± 250 miles. After replacing the sensor, the warning lamp may be switched off via the button (arrow) on the oxygen sensor replacement indicator control module (N44/1). The button must be pressed for longer than 2 seconds to turn off the lamp. In ignition/starter position "2", the lamp remains lit even after resetting the control module. The lamp will only go out after the engine is started (circuit 61 recognition). The previously recorded mileage remains stored. The warning lamp will illuminate for a second time at 120,000 miles.

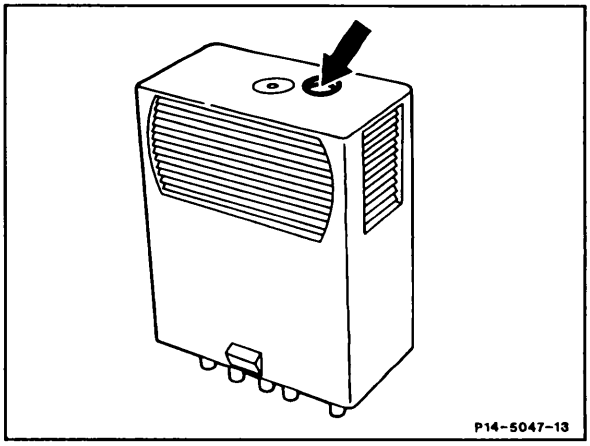

Note:

After the 120,000 mile indication, the on-off ratio should be checked, and the oxygen sensor only replaced if necessary.

If the oxygen sensor is replaced outside of the interval limit, the oxygen sensor replacement indicator control module (N44/1) must be replaced.
Starting model year 1993, the control module can be reset as often as needed.

For identifying the vehicles, an information plate (arrow) listing the principal engine setting data, is affixed to the cross member.

(AUS)	as of 1986
(CH) (S)	as of 1986
Standard/KAT/RÜF	as of 1985

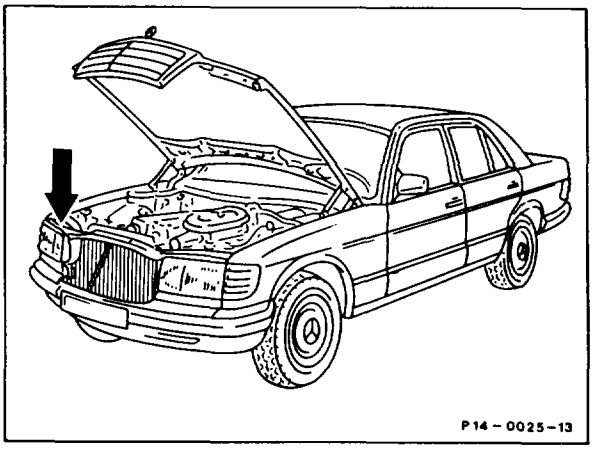

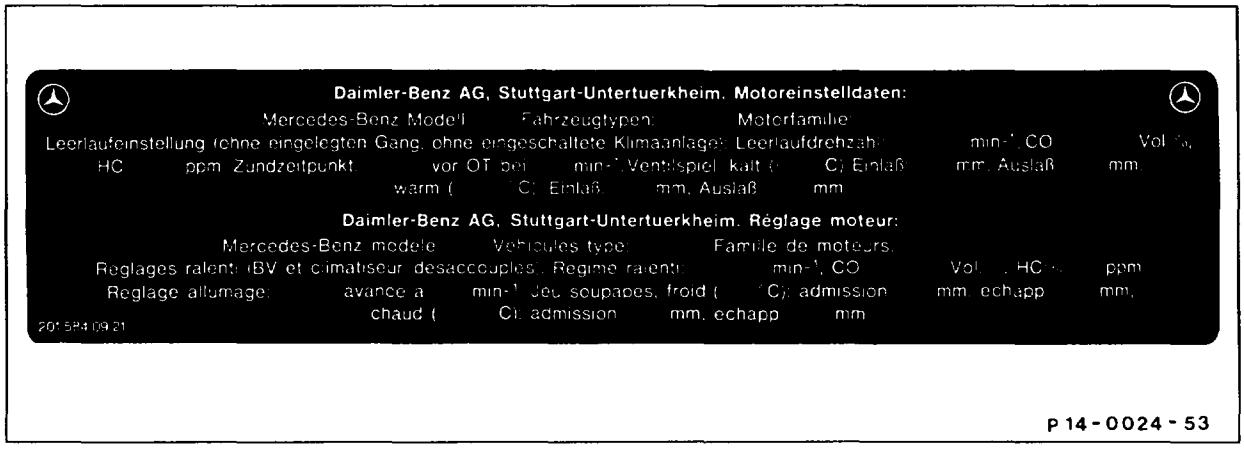

Example: (CH)

Identification of information plates

(AUS)	silver
(CH)	green
(CH) KAT	light green
(S)	blue
(S) KAT	light blue
Standard/KAT/RÜF/without KAT	white

(J) as of 1986

On these vehicles an information plate for the emissions control system is affixed in Japan in the engine compartment in Japanese. This contains the principal engine setting data.

(USA) as of 1986

Information plate for emissions control system on cross member in front of radiator.
The engine recognition data as well as the principal engine setting data are contained on this plate.

The engine recognition data are encoded in a 10-position code.

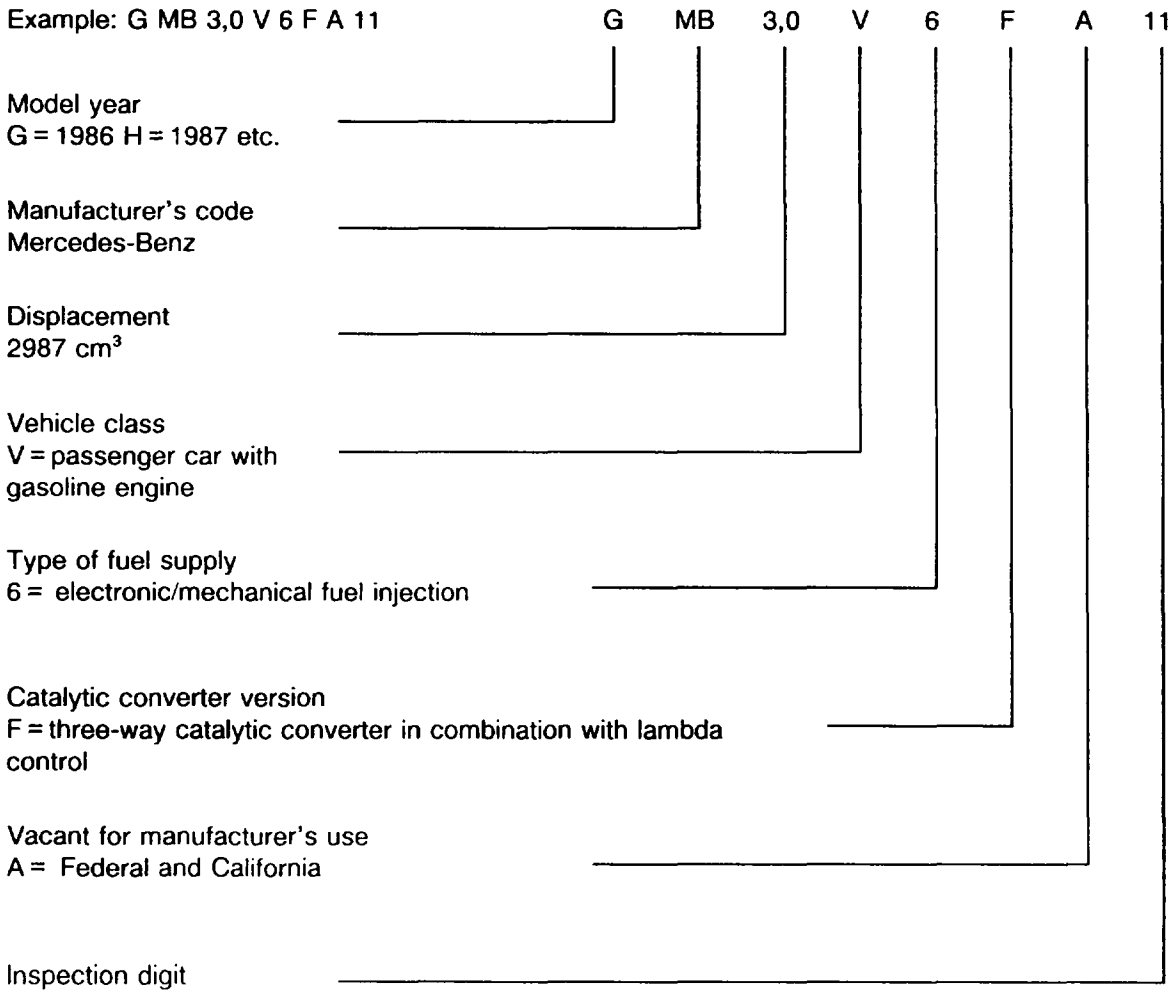

Tourist version

Vehicles in tourist version are equipped as of approx. 05/88 by the manufacturer **with** catalytic converters.

At the customer's request, the vehicle can also be suppled **without** catalytic converters.

Colour code:
- background colour: red
- lettering: silver

When the car is introduced into the USA, the catalytic converters must be installed.

Conversion measures see 14–0490.

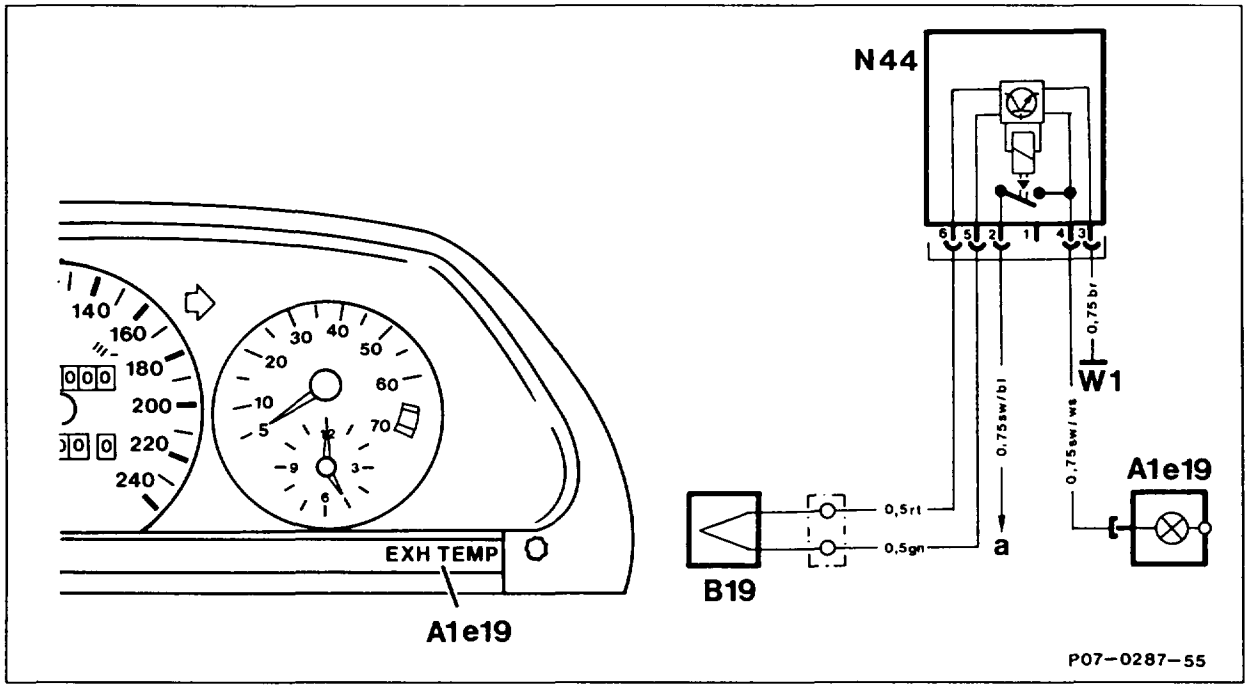

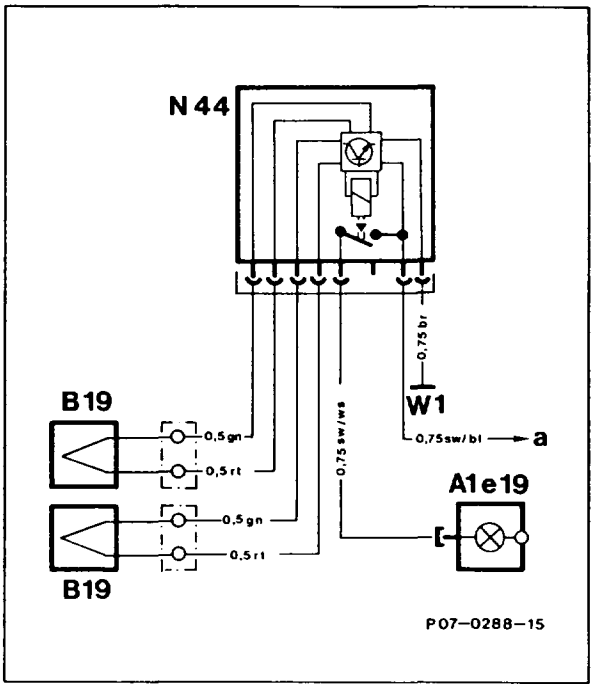

A1e19	Catalytic converter overheating warning lamp
B19	KAT temperature sensor
N44	KAT warning control unit
W1	Main ground **Model 126:** behind instrument cluster **Model 107:** right footwell, right cross member
a	To fuse, terminal 15

Commercially available tools and testers

Designation	e.g. Make, order no.
Multimeter	Sun, DMM-5

Symbols for testers

—c Contact
—▬ Connector
⊥ Ground

Symbols for test mode with multimeter

Multimeter
DC voltage mode

Multimeter
Resistance mode

Preconditions for test

- Battery voltage 11–14 V

See corresponding wiring diagram volume for appropriate wiring diagrams.

Note

If the specification of a main test step, e.g. test step 1.0, is in order, proceed with the next main test step, e.g. test step 2.0.
If the specification in the main test step, e.g. test step 1.0, is not achieved, continue test with sub-test step, e.g. test step 1.1.

Test step	Test scope	Test connection	Operation/ Requirement	Specification	Possible cause/Remedy
1.0	**Warning lamp (A1e19)**	Visual check	Ignition: **ON**	Warning lamp (A1e19) lights up for 5–10 s	Warning lamp (A1e19) does **not** light up: Remove warning lamp, test or replace. Warning lamp (A1e19) does **not** go out after 5–10 s: ⇒ 2.0

Test step	Test scope	Test connection	Operation/ Requirement	Specification	Possible cause/Remedy
1.1	Voltage at warning lamp (A1e19) test sw/ws cable		Ignition: **ON** Cable disconnected	11–14 V	Warning lamp (A1e19) has no ground, Open circuit in wiring Cable (A1e19) → (N44)
1.2	Cable	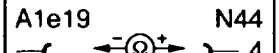	Ignition: **OFF** KAT warning control unit (N44) disconnected	< 1 Ω	Open circuit in wiring
1.3	Voltage supply of KAT warning control unit (N44)		Ignition: **ON** KAT warning control unit (N44) disconnected	11–14 V	Open circuit in wiring from and to fuse terminal 15, Fuse faulty, Open circuit in wiring cable (N44) contact 3 → W1
2.0	**KAT temperature sensor (B19)**		Ignition: **ON**	Warning lamp (A1e19) lights up for 5–10 s	Warning lamp (A1e19) does **not** go out after 5–10 s: Open circuit in wiring cable (B19) → (N44) contact 5, Open circuit in wiring cable (B19) → (N44) contact 6, KAT temperature sensor (B19) faulty.

Test step	Test scope	Test connection	Operation/ Requirement	Specifi-cation	Possible cause/Remedy
2.1	Cable	B19 — Ω — N44 — 5	Ignition: **OFF** Plug connection disconnected	< 1 Ω	Open circuit in wiring
2.2		B19 — Ω — N44 — 6	Ignition: **OFF** Plug connection disconnected	< 1 Ω	Open circuit in wiring

Models 126.024

The shape of the coupling has been modified with production breakpoint 01/89 as of vehicle ident end no. A 460656.

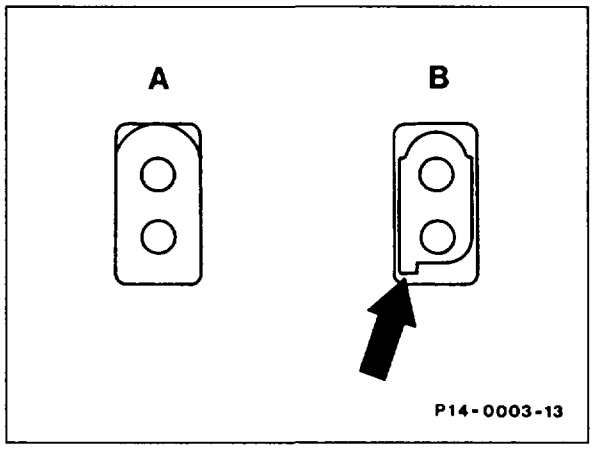

A Previous version
B Present version with plug lock (arrow)

Note

To test the operation of the warning system, the wiring to the KAT temperature sensor (B19) can be disconnected. The warning lamp must light up.

Task, components, function description, see function of emissions control system (Repair Instructions KE Injection System Combustion II, 14–0030).

14–0116 Testing oxygen sensor failure indicator (USA)

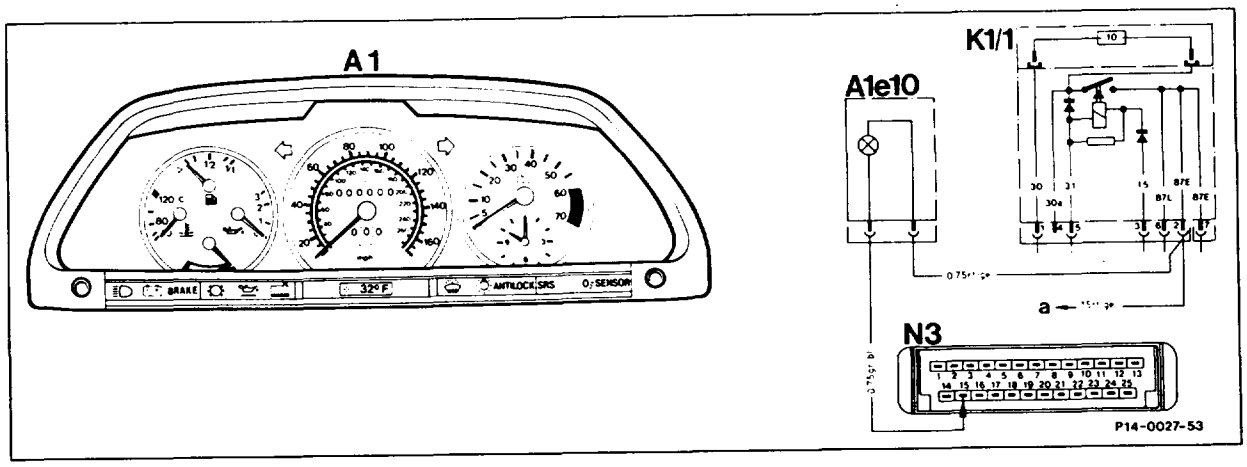

A1	Instrument cluster	K1/1	7-pin overvoltage protection relay 87E
A1e10	Oxygen sensor indicator lamp, up to model year 1987. As of model year 1988 CHECK ENGINE indicator lamp (A1e26).	N3	KE control unit
		a	To KE control unit (N3) contact 1

Special tools

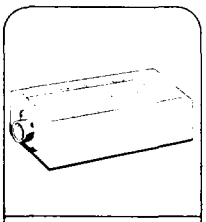

124 589 00 21 00
54

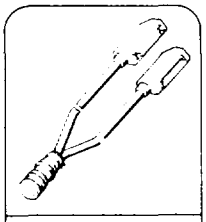

124 589 33 63 00
07 28 54

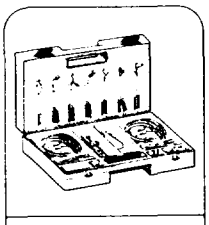

201 589 00 99 00
15 54

Commercially available tools and testers (see Workshop Equipment Manual)

Designation	e.g. Make, order no.
Multimeter	Sun, DMM-5

Symbols for testers

Contact box
 Contact
 Connector
Ground

Preconditions for test

- Battery voltage11–14 V

See appropriate wiring diagram volume for wiring diagrams.

Symbols for test mode with multimeter

Multimeter
DC voltage mode
Multimeter
Resistance mode

Note

If the specification of a main test step, e.g. test step 1.0, is in order, proceed with the next main test step, e.g. test step 2.0.
If the specification of a main test step, e.g. test step 3.0, is not achieved, continue test with sub-test step, e.g. test step 3.1.

As of model year 1992 the CHECK ENGINE indicator lamp (A1e26) for (USA) Federal is no longer fitted.

Test step	Test scope	Test connection	Operation/ Requirement	Specification	Possible cause/Remedy
1.0	**Oxygen sensor failure indicator** [1])	Visual check	Ignition: **ON**	Oxygen sensor indicator lamp [1]) (A1e10) lights up **briefly**.	Indicator lamp faulty, oxygen sensor indicator lamp (A1e10) [1]) has no voltage, Open circuit in wiring cable (A1e10) → (N3) contact 15, Test KE control unit

[1]) As of model year 1988: CHECK ENGINE failure indicator (A1e26).

Test step	Test scope	Test connection	Operation/ Requirement	Specification	Possible cause/Remedy
2.0	**Oxygen sensor indicator lamp (A1e10) [1] voltage supply**	A1e10 ⊥ (V) rt/ge	Ignition: **ON**	11–14 V	Open circuit in wiring, Overvoltage protection relay (K1/1)
3.0	Cable [1]	A1e10 N3 gr/bl (Ω) 15	Ignition: **OFF**	< 1 Ω	Open circuit in wiring
4.0	**CHECK ENGINE indicator lamp (A1e26) [2]**	A1e26 ⊥ (V) rt/ge	Ignition: **ON**	11–14 V	Open circuit in wiring, Overvoltage protection relay (K1/1)
4.1	Cable [2]	A1e26 N3 gr/gn (Ω) 15	Ignition: **OFF**	< 1 Ω	Open circuit in wiring

[1] Up to model year 1987.
[2] As of model year 1988.

Oxygen sensor failure indicator (USA) as of model year 1986

A failure of the oxygen sensor is indicated in the instrument cluster (A1) by the oxygen sensor indicator lamp (A1e10) lighting up or, as of model year 1988 CHECK ENGINE indicator lamp (A1e26). The indicator lamp is actuated by the KE control unit.

Note

When the ignition is switched on, the indicator lamp lights up briefly.

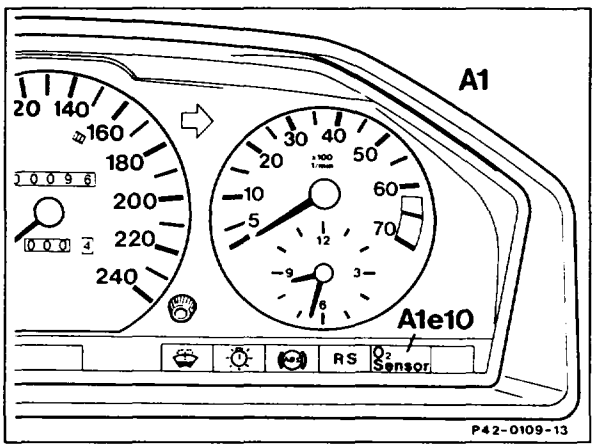

As of model year 1988 the O_2-SENSOR indicator lamp in the instrument cluster has been replaced by the CHECK ENGINE indicator lamp.

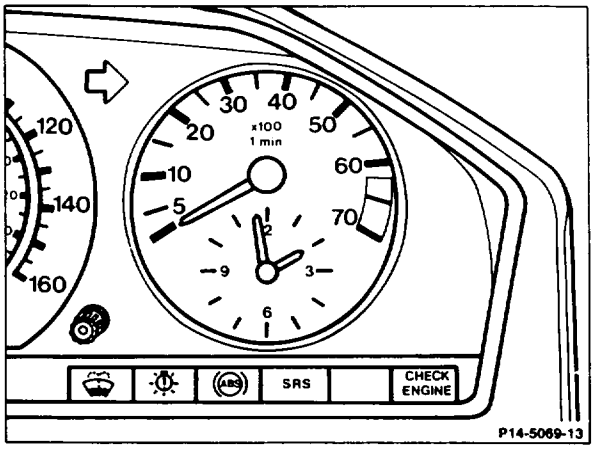

Tourist vehicles have been supplied since 05/88 with a catalytic converter. The difference to the USA version consists of the ignition system and the information plate for the emissions control system on the radiator cross bar.

The tourist vehicles must be converted as follows in the VPCs:

A. Replacing reference resistor/resistance coupling of ignition system
B. Replacing spark plugs
C. Testing exhaust system and oxygen sensor for lead residues with Plumbtesmo test paper
D. Replacing information plate for emissions control system on radiator cross bar
E. Function test

A. Replacing reference resistor of ignition system

The reference resistor (R16/1) is incorporated in the wiring harness.

Untie wiring harness and install reference resistor part no. 000 540 24 81 (up to 09/89). Attach reference resistor separately.

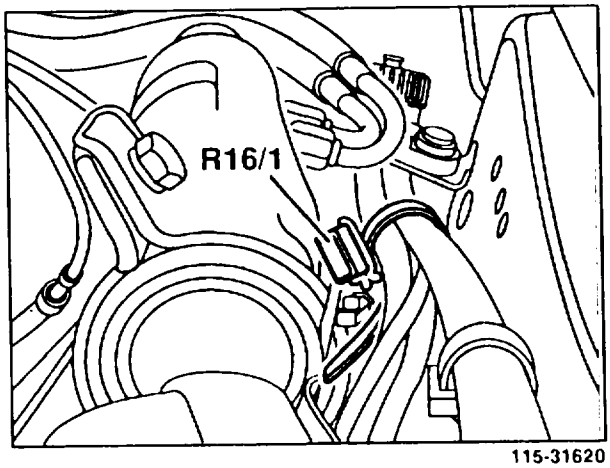

115-31620

Model 107
Location of reference resistor (R16/1)

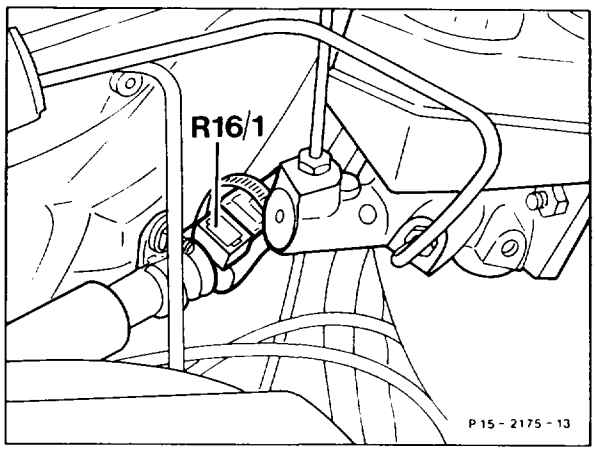

Model 124
Location of reference resistor (R16/1)

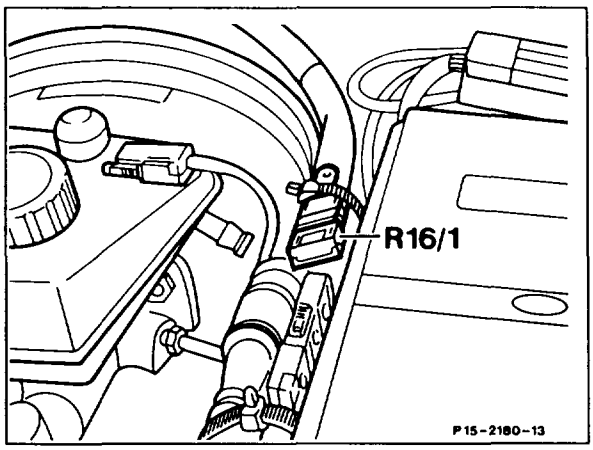

Model 126
Location of reference resistor (R16/1)

On model 201.029, remove and install air cleaner.

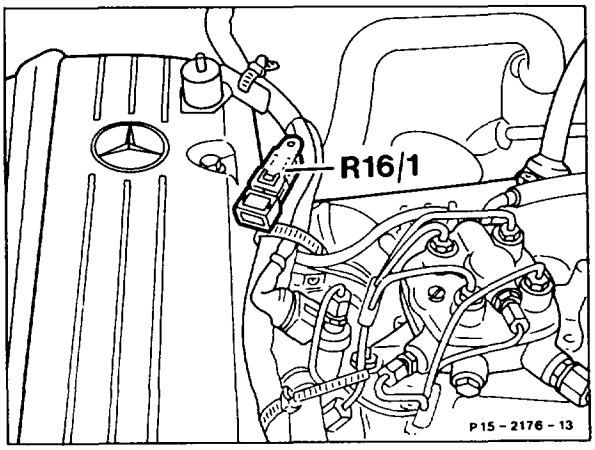

Model 201
Location of reference resistor (R16/1)

B. Replacing spark plugs

Install spark plugs as stated in the table.

Tightening torque with tapered seat 10 – 20 Nm

Permissible top speed max. 160 km/h (100 mph)

Table of spark plugs

	Engine 103
BERU	14K-9DU or 14K-9DUO
BOSCH	H9DC or H9DCO
CHAMPION	S12YC or S12YCC

C. Testing exhaust system and oxygen sensor for lead residues with Plumbtesmo test paper

Fuels containing lead impair the operation of the oxygen sensor and the catalytic converters. For this reason, it is necessary to verify that the vehicle has been operated with unleaded fuel. Adopt the following procedure in order to perform this check:

- Engine switched off, exhaust tailpipe and oxygen sensor must be warm (not glowing hot). Remove oxygen sensor and install (see 07.3–5303).
- Moisten Plumbtesmo test paper with 2 drops of distilled water and press with your thumb against the inner wall of the exhaust tailpipe for about 2 minutes or place test paper around the protective grille of the oxygen sensor and likewise press for about 2 minutes.
- Remove test paper and assess (see table).

Color	Analysis
unchanged	no lead residues, test negative
pink	very slight lead residues, test negative (unleaded fuels may contain up to 0.015 g lead per liter); no impairment of operation
red	lead residues too high, test positive; test must be repeated

Note

As the lead test is very sensitive, it is very important to ensure that positive indications of lead do not occur erroneously by entraining traces of lead. For this reason, after each positive test, it is recommended to wash your hands or to wear disposable gloves. Test papers which have dropped onto the ground must not be re-used as the dust may contain traces of lead.

If the test paper again colors red after repeating the test, the oxygen sensor or the catalytic converter system must be replaced.

D. Replacing information plate for emissions control system on radiator cross bar

Pull off information plate "CATALYST APPROVED FOR IMPORT" on radiator cross bar. Clean contact surface. Affix information plate for emissions control system "CATALYST".

E. Function test

Note
If the test data are not achieved by adjustment, the test procedure must be interrupted. Rectify any faults as specified in the repair instructions.

Test procedure:

Connect testers for oil temperature, engine speed, ignition angle and lambda control.

Warm up vehicle on the roller dynamometer at part load in position D or 3rd gear (60 km/h, about 25 kW). Engine oil temperature about 80 °C.

1 Check that the accelerator control linkage operates freely and is correctly set.

2 Test the air injection system:
Start engine and at the same time observe the air pump.
The air pump must run briefly when the engine is started.

3 Test exhaust gas recirculation system:
Connect vacuum tester with Y union to the exhaust gas recirculation valve. Increase engine speed to 3200 rpm.
Specification: >400 mbar.

4 Test ignition angle:
Engine idling,
specification with vacuum: 7 – 11° before TDC.

5 Test idle speed:
AC off, parking brake applied.
Specification for engine 103.94 position P/N: 650 – 750 rpm
Specification for engine 103.98 position P/N: 600 – 700 rpm
Specification position D: 550 – 650 rpm

6 Test regeneration valve:
Disconnect pipe from the activated charcoal filter at the regeneration valve and connect vacuum tester to regeneration valve.
Specification at 2500 rpm: >400 mbar.

7 Test lambda control (see 07.3–1100):

8 Test Check-Engine display (n.a. as of model year 1992 on vehicles in Federal version):
Switch off engine, disconnect testers.
Switch on ignition → Check-Engine lamp on
Start engine → Check-Engine lamp off

Special tools

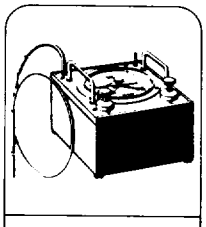

201 589 13 21 00
00 42 80

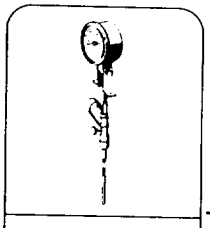

124 589 07 21 00
18

Lambda-Regelungs-tester

909 589 00 21 00

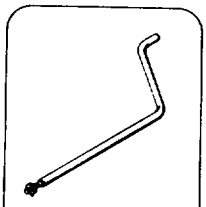

123 589 09 63 00
03

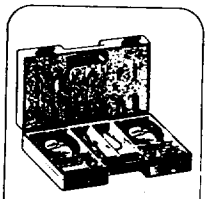

201 589 00 99 00
15 54

Commercially available testers (see Workshop Equipment Manual)

Designation	
Engine tester (rpm, dwell angle, ignition angle)	e.g. Bosch, MOT 001.03 Sun, Hermann
Plumbtesmo test paper	available from the trade

14–1310 Removing and installing intake manifold, replacing gasket

Preceding work:
Removing and installing, replacing air cleaner (09–1051).

Operation no. of operation texts and work units or standard texts and flat rates:
14–1310.

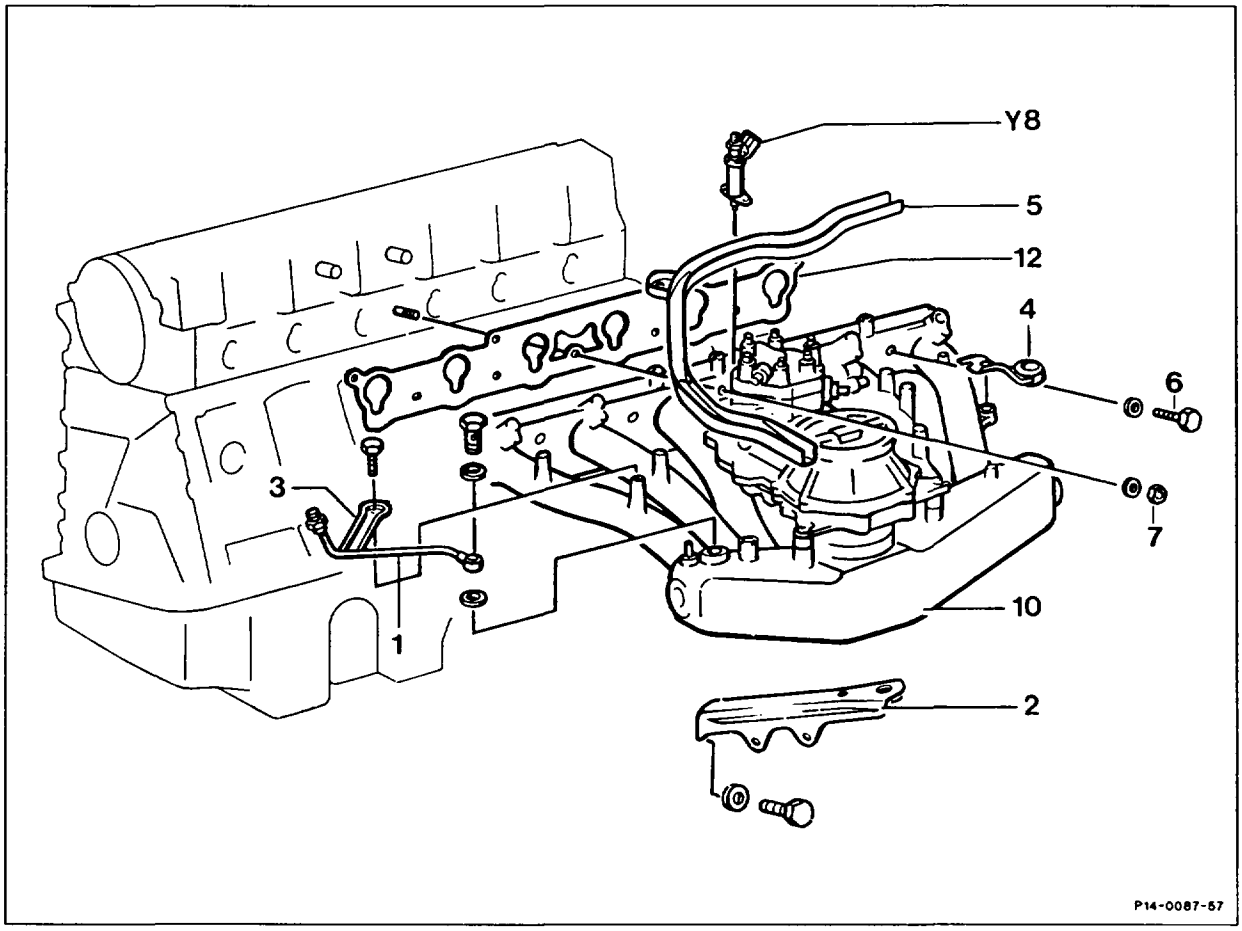

Ground cable at battery	disconnect, connect.
Engine compartment panel	take off, fit on.
Plastic rail (5) for engine wiring harness	remove, install.
Mixture control unit with air guide housing	remove, install (07.3–1668).
Holder for starter cable (4)	detach, fit on.
Vacuum connections at intake manifold and throttle valve body	pull off, fit on.
Vacuum line (1) for brake booster with holder (3)	remove, install.

Start valve (Y8)	remove, install. Detach electrical connection to engine, fit on.
Bowden cable for accelerator control or for automatic transmission	detach, attach.
Supporting bracket (2) for intake manifold	take off, fit on. Take off both supporting brackets at intake manifold, fit on, slacken at crankcase, attach.
	Note On vehicles with Tempomat cruise control, take off bracket with Tempomat cruise control, fit on.
Protective cap at ignition coil	take off, install.
On vehicles with level control	take off suction hose by slackening hose clip, tightening and detaching hose clip from line, fitting on.
Bolts (6) and nuts (7)	unscrew, screw on.
Intake manifold (10)	pull off, fit on.
	Installation note Clean intake manifold and flange faces. Check flange faces with straightedge, dress on dressing plate if necessar.
Intake manifold gasket (12)	replace.
Accelerator control linkage	adjust (30–1010).
Idle speed	check, adjust (07.3–2053).
Intake system	check for leaks by spraying.

Note

Models 124, 126, 201

Installation of asbestos-free intake manifold gasket.

Production breakpoint: June 1990

Model	Engine	Engine end no. manual transmission	Engine end no. automatic transmission
124.026	103.940	031533	085272
124.030/050/090	103.983	037742	215417
124.226	103.943	000522	001303
124.230/290	103.985	002519	012084
126.020	103.941	004680	015569
126.024/025	103.981	008217	119512
201.029	103.942	017473	048459

Note

Modified attachment of intake manifold

Stud bolt with spring washer and nut replaced by M8 × 45 bolt + washer between cylinders 4 and 5

Production breakpoint: 05/90

Model	Engine	Engine end no. manual transmission	Engine end no. automatic transmission
124.026	103.940	031346	084580
124.030/050/090	103.983	037509	213971
124.226	103.943	000522	001294
124.230/290	103.985	002519	011869
126.020	103.941	004667	015478
126.024/025	103.981	008168	118451
201.029	103.942	017336	047984

14–1346 Replacing intake manifold (intake manifold removed)

Preceding work:
Removing and installing intake manifold (14–1310).

Operation no. of operation texts and work units or standard texts and flat rates:
14–1346.

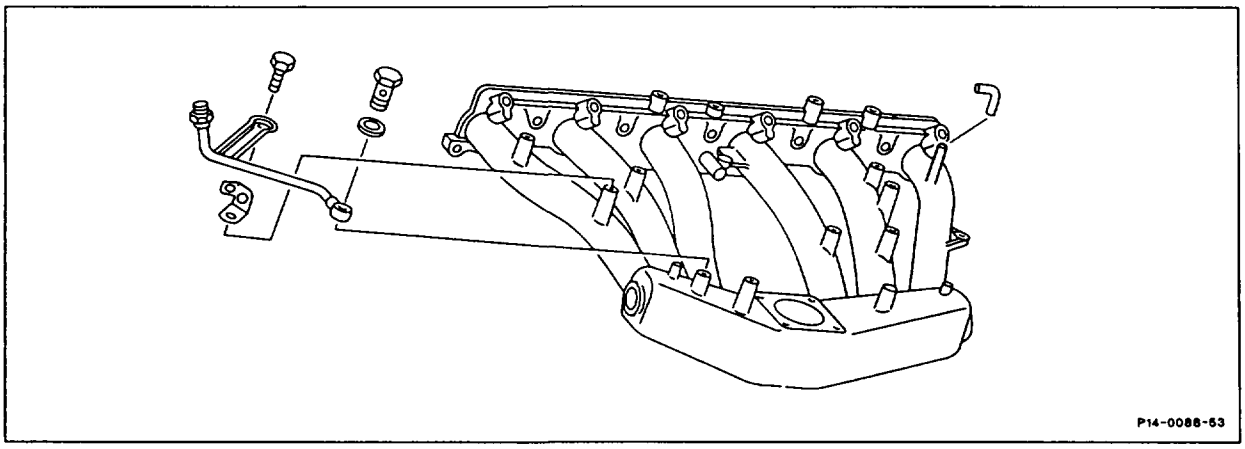

All parts attached to removed intake manifold . . . . . take off and install on new intake manifold.

Installation note
Replace all gaskets.

14–3915 Removing and installing exhaust manifold

Operation no. of operation texts and work units or standard texts and flat rates:
14–3915.

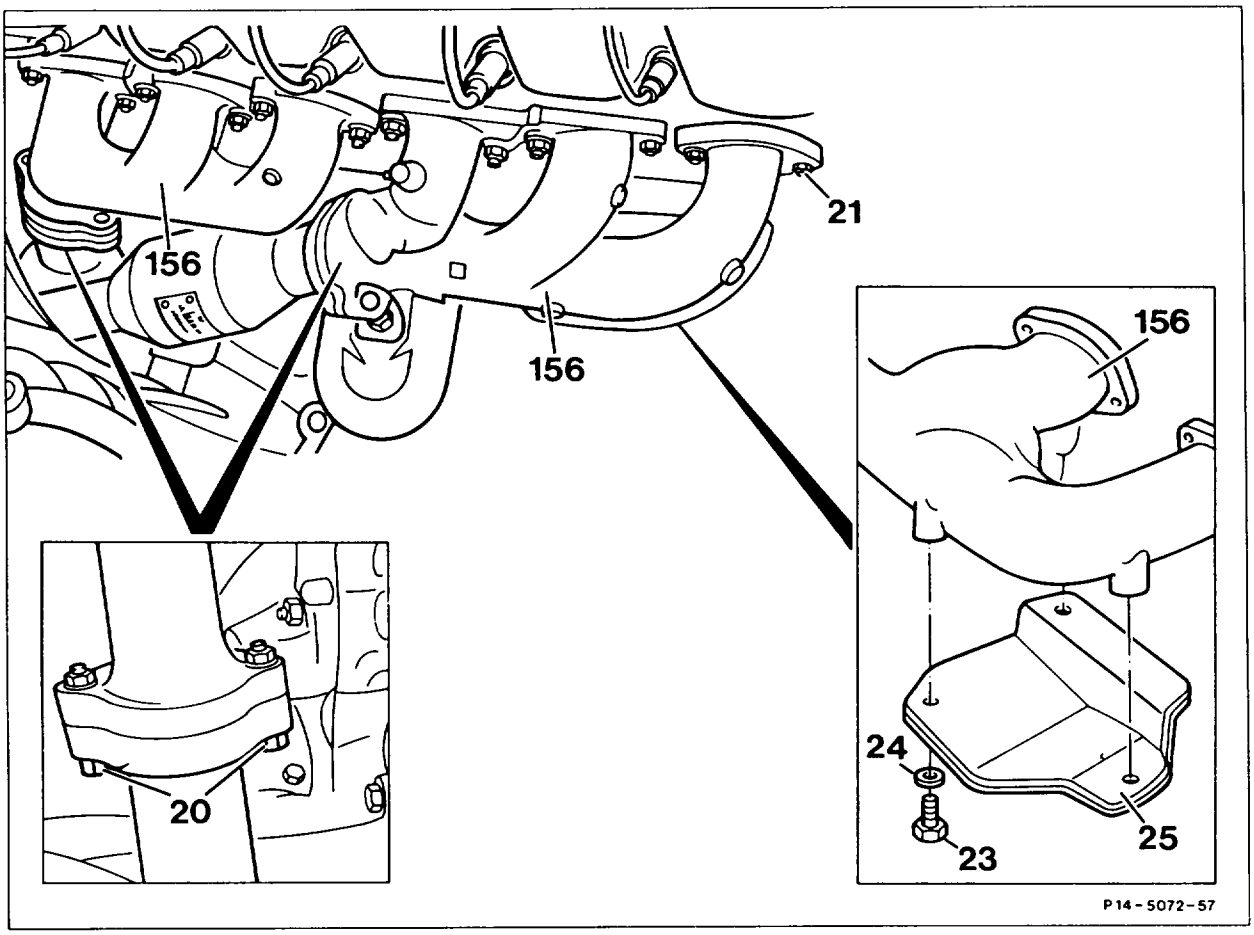

Carrier for exhaust bracket at transmission	take off, fit on (see 49–8701).
Bolts (20) at exhaust manifold	unscrew, screw in. Replace bolts (20). Tightening torque 25 Nm.
Nuts (21)	unscrew, screw on.
Exhaust manifold (156) with gaskets	take off, install. Replace gaskets.
	⚠ Pay attention to note.
Screws (23), washers (24) and shield (25)	take off, fit onto new exhaust manifold cylinders 1–3 (as of 09/89).

Notes

When installing the new gaskets, ensure that the beads (arrow) and the metal tabs are facing the exhaust manifold.

The gasket for cylinder 6 (A) has an additional hole.

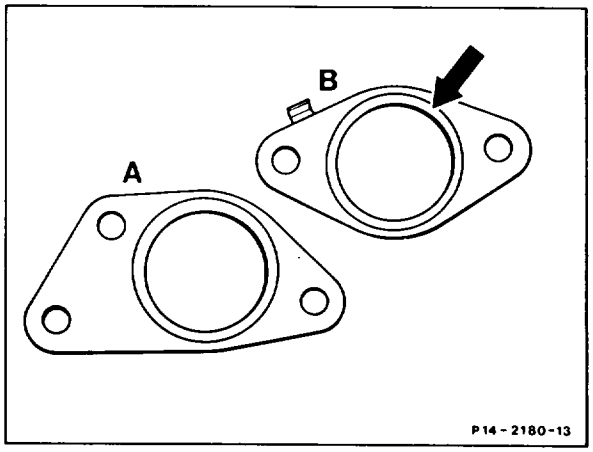

A Gasket cylinder 6
B Gasket cylinders 1–5

Exhaust manifold with emissions test connection, only for (CH) (as of 09/88).

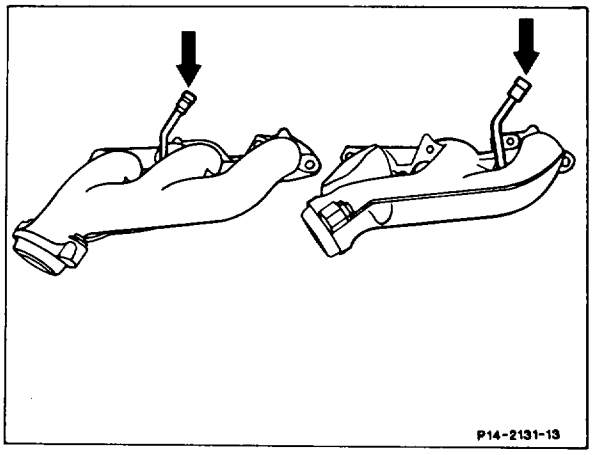

Arrows Test connection

Models 124, 126, 129, 201

Modified exhaust manifold (additional cooling and stiffening ribs).

National version (CH) with emissions test connection.

Production breakpoint: August 1989

Model	Engine	Engine end no. manual transmission	Engine end no. automatic transmission
124.026	103.940	027149	067740
124.030/050/090	103.983	031859	172890
124.226	103.943	000453	001082
124.230/290	103.985	001148	007994
126.020	103.941	000444	001062
126.024/025	103.981	007168	090679
129.060	103.984	000093	000145
201.029	103.942	014516	013733

Models 124, 126, 129, 201
Modified exhaust manifold (additional cooling and stiffening ribs).

Production breakpoint: October 1989

Model	Engine	Engine end no. manual transmission	Engine end no. automatic transmission
124.026	103.940	028537	073151
124.030/050/090	103.983	033860	187942
124.226	103.943	000480	001139
124.230/290	103.985	002300	008917
126.020	103.941	004379	014437
126.024/025	103.981	007628	100856
129.060	103.984	[1]	[1]
201.029	103.942	015769	038206

[1] Start of production.

Models 124, 201
National version (CH) (DK) (N) (S) (SF)
Modified exhaust manifold.
(CH) with connection fitting for emissions test, emissions control and air injection.

Production breakpoint: June 1990 (CH)

Model	Engine	Engine end no. automatic transmission
124.026	103.940	081081
124.030/050/090	103.983	198330
124.226	103.943	001285
124.230/290	103.985	011765
201.029	103.942	043383

(DK) (N) (S) (SF) without connection fitting for emissions test, emissions control and air injection.

Production breakpoint: June 1990 (DK) (N) (S) (SF)

Model	Engine	Engine end no. automatic transmission
124.026	103.940	081081
124.226	103.943	001285
201.029	103.942	043383

Models 124, 126, 129, 201
Installation of asbestos-free gaskets

Production breakpoint: July 1990 (cylinders 1–5)

Model	Engine	Engine end no. manual transmission	Engine end no. automatic transmission
124.026	103.940	031878	086413
124.030/050/090	103.983	038217	217714
124.226	103.943	000522	001318
124.230/290	103.985	002519	012464
126.020	103.941	004714	015697
126.024/025	103.981	008338	121519
129.060	103.984	000324	001386
201.029	103.942	017641	049523

Production breakpoint: August 1990 (cylinder 6)

Model	Engine	Engine end no. manual transmission	Engine end no. automatic transmission
124.026	103.940	032313	087951
124.030/050/090	103.983	038853	221128
124.226	103.943	–	001331
124.230/290	103.985	–	013180
126.020	103.941	004741	015792
126.024/025	103.981	008430	123880
129.060	103.984	000386	001618
201.029	103.942	017889	050775

Models 124, 126, 129, 201
Collar nut for attaching exhaust manifold in place of nut with washer.

Production breakpoint: November 1990

Model	Engine	Engine end no. manual transmission	Engine end no. automatic transmission
124.026	103.940	033527	093040
124.030/050/090	103.983	040556	232991
124.226	103.943	–	001377
124.230/290	103.985	–	015058
126.020	103.941	004857	016164
126.024/025	103.981	008659	130710
129.060	103.984	000503	002176
201.029	103.942	018647	054679

Operation no. of operation texts and work units or standard texts and flat rates:
14–7165.

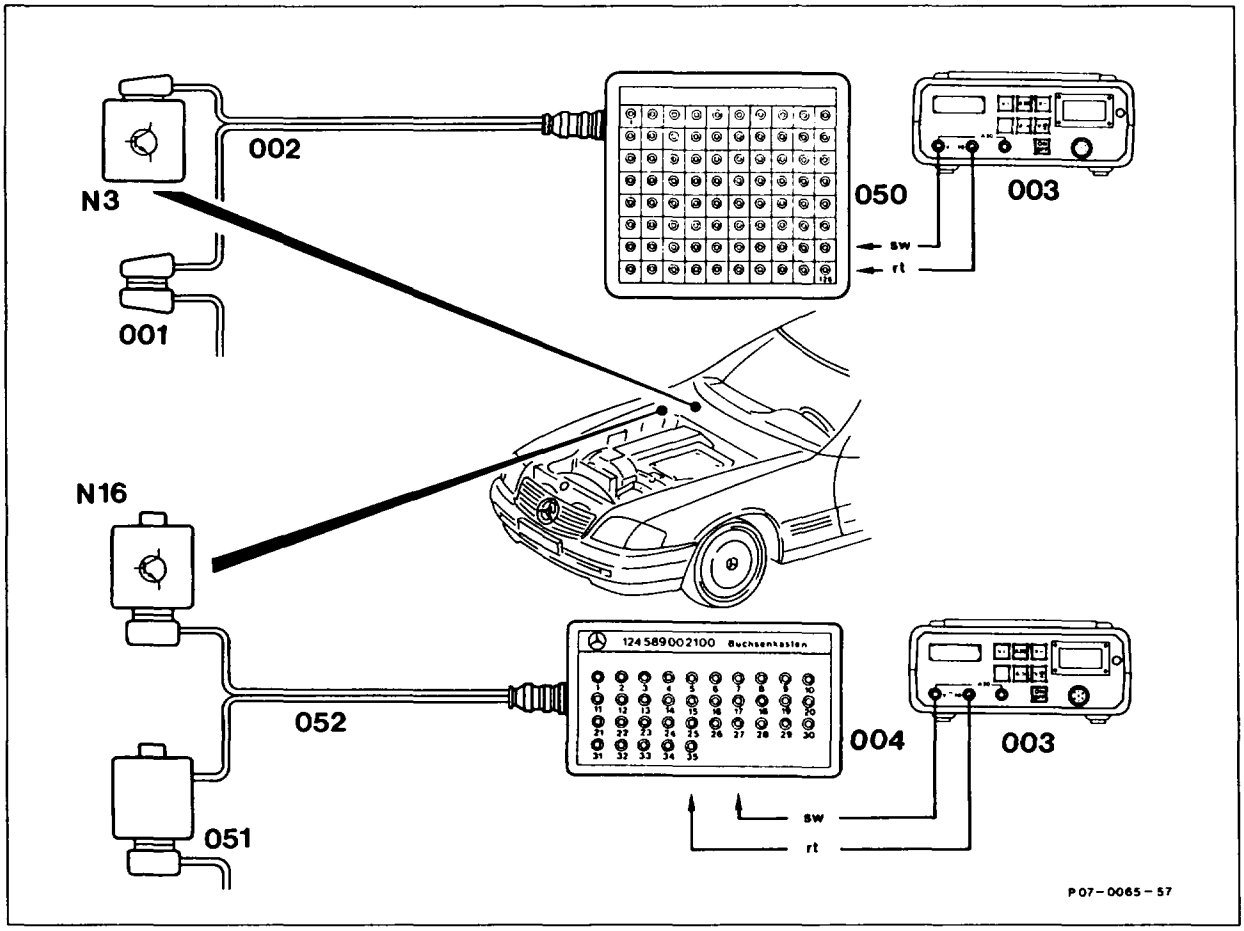

001	KE control unit coupling	051	Coupling, engine systems control unit
002	Test cable	052	Test cable
003	Multimeter	N3	KE control unit
004	35-pin contact box	N16	Engine systems control unit MAS
050	126-pin contact box		

Note

Engine systems control unit MAS only on model 129 and models 124, 126, 201 national version (USA) (J).

Special tools

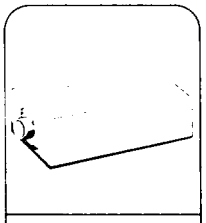

124 589 00 21 00
54

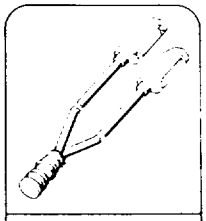

124 589 33 63 00
07 28 54

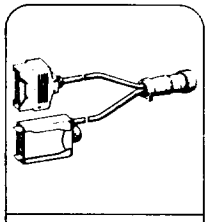

129 589 05 63 00
15

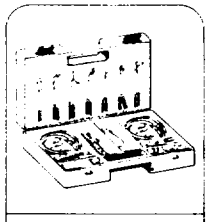

201 589 00 99 00
15 54

Commercially available tools and testers (see Workshop Equipment Manual)

Designation	e.g. Make, order no.
Multimeter	Sun, DMM-5

Symbols for testers

- Contact box
- Pin
- Contact
- Bridge

Symbols for test mode with multimeter

- Multimeter DC voltage mode
- Multimeter Resistance mode

Preconditions for test

- Battery voltage 11 – 14 V.
- Engine oil temperature approx. 80 °C.

See appropriate wiring diagram volume for wiring diagrams.

Note

If the specification of a main test step, e.g. test step 5.0, is in order, continue with the next main test step, e.g. test step 6.0.

If the specification of a main test step, e.g. test step 5.0, is not achieved, continue test with sub-test step, e.g. test step 5.1.

The tests 1.0 – 6.1, air injection/transmission shift point retard relay (K17/3), apply only to models 124, 201 (CH) (DK) (N) (S) (SF) as of model year 1991.

The tests 7.0 – 10.1, air injection via MAS, apply only to models 124, 126, 201 (J) (USA) as of model year 1990.

Test step	Test scope	Test connection	Operation/ Requirement	Specification	Possible cause/Remedy
1.0	Actuation of air pump switchover valve (Y32)	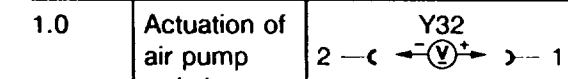	4-pin coolant temperature sensor (B11/2) disconnected, simulate +20°C with 2.5 kΩ. [1]) Engine: **idling**	11–14 V approx. 80 sec.	Voltage and ground supply for air injection/transmission shift point retard relay (K17/3), Air injection/transmission shift point retard relay (K17/3) faulty, No coolant temperature signal, Open circuit in wiring
2.0	Actuation of air pump electro-magnetic clutch (Y33)	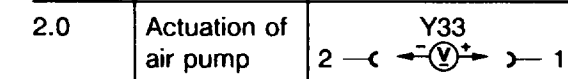	4-pin coolant temperature sensor (B11/2) disconnected, simulate +20°C with 2.5 kΩ. [1]) Engine: **idling**	< 1 Ω	Voltage and ground supply for air injection/transmission shift point retard relay (K17/3), Air injection/transmission shift point retard relay (K17/3) faulty, No coolant temperature signal, Open circuit in wiring
3.0	Voltage supply of air injection/ transmission shift point retard relay (K17/3)	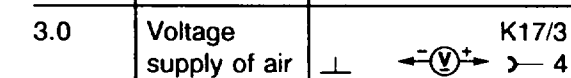	Air injection/ transmission shift point retard relay (K17/3) removed. Ignition: **ON**	11–14 V	7-pin overvoltage protection relay (K1/1), Air injection/transmission shift point retard relay (K17/3), Open circuit in wiring

[1]) Two resistance decades: contact 1 – contact 3, contact 2 – contact 4.

Test step	Test scope	Test connection	Operation/ Requirement	Specification	Possible cause/Remedy
3.1		K17/3 ⊥ —(V)— 3	Air injection/ transmission shift point retard relay (K17/3) removed Ignition: **ON**	11–14 V	**Model 124** Fuse no. 7 faulty, Open circuit in wiring, Air injection/transmission shift point retard relay (K17/3), Fuse and relay box **Model 201** Fuse no. 2 faulty, Open circuit in wiring, Air injection/transmission shift point retard relay (K17/3), Thermoswitch, washer system heater (S26/1)
4.0	Ground supply, air injection/ transmission shift point retard relay (K17/3)	K17/3 + 5 —(V)—	Air injection/ transmission shift point retard relay (K17/3) removed Ignition: **ON**	11–14 V	Open circuit in wiring, Air injection/transmission shift point retard relay (K17/3) → KE injection system control unit (N3), KE injection system control unit (N3) faulty
5.0	Air pump switchover valve (Y32)	Y32 1 —(Ω)— 2	Coupling at air pump switchover valve (Y32) disconnected Ignition: **OFF**	30 ± 5 Ω	Replace air pump switchover valve (Y32)

Test step	Test scope	Test connection	Operation/ Requirement	Specification	Possible cause/Remedy
5.1	Cable to air pump switchover valve (Y32)	K17/3 1 — 4 Y32 2 — 1	Air injection/ transmission shift point retard relay (K17/3) removed Ignition: **ON**	11–14 V	Open circuit in wiring, Air injection/transmission shift point retard relay (K17/3)
6.0	Air pump electro-magnetic clutch (Y33)	Y33 1 — 2	Coupling at air pump electro-magnetic clutch (Y33) disconnected Ignition: **OFF**	5 ± 1 Ω	Replace air pump electromagnetic clutch (Y33)
6.1	Cable to air pump electro-magnetic clutch (Y33)	K17/3 1 — 4 Y33 2 — 1	Air injection/ transmission shift point retard relay (K17/3) removed Ignition: **ON**	11–14 V	Open circuit in wiring, Air injection/transmission shift point retard relay (K17/3)
7.0	Air injection control signal	N16 17 — 21	Coupling of coolant temperature sensor (B11/2) disconnected and simulate with 2.5 kΩ [1]) Engine: **idling**	110 s 11–14 V	Open circuit in wiring, KE control unit (N3)

[1]) Two resistance decades: contact 1 – contact 3, contact 2 – contact 4.

Test step	Test scope	Test connection	Operation/ Requirement	Specification	Possible cause/Remedy
7.1	Cable	**Model 129** N3 N16 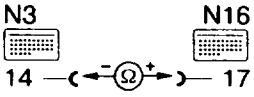 14 — 17 **Models 124, 126, 201** (J) (USA) N3 N16 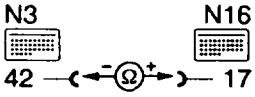 42 — 17	Ignition: **OFF**	< 1Ω	Open circuit in wiring
8.0	Air pump actuation	N16 4 — 19	Coolant temperature sensor coupling (B11/2) disconnected and simulate with 2.5 kΩ. [1] Engine: **idling** Air hose to non-return valve disconnected	110 s 11–14 V Perceptible air flow at air hose	Engine systems control unit (N16) Air pump, Air hose, Switchover valve (Y32)
9.0	Air pump switchover valve (Y32)	Y32 2 — 1	Coolant temperature sensor coupling (B11/2) disconnected and simulate with 2.5 kΩ. [1] Engine: **idling**	110 s 11–14 V	Open circuit in wiring
9.1	Switchover valve (Y32)	Y32 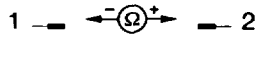 1 — 2	Ignition: **OFF** Coupling at switchover valve disconnected	25 ± 5 Ω	Switchover valve (Y32)

[1] Two resistance decades: contact 1 – contact 3, contact 2 – contact 4.

Test step	Test scope	Test connection	Operation/ Requirement	Specification	Possible cause/Remedy
10.0	Actuation of air pump electro-magnetic clutch (Y33)	Y33 2 — — 1	Coolant temperature sensor coupling (B11/2) disconnected and simulate with 2.5 kΩ. [1]) Engine: **idling**	110 s 11–14 V	Open circuit in wiring
10.1	Air pump electro-magnetic clutch (Y33)	Y33 1 — 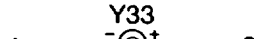 — 2	Ignition: **OFF** Coupling at air pump electromag-netic clutch disconnected.	5 ± 1 Ω	Air pump electromagnetic clutch (Y33)

[1]) Two resistance decades: contact 1 – contact 3, contact 2 – contact 4.

Table of coolant temperature sensor (B11/2)

Temperature °C	Resistance kΩ	Voltage at contact 21 coolant (V)
–20	15.7	3.24–3.94
–10	9.2	2.84–3.47
0	5.9	2.39–2.93
10	3.7	1.94–2.37
20	2.5	1.51–1.84
30	1.7	1.16–1.42
40	1.18	0.88–1.08
50	0.84	0.66–0.80
60	0.60	0.50–0.61
70	0.44	0.38–0.46
80	0.33	0.29–0.35
90	0.25	0.22–0.26

Diagram of temperature sensors
Resistances of coolant temperature sensor (B11/2) and KE intake air temperature sensor (B17/2).

Note
As of 08/88 specification at 80 °C 0.29 – 0.35 kΩ.

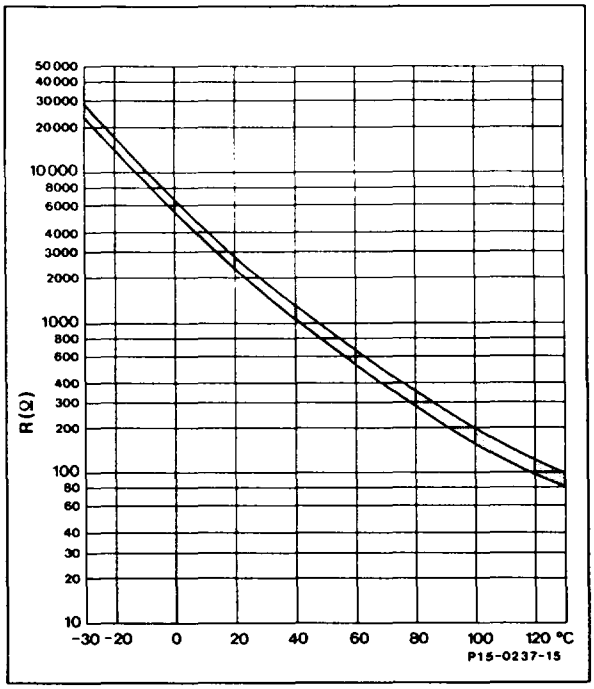

4-pin EZL/KE, LH coolant temperature sensor (B11/2)

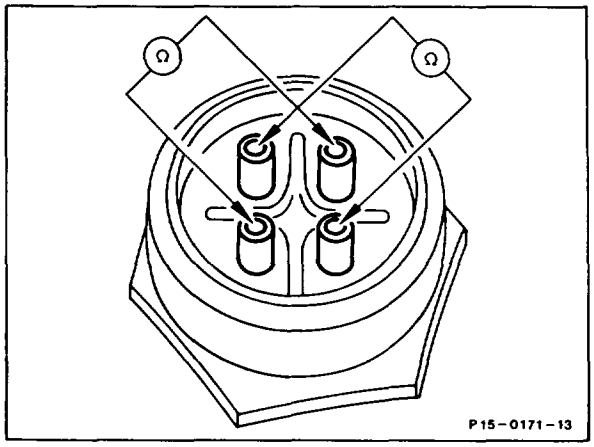

4-pin connector of EZL/KE, LH coolant temperature sensor (B11/2)

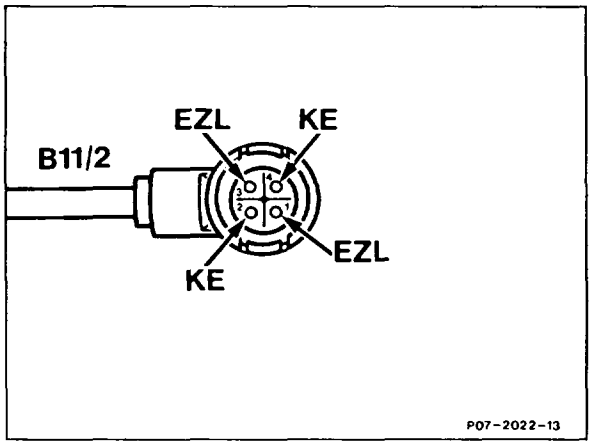

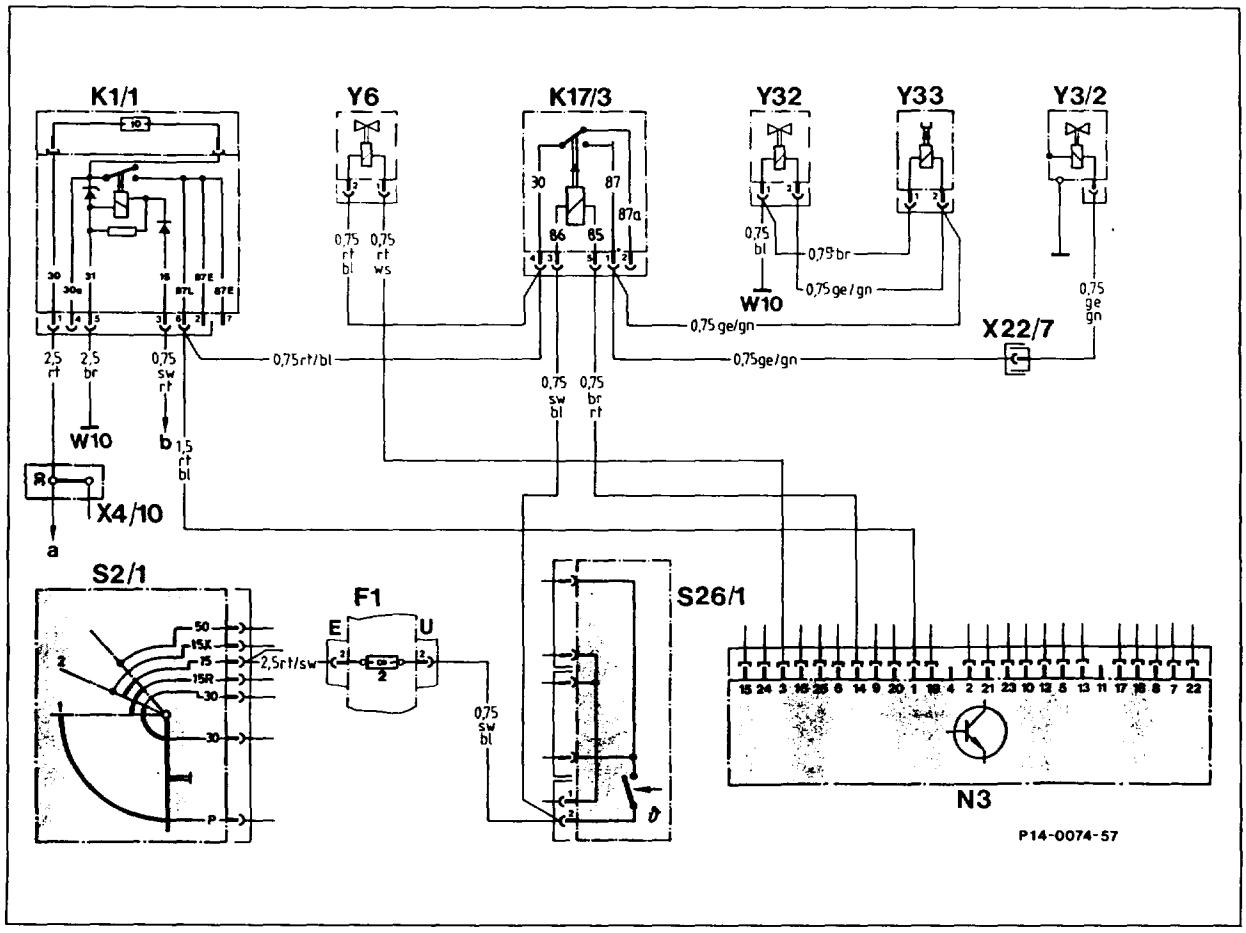

Wiring diagram transmission shiftpoint retard/air injection
Engine 103 model 124 (CH) (N) (S) (DK) (SF) as of 1991

F1	Fuse and relay box	X22/7	Plug connection, shiftpoint retard valve (1-pin)
K1/1	Overvoltage protection relay 87E, 7-pin	Y3/2	Shiftpoint retard solenoid valve
K17/3	Air injection/transmission shiftpoint retard relay	Y6	Idle speed air valve
N3	KE injection system control unit	Y32	Air pump switchover valve
S2/1	Ignition starter switch	Y33	Air pump electromagnetic coupling
S26/1	Heating-washer system thermostatic switch		
W10	Battery ground	a	To battery (G1)
X4/10	Terminal block terminal 30/terminal 61 (battery)	b	To fuel pump relay terminal 15

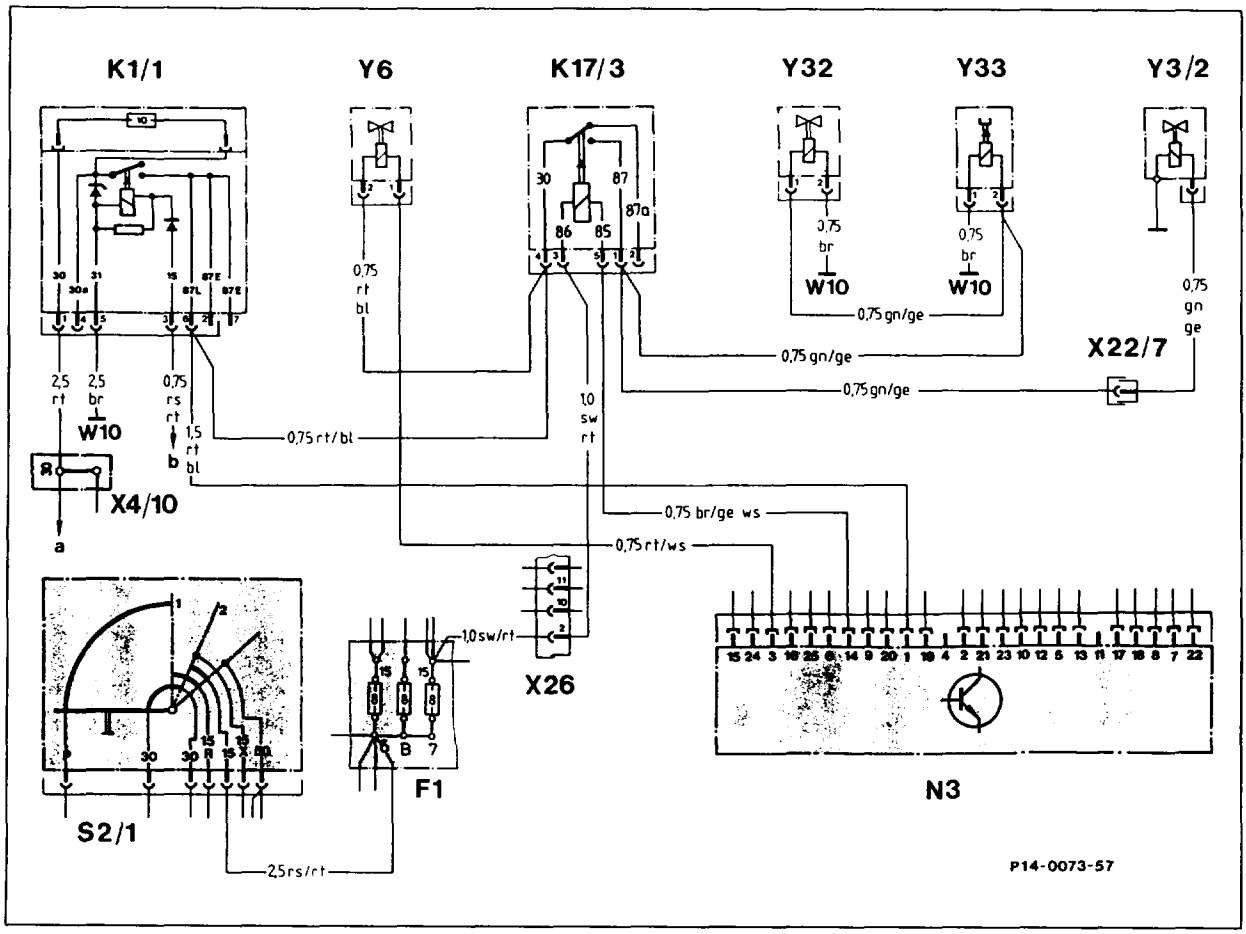

Wiring diagram transmission shiftpoint retard/air injection
Engine 103 model 201 (CH) (N) (S) (DK) (SF) as of 1991

F1	Fuse and relay box
K1/1	Overvoltage protection relay 87E, 7-pin
K17/3	Air injection/transmission shiftpoint retard relay
N3	KE injection system control unit
S2/1	Ignition starter switch
W10	Battery ground
X4/10	Terminal block terminal 30/terminal 61 (battery)
X22/7	Plug connection, shiftpoint retard valve (1-pin)
X26	Plug connection, interior/engine
Y3/2	Shiftpoint retard solenoid valve
Y6	Idle speed air valve
Y32	Air pump switchover valve
Y33	Air pump electromagnetic coupling
a	To battery (G1)
b	To fuel pump relay terminal 15

14–7251 Removing and installing air pump

Preceding work:
Removing and installing poly-V belt (13–340).

Operation no. of operation texts and work units or standard texts and flat rates:
14–7251.

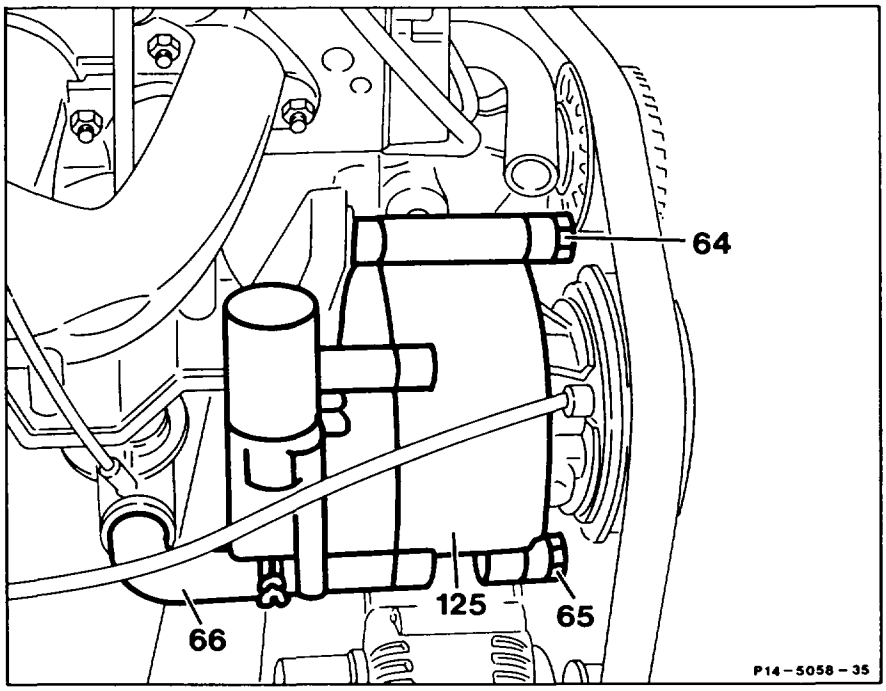

Plug connection of electromagnetic clutch (Y33) .	detach, plug in.
Screws (64, 65)	remove, screw in.
Shaped hose (66)	detach, fit on.
Air pump (125)	take off, fit on.

Note
After installing, tension poly V-belt (13–340).

Notes

Models 124, 126, 129, 201

Air injection line with modified connector for attaching non-return valve (simplification of production).

Production breakpoint: October 1990

Model	Engine	Engine end no. manual transmission	Engine end no. automatic transmission
124.026	103.940	033193	091486
124.030/050/090	103.983	040038	229328
124.230/290	103.985	–	014280
126.024/025	103.981	–	128404
129.060	103.984	000472	002008
201.029	103.942	018391	053206

Model 124 with automatic transmission

New start of production of exhaust gas recirculation, air injection and engine wiring harness.

Production breakpoint: June 1990 (without ASR)

Model	Engine	Engine end no. automatic transmission
124.026	103.940	084781
124.030/050/090	103.983	213355
124.226	103.943	001285
124.230/290	103.985	011813

Production breakpoint: June 1990 (with ASR, (CH) (N) (S))

Model	Engine	Engine end no. manual transmission
124.026	103.940	081089
124.030/050/090	103.983	198330

Production breakpoint: June 1990 (without ASR, (CH) (N) (S))

Model	Engine	Engine end no. manual transmission
124.026	103.940	084940
124.030/050/090	103.983	214618

Belt pulley at air pump

Installation of the spacer ring (arrow) in front of the bearing in the belt pulley.

A Previous version
B Present version

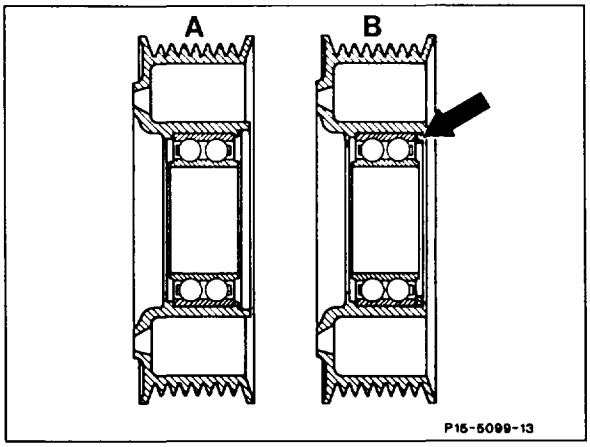

Production breakpoint: 08/91

Model	Engine	Engine end no. manual transmission	Engine end no. automatic transmission
124.007/026/027	103.940	036252	104252
124.030/050/090	103.983	044269	258049
124.230/290	103.985	–	017629
126.024/025	103.981	–	128404
129.060	103.984	000777	003801
201.029	103.942	019839	063830

14–7252 Removing and installing electromagnetic clutch

Preceding work:
Removing and installing air pump (14–7251).

Operation no. of operation texts and work units or standard texts and flat rates:
14–7252.

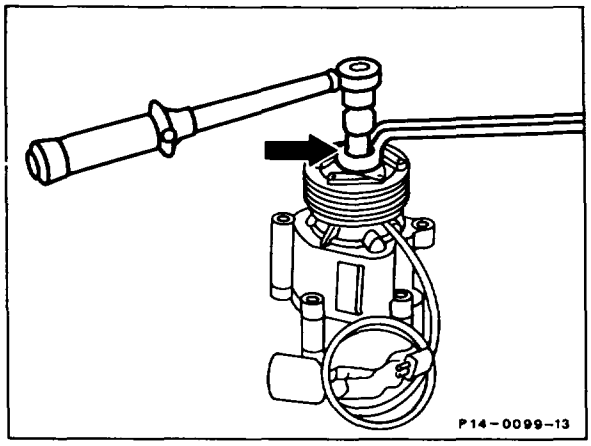

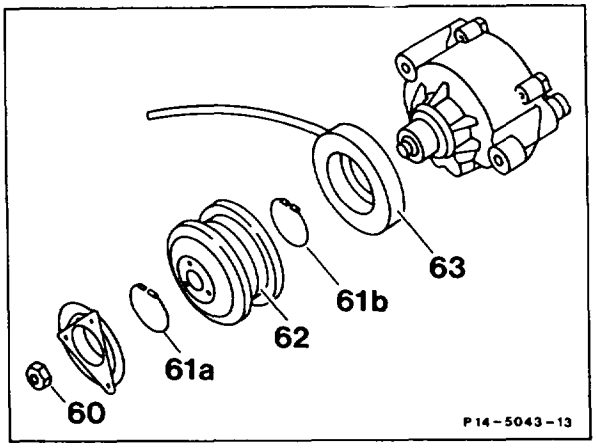

Nut (60)	unscrew, screw on. Counter-hold with hexagon socket (arrow). Tightening torque 35 ± 5 Nm.
Circlip (61a)	remove, install.
Drive gear (62)	pull off, fit on.
Circlip (61b)	remove, install.
Solenoid (63)	take off, fit on (see note).

Note
Solenoid (63) must engage in locking pin (arrow).

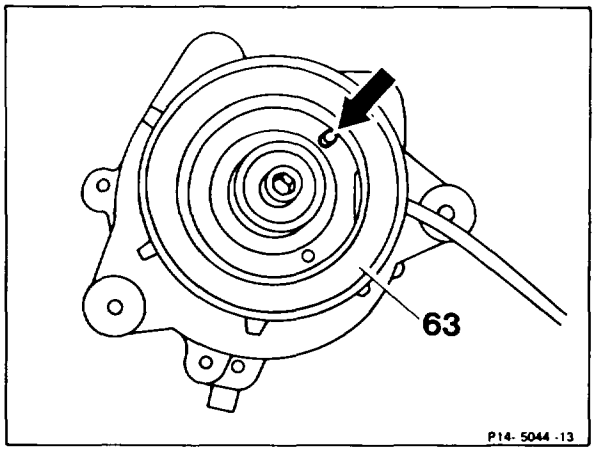

14–7253 Removing and installing air injection/transmission shiftpoint retard relay

Operation no. of operation texts and work units or standard texts and flat rates:
14–7253.

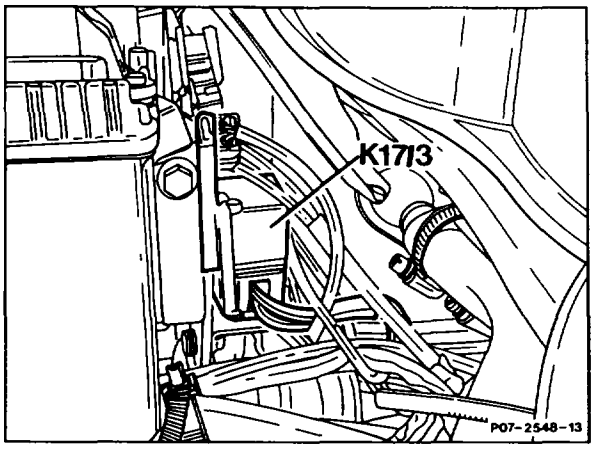

Model 124

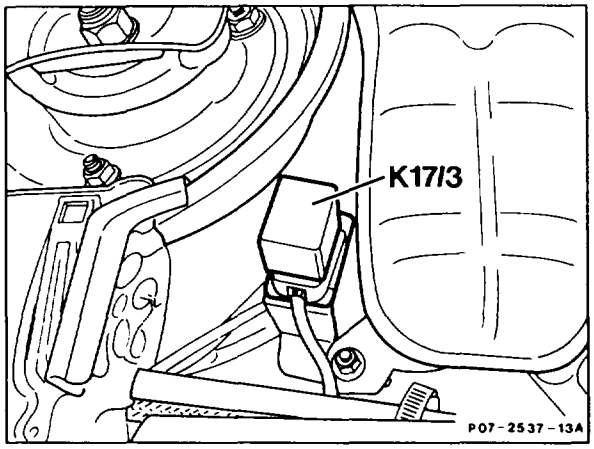

Model 201

Ground cable at battery	disconnect, connect.
Air injection/transmission shift point retard relay (K17/3)	remove, insert.

Note
Air injection/transmission shiftpoint retard relay (K17/3) only for model 124/201 national version (CH) (N) (S) (DK) (SF) as of 1991.

14–7305 Removing and installing air pump switchover valve

Preceding work:

Operation no. of operation texts and work units or standard texts and flat rates:
14–7305.

Models 124, 201 basic and national version (CH) (DK) (N) (S) (SF) as of 1991,
Models 124, 126, 201 national version (J) (USA) as of 1990,
Model 129

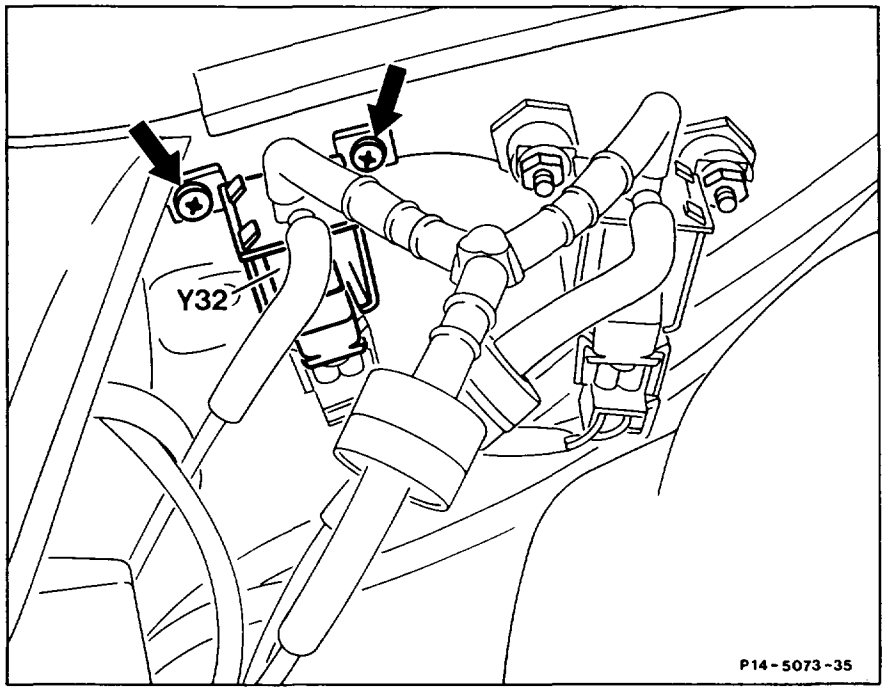

Model 124 (J) (USA)

Component compartment cover	remove, install (only model 129).
Electrical coupling	at air pump switchover valve (Y32), unplug, plug in.
Vacuum hose (tr/vi/bl)	pull off, fit on.
	Installation note Pay attention to colour coding on vacuum hose (see function diagram air injection).
Vacuum hose for non-return valve	pull off, fit on.
Screws (arrows)	remove, insert.
Air pump switchover valve (Y32)	at carrier, detach, attach.

KE control unit fault memory (only models 124, 126, 201 (J) (USA) as of model year 1990)	read, erase if necessary.

Note
Stored faults which may originate from disconnected cables or simulation when performing test work, must be erased in the fault memory after completing all work.

Tasks, components, function description see function of emissions control system (see Repair Instructions Function description KE Injection System Combustion II, 14–0030).

14–7611 Testing exhaust gas recirculation

Preceding work:
Testing, adjusting engine (07.3–1100).

Operation no. of operation texts and work units or standard texts and flat rates:
14–7611.

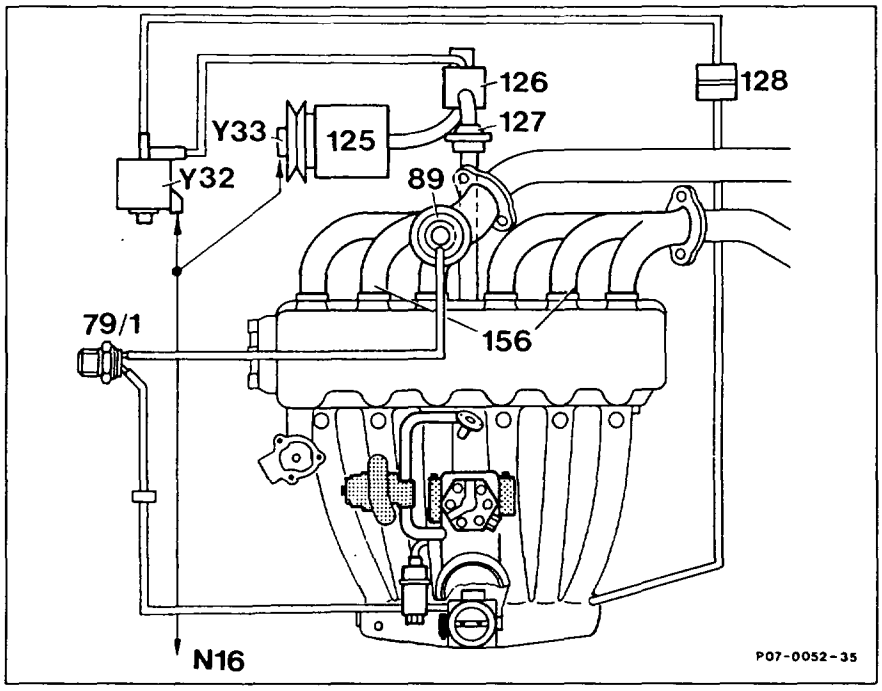

Function diagram air injection and exhaust gas recirculation

79/1	70/35 °C thermoventil	128	Non-return valve (vacuum)
89	Exhaust gas recirculation	156	Exhaust manifold
125	Air pump	N16	Engine systems control unit MAS
126	Air shutoff valve	Y32	Air pump switchover valve
127	Non-return valve (injected air)	Y33	Air pump electromagnetic clutch

Special tool

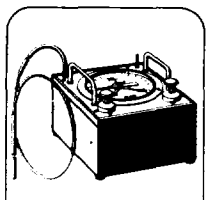

201 589 13 21 00
00 42 80

Test step	Test scope	Tester/ Test connection	Operation/ Requirement	Specification/ Function	Possible cause/Remedy
1	ARF valve	at ARF valve	Ignition: **OFF** Apply 300 mbar vacuum to ARF valve Detach vacuum line	ARF valve closes audibly	Replace ARF valve
		at ARF valve	Engine: **idling** Pressurize ARF valve with 300 mbar	Engine runs irregularly	Replace ARF valve
2	Vacuum line connection	Connect ws/vibr vacuum line from ARF valve with Y distributor	Increase engine speed to n = 4000/min	P > 400 mbar	Vacuum line, Line connection at throttle valve body
2.1	Thermovalve	Connect ws/vibr vacuum line from ARF valve with Y distributor	Ignition: **OFF** Detach both vacuum lines at thermal valve. Connect vacuum tester to angled connector and apply vacuum.	Coolant temperature: >70°C: passage; <60°C: no passage	Thermovalve
3		Connect ws/vibr vacuum line from ARF valve with Y distributor	Seal at straight connection. Apply vacuum to angled connection	Vacuum remains	Thermovalve

Exhaust gas recirculation (only KAT version)
The exhaust gas recirculation valve is located on the exhaust manifold for cylinders 1 – 3. The exhaust gas recirculation valve is a single-stage valve and is pressurized with vacuum from a coolant temperature of +70 °C through the thermovalve (arrow) and at a throttle valve angle of >11°.

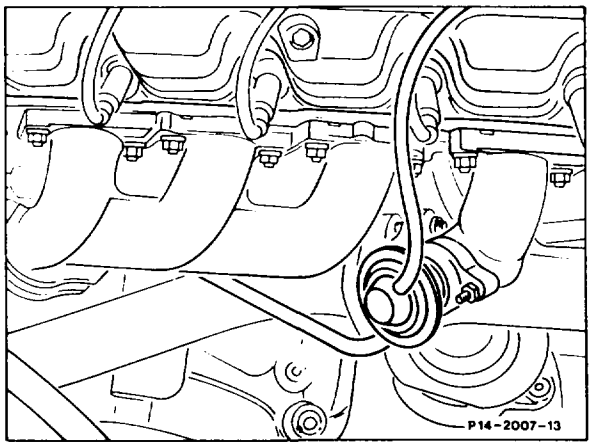

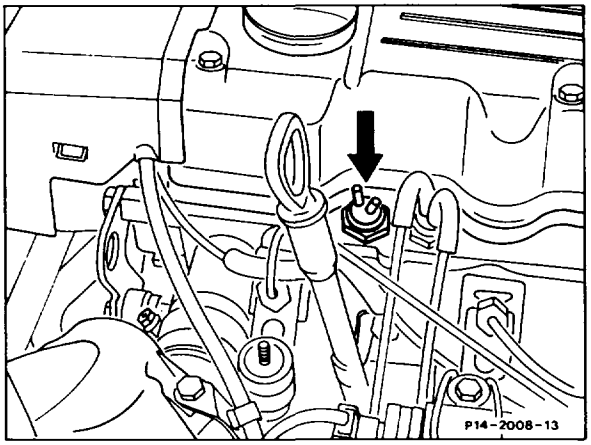

Note models 124, 129, 201
Exhaust gas recirculation valve
Diaphragm modified to improve sealing

Production breakpoint: 09/91

Model	Engine	Engine end no. manual transmission	Engine end no. automatic transmission
124.007 (USA) 124.026/027	103.940	036778	106442
124.030 (USA) 124.050/090	103.983	044891	264101
124.230 (USA) 124.290	103.985	018429	–
129.060	103.984	000839	004296
201.029 (USA)	103.942	020056	065697

14–7692 Removing and installing exhaust gas recirculation switchover valve (only (J) (USA))

Operation no. of operation texts and work units or standard texts and flat rates:
14–7692.

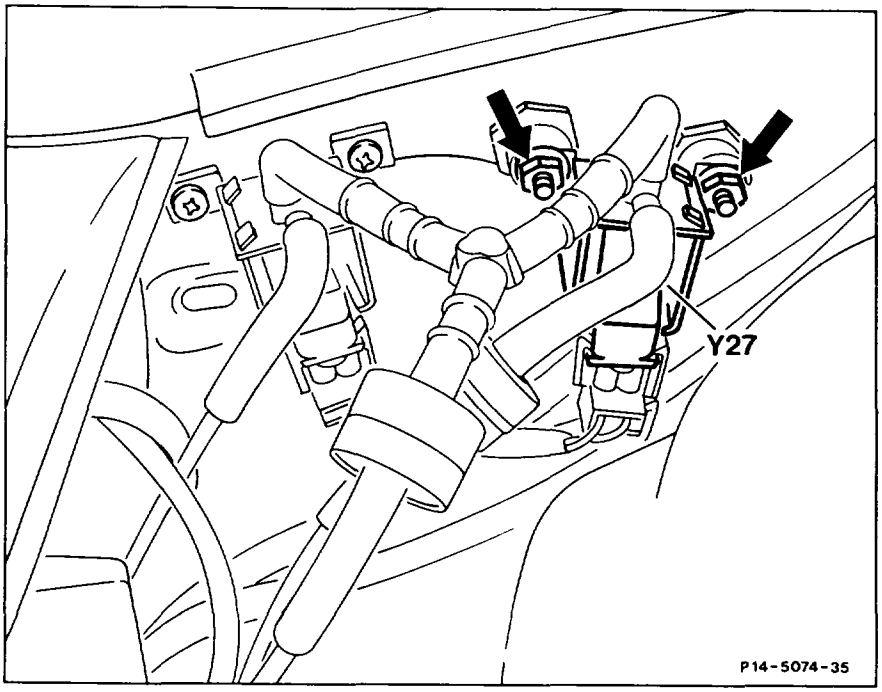

Model 124 (J) (USA)

Electrical coupling	at exhaust gas recirculation switchover valve (Y27), unplug, plug in.
Vacuum hose (tr/vi/br)	pull off, fit on.
	Installation note Pay attention to colour coding on vacuum hose.
Vacuum hose for non-return valve	pull off, fit on.
Nuts (arrows)	turn down, turn up.
Exhaust gas recirculation switchover valve (Y27)	detach at carrier, attach.

KE control unit fault memory . . . . . read, erase if necessary (see Diagnosis Manual Engine, Volme 2, Register 0).

Note
Stored faults which may be caused by disconnected cables or simulation during test work, must be erased in the fault memory after completing all work.

Function diagram air injection and exhaust gas recirculation
Models 124, 126, 201 national version (J) (USA)

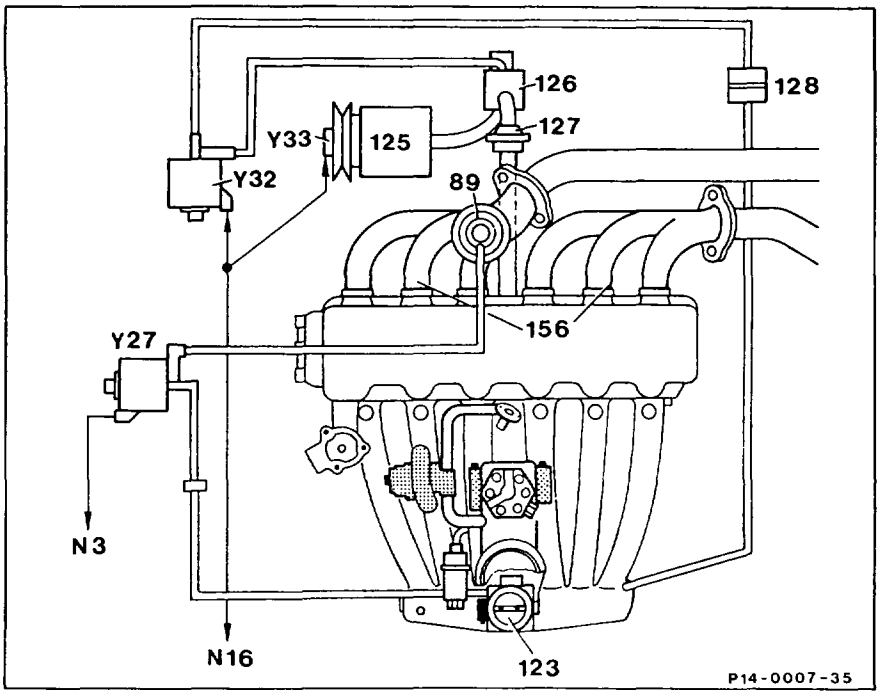

89 Exhaust gas recirculation valve
123 Throttle valve body
125 Air pump
126 Air shutoff valve
127 Non-return valve (injected air)
128 Non-return valve (vacuum)
156 Exhaust manifold
N3 KE injection system control unit
N16 Engine systems control unit MAS
Y27 ARF switchover valve
Y32 Air pump switchover valve
Y33 Air pump electromagnetic clutch

Note
On model 129 the exhaust gas recirculation valve (89) is controlled by a 70/35 °C thermovalve.

Check spark plugs, replace if necessary

1550

All gasoline engines

Special tools

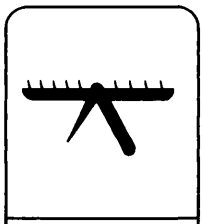

000 589 09 23 00

On engine 110 (illustration), blow out spark plug wells in cylinder head before removing spark plugs.

Remove spark plugs and check for deposits on electrodes. If deposits are present, replace spark plugs.

If no deposits are present, regap spark plugs to specification.

Install spark plugs and torque to 25-30 Nm.

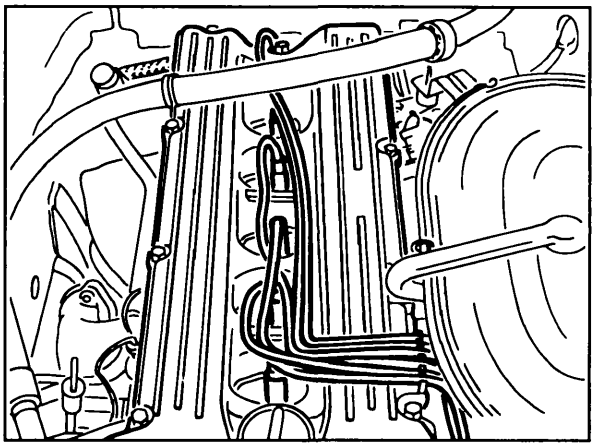

Replacing sparkplugs

1580

Gasoline engines

Torque specifications	Nm
Spark plugs with taper seat	10-20
Spark plugs with gasket	25-30

Special tools

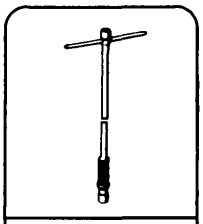
102 589 02 09 00

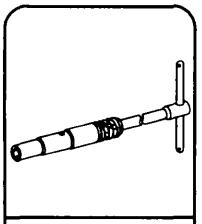
102 589 01 09 00

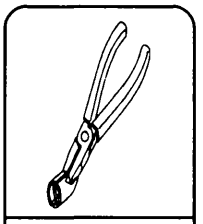
103 589 00 37 00

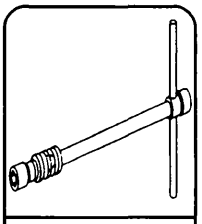
117 589 00 09 00

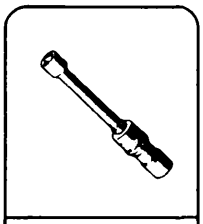
119 589 01 09 00

Engines 102.983, 104, 119

- Remove spark plug valley cover.

All engines

- Twist spark plug connector slightly and pull off using special tool 103 589 00 37 00.

- Blow out recesses with compressed air.

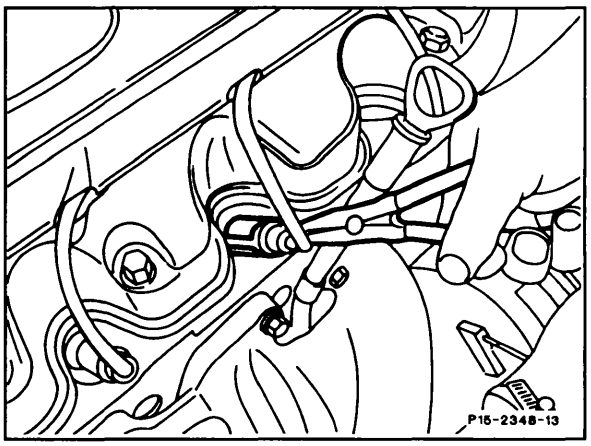

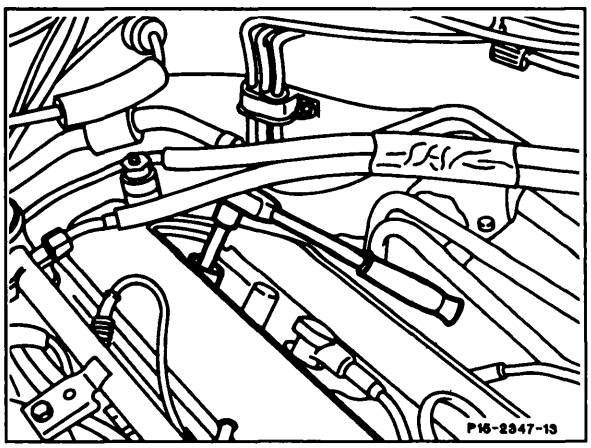

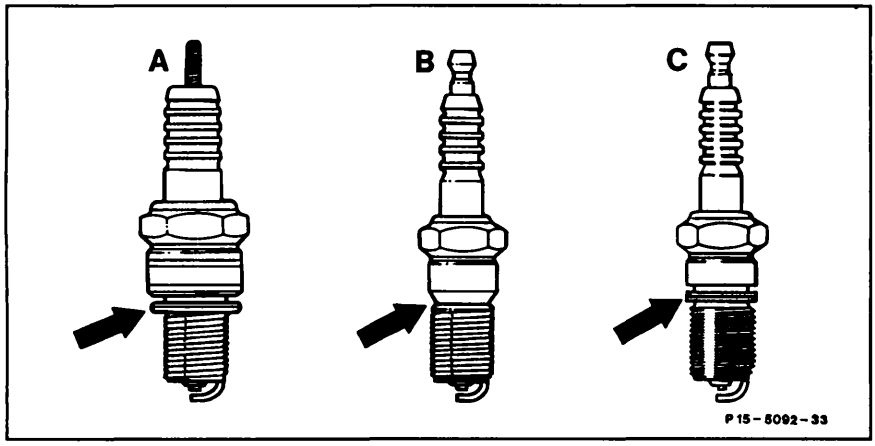

A flat seat (A)
B tapered seat (B)
C flat seat (C)

CFI fuel injection

Motor	Spark plug seal	Spark plug wrench
102, 103	Tapered seat (B)	102 589 01 09 00
104, 119	Flat seat (C)	120 589 02 09 00 1)
116, 117	Flat seat (A)	117 589 00 09 00

1) Insert commercially available torque wrench

LH-SFI fuel injection

Motor	Spark plug seal	Cylinder	Spark plug wrench
104	Flat seat (C)	all	119 589 01 09 00
119	Flat seat (C)	1–3 and 5–7	120 589 02 09 00 1)
		4 and 8	119 589 01 09 00
120	Flat seat (C)	1–5 and 7–12	120 589 02 09 00 1)
		6	119 589 01 09 00

1) Insert commercially available torque wrench

Spark plug cover, removal and installation

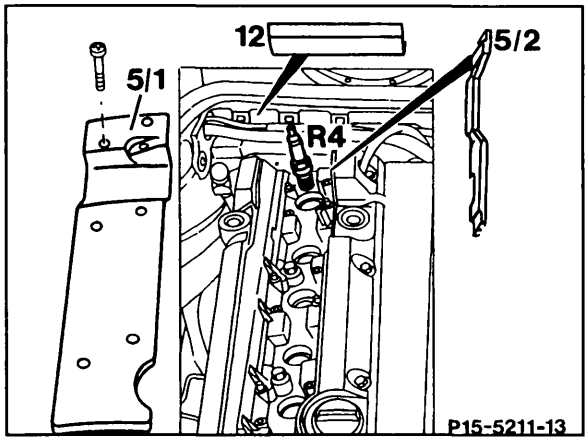

Engine 104 HFM-SFI
Remove air cleaner crossover duct, wiring cover, ignition cable cover (5/1), and guide rail (5/2).

Installation is in the reverse order of removal.

Ignition coils, removal and installation

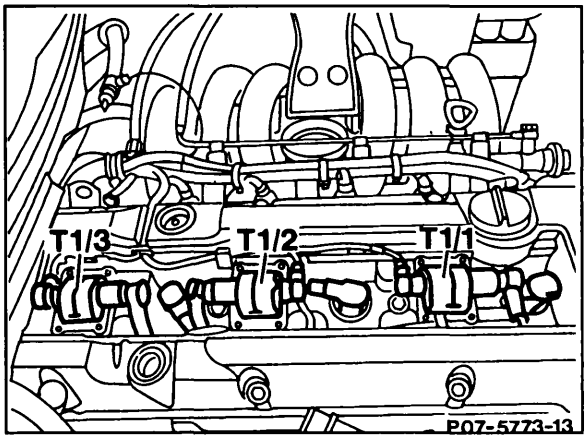

Engine 104 HFM-SFI
Remove ignition coils and cables with associated wiring.

Installation is in the reverse order of removal.

Partial removal of wiring conduit

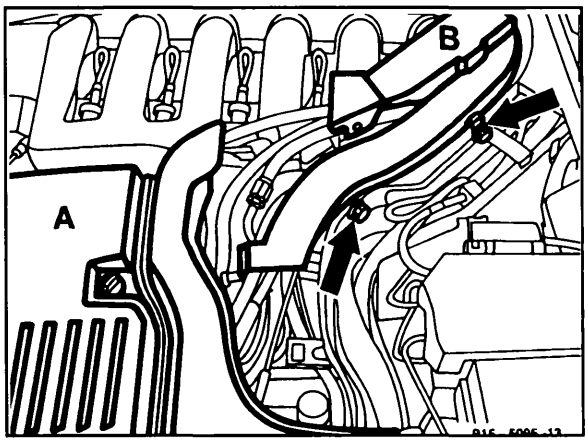

Engine 120
Pull weatherstripping off partially. Remove covers for ignition control module (A) and for wiring harness (B).
Remove screws for wiring conduit.
Disengage wiring conduit and push forwards.

A. Safety precautions

Increased demands of modern engines in respect of the ignition systems and the desire for freedom of maintenance have lead to standard introduction of electronic ignition systems.

As a rule, the ignition capacities of electronic systems are higher than those of conventional systems. Further increases in capacity are likely. Consequently, electronic ignition systems operate in a power range which may be hazardous if contact is made with live parts or terminals (see warning sign).

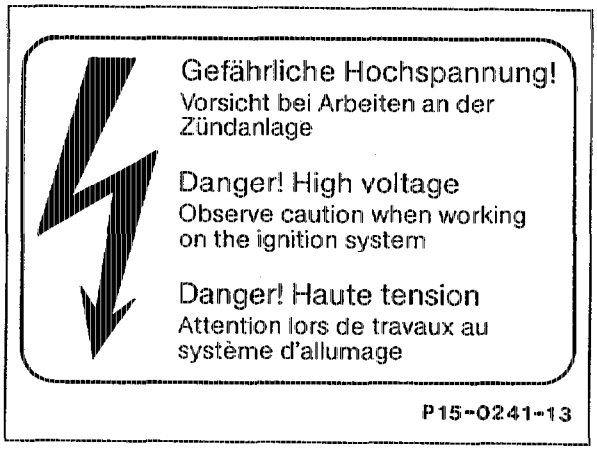

Warning sign in engine compartment

For this reason, when working on electronic ignition systems (EZL), pay attention to the following safety precautions:

- When performing work at starting speed, e. g. testing compression pressure, switch off ignition and unplug control cable (2) at the EZL ignition control unit or plug protective connector 102 589 02 21 00 into the diagnostic socket.
- Persons with a heart pacemaker should not operate on this type of ignition system.
- Do not grasp and/or unplug any component of the ignition system at starting speed or when the engine is running.
- Do not perform removal and installation work at the ignition system or disconnect and connect sensors at ignition cables unless the engine is not running and the ignition is switched off.

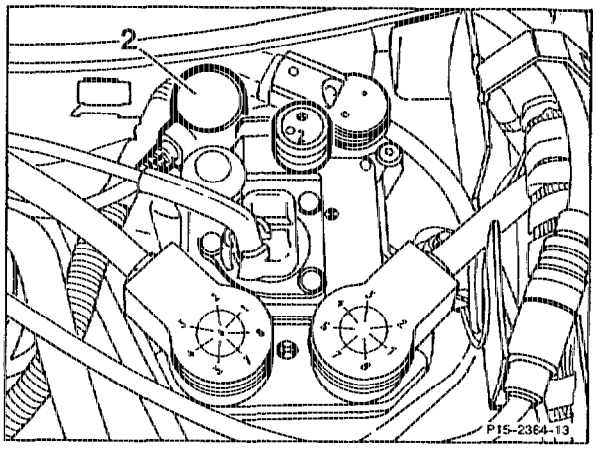

Shown on engine 119

B. Notes regarding avoiding damage to the ignition system

- **The connectors of ignition control units must not be unplugged or plugged in unless the ignition is switched off to avoid damaging the EZL ignition control unit.**
- Do not connect a test lamp to terminal 1 of the ignition coil.
- Terminals 1 and 15 of the ignition coil must not be short-circuited to ground, e. g. as an anti-theft protection.
- The threaded pins of the ignition coil have different diameters (M5 and M6) to eliminate the risk of incorrect polarity.
- Install only genuine components of the ignition system.
- Do not operate the ignition system at starting speed unless all the ignition cables are completely connected.
- To avoid damage to the EZL ignition control unit, the load applied to the high voltage side of the ignition system must be at least 2 kΩ (distributor rotor arm 1 kΩ, distributor cap per terminal 1 kΩ). Do not install 5 kΩ distributor rotor arms for interference suppression.
- The following operations must not be performed at starting speed or when the engine is running:
  – Holding ignition cable (terminal 4) close to ground,
  – unplugging spark plug connectors,
  – unplugging ignition cable (terminal 4) at the ignition coil.
- To improve heat dissipation, the EZL ignition control unit is provided with heat conducting paste on the rear side and covered with a heat-conducting protective film. This protective film must not be removed.
- When performing the separate ignition coil test, the load applied to the ignition coil must not exceed 28 kV to avoid damaging the ignition coil.

- If it is necessary to test the ignition spark when providing breakdown assistance, this must only be performed with a spark plug at a cylinder ignition cable.
  Ensure good ground contact of the spark plug.
  Pay attention to risk of electrification!

C. Notes regarding use of engine testers

- Do not connect and disconnect voltage clamp to ignition cable (terminal 4) and trigger clamp to ignition cable of cylinder 1 unless the engine is not running and the ignition is switched off.
- If the short-circuit protection (cylinder comparison) is operated and the engine stops, the test cannot be performed with this tester.

A. Safety precautions

The increased demands placed on modern engines in respect of ignition systems and the desire for freedom of maintenance have led to the standard implementation of electronic ignition systems.

As a rule, the ignition capacities of electronic systems are higher than those of conventional systems; futher increases in capacities are likely. Consequently, electronic ignition systems operate in a capacity range which may be hazardous if contact is made with live parts or terminals (see warning plate).

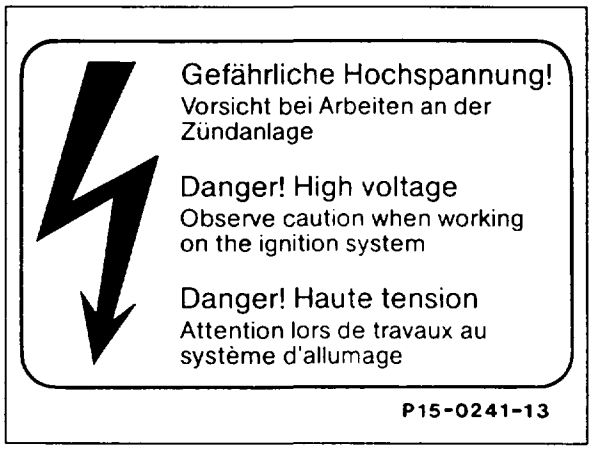

Warning plate in engine compartment

For this reason, when working on electronic ignition systems (EZL), it is essential to observe the following safety precautions:

- Before performing any work at starting speed, e.g. testing compression pressure or adjusting valve clearance, switch off ignition and detach control cable at EZL ignition control unit (arrow) or plug protective connector part no. 102 589 02 21 00 onto the diagnostic socket.
- Persons with heart pacemakers should not work on such ignition systems.
- Do not touch or disconnect any components of the ignition system at starting speed or when the engine is running.

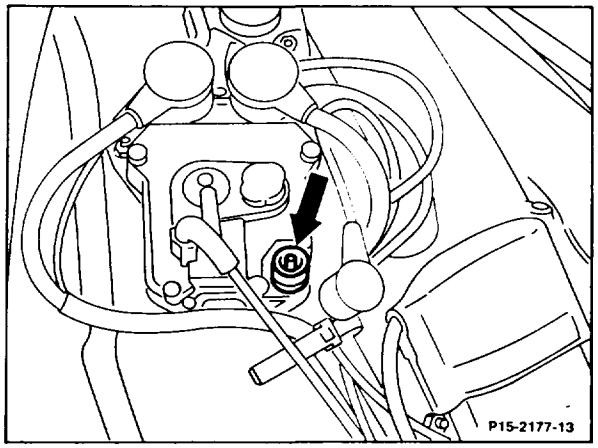

- Do not perform any removal and installation work on the ignition system or disconnect and connect sensors at ignition cables unless the engine is not running and the ignition is switched off.

B. Notes regarding avoiding damage to the ignition system

- **To avoid damage to the EZL ignition control unit, the control unit connectors must not be unplugged or plugged in unless the ignition is switched off.**
- Do not connect a test lamp to terminal 1 of the ignition coil.
- Terminals 1 and 15 of the ignition coil must not be short-circuited to ground, e.g. as anti-theft protection.
- To eliminate any incorrect polarity, the threaded pins of the ignition coil have different diameters (M5 and M6).
- Install only genuine components of the ignition system.
- Do not operate ignition system at starting speed unless all the ignition cables are connected.
- To avoid damage to the EZL ignition control unit, the load at the high voltage side of the ignition system must be at least 2 kΩ (distributor rotor 1 kΩ, distributor cap per terminal 1 kΩ). Do not install 5 kΩ distributor rotors for interference suppression.

- The following operations must not be performed at starting speed or when the engine is running:
  - holding ignition cable 4 close to ground
  - unplugging spark plug connectors
  - unplugging ignition cable 4 at ignition coil.
- The EZL ignition control unit is provided with heat-conducting paste on the rear in order to improve heat dissipation and covered with a heat-conducting protective sheet. The protective sheet must not be removed.
- When performing the separate ignition coil test, the load applied to the ignition coil must not exceed 28 kV to avoid damaging the ignition coil.
- If it is necessary to test the ignition spark when providing breakdown assistance, this must only be performed with a spark plug at a cylinder ignition cable. Ensure good contact to ground of the spark plug. Pay attention to risk of electrification!

C. Notes for use of engine testers and test equipment

- If the short-circuit protection is operated (comparing cylinders) and the engine stops, the test cannot be performed with this tester.
- Do not connect and disconnect voltage clamp to ignition cable 4 and trigger clamp to ignition cable of cylinder 1 unless the engine is not running and the ignition is switched off.

A. Unleaded "premium" and "regular" fuel

Vehicles fitted with a catalytic converter must only be operated with unleaded fuels.

Minimum anti-knock quality
Premium gasoline
DIN 51607-S unleaded 95 RON/85 MON
Regular gasoline
DIN 51607-N unleaded 91 RON/82,5 MON

The engines are designed to operate on unleaded premium quality fuel of at least 95 RON/85 MON (exception: engine 103.980 Std. is designed to run on leaded premium grade fuel RON 98/MON 88).
If the engine is operated continuously with unleaded regular grade fuel (engine 103.980: if unleaded premium grade fuel is used), the ignition timing must be retarded by using a suitable resistance trimming coupling to ensure knock-free operation (see 15–0520).
Slight deterioration in fuel consumption and engine performance occurs when the ignition timing is retarded.

B. Unleaded "premium plus" fuels

This fuel is standardized in conformity with DIN 51 607 with a minimum RON of 98 and MON of 88. It can be used for all Mercedes-Benz vehicles with gasoline engines.

Ignition timing
The correction to the ignition timing which was necessary on vehicles which are operated with unleaded premium or regular grade fuel, does not need to be required if "premium plus" fuel is used at all times.

15–0512 Replacing ignition cables with M3 cable screw

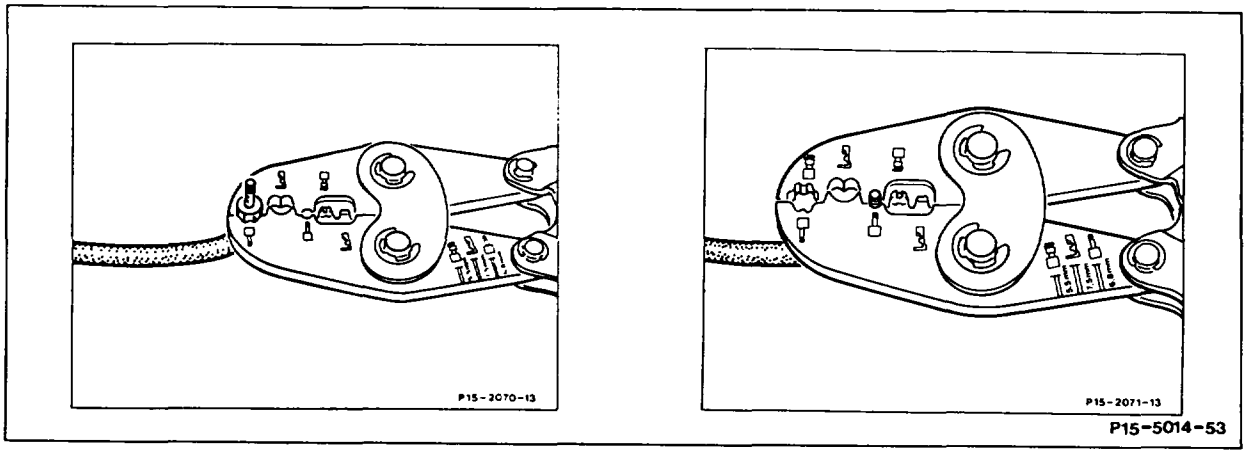

Note
Ignition cables are available in the parts market only by the meter. For this reason, before installing the ignition cables, attach the connection parts with electricians' pliers.

Ignition cables	cut to length.
Ends of ignition cables	strip insulation over 6 mm.
Sleeve of cable screw	fit on and attach with electrician's pliers first to the insulation then to the ignition cable core.
Markings for individual cylinders on ignition cables	fit on.
Spark plug connectors	screw on.

Special tool

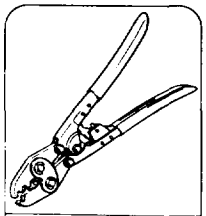

000 589 55 37 00
15

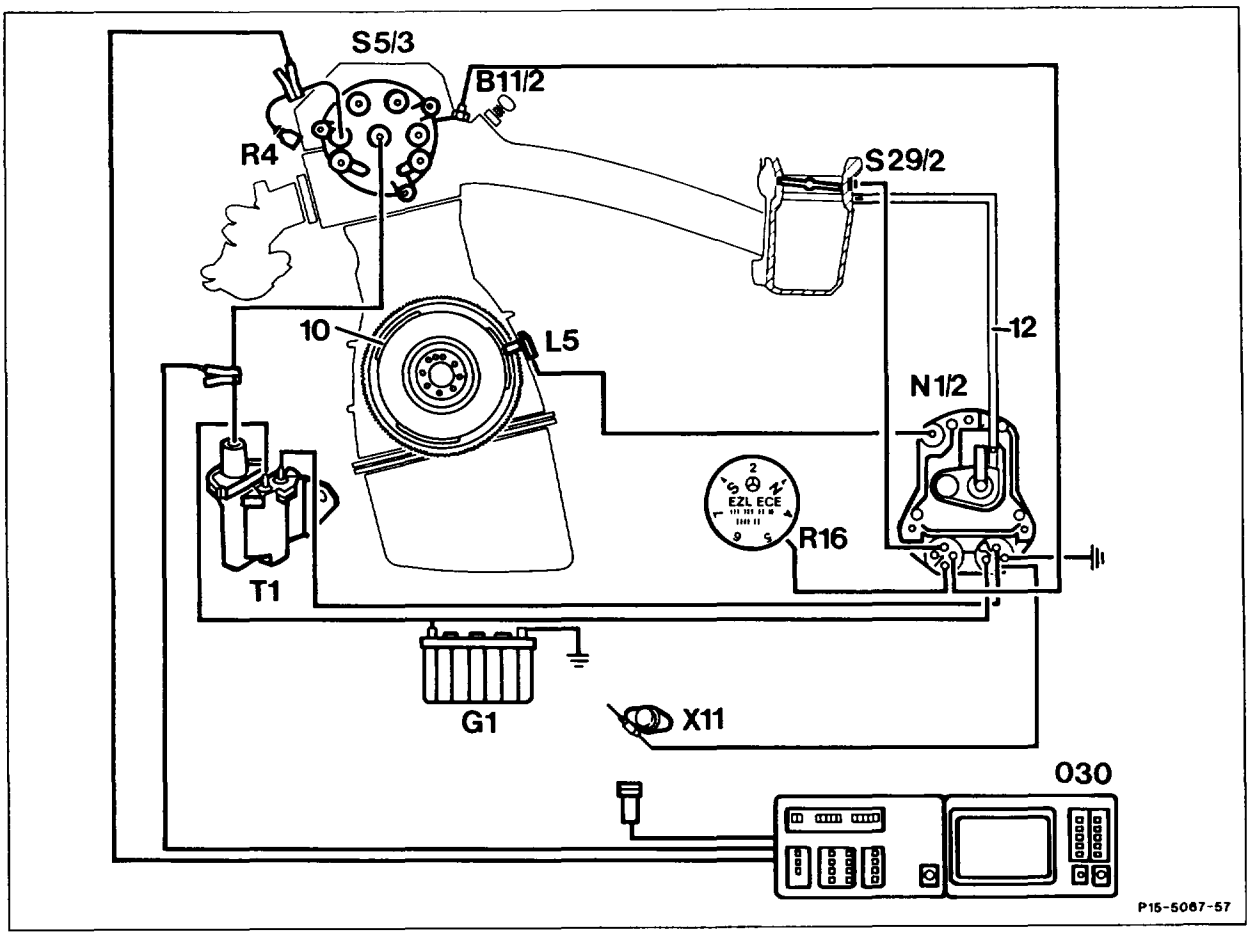

B11/2	Coolant temperature sensor (EZL/KE, LH), 4-pin	S29/2	Throttle valve switch, full load/idle speed recognition
G1	Battery		
L5	Crankshaft position sensor	T1	Ignition coil
N1/2	EZL ignition control unit	X11	Diagnostic socket/terminal block, terminal TD
R4	Spark plugs		
R16	EZL resistance trimming plug	10	Segments on flywheel/driven plate
S5/3	High voltage distributor	12	Vacuum line
		030	Engine tester with oscilloscope

Engine tester with oscilloscope (030) . . . . . connect to diagnostic socket (X11), disconnect.

Ignition timing . . . . . test at coolant temperature below 95 °C with or without vacuum at specified engine speed (see table).

EZL ignition timing point

Engine	EZL ignition control unit	Engine speed 1/min	Ignition timing point in ° CA before TDC		
			Resistance trimming plug position or type of fuel	without vacuum	with vacuum
Basic version KAT/RÜF and (CH) (S) KAT					
103.940 103.941 103.942 103.943	003 545 95 32 003 545 96 32 005 545 84 32 005 545 86 32 006 545 73 32 006 545 75 32 008 545 61 32 008 545 63 32 011 545 88 32 011 545 89 32	3200	S	25–29	40–44
			N	19–23	
		Idle speed	S and N	7–11	7–11
103.980	003 545 14 32 003 545 15 32	3200	1/ leaded premium	23–27	39–43
		Idle speed		8–13	8–13
		3200	3/ unleaded premium	19–23	39–43
		Idle speed		8–13	8–13
103.981 103.983 103.985	004 545 44 32 004 545 46 32 005 545 85 32 005 545 87 32 006 545 74 32 006 545 76 32 007 545 86 32 007 545 87 32 008 545 62 32 008 545 64 32	3200	S	27–31	40–44
			N	21–25	40–44
		Idle speed	S and N	6–11	6–11
103.982	004 545 44 32 004 545 46 32 005 545 85 32 005 545 87 32 006 545 74 32 006 545 76 32				
103.984	007 545 86 32 007 545 87 32				
National version (CH) 1986, (S) 1986 [1])					
103.981 103.983	004 545 69 32 005 545 49 32 005 545 88 32	3200	S	29–33	40–44
			N	23–27	
		Idle speed	S and N	TDC ± 2	TDC ± 2

[1]) For (CH) KAT, (S) KAT, same values as basic version KAT.

EZL ignition timing point

Engine	EZL ignition control unit	Engine speed 1/min	Ignition timing point in ° CA before TDC		
			Resistance trimming plug position or type of fuel	without vacuum	with vacuum
National version (AUS)					
103.940 103.942	005 545 84 32 005 545 86 32 006 545 73 32 006 545 75 32 008 545 61 32 008 545 63 32	3200	Reference resistor 220 Ω	19–23	40–44
		Idle speed		7–11	7–11
103.981 103.983	004 545 44 32 004 545 46 32 005 545 85 32 005 545 87 32 006 545 74 32 006 545 76 32 008 545 62 32 008 545 64 32	3200	Reference resistor 220 Ω	21–25	40–44
		Idle speed		6–11	6–11
National version (J)					
103.940 103.942	005 545 84 32 005 545 86 32 006 545 73 32 006 545 75 32 008 545 61 32 008 545 63 32	3200	Reference resistor 750 Ω	25–29	40–44
		Idle speed		7–11	7–11
103.981 103.983 103.985	004 545 44 32 004 545 46 32 005 545 85 32 005 545 87 32 006 545 74 32 006 545 76 32 008 545 62 32 008 545 64 32	3200	Reference resistor 750 Ω	27–31	40–44
		Idle speed		6–11	6–11
National version (USA)					
103.940 103.942	005 545 84 32 005 545 86 32 006 545 73 32 006 545 75 32 008 545 61 32 008 545 63 32 008 545 95 32 009 545 79 32	3200	Reference resistor 750 Ω	25–29	40–44
		Idle speed		7–11	7–11
103.981 103.983	004 545 44 32 004 545 46 32 005 545 85 32 005 545 87 32 006 545 74 32 006 545 76 32 008 545 96 32 009 545 80 32	3200	Reference resistor 750 Ω	27–31	40–44
		Idle speed		6–11	6–11

A. Location of EZL resistance trimming plugs

a) Basic version and (CH) KAT, (S) KAT EZL resistance trimming plug (R16)

Model 107
The EZL resistance trimming plug (R16) is located next to the diagnostic socket (X11) at the front left wheelhouse.

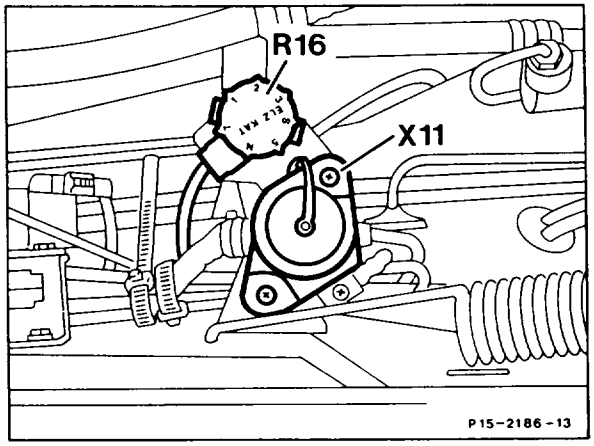

Model 124
The EZL resistance trimming plug (R16) is located on the left partition wall to the component compartment.

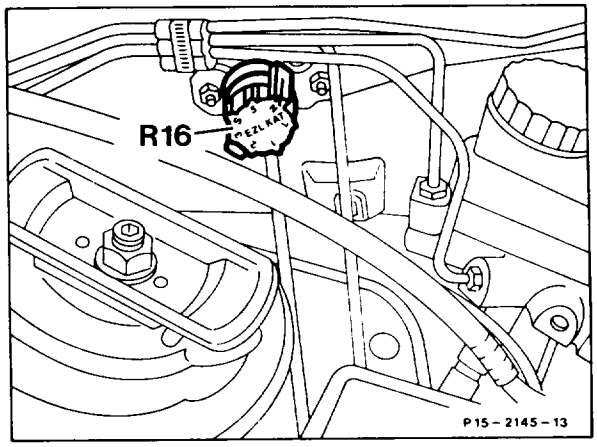

Model 124 with engine 103.980
The EZL resistance trimming plug (R16) is located in the right component compartment behind the battery.

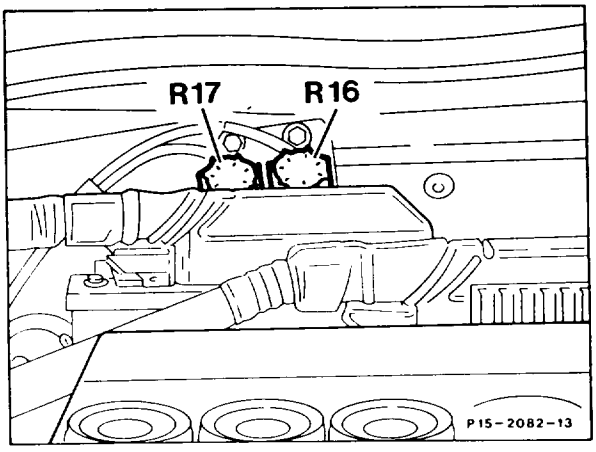

R16 EZL resistance trimming plug
R17 KE resistance trimming plug

Model 126
The EZL resistance trimming plug (R16) is located next to the interior/engine plug connection (X26) behind the fuse and relay box.

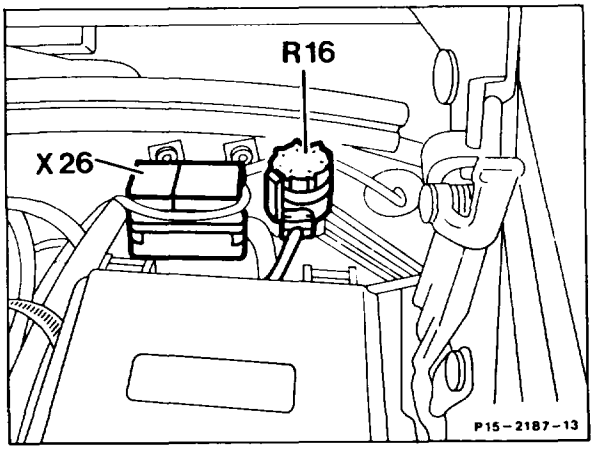

Model 129
The EZL resistance trimming plug (R16) is located in the left of the component compartment.

Model 201
The EZL resistance trimming plug (R16) is located on the left wheelhouse next to the EZL ignition control unit.

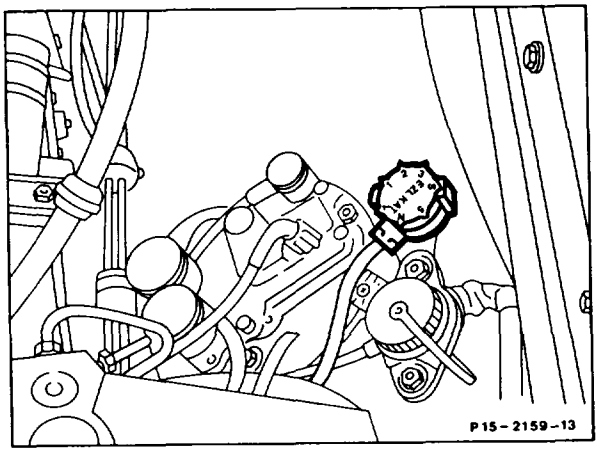

b) National version (AUS) (J) (USA) EZL reference resistor (R16/1)

Model 124
The EZL reference resistor (R16/1) is located in the left component compartment close to the brake booster.

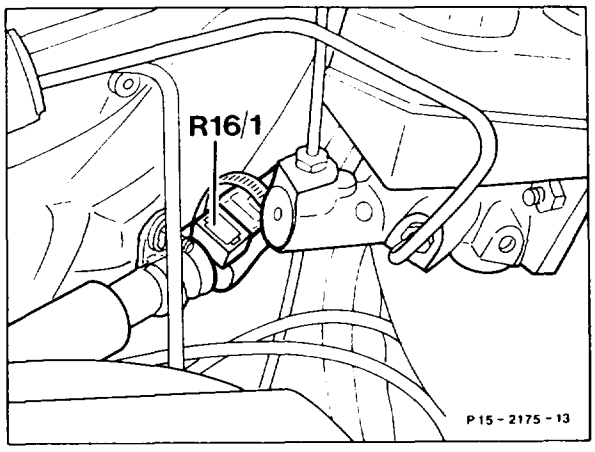

Model 126

The EZL reference resistor (R16/1) is connected to the wiring harness between the fuse and relay box and the brake booster.

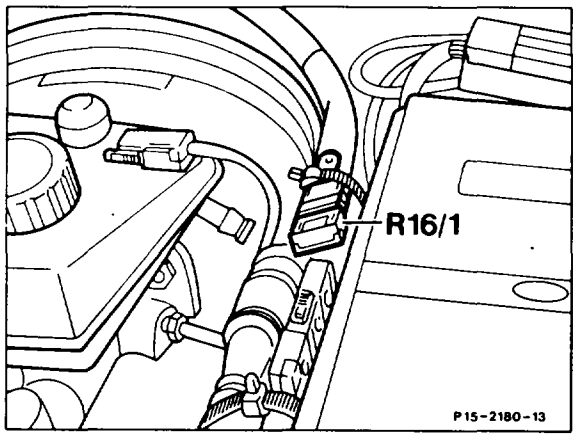

Model 201

The EZL reference resistor (R16/1) is connected to the engine wiring harness close to the start valve.

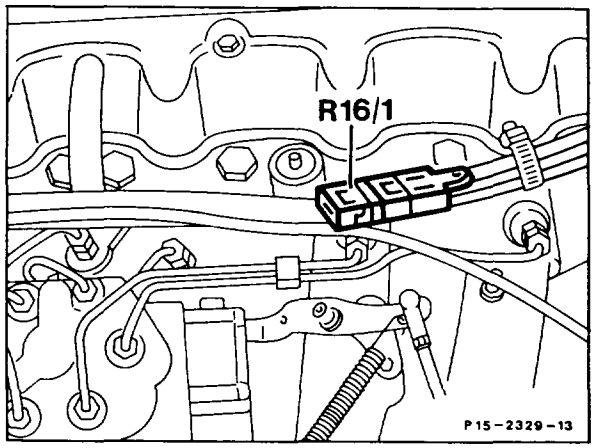

B. Adapting ignition timing point with EZL reference resistor to fuel

To adjust, pull out resistance trimming plug as far as the stop, turn to the appropriate position and push in again.

a) Vehicles in RÜF version with EZL resistance trimming plug, colour code white

These vehicles can be operated with leaded/unleaded premium fuel and leaded/unleaded regular fuel.

Position "S"
Ignition timing point for leaded and unleaded premium fuel.
Position "4" corresponds to "S."

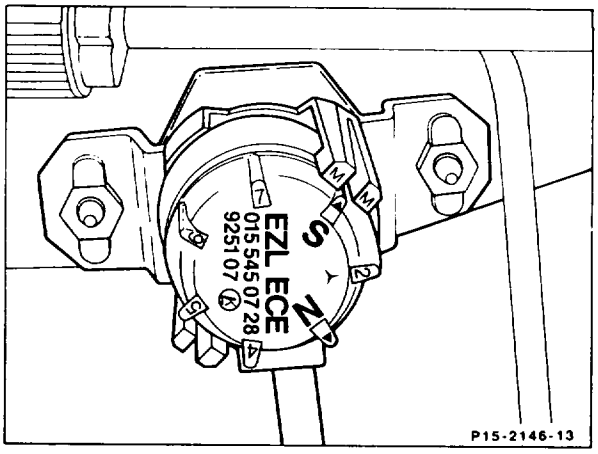

Note
When operating the vehicles in Indonesia, it is necessary to adapt the ignition timing point by turning the resistance trimming plug to position "N" because of the reduced fuel quality with an RON of 92.

Position "N"
Ignition timing point for leaded and unleaded regular fuel.
Position "6" corresponds to "N."

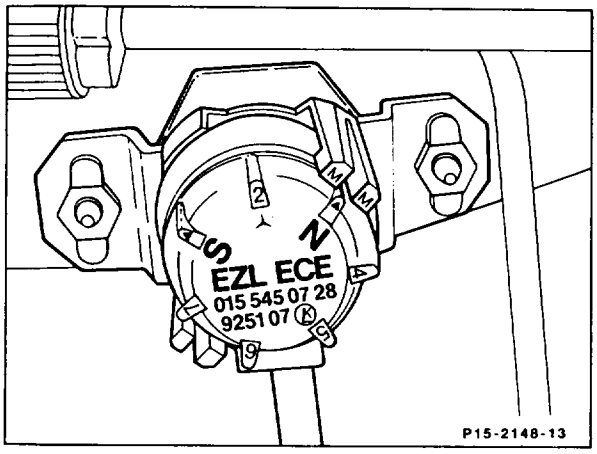

Correction position for workshop

Position "2" – "premium" correction
Correction position by retarding ignition timing point 3° if only poor premium available (RON 92).
Position "5" corresponds to "2."

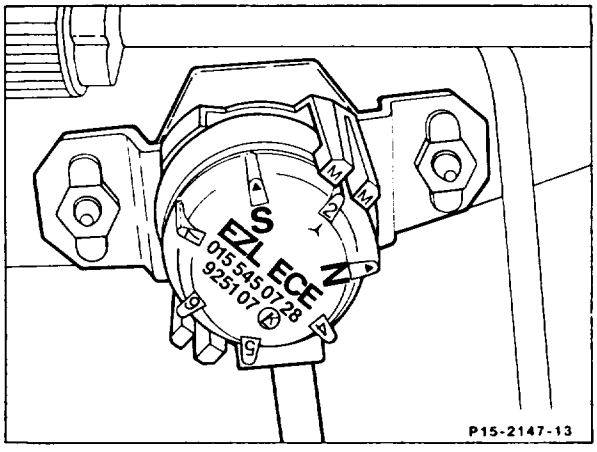

Position "7" – "regular" correction
Correction position by retarding ignition timing point 9° if only poor, unleaded regular fuel available (RON 89).

b) Vehicles in KAT version with EZL-KAT resistance trimming plug, colour code green

⚠

These vehicles may **only** be operated with **unleaded premium** or **unleaded regular** fuel.

Position "S"
Ignition timing point for unleaded premium fuel.

Note
When operating the vehicles in Indonesia, it is necessary to adapt the ignition timing point by turning the resistance trimming plug to position "N" because of the reduced fuel quality with an RON of 92.

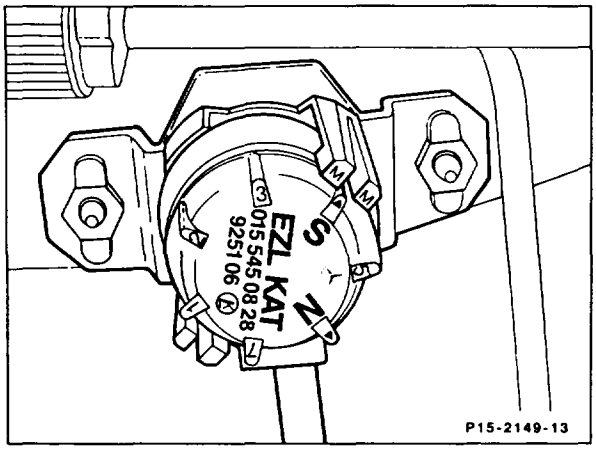

Position "N"
Ignition timing point for unleaded regular fuel.
Position "3" corresponds to "N."

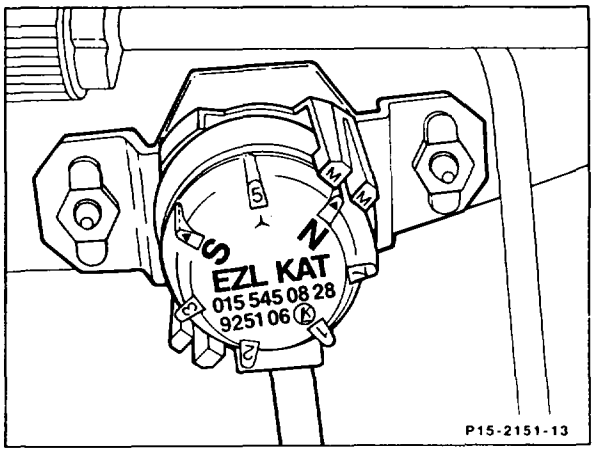

Correction position for workshop

Position "5" – "premium" correction
Correction position by retarding ignition timing point 3° if only poor, unleaded premium available (RON 92).

Position "7" – "regular" correction
Correction position by retarding ignition timing point 9° if only poor, unleaded regular fuel available (RON 89).

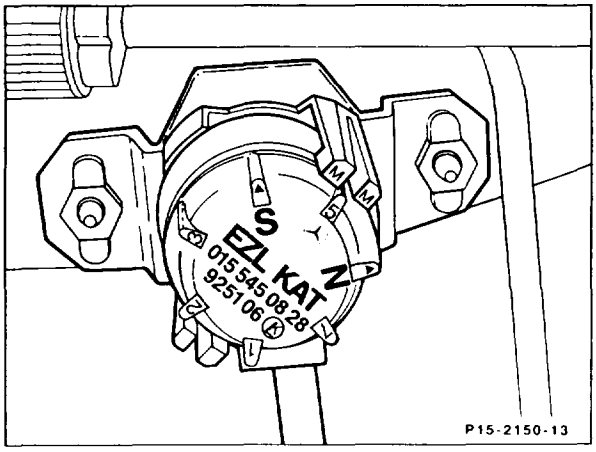

c) Vehicles with engine 103.980 with ECE resistance trimming plug, colour code white

⚠

These vehicles may **only be operated with leaded/unleaded premium fuel.**
If only poor premium fuel is available, the ignition timing point can be retarded 2 ° CA per plug position.

Position "1"
Ignition timing point for leaded premium fuel or unleaded "premium plus" fuel (RON 98).

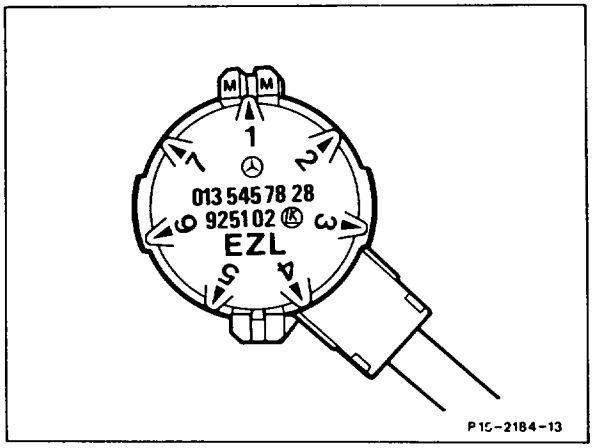

Position "3"
Ignition timing point for unleaded premium fuel (RON 95).

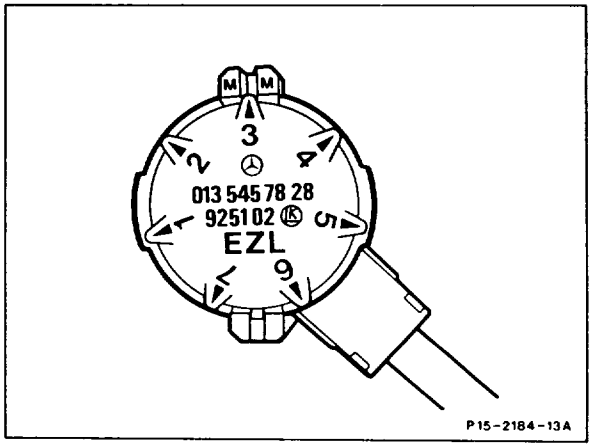

Operation no. of operation texts and work units or standard texts and flat rates:
15–1031.

A. Replacing

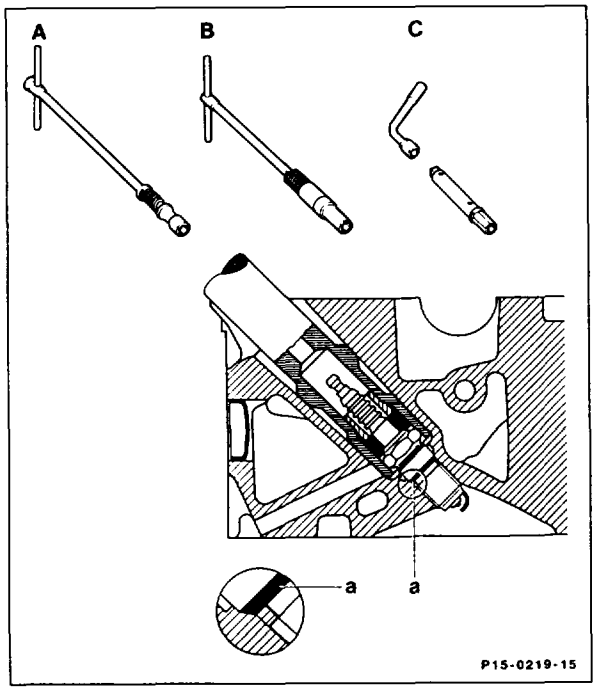

Spark plug connector	slacken by turning to right and left and pull off. If necessary, use special tool. Blow out recesses with compressed air.
Ignition cables	clean, when plugging in spark plug connectors, ensure ignition cables are correctly routed. Pay attention to firing order 1-3-6-2-4-5.

Spark plugs	remove and install; use only approved spark plug wrench (with Nm limitation "B"). A 102 589 02 09 00 B 102 589 01 09 00 C Vehicle tool kit

Installation note

Install only approved spark plugs with tapered seat (a).

Tightening torque 10–20 Nm.

Special tool

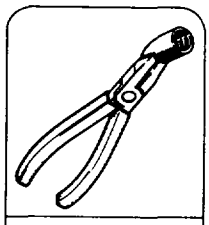

103 589 00 37 00
15

Note

When pulling the straight spark plug connectors off the spark plugs, pliers are available as a special tool which enable the spark plug connectors to be pulled off without damaging the connectors or the ignition cables.

B. Spark plug table

Engine 103.980
Basic and national version

Manufacturer	BERU	BOSCH	CHAMPION
Spark plugs for normal compression	14 K-7 DU 14 K-7 DUO	H 7 DC H 7 DCO	S 9 YC S 9 YCC
Spark plugs for low compression [3]	14 K-8 DU 14 K-8 DUO	H 8 DC H 8 DCO	S 10 YC S 10 YCC

Engine 103 (except engine 103.980 and 103.984)
Basic and national version except (AUS) (J) (USA), Korea, Taiwan

Manufacturer	BERU	BOSCH	CHAMPION
Spark plugs for normal compression	14 K-8 DU [1] 14 K-8 DUO	H 8 DC [1] H 8 DCO	S 10 YC S 10 YCC
Spark plugs for low compression [3]	14 K-9 DU 14 K-9 DUO	H 9 DC H 9 DCO	S 12 YC S 12 YCC

Engine 103.984
Basic and national version

Manufacturer	BERU	BOSCH	CHAMPION
Spark plugs for normal compression	14 K-8 DUO	H 8 DCO	S 10 YCC
Spark plugs for low compression [3]	14 K-9 DUO	H 9 DCO	S 12 YCC

Engine 103
National version [2] (AUS) (J) (USA), Korea, Taiwan

Manufacturer	BERU	BOSCH	CHAMPION
Spark plugs	14 K-9 DU 14 K-9 DUO	H 9 DC H 9 DCO	S 12 YC S 12 YCC

[1] 14 K-7 DU and H 7 DC spark plugs were fitted as standard up to about 02/87.
[2] The spark plugs are approved only for a max. speed of 160 km/h.
Spark plugs of the basic version must be installed in tourist vehicles and for sporting competitions.
[3] These spark plugs may also be used for driving in towns and short distances in winter up to a max. speed of 140 km/h on vehicles fitted with EZL ignition system.
With ε = 8.0 or without KAT with fuel-optimized compression ratio as of 07/92.

Electrode gap: 0.8 mm.
Tightening torque 10 - 20 Nm.

Note
Since 04/1988 Bosch spark plugs and since 09/88 Beru spark plugs have been installed, which have a central electrode with a larger diameter. These spark plugs are identified with an "O", e.g. 14K–7DUO.
Since 09/89 Champion spark plugs have been installed which have a ground electrode with a copper core. These spark plugs are identified with a "C", e.g. S10YCC.

Additionally approved spark plugs
Engine 103.980
The Beru silver spark plugs (Silverstone) are approved for retrofitting:
S1K in place of 14K–7DU(O)

⚠
The platinum spark plugs are no longer approved.

15–1250 Testing electronic ignition system with variable characteristics EZL

Operation no. of operation texts and work units or standard texts and flat rates:
15–1250.

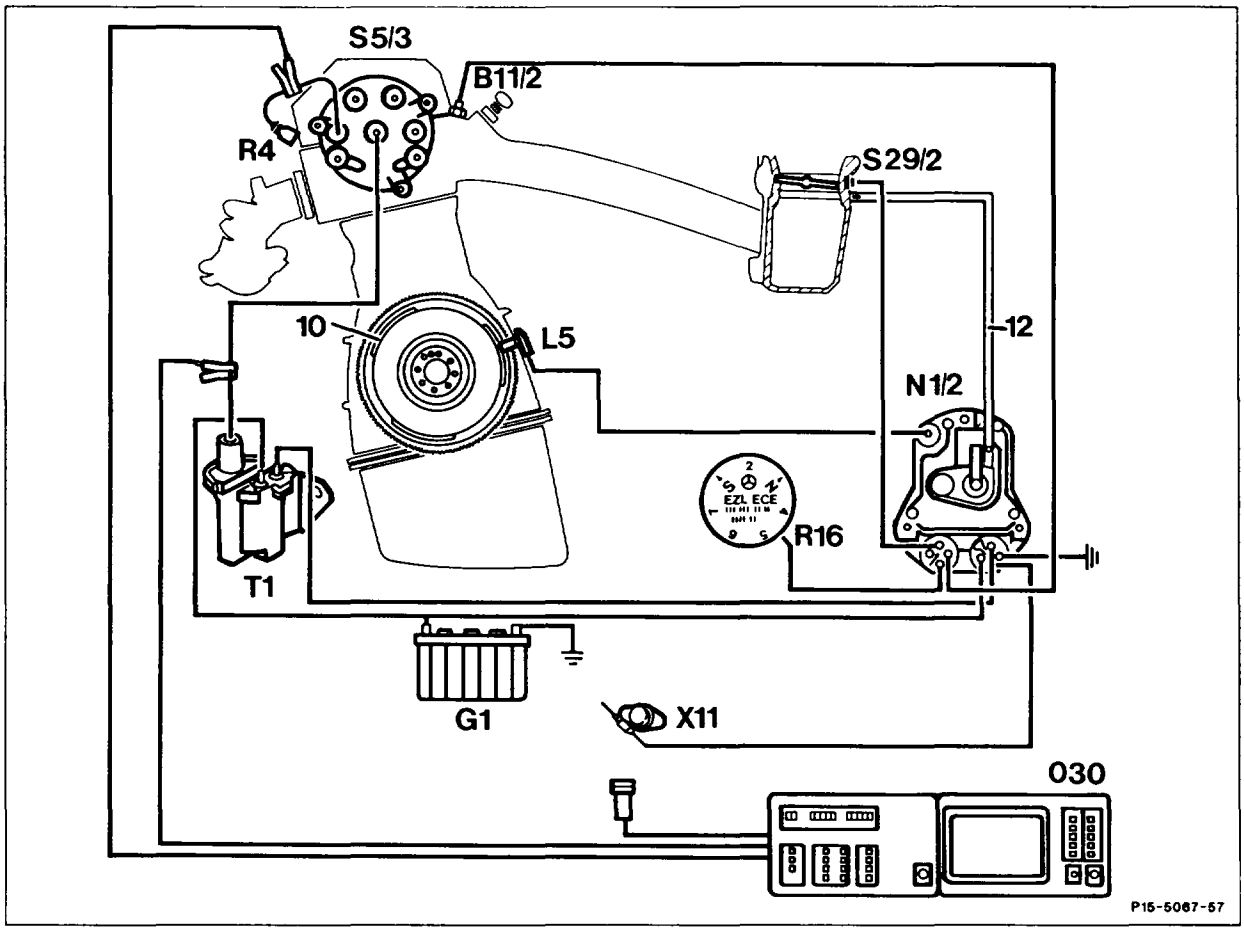

Connection diagram for engine tester with oscilloscope

B11/2	Coolant temperature sensor (EZL/KE, LH), 4-pin	S29/2	Throttle valve switch, full load/idle speed recognition
G1	Battery	T1	Ignition coil
L5	Crankshaft position sensor	X11	Diagnostic socket/terminal block, terminal TD
N1/2	EZL ignition control unit	10	Segments on flywheel/driven plate
R4	Spark plugs	12	Vaccum line
R16	EZL resistance trimming plug	030	Engine tester with oscilloscope
S5/3	High voltage distributor		

Special tools

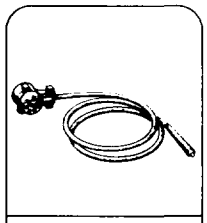

117 589 01 21 00
15

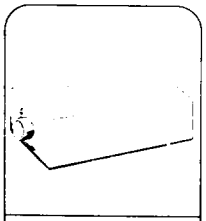

124 589 00 21 00
54

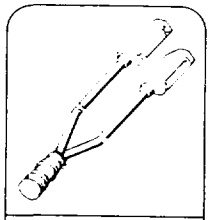

124 589 33 63 00
07 28 54

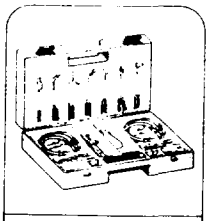

201 589 00 99 00
15 54

Commercially available tools and testers

Designation	e.g. Make, order no.
Multimeter	Sun, DMM-5 Fluke, Multimeter 23 Hermann, Avometer 2003
Engine tester	Hermann, Datascope 9800 Bosch, MOT 301/400 Sun, 2110 BEAR, D AC E

⚠

Pay attention to the safety regulations when working on the ignition system (15–0505). Switch off ignition when plugging in and unplugging the connectors at the EZL ignition control unit.

Note

If dealing with faults regarding handling, first of all test the ignition. Then, continue fault finding at the KE injection system.

The test is divided into two sections:

a) Engine not running

In this section the basic functions of the ignition system are tested.
If the fault cannot be rectified, continue trouble-shooting in section b), "Engine running."

b) Engine running

Faults in the ignition timing or at the corresponding components can affect vehicle handling.

Test data

Resistances (test data from 0 – 100 °C)

Ignition coil	primary (terminals 1 and 15)	Ω	0.3–0.6
Ignition coil	secondary (terminals 1 and 4)	kΩ	8–13
Position indicator	coil resistance (terminals 7 and 31d)	Ω	680–1200
	insulation (terminal 7 and ground)	kΩ	≥ 200
Distributor cap per terminal, distributor rotor, spark plug connector		Ω	700–1300

Voltages, engine not running, ignition switched on

Battery voltage	V	> 11.5
Terminals 15 and 31 (contacts 5 and 2 diagnostic socket)	V	> 11
Between terminals 15 and 1 (contacts 5 and 4 diagnostic socket)	V	0
4-pin round connector, terminals 15 and 31	V	> 11
4-pin round connector, terminals 16 and 31	V	> 11

Voltages at starting speed

Battery voltage	V	≥ 10
Ignition coil terminal 15	V	≥ 10
Ignition coil terminal 1	V	8.5–10.5

Voltages at idle speed

Battery voltage	V	13–14.5
Ignition coil terminal 15	V	13–14.5
Ignition coil terminal 1	V	12.5–14

Dwell angle

At starting speed	1 – 30°
At 3200 rpm	24 – 53°

Ignition timing point at starting speed	in ° KW	TDC ± 2°

EZL ignition timing point

Engine	EZL ignition control unit	Engine speed 1/min	Ignition timing point in ° CA before TDC		
			Resistance trimming plug position or type of fuel	without vacuum	with vacuum
Basic version KAT/RÜF and (CH) KAT, (S) KAT					
103.940 103.941 103.942 103.943	003 545 95 32 003 545 96 32 005 545 84 32 005 545 86 32 006 545 73 32 006 545 75 32 008 545 61 32 008 545 63 32 011 545 88 32 011 545 89 32	3200	S	25–29	40–44
			N	19–23	
		Idle speed	S and N	7–11	7–11
103.980	003 545 14 32 003 545 15 32	3200	1/ leaded premium	23–27	39–43
		Idle speed		8–13	8–13
		3200	3/ unleaded premim	19–23	39–43
		Idle speed		8–13	8–13
103.981 103.983 103.985	004 545 44 32 004 545 46 32 005 545 85 32 005 545 87 32 006 545 74 32 006 545 76 32 007 545 86 32 007 545 87 32 008 545 62 32 008 545 64 32	3200	S	27–31	40–44
			N	21–25	40–44
		Idle speed	S and N	6–11	6–11
103.982	004 545 44 32 004 545 46 32 005 545 85 32 005 545 87 32 006 545 74 32 006 545 76 32				
103.984	007 545 86 32 007 545 87 32				
National version (CH) 1986, (S) 1986 [1])					
103.981 103.983	004 545 69 32 005 545 49 32 005 545 88 32	3200	S	29–33	40–44
			N	23–27	
		Idle speed	S and N	TDC ± 2	TDC ± 2

[1]) For (CH) KAT, (S) KAT, same values as basic version KAT.

EZL ignition timing point

Engine	EZL ignition control unit	Engine speed 1/min	Ignition timing point in ° CA before TDC		
			Resistance trimming plug position or type of fuel	without vacuum	with vacuum
National version (AUS)					
103.940 103.942	005 545 84 32 005 545 86 32 006 545 73 32 006 545 75 32 008 545 61 32 008 545 63 32	3200	Reference resistor 220 Ω	19–23	40–44
		Idle speed		7–11	7–11
103.981 103.983	004 545 44 32 004 545 46 32 005 545 85 32 005 545 87 32 006 545 74 32 006 545 76 32 008 545 62 32 008 545 64 32	3200	Reference resistor 220 Ω	21–25	40–44
		Idle speed		6–11	6–11
National version (J)					
103.940 103.942	005 545 84 32 005 545 86 32 006 545 73 32 006 545 75 32 008 545 61 32 008 545 63 32	3200	Reference resistor 750 Ω	25–29	40–44
		Idle speed		7–11	7–11
103.981 103.983 103.985	004 545 44 32 004 545 46 32 005 545 85 32 005 545 87 32 006 545 74 32 006 545 76 32 008 545 62 32 008 545 64 32	3200	Reference resistor 750 Ω	27–31	40–44
		Idle speed		6–11	6–11
National version (USA)					
103.940 103.942	005 545 84 32 005 545 86 32 006 545 73 32 006 545 75 32 008 545 61 32 008 545 63 32 008 545 95 32 009 545 79 32	3200	Reference resistor 750 Ω	25–29	40–44
		Idle speed		7–11	7–11
103.981 103.983	004 545 44 32 004 545 46 32 005 545 85 32 005 545 87 32 006 545 74 32 006 545 76 32 008 545 96 32 009 545 80 32	3200	Reference resistor 750 Ω	27–31	40–44
		Idle speed		6–11	6–11

Resistances of EZL resistance trimming plug (R16)

Position	Resistance	EZL resistance trimming plug		
	kΩ	"EZL-ECE"	"EZL-KAT"	"EZL"
A	∞	S	1	1
B	2.4	2	2	2
C	1.3	N	3	3
D	0.75	4	S	4
E	0.47	5	5	5
F	0.22	6	N	6
G	0	7	7	7

a) Engine not running

Symbols for testers

—‹ Contact

—▬ Connector

Symbols for test mode with multimeter

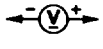
Multimeter
DC voltage mode

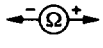
Multimeter
Resistance mode

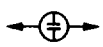
Oscilloscope

Preconditions for test

- Spark plugs, ignition cables, distributor rotor and distributor cap in proper mechanical and electronic order.
  Test e.g. by visual inspection, measuring resistance and ignition oscilloscope.
- Battery voltage 11 – 14 V

Note

If the specification of a main test step, e.g. test step 1.0, is in order, continue with the next main test step, e.g. test step 2.0.
If the specification of a main test step, e.g. test step 1.0, is not achieved, continue test with sub-test step, e.g. test step 1.1.

See appropriate wiring diagram volume for wiring diagrams.

Test step	Test scope	Test connection	Operation/ Requirement	Specification	Possible cause/Remedy
1.0	**Voltage supply**	N1/2 tml. 31 tml. 15	Unplug 4-pin round connector at EZL control unit. Ignition: **ON**	11–14 V	Test voltage supply via ignition lock, Test ground cable, Test wiring and contacts according to wiring diagram, replace if necessary
1.1	Ground cable	N1/2 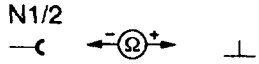 tml. 31	Ignition: **OFF**	< 1 Ω	Open circuit in wiring
2.0	**Crankshaft position sensor (L5)**	L5 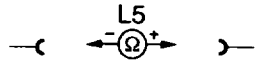 tml. 31d tml. 7	Ignition: **OFF** Unplug crankshaft position sensor connector (L5) at EZL control unit.	680–1200 Ω	Replace crankshaft position sensor (L5)
2.1		L5 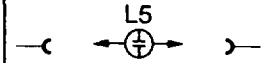 tml. 31d tml. 7	Unplug crankshaft position sensor connector (L5) at EZL control unit. Engine: **start** Starting speed.	U_S ≥ 1 V see "diagram crankshaft position sensor signal (L5)"	Signal too small or no signal → replace position sensor, different voltage levels → test segments on flywheel/driven plate (visual check) Signal in order → replace EZL control unit
2.2	Insulation at sensor coil	L5 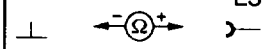 tml. 7	Ignition: **OFF** Unplug crankshaft position sensor connector (L5) at EZL control unit.	≥ 200 kΩ	Visual check of control cable, Replace crankshaft position sensor (L5)

Test step	Test scope	Test connection	Operation/ Requirement	Specification	Possible cause/Remedy
3.0	**Dwell angle at starting speed**	Engine tester	Engine: **start**	1–30° or 1–50 %	Dwell angle not to tolerance → replace EZL control unit No dwell angle → test no-load current cutoff
3.1	No-load current cutoff	X11 5 — ◄ (V) ► — 4	Ignition: **ON**	0 V	Replace EZL control unit and ignition coil
4.0	**Ignition coil (T1) primary**	T1 tml. 1 ◄ (Ω) ► tml.15	Ignition: **OFF** Disconnect cables at ignition coil	< 1 Ω	Replace ignition coil
5.0	**Ignition coil (T1) secondary**	T1 tml. 1 ◄ (Ω) ► tml. 4	Ignition: **OFF** Disconnect cables at ignition coil	8–13 kΩ	Replace ignition coil
6.0	**Primary voltage**	Engine tester ◄ ⏚ ► Oscilloscope image: Parade primary	Engine: **start**	200 – 350 V	Replace EZL control unit
7.0	**Primary current limiting**	Engine tester ◄ ⏚ ► Oscilloscope image: Superposition secondary	Engine: **start**	See "diagram good image superposition" (Diagnosis Manual Engine, Vol. 1, Register C)	Replace EZL control unit

Test step	Test scope	Test connection	Operation/ Requirement	Specifi-cation	Possible cause/Remedy
8.0	**Ignition voltage**	Engine tester 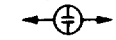 Oscilloscope image: Parade secondary	Engine: **start**	8 – 20 kV	See test steps 8.1–8.5
8.1	Distributor cap (each terminal individually)	Distributor cap 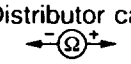 inside outside	Ignition: **OFF** Remove distributor cap. Disconnect ignition cables.	700–1300 Ω per terminal	Replace distributor rotor
8.2	Distributor rotor	Distributor rotor 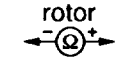 Middle Peak	Ignition: **OFF** Remove distributor cap.	700–1300 Ω and visual check	Replace distributor rotor
8.3	Ignition cable terminal 4 at igntion coil (T1)	T1 S5/3 tml. 4 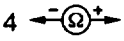 tml. 4	Ignition: **OFF** Disconnect ignition cable terminal 4 at ignition coil (T1) and at distributor cap.	< 1 Ω	Replace ignition cable terminal 4
8.4	Ignition cables with spark plug connector	Ignition cable Spark plug connector 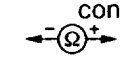	Ignition: **OFF** Disconnect ignition cable at HT distributor (S5/3) and spark plug connector	700–1300 Ω per ignition cable	Replace ignition cable with spark plug connector
8.5	Spark plugs	Visual inspection	Ignition: **OFF** Remove all spark plugs.	Electrode gap 0.8 mm	Replace according to condition
9.0	**Ignition timing point at starting speed**	Engine tester	Engine: **start** Starting speed	TDC ±2°	Test ignition coil and HT distributor

b) Engine running

Symbols for testers

Contact

Connector

Preconditions for test

- Engine at operating temperature.
- Coolant temperature < 95 °C.
- Test ignition timing point at idle speed.
- Test ignition timing point at 3200/min with and without vacuum (detach vacuum line at EZL control unit).
  Pay attention to resistance trimming plug position.
  Switch off engine during test only if stated.

Symbols for test mode with multimeter

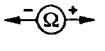
Multimeter
Resistance mode

Oscilloscope

Pay attention to notes for work on breakerless transistorized ignition system (15–0505).

Note

If the specification of a main test step, e.g. test step 2.0, is in order, continue with the next main test step, e.g. test step 3.0.
If the specification of a main test step, e.g. test step 2.0, is not achieved, continue test with sub-test step, e.g. test step 2.1.

See appropriate wiring diagram volume for wiring diagrams.

Test step	Test scope	Test connection	Operation/ Requirement	Specification	Possible cause/Remedy
1.0	**Ignition timing point**	Engine tester	Engine: **start** Idle speed	See table of ignition timing points	Test EZL resistance trimming plug (R16), Test EZL reference resistor (R16/1) (Pay attention to national version and Part no.), Test throttle valve switch, full load/idle speed recognition (S29/2), Test pressure sensor, Test coolant temperature sensor (B11/2), Coolant temperature >95 °C
2.0	**EZL resistance trimming plug (R16)** [1]	⊥ Ω R16 — 3	Ignition: **OFF** Compare engine version and resistance triming plug inscription. Unplug 4-pin coupling at EZL control unit.	See table of resistances of EZL trimming plug (R16)	Test Ω values in resistance trimming plug, Replace resistance trimming plug

[1] Except (AUS) (USA) (J)

Test step	Test scope	Test connection	Operation/ Requirement	Specification	Possible cause/Remedy
2.1	EZL resistance trimming plug (R16) [1]	R16 Middle — B–G	Ignition: **OFF** Compare engine version and resistance trimming plug inscription (see table resistances EZL trimming plug (R16)). Unplug 4-pin coupling at EZL control unit. Test clockwise between middle and outer connector pins.	A ∞ B 2.4 kΩ C 1.3 kΩ D 750 Ω E 470 Ω F 220 Ω G 0 Ω	Replace EZL resistance trimming plug
2.2	EZL reference resistor (R16/1) [2]	R16/1 ⊥ — 3	Ignition: **OFF** Pay attention to national version and Part no., see table. Unplug 4-pin coupling at EZL control unit.	∞	Replace EZL resistance trimming plug
2.3	EZL reference resistor (R16/1) [2]	R16/1 2 — 1	Ignition: **OFF** Unplug EZL reference resistor.	Part no. and Ω value see table EZL reference resistor (R16/1).	Replace EZL resistance trimming plug

[1] Except (AUS) (J) (USA)

[2] Only (AUS) (J) (USA)

Test step	Test scope	Test connection	Operation/ Requirement	Specification	Possible cause/Remedy
3.0	**Throttle valve switch, full load/idle speed recognition (S29/2)**	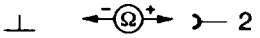	Ignition: **OFF**	Idle position approx. 0 Ω. Full load approx. 0 Ω. Part load position ∞. See also table "resistances at throttle valve switch full load/ idle speed recognition (S29/2)"	Adjust or replace throttle valve switch, Rectify open circuit in wiring according to wiring diagram
4.0	**Pressure sensor**	Engine tester	Vacum line at EZL control unit disconnected. Coupling disconnected from throttle valve switch. Engine: **start** Engine speed/ gear lever position: idling.	When vacuum line connected, ignition timing point must advance.	Check vacuum line from intake manifold to EZL control unit for leaks. If no fault found, replace EZL control unit.

Test step	Test scope	Test connection	Operation/ Requirement	Specification	Possible cause/Remedy
5.0	**Coolant temperature sensor (B11/2)**	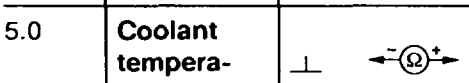 N1/2 — 1	Ignition: **OFF** Unplug 4-pin coupling at EZL control unit, test Ω values at two temperatures	Ω values, see diagrammed coolant temperature sensor (2/4-pin) Example: + 20 °C 2.28–2.72 kΩ + 80 °C 290–364 Ω	Replace cable according to wiring diagram. Replace coolant temperature sensor (B11/2)
6.0	**Ignition timing point**	Engine tester	Detach vacuum line at EZL control unit. Engine: **start**	See table ignition timing points	Replace EZL ignition control unit
7.0	**Dwell angle at 3200 rpm**	Engine tester	Vacuum line and 4-pin coupling EZL control unit connected. Engine: **start**	24–53°	Replace EZL ignition control unit

Test step	Test scope	Test connection	Operation/ Requirement	Specification	Possible cause/Remedy
8.0	**HT distributor (S5/3)** ⚠ Pay close attention to safety notes (15–0505).	Visual check	Ignition: **OFF** Remove distributor cap.		Distributor cap, mechanical damage in HT distributor, replace HT distributor if necessary.
9.0	**Interference supression resistors, distributor cap, distributor rotor, spark plug connector**	⊖Ω⊕	Ignition: **OFF** Remove distributor cap. Measure resistances individually.	1 kΩ	Replace faulty parts
10.0	**Ignition coil**	Engine tester ⊖⏚⊕ Oscilloscop image: Parade	Ignition: **ON** Engine: **start** Idle speed	Good/ poor, see analyzing oscilloscope image (Diagnosis Manual, Engine, Vol. 1, Register C).	Replace ignition coil

[1])
Ignition voltage: (average value) 6 – 16 kV. Difference of cylinders to each other ≤3 kV.
Ignition voltage rise: the ignition voltage measured at idle speed must rise by not more than 6 kV when engine speed is increased up to 3000 rpm by blipping the throttle.
Combustion curve starting point: 0.6 – 1.2 kV. Difference of the cylinders to each other ≤0.3 kV.
Combustion time: 1.9 – 2.5 ms. Difference of the cylinders to each other ≤0.3 ms.

Round power supply connector at EZL ignition control unit (N1/2)

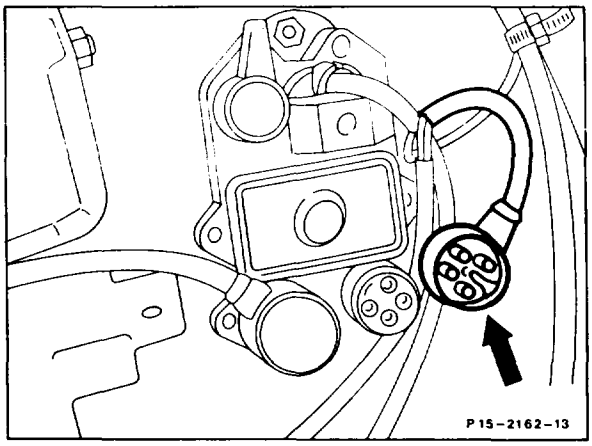

EZL ignition control unit (N1/2)

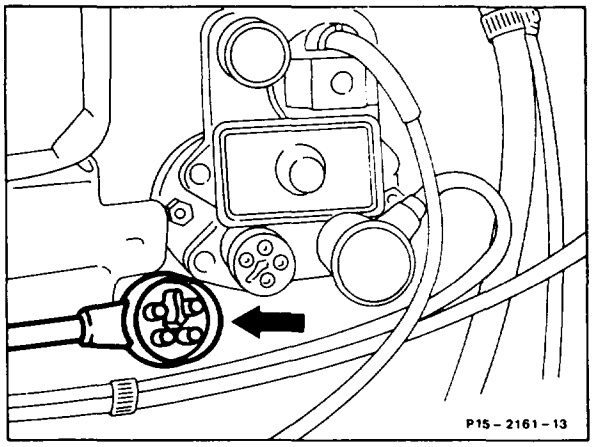

Arrow 4-pin connector sensor

EZL ignition control unit (N1/2)

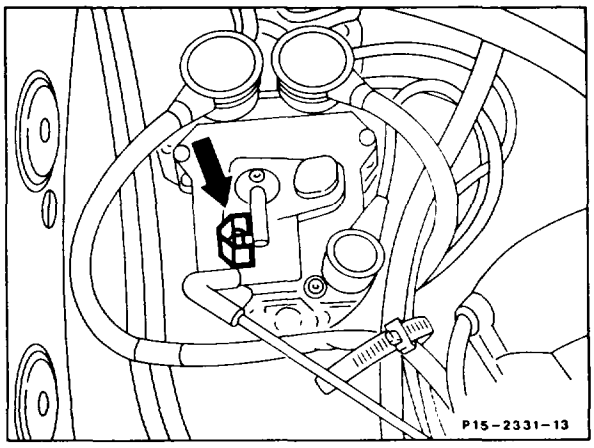

Arrow Vacuum line

EZL resistance trimming plug (R16)

A	–	
B	2.4	kΩ
C	1.3	kΩ
D	0.75	kΩ
E	0.47	kΩ
F	0.22	kΩ
G	0	kΩ

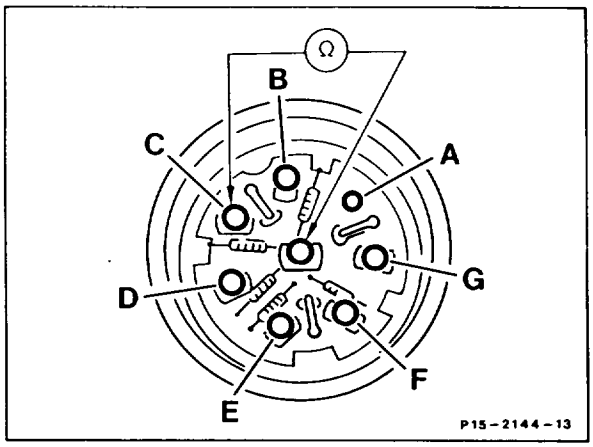

Bottom part of connector, EZL resistance trimming plug (R16)

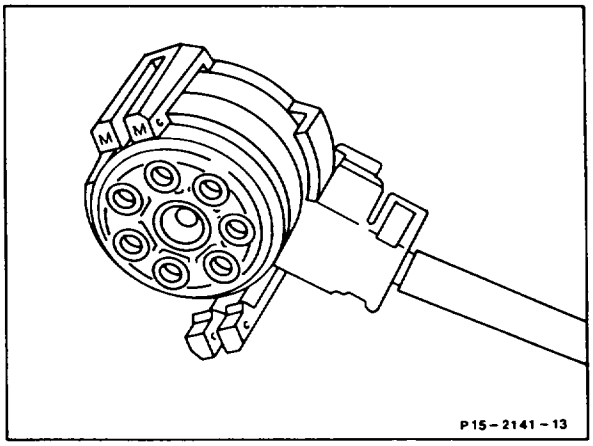

EZL reference resistor (R16/1)

Part no.	Resistance	National version
000 540 22 81	220 Ω	AUS
000 540 24 81	750 Ω	J USA

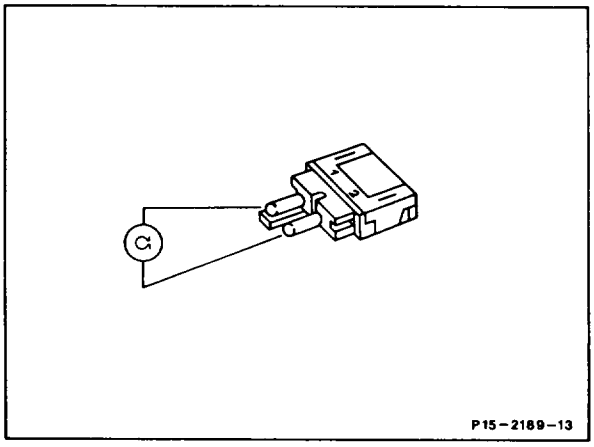

Diagnostic socket/terminal block (X11)

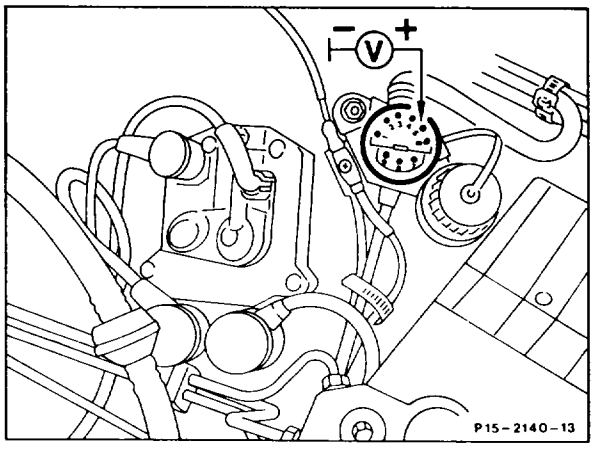

Terminal TN

EZL/KE, LH) coolant temperature sensor, 4-pin (B11/2)

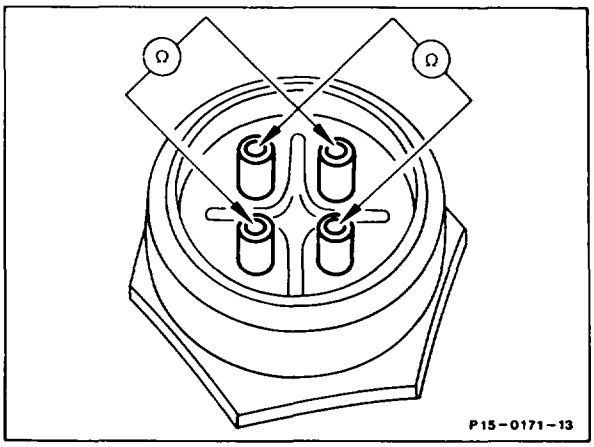

Connect 4-pin connector, coolant temperature sensor (B11/2)

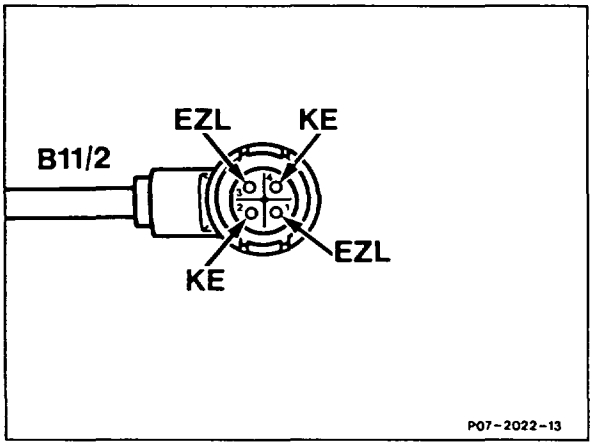

Pin assignment (positions stamped in connector)

1 EZL/AKR temperature sensor
2 KE temperature sensor
3 Ground, EZL/AKR ignition control unit
4 Ground, KE control unit

Coolant temperature sensor (B11/2), 2-pin

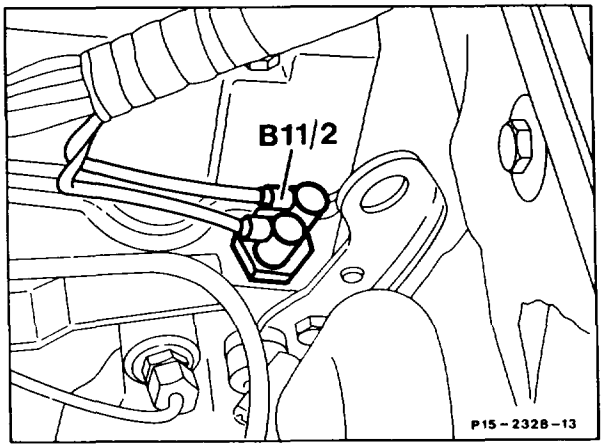

Diagram, coolant temperature sensor (2/4-pin)

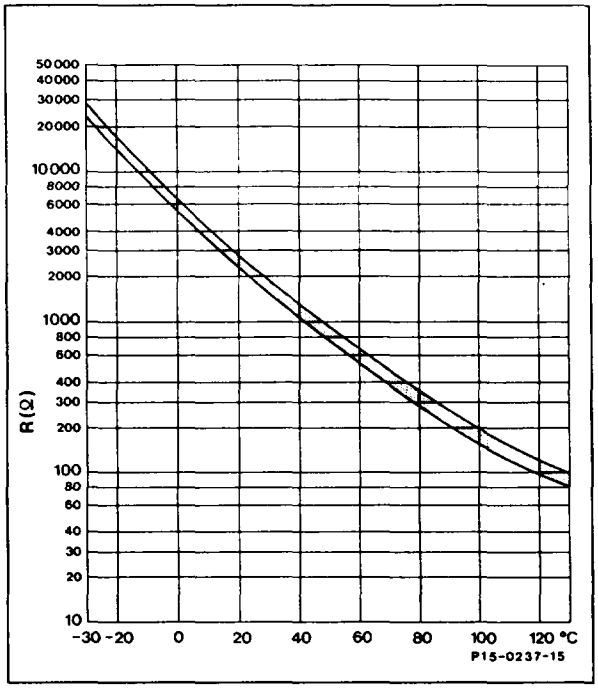

High voltage distributor (S5/3)

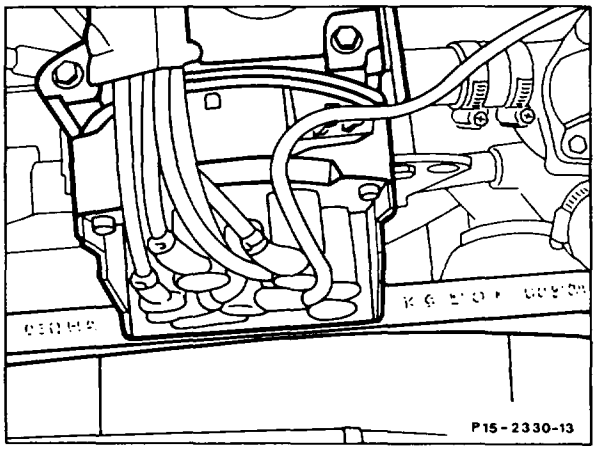

Igition coil (T1)

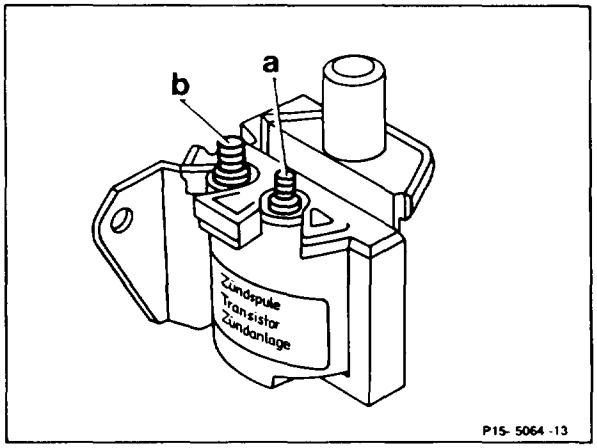

a Terminal 1
b Terminal 15

Connector, crankshaft position sensor (L5)

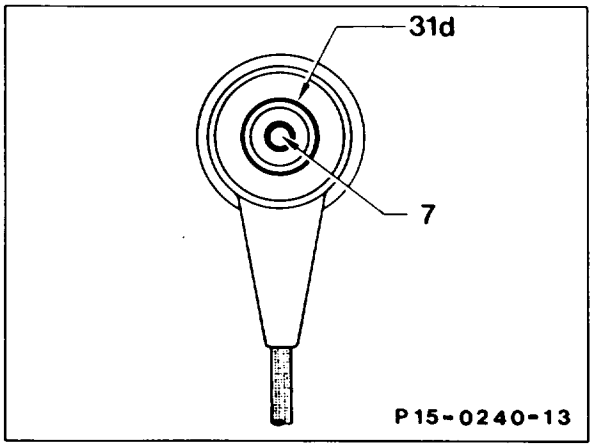

Diagram, crankshaft position sensor (L5) signal

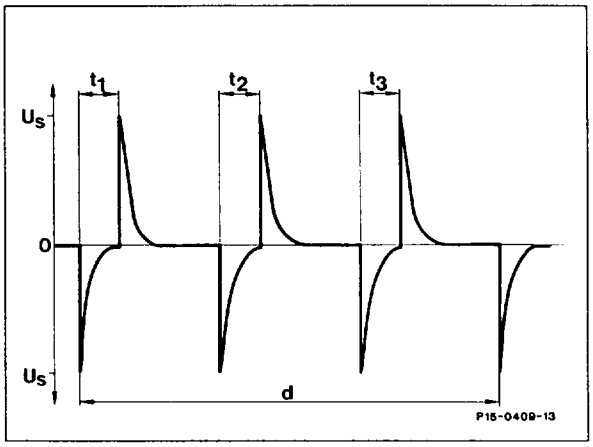

Plug connection, throttle valve switch full load/idle speed recognition (S29/2x1)

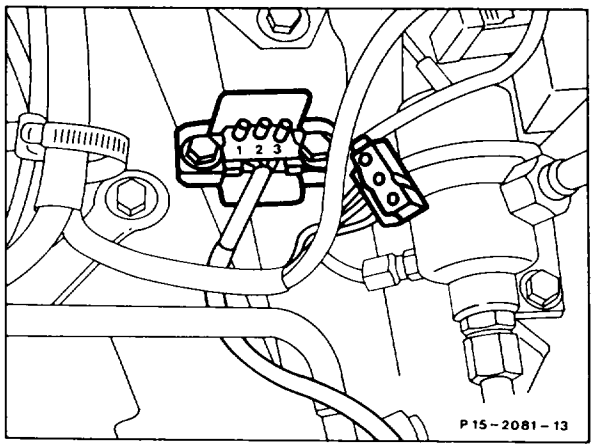

Resistances at throttle valve switch full load/idle speed recognition (S29/2)

Idle speed	approx. 0 Ω
Full load	approx. ∞

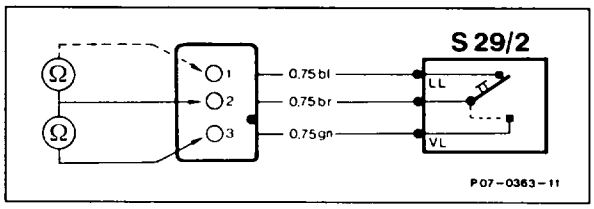

LL Idle contact
VL Full load

15–2093 Removing and installing EZL ignition control unit

Preceding work:

Operation no. of operation texts and work units or standard texts and flat rates:
15–2093.

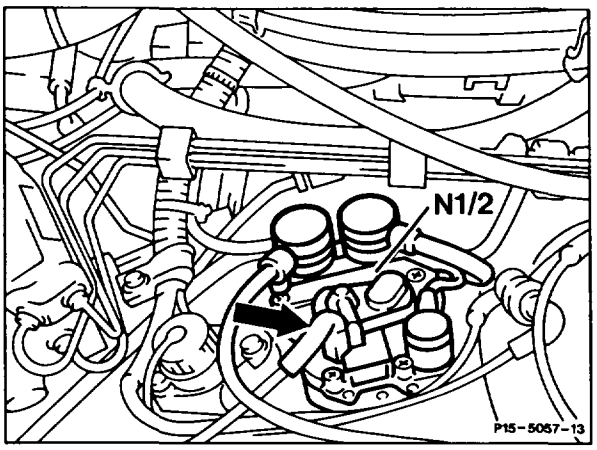

Basic version

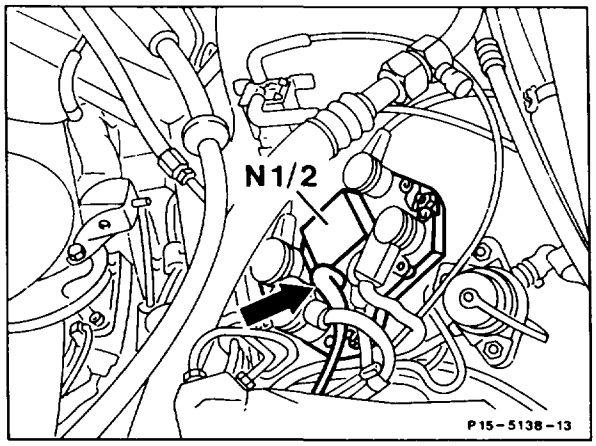

National version (USA) as of model year 1990

Vacuum connection (arrow)	disconnect, connect.
All connectors	unplug, plug in.
Fastening nuts for EZL ignition control unit (N1/2)	unscrew, screw on. Pay attention to washers. Take off EZL ignition control unit, fit on.

Note

The ignition control unit is provided on the rear with heat conducting paste to improve heat dissipation and covered with a heat-conducting protective sheet. The protective sheet must not be removed.

KE control unit fault memory . . . . . read, erase if necessary (see Diagnosis Manual Engine, Volume 2, Register 0).

Note
Stored faults which may occur because of disconnected cables or simulation during test work, must be erased in the fault memory after completing all work.

Note
Models 107, 124, 126, 201
EZL ignition control unit with modified ignition map to prevent load change jolts when shifting gears with manual transmission.

Production breakpoint: March 1987

Engine	Part no.
103.94	006 545 73 32 006 545 75 32 alternatively
103.98	006 545 74 32 006 545 76 32 alternatively

Model 129
Modified software, because of starting off in 1st gear (automatic transmission)

Production breakpoint: 03/92

Engine	as of vehicle end no.
103.984	F057393

15–2133 Removing and installing crankshaft position sensor

Operation no. of operation texts and work units or standard texts and flat rates:
15–2133.

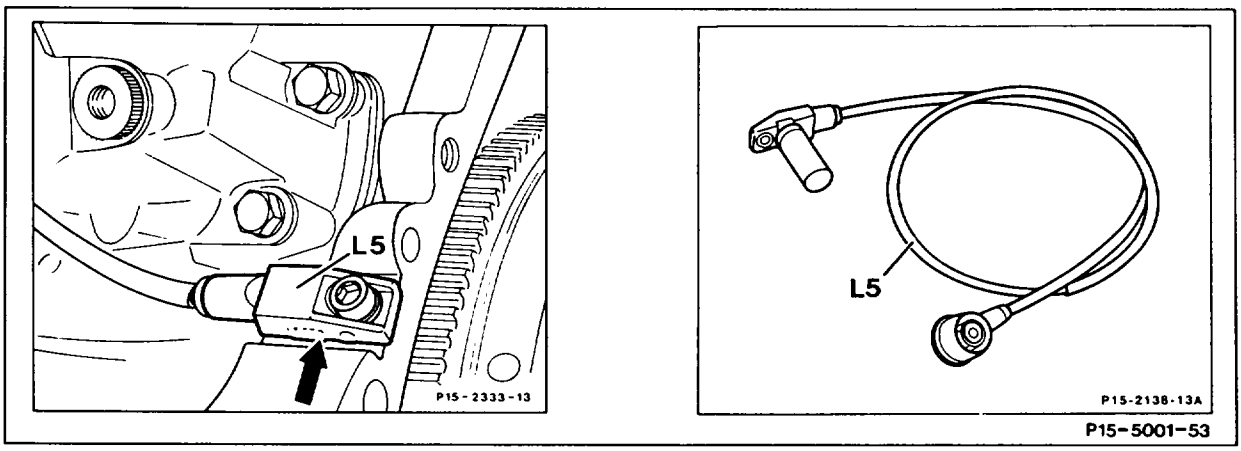

Screw (arrow)	unscrew, screw in. Tightening torque 10 Nm as reference value.
Crankshaft position sensor (L5)	remove, install. Take cable to EZL/AKR control unit out of cable shaft.
KE control unit fault memory	read, erase if necessary. (see Diagnosis Manual Engine, Volume 2, Register 0).

Note
Stored faults which may occur because of disconnected cables or simulation during test work, must be erased in the fault memory after completing all work.

⚠
Vehicles with manual transmission as of 08/89: On engines with two mass flywheel (ZMS), a spacer disc must be placed below the crankshaft position sensor (L5) otherwise the segment will rub on the sensor.

Note

Model 124

Crankshaft position sensors of AB-Elektronik or Bosch are installed alternatively.

Production breakpoint: January 1986

Model	Engine	Engine end no. manual transmission	Engine end no. automatic transmission
124.026	103.940	002636	003779
124.030	103.983	002892	018378

15–2193 Removing and installing engine systems control unit (N16)

Operation no. of operation texts and work units or standard texts and flat rates:
15–2193.

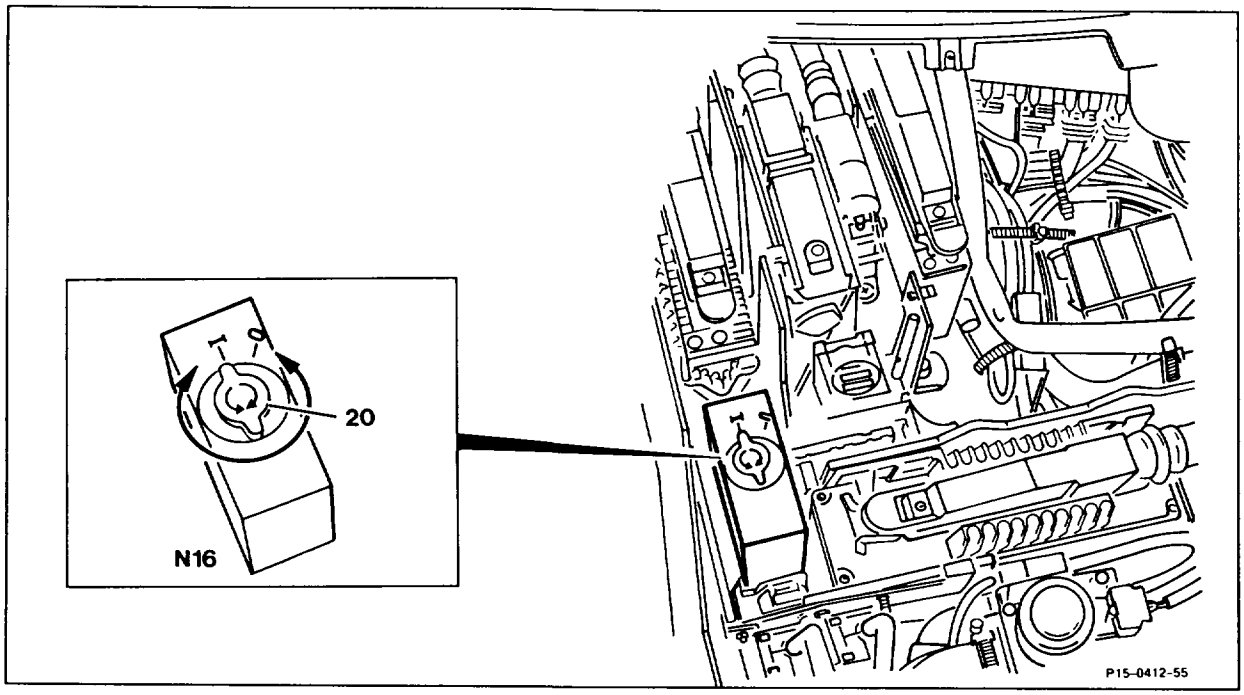

Removal

Rotary knob (20)	turn to position "0."
Engine systems control unit (N16)	pull off upward.

Installation

Engine systems control unit (N16)	insert from above into coupling.
Rotary knob (20)	turn to position "I."

Note

Check control unit is tightly seated.

Testing

See test program 07.3–0121.

Note

Models 124, 126, 201

Software revision, storage of fault code 3 discontinued

Production breakpoint: July 1990

Model	Engine	Vehicle ident end no.	Basic version	National version (USA)	(AUS)	(J)
124.026	103.940	B 312083	x	x	–	–
124.030	103.983	B 312083	x	x	–	–
124.230	103.985	B 312083	x	x	–	–
126.024/025	103.981	A 564914	x	x	–	–
201.029	103.942	F 759713	x	x	–	–

15–3010 Removing and installing high voltage distributor

Operation no. of operation texts and work units or standard texts and flat rates:
15–3010.

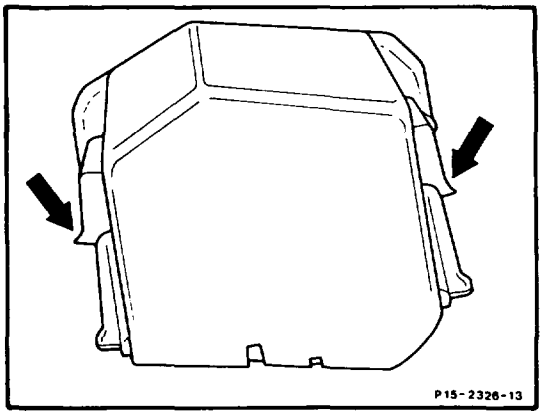

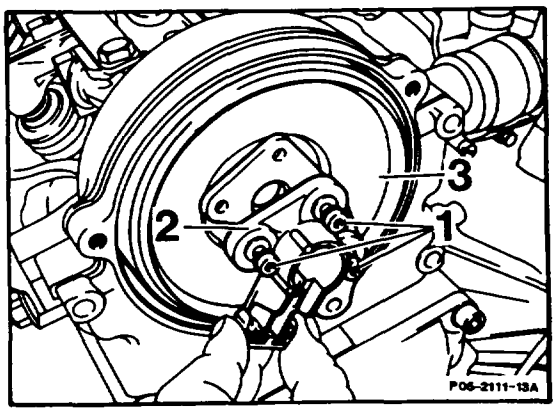

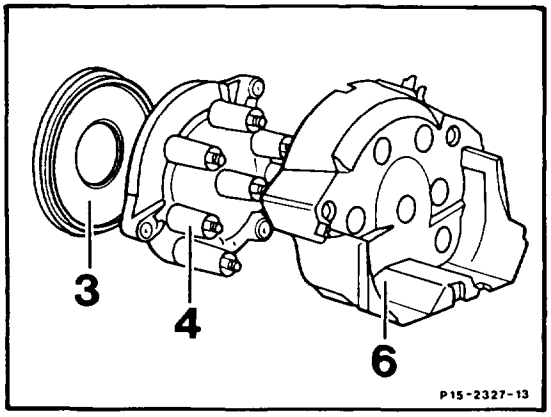

P15-0411-57

⚠

Pay attention to notes regarding work on breakerless transistorized ignition system (15–0505).

Protective on HT distributor	pull off upward by unclipping the two catches (arrows), fit on.
Ignition cables	unplug, plug in.

Installation note

The ignition cables on the distributor cap should be installed in the order 1-3-6-2-4-5 so that the ignition cables can be properly routed.

Screening cap (6), distributor cap (4) . . . . . take off by slackening the three hexagon socket screws, fit on by tightening screws.

⚠

When removing and installing distributor cap (4), pay particular attention to ensuring that the carbon brush does not strike the dome of the distributor rotor (2) and is damaged.

Distributor rotor (2) . . . . . remove from follower by slackening screws (1), fit on by tightening screws.
Tightening torque 2.5 Nm.

Follower . . . . . remove by slackening hexagon socket screw, install by tightening screw.
When installing, pay attention to locating pin and follower screw.

⚠

As two different versions of followers have been installed, pay attention to illustration note as well as to data in the table "follower versions."

Sealing washer (3) . . . . . take off, insert. Check O-ring.

Note

After removing and installing the HT distributor, it is not necessary to set the ignition timing point. The ignition timing point is specified by the EZL ignition control unit.

Note

The groove (5a) in the follower (5) must engage in the camshaft over the pin (arrow). Pay particular attention to the different followers (5).

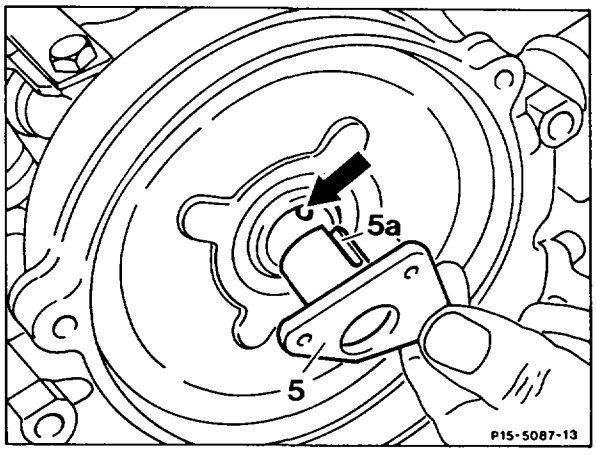

Follewer versions

Follower	1st version	2nd version
Material	Aluminium	Steel
Screw	M8 × 29	M7 × 26
Tightening torque	21 Nm	16 Nm

Operation no. of operation texts and work units or standard texts and flat rates:

A. Preconditions for test

Electric cables at battery and alternator and also ground cable between engine and body	check whether tight and in proper condition.
Poly V-belt tension	check (13–342).
Battery electrolyte density	measure, specification ≥ 1.24 kg/dm³.
Charge indicator lamp	check operation (see table).

Ignition/glow start switch in position	Charge indicator
0	OFF
1	OFF
2	ON

B. Testing regulating voltage, engines 102, 103, 104, 111, 601, 602, 603, 605, 606

Preceding work:
Section A. Preconditions for test

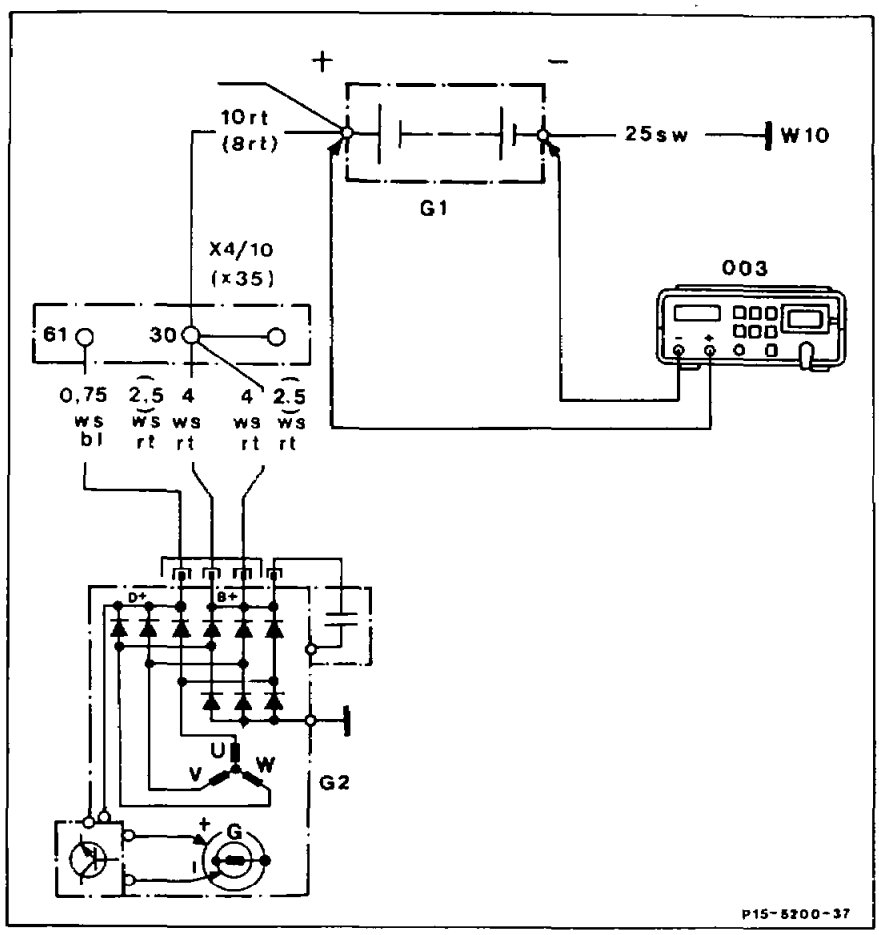

Connection diagram

G1	Battery	X4/10	Terminal block terminal 30/terminal 61 battery (3-pin)
G2	Alternator	003	Multimeter
W10	Battery ground		

Multimeter (003)	connect, disconnect.
Engine	start, stop.
Operation of charge indicator lamp when idling and at increasing engine speed (up to 3000/min)	check. Indicator lamp must go out.
Regulating voltage	check. Run engine at 3000/min. Drain on battery only from positive-operation electrical components (e. g. ignition). Read off regulating voltage after running engine for 2 minutes. **Specification** 13.0 – 14.5 volts.

Regulating voltage > 14.5 volts	1. Replace regulator.
	2. Replace alternator if regulator in order.
Regulating voltage < 13.0 volts	1. Rectify contact resistance at electrical connections of charging system.
	2. Perform diode test as per section F.

C. Testing regulating voltage engine 119.974

Preceding work:
Section A. Preconditions for test

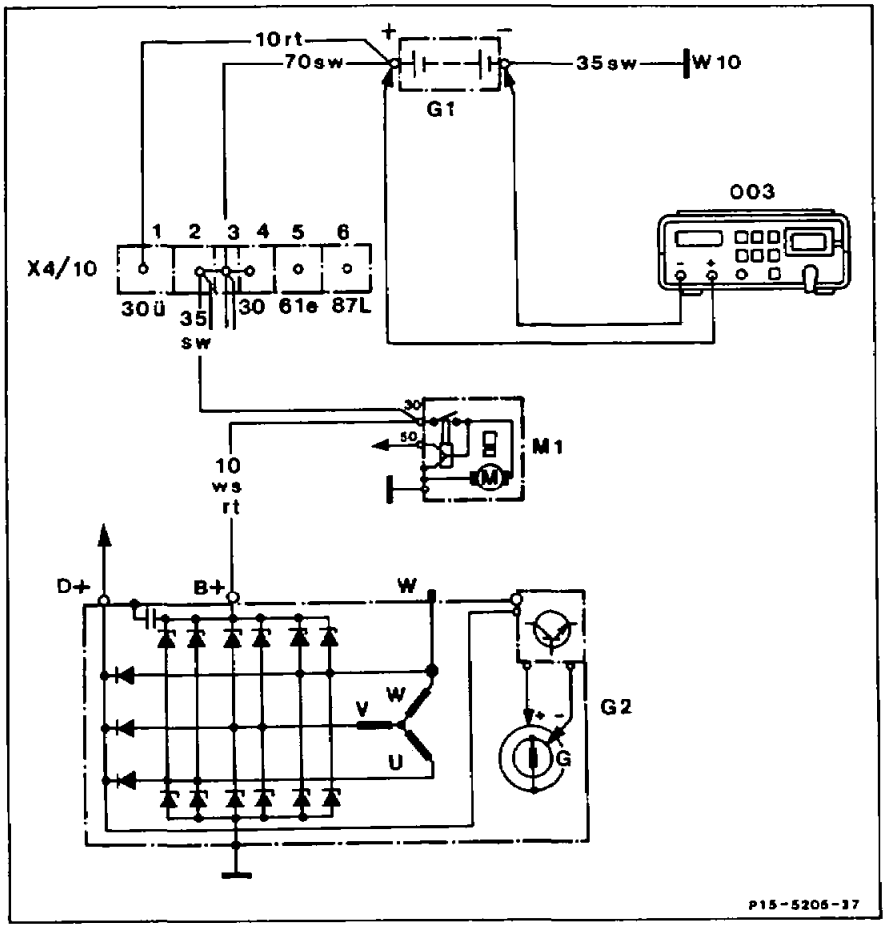

Connection diagram

G1	Battery	X4/10	Terminal block terminal 30/30Ü, 61e/87L (6-pin)
G2	Alternator	003	Multimeter
M1	Starter		
W10	Battery ground		

Multimeter (003)	connect, disconnect.
Engine	start, stop.
Function of charge indicator lamp at idle and increasing engine speed (up to 3000 rpm)	check. Charge indicator lamp should go out.
Regulating voltage	check. Run engine at 3000/min. Drain on battery only from positive-operation electrical components (e. g. ignition). Read off regulating voltage after running engine for 2 minutes. **Specification** 13.0 – 14.5 volts.

Regulating voltage >14.5 volts	1. Replace regulator.
	2. Replace alternator if regulator in order.
Regulating voltage <13.0 volts	1. Rectify contact resistance at electrical connections of charging system.
	2. Perform diode test as per section F.

D. Testing charging current, engines 102, 103, 104, 111, 601, 602, 603, 605, 606

Preceding work:
Section A. Preconditions for test
Section B. Testing regulating voltage

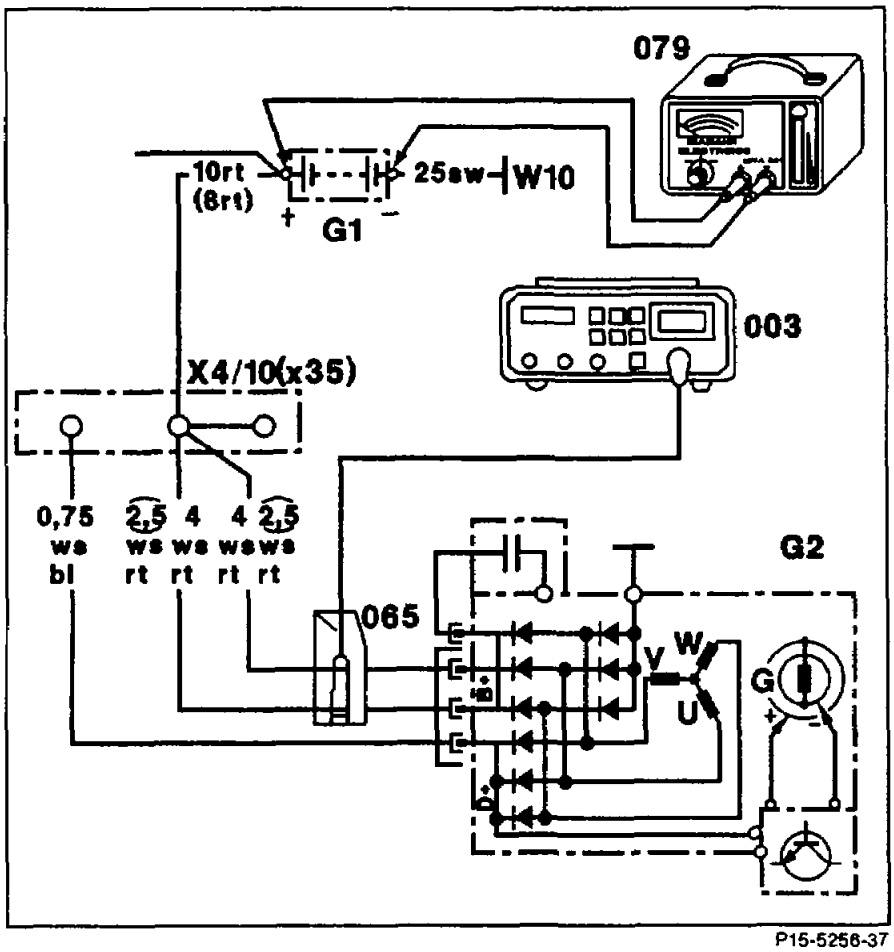

P15-5256-37

Connection diagram

G1	Battery	003	Multimeter
G2	Alternator	065	DC clamp
W10	Battery ground	079	Load resistor
X4/10	Terminal block terminal 30/terminal 61 battery (3-pin)		

Multimeter (003)	connect, disconnect.
Load resistor (079)	connect, disconnect.
Engine	start, stop.
Charging current	test. Run engine up to appropriate speed (see table). Apply drain on battery with load resistor until max. charging current is reached. The regulating voltage must not drop below 12.7 volts when this is done. Specification not reached. Perform diode test as per section F.

Charging current of alternator

Engine	Charging current at 14 volts Amperes	Engine speed (corresponds to alternator speed of 6300/min)	Transmission ratio engine to alternator
102	55	2500	2.54
102 [1])	70	2500	2.54
102 [3])	80	2500	2.53
102.96/102.98 [2])	70	2500	2.54
103	70	2250	2.82
103 [3]) [4])	80	2250	2.82
104.98	80	2500	2.53
104.94/99	90	2200	2.93
104.94/99 [3])	120	2200	2.93
111	70	2200	2.93
111 [1])	90	2200	2.93
111 [3])	120	2400	2.63
601, 602	55	2500	2.54
601, 602 [1])	70	2500	2.54
603.91	55	2200	2.89
603.91 [1])	70	2200	2.89
603.96	70	2200	2.89
603.96 [3])	80	2200	2.89
605, 606	70	2200	2.89
605, 606 [3])	90	2200	2.89

1) With air conditioner/automatic temperature and automatic climate control.
2) Version with catalytic converter as of 08/89.
3) With optional alternator with larger capacity.
4) (AUS), (USA), (J).

Commercially available testers

Multimeter	e. g.	Sun DMM–5 or Fluke, 23
Load resistor	e. g.	Hermann, Elektronic

E. Testing charging current, engines 119.974/975

Preceding work:
Section A. Preconditions for test
Section C. Testing regulating voltage

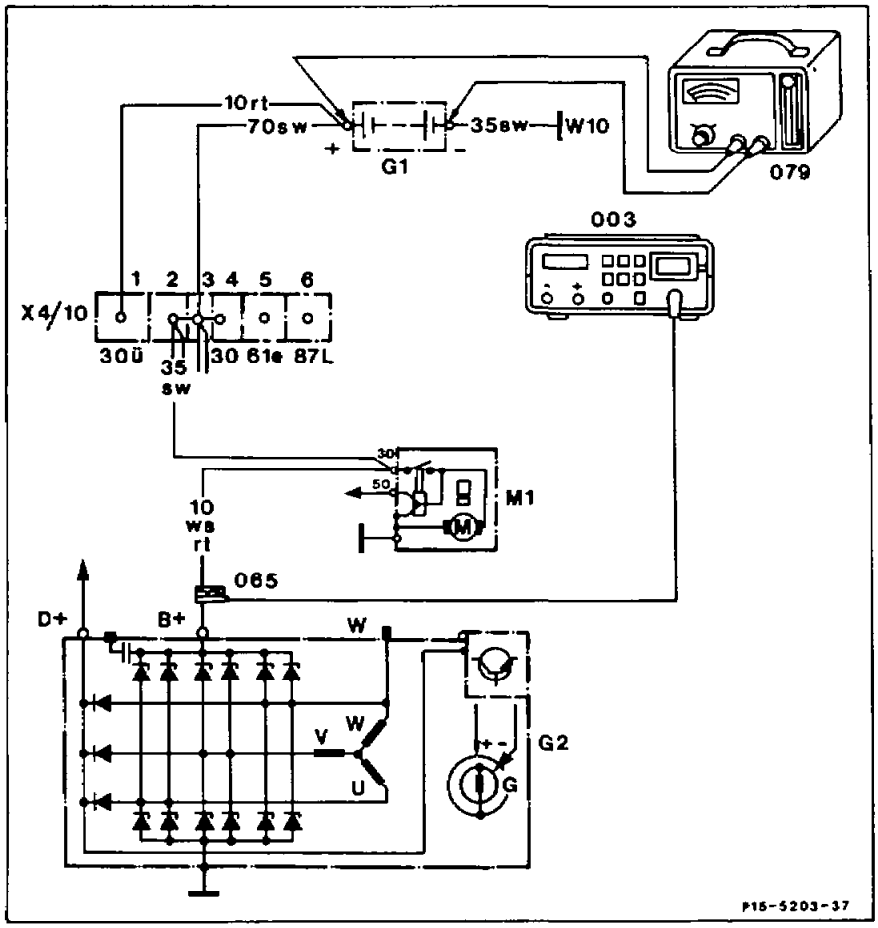

Connection diagram

G1	Battery	003	Multimeter
G2	Alternator	065	DC clamp
W10	Battery ground	079	Load resistor
X4/10	Terminal block, terminal 30/30Ü, 61e/87L (6-pin)		

Multimeter (003)	connect, disconnect.
Load resistor (079)	connect, disconnect.
Engine	start, stop.
Charging current	test. Run engine up to appropriate speed (see table). Apply drain on battery with load resistor until the maximum charging current is reached. The regulating voltage must not drop below 12.7 volts when this is done. Specification not achieved. Perform diode test as per section G.

Charging current of alternator

Engine	Charging current at 14 volts Amperes	Engine speed (corresponds to alternator speed of 6300/min)	Transmission ratio engine to alternator
119 [1])	110	2200	2.91
119 [2])	110	2000	3.2

[1]) With 8-groove belt drive
[2]) With 6-groove belt drive

Commercially available testers

Multimeter	e. g.	*Sun DMM-5 or* Fluke, 23
Load resistor	e. g.	Hermann, Elektronic

F. Testing diodes, engines 102, 103, 104, 111, 601, 602, 603, 605, 606

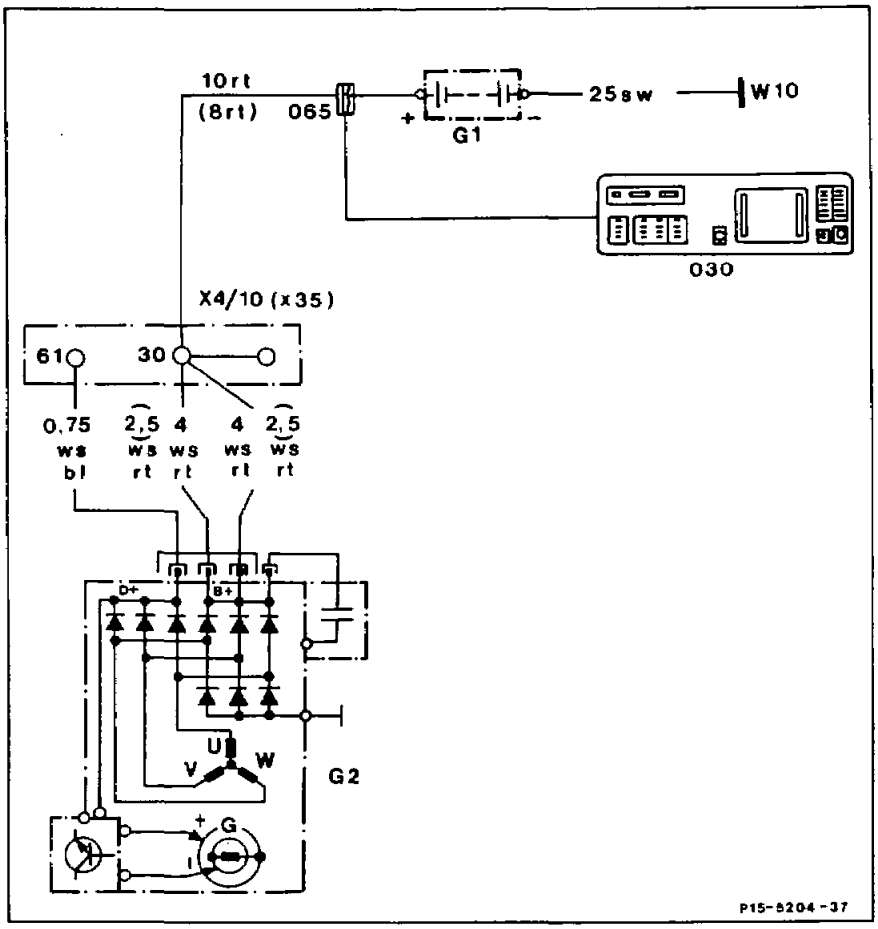

Connection diagram

G1	Battery	X4/10	Terminal block terminal 30/terminal 61 battery (3-pin)
G2	Alternator	030	Engine tester with oscilloscope
W10	Battery ground	065	DC clamp

Note
It is not possible to assess the exciter diode when performing this test.

Engine tester with oscilloscope (030)	connect, disconnect.
Engine	start, stop.
Low beam	switch on, switch off.
Diode harmonics	assess at 3000/min (engine speed) (see section G for diode images).
Diode harmonics in order	replace regulator.
Diode harmonics not in order	replace alternator.

G. Testing diodes, engines 119.974/975

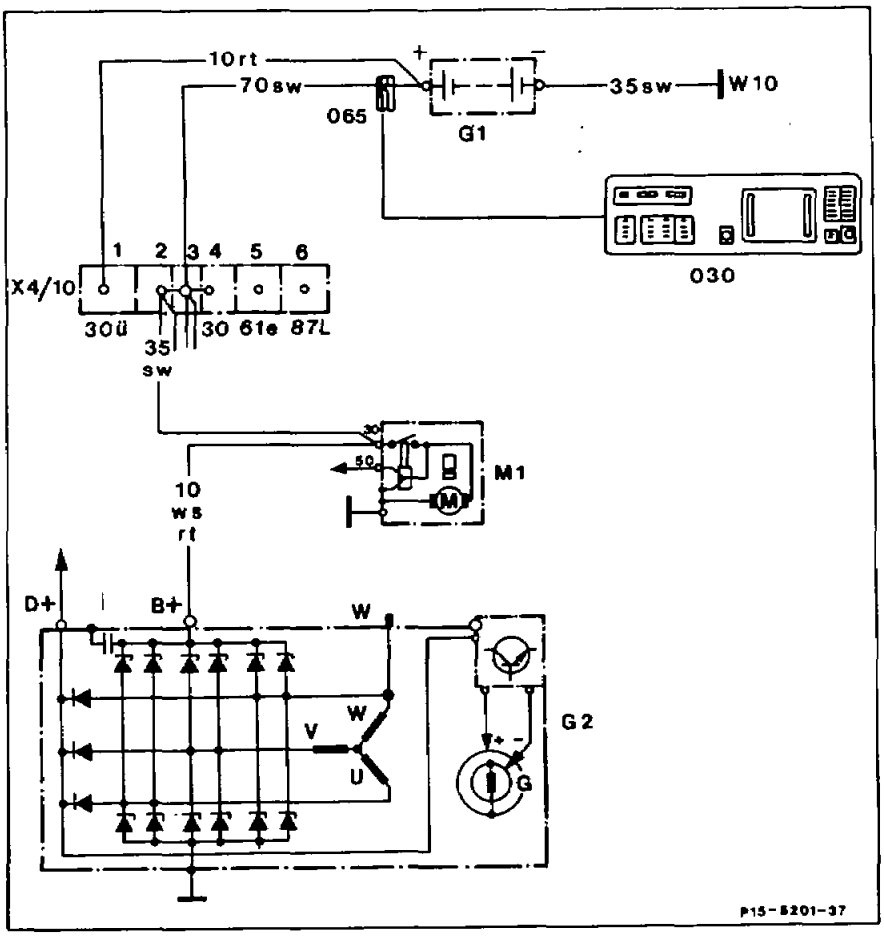

Connection diagram

G1	Battery
G2	Alternator
M1	Starter
W10	Battery ground
X4/10	Terminal block, terminal 30/30Ü/ 61e/87L (6-pin)
030	Engine tester with oscilloscope
065	DC clamp

Note
It is not possible to assess the exciter diode when performing this test.

Engine tester with oscilloscope (030)	connect, disconnect.
Engine	start, stop.
Low beam	switch on, switch off.
Diode harmonics	assess at 3000/min (engine speed).
Diode harmonics in order	replace regulator.
Diode harmonics not in order	replace alternator.

Diode harmonics in order (voltage peaks possible but of no significance) (example)

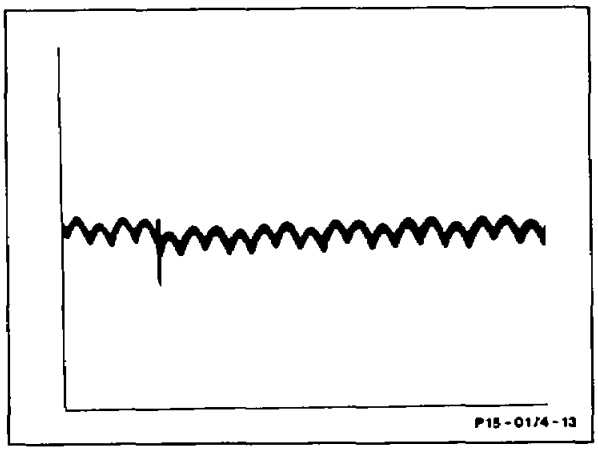

Harmonics if one positive diode is faulty (example)

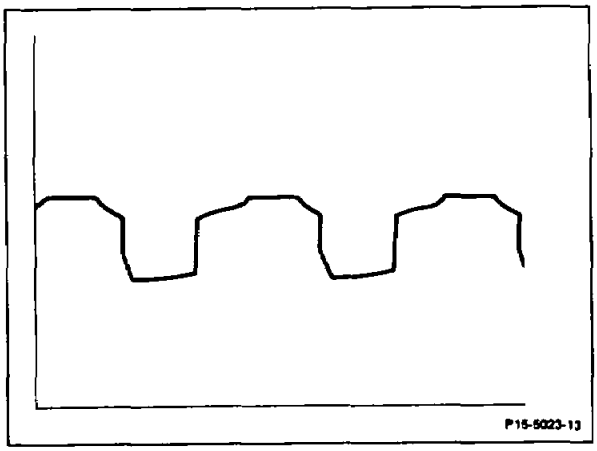

Harmonics if one negative diode is faulty (example)

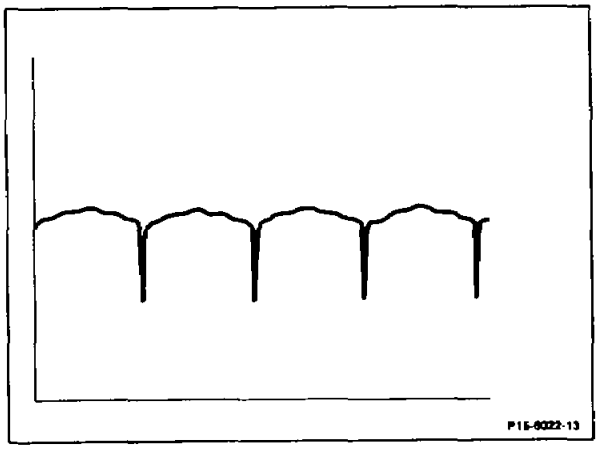

Commercially available tester

Engine tester with oscilloscope	e. g. Hermann, Datascope 980 Bosch, MOT 301/400 Sun, 2110 BEAR, DACE

15–5032 Removing and installing alternator

Preceding work:
Poly V-belt removed (13–342)
Engine compartment panel removed (61–0105), engines 104, 111, 119.974/975
Front noise encapsulation removed (94–5310)

Operation no. of operation texts and work units or standard texts and flat rates:

A. Engines 102, 103, 104, 111, 601, 602, 603, 605, 606

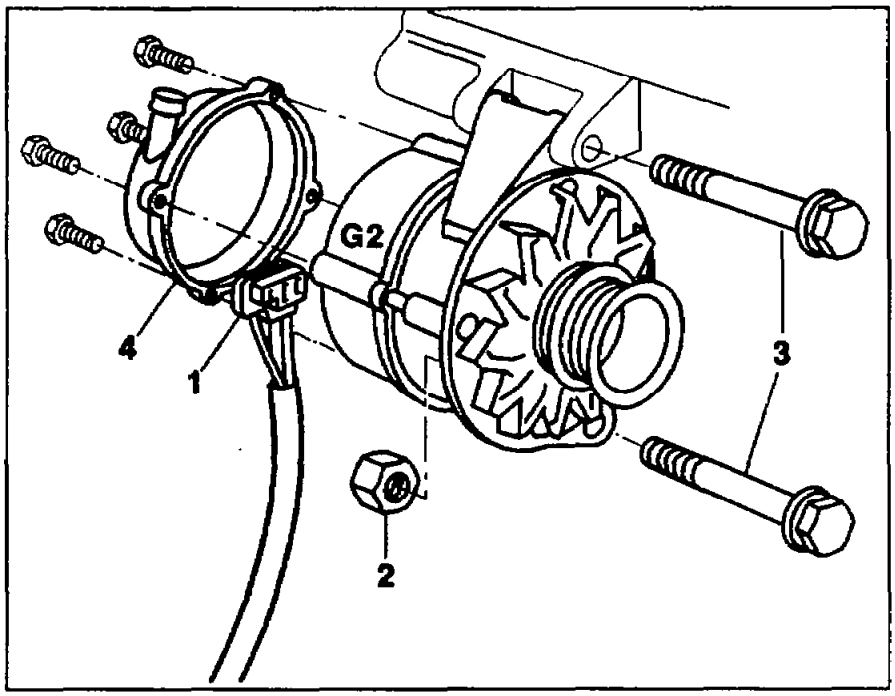

Bowl-type alternator

P15-5257-35

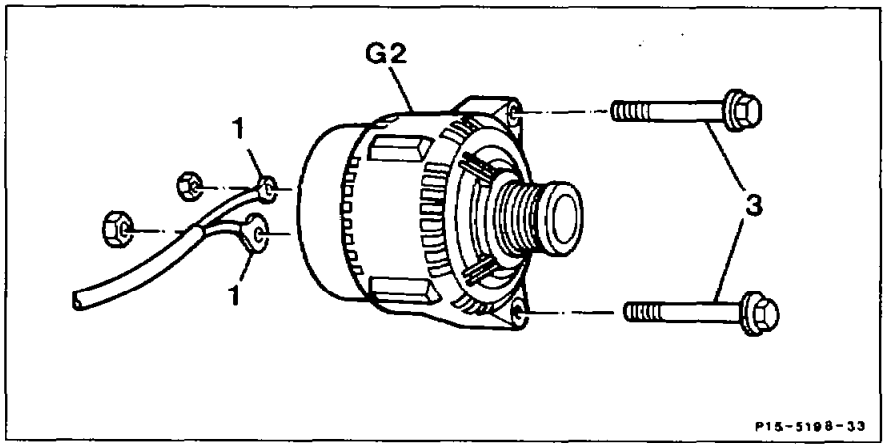

Compact alternator

P15-5198-33

Battery ground cable	disconnect, connect.
Air intake cover (4)	remove, if required, reinstall.
Electrical connection or connections (1) on alternator (G2)	disconnect, reconnect.
Hex. nut (2)	screw off, screw on (if present).
Hex. head bolts (3)	screw out, screw in.
Engines 102, 103	
Alternator (G2)	remove upward, install from above.
Engine 104, 111, 601, 602, 603, 605, 606	
Alternator (G2)	remove downward, install from below.

B. Engines 119.974/975

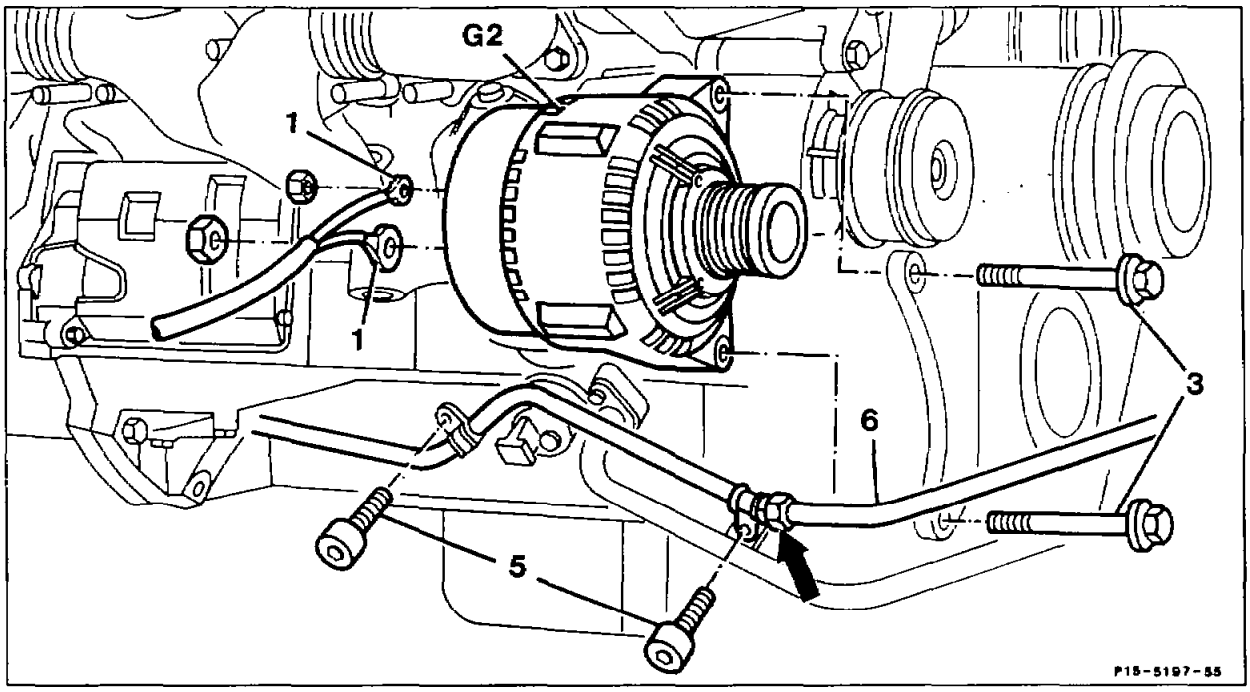

Ground cable at battery	disconnect, connect.
Electrical connections (1)	disconnect, connect.
Hex. head bolts (3)	screw out, screw in.
	⚠ When installing alternator (G2) first start the upper hex. head bolt.
Torsion bar bracket on left and right frame side members	remove, install. Tightening torque 60 Nm.
Engine 119.974	
Bolts (5) for transmission oil line (6)	remove, install.
Transmission oil line (6)	disconnect at threaded fitting (arrow), reconnect.
	⚠ Catch automatic transmission fluid!
All engines	
Alternator (G2)	remove downward, install from below.
Engine 119.974	
After installation check automatic transmission fluid level	See Maintenance Manual, Volume II, operation item (2710).

15–5700 Removing and installing poly V-belt pulley (fan assembly)

Preceding work:
Fan cowl removed, engine 104
Poly V-belt removed (13–342)
Engine compartment panelling removed (61–0105) engines 102, 103
Alternator removed (15–5032) engines 104, 111, 119.974/975, 602, 603, 605, 606
Front noise encapsulation removed (94–5310)

Operation no. of operation texts and work units or standard texts and flat rates:

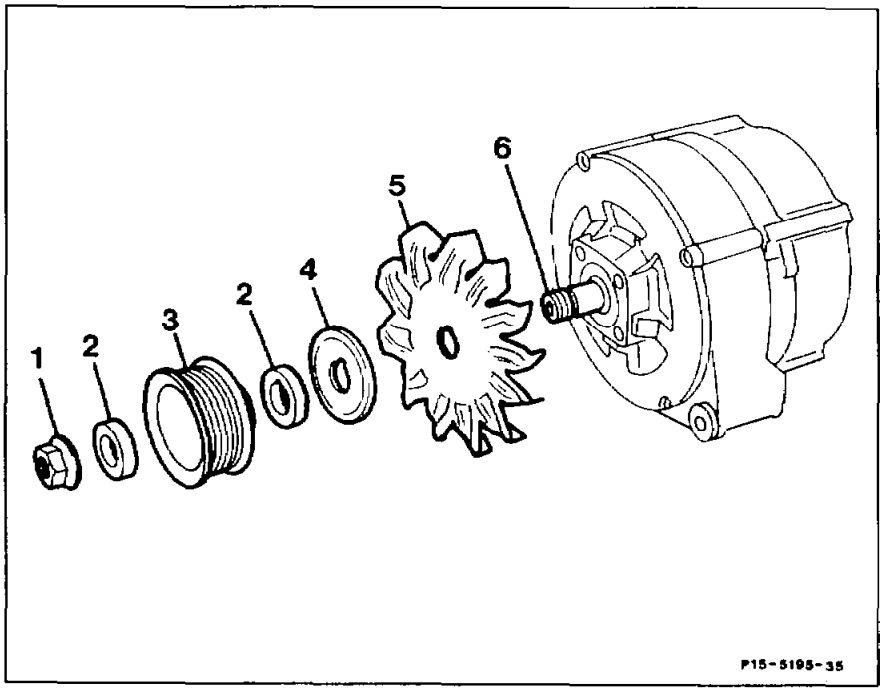

Bowl-type alternator

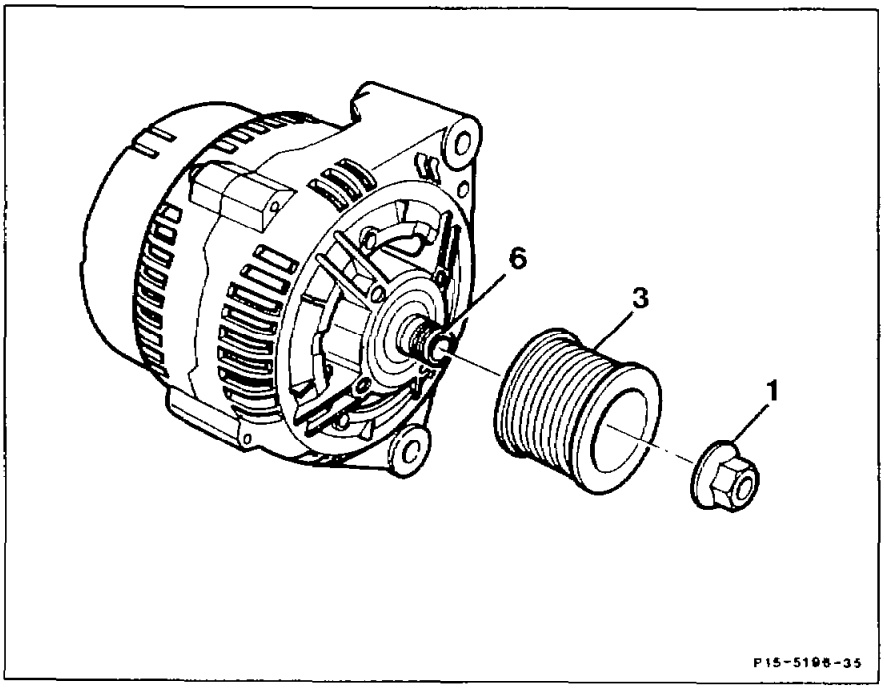

Compact alternator

Ground cable at battery	disconnect, connect.
Collar nut (1)	*unscrew, screw on.* **"Only bowl-type alternator"** Tightening torque 70 Nm. Use hexagon socket bit (8 mm) with reversing ratchet for holding the shaft (6). **"Only compact alternator"** Tightening torque 80 Nm. Use serrated bit (10 mm) with reversing ratchet for holding the shaft (6).
Only bowl-type alternator	
Spacers (2), poly V-belt pulley (3), supporting washer (4), fan wheel (5)	take off, fit on.
Only compact alternator	
Poly V-belt pulley (3)	take off, fit on.

All alternators

Note

The fan wheel is subjected to very different stresses. The level of these stresses depends primarily on the driving conditions. For this reason, when repairing or exchanging alternators on cars which have driven more than 100 000 km, also replace the fan assembly at the same time.

Special tools

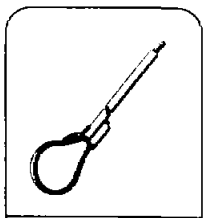

126 589 00 40 00
15

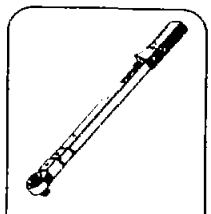

000 589 10 99 01
00

Operation no. of operation texts and work units or standard texts and flat rates:

A. Engines 102, 103, 104, 601, 602, 603 with bowl-type alternator

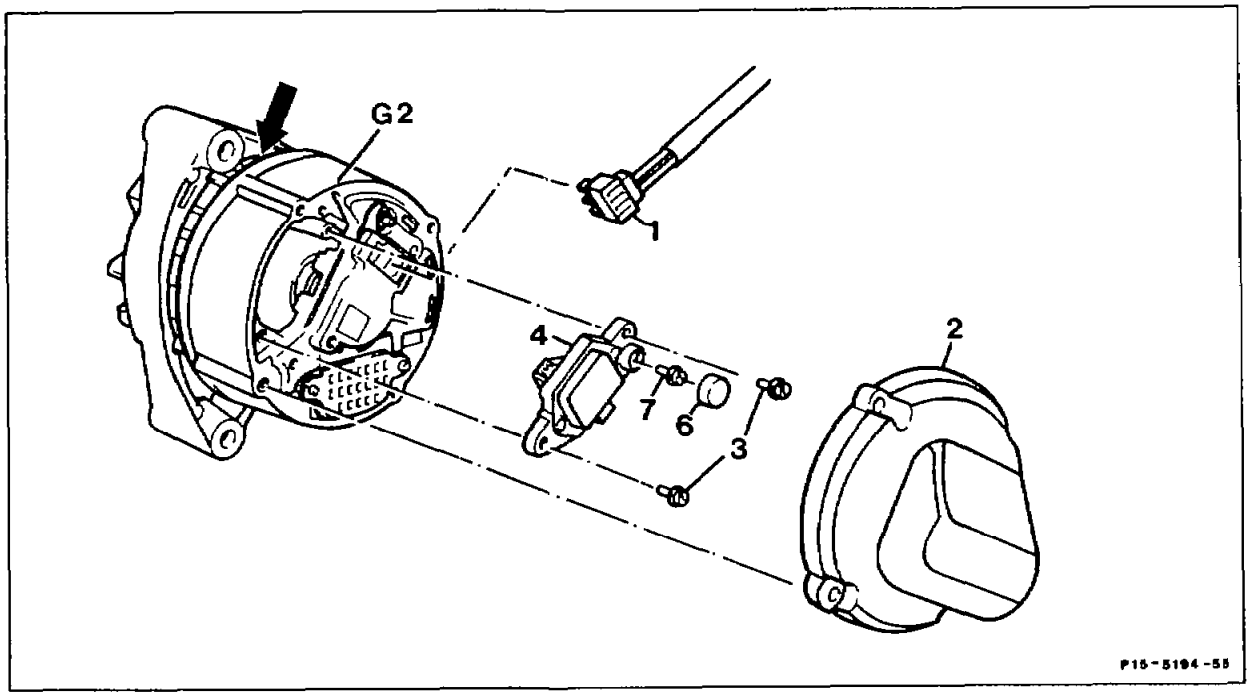

Bowl-type alternator

Note

The alternators of the make Valeo differ from Bosch alternators in terms of the following features:

- Black stator winding (arrow)
- Plastic cap (6) and additional securing screw (7) at the regulator.

Ground cable at battery	disconnect, connect.
Air intake cover (2)	remove, install if need be.
Electrical connection or connections (1) at alternator (G2)	unplug, plug in or disconnect, connect.
Plastic cap (6), screw (7)	remove, install (only Valeo alternator).
Screws (3)	remove, insert.
Regulator (4)	take out to the rear, insert from the rear.

B. Engines 102, 103, 104, 111, 119.974/975, 605, 606 with compact alternator

Preceding work:
Engine compartment panel removed (61-0105) engines 102, 103
Alternator removed (15-5032) engines 104, 111, 119.974/975, 605, 606

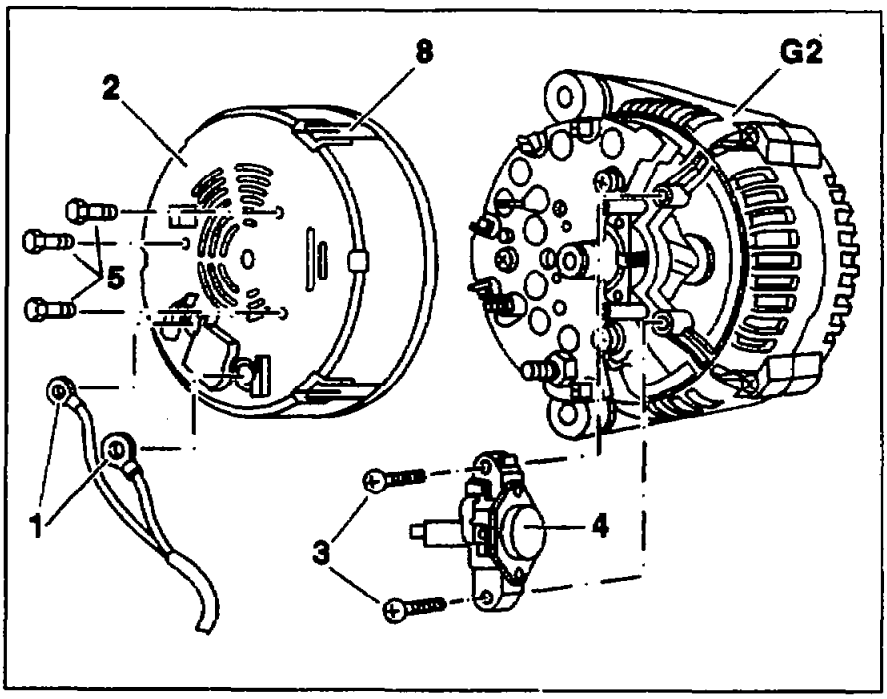

P15-5258-35

Compact alternator

Ground cable at battery	disconnect, connect.
Electrical connections (1) at alternator (G2)	disconnect, connect.
Bolts (5)	unscrew, screw in.
Cover (2)	unclip, clip into place; press catches (8) apart for this purpose.
Screws (3)	screw out, screw in.
	⚠ Pay attention to installation position of regulator (4).
Regulator (4)	remove to side, install from side.

Preceding work:
Engine compartment panel removed (61–0105) engines 102, 103, 104, 111, 119.974/975
Noise encapsulation removed (94–5305)
Air cleaner removed (09–400) engines 601, 602.91, 603.91

Operation no. of operation texts and work units or standard texts and flat rates:

A. Engines 102, 103, 104, 111, 601, 602, 603, 605, 606

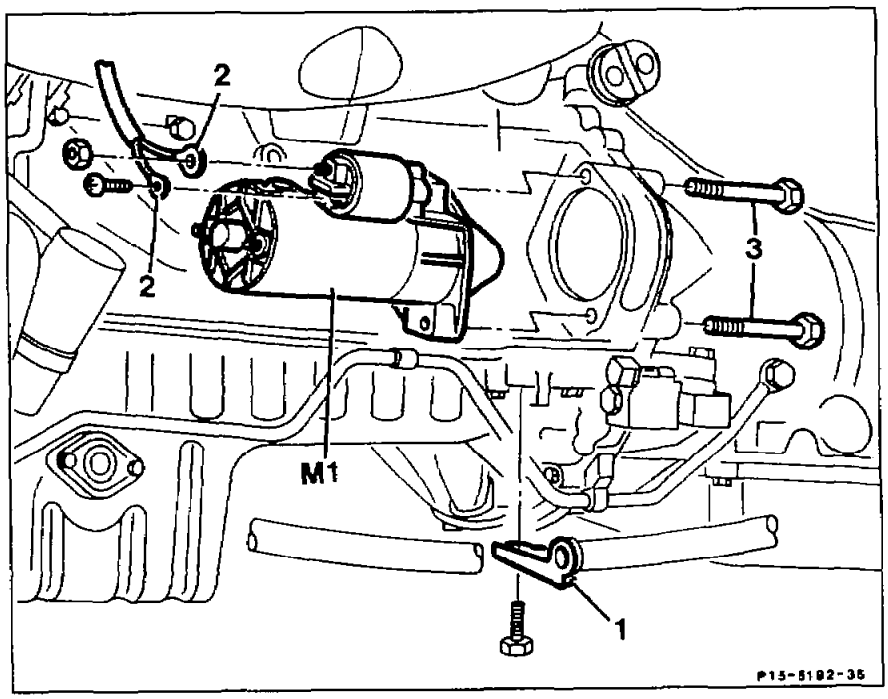

Ground cable at battery	disconnect, connect.
Hose holder (1) with ASD	unscrew, screw on.
Electrical connections (2)	disconnect, connect.
Engine 603.963	remove left drag link on pitman arm, reinstall (46–0550).
Bolts (3)	unscrew, screw in.
Starter (M1)	take out downward, insert from below.

Note
On engines 601, 602, 603 with engine oil cooler, the following additional operations are necessary.

Thermostat for fuel preheater	remove, install.

Bolts of left and right engine mounts (from below)	remove, install.
Engine	raise, lower.
Starter (M1)	take out downward, insert from below.

B. Engines 119.974/975

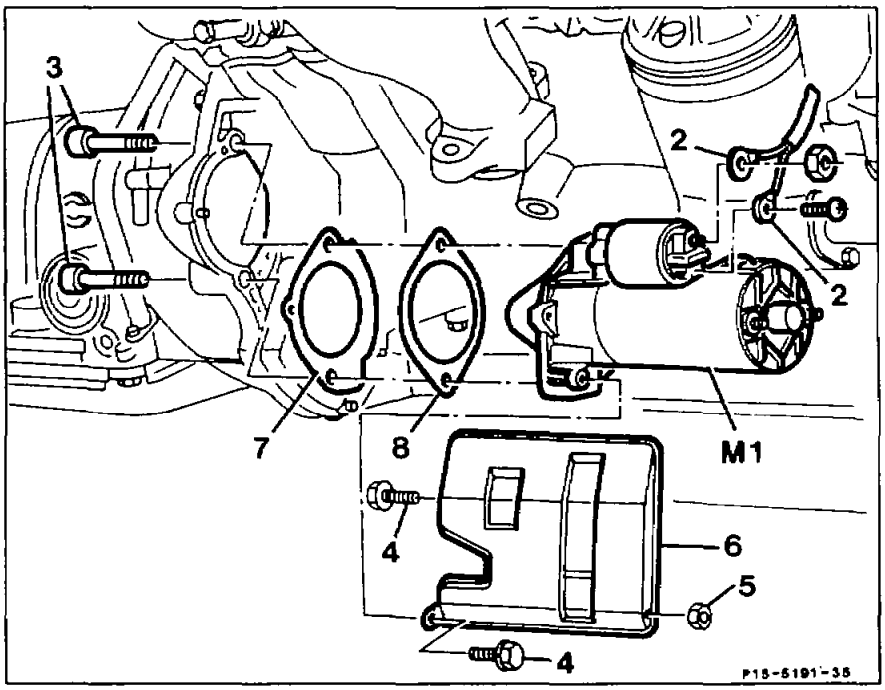

Battery ground cable	disconnect, connect.
Steering	turn to left.
Shield on pitman arm	remove, reinstall.
Bolts (4)	screw out, screw in.
Nut (5)	screw off, screw on.
Shield (6)	remove, install.
Electrical connections (2)	disconnect, reconnect.
Bolts (3)	screw out, screw in.
Starter (M1)	remove downward, install from below, remove and reinstall shim(s) (8) and splash guard (7), if present.

Preceding work:
Removing starter (15-7100)

Operation no. of operation texts and work units or standard texts and flat rates:

A. Replacing hollow gear

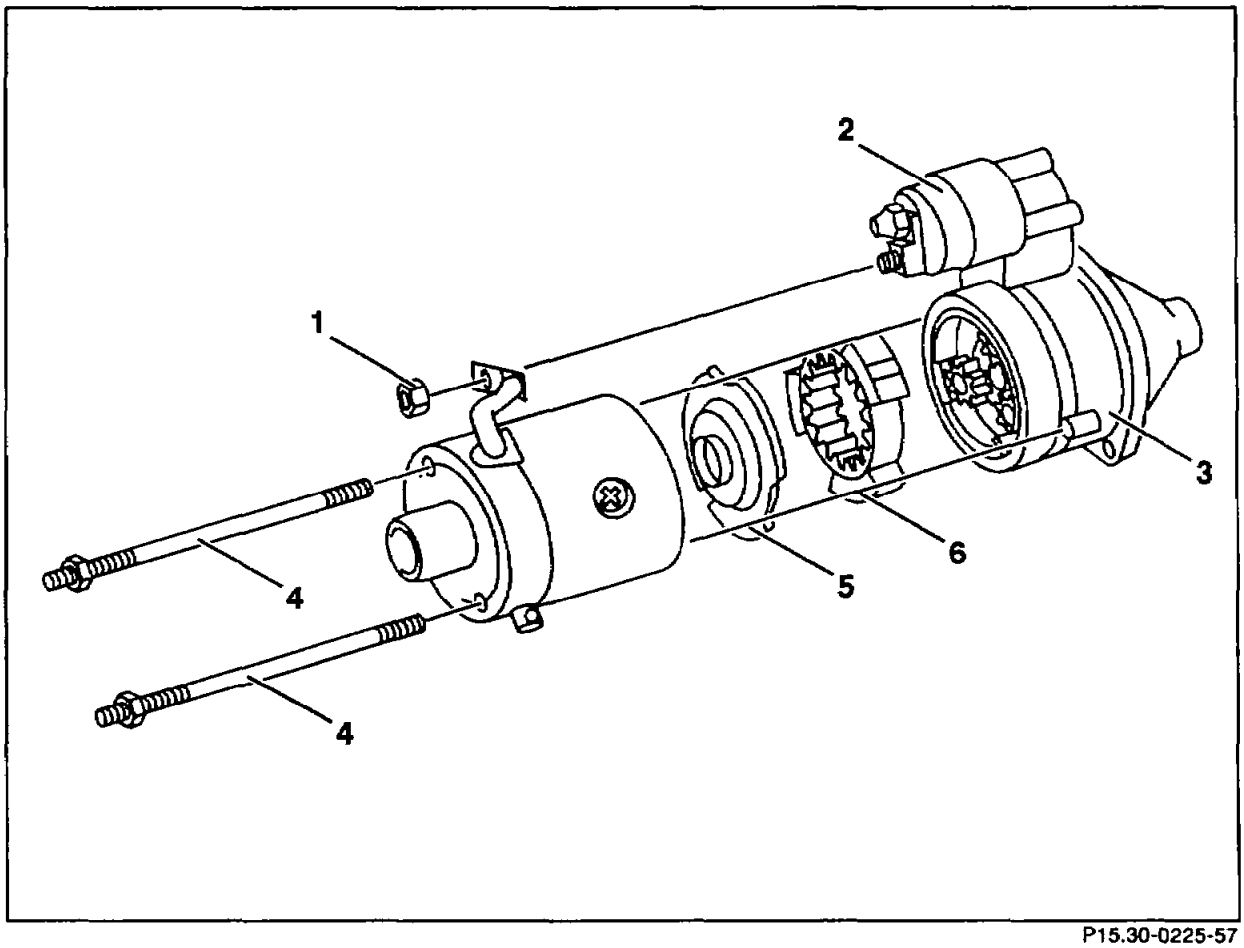

P15.30-0225-57

Connection for exciter winding at solenoid switch (2)	disconnect, connect.
	Unscrew nut (1) at solenoid switch (2), screw on for this step.
Drive gear (3) with planetary gear	take off, fit on.
	Unscrew bolts (4), screw in for this step.
Cover plate (5)	take off, fit on.
Hollow gear (6)	take out, insert.

Note
Coat special grease (included in part supply) into the splines.

B. Replacing planetary gear

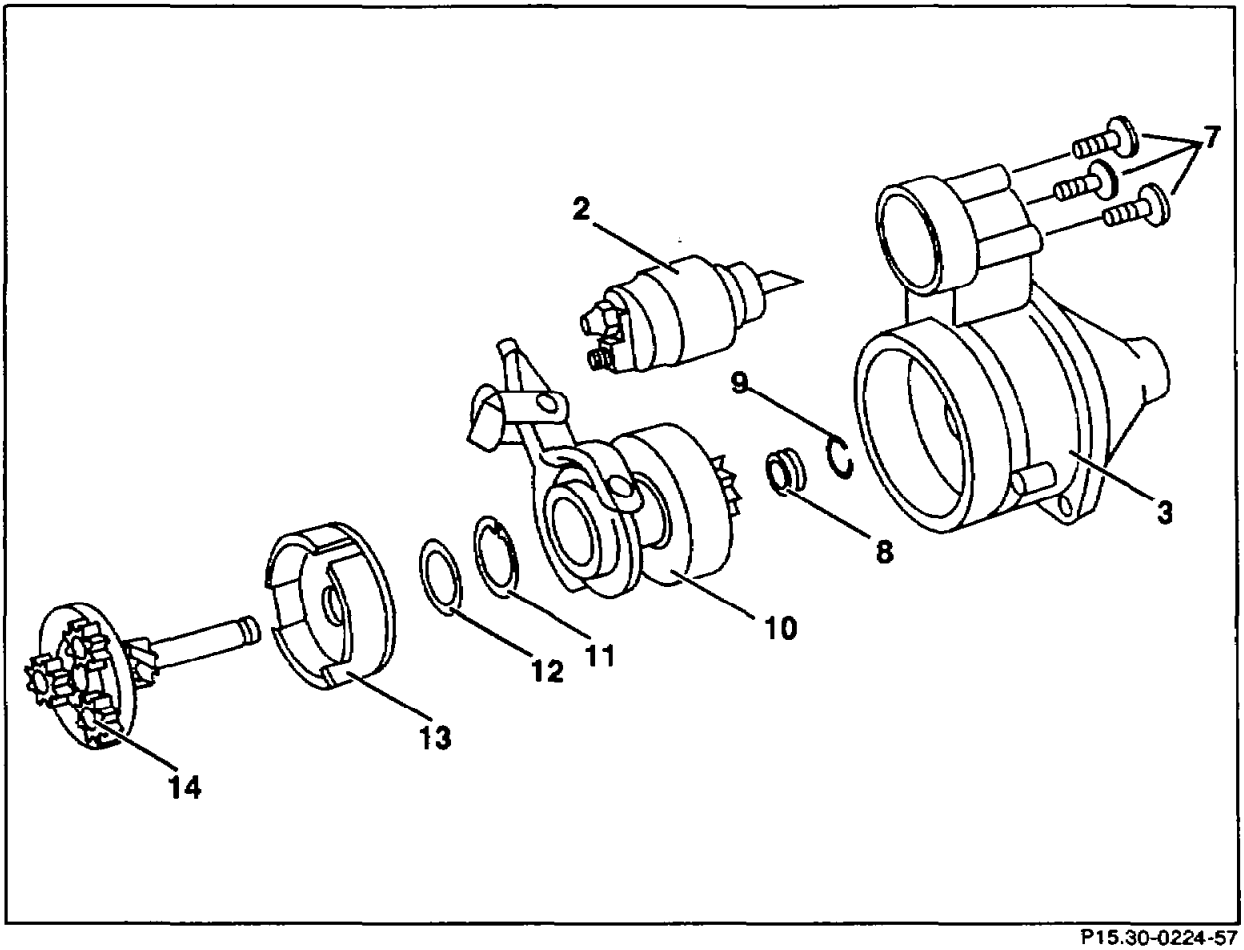

P15.30-0224-57

Planetary gear (14)	inspect.
	Note Non-damaged planetary gear should be cleaned dry (cloth/ compressed air). Do not use any liquid cleaning products. Damaged planetary gears should be replaced complete.
Solenoid switch (2)	remove, install. Remove screws (7), insert for this step.
Planetary gear (14) and starter pinion (10) with engaging lever	pull out of drive bearing housing (3), press in.
Circlip (8)	press off from spring lock washer (9), press on.
	Note Press off circlip (8) toward planetary gear.

Spring lock washer (9)	pull out of groove, insert.
	Note Before the circlip (8) can be pressed onto the spring lock washer (9) when installing, the spring lock washer has to be compressed in the groove with a suitable tool.
Starter pinion (10) with engaging lever	pull off, fit on.
Circlip (11) and washer (12) at housing of planetary gear (13)	take off, fit on.
Planetary gear (14)	remove from housing of planetary gear (13), insert.

15 Engine

Complaint:

Battery boils over or gases severely

Cause:

Short-circuit of exciter diode, regulator has full excitation (may only occur intermittently).

Remedy:

15–5100 Testing generator with regulator in vehicle (section B).

Complaint:

Charge indicator lamp lights up when ignition switched off and engine not running

Cause:

Short-circuit of positive diode(s).

Remedy:

15-5100 Testing generator with regulator in vehicle (sections F or G).

Complaint:

Charge indicator lamp does not light up when ignition switched on

Cause:

Open circuit or contact resistance in pre-excitation current circuit.

Remedy:

1. 15–5100 Testing generator with regulator in vehicle.
2. Test generator charge indicator/warning lamp.

Complaint:

Charge indicator lamp shows constant bright light when engine running

Cause:

Short-circuit of negative or exciter diodes, shorting to ground of stator winding, open circuit of exciter diodes.

Remedy:

15–5100 Testing generator with regulator in vehicle (sections F or G).

Complaint:

Charge indicator lamp glows when idling and becomes brighter when engine speed increases

Cause:

Open circuit of positive diode(s).

Remedy:

15–5100 Testing generator with regulator in vehicle (sections F or G).

Complaint:

Charge indicator lamp lights up when idling and becomes weaker as engine speed increases

Cause:

Open circuit of stator winding or of negative diode(s).

Remedy:

Replace generator.

Complaint:

Regulating voltage is greater than specification (13–14.5 V)

Cause:

Regulator faulty.
Open circuit of exciter diode(s).

Remedy:

15–5100 Testing generator with regulator in vehicle (sections B or C).

Complaint:

Regulating voltage is less than specification (13 V)

Cause:

Fault in charging system (regulator, generator, wiring harness)

Remedy:

15–5100 Testing generator with regulator in vehicle (sections A, B or C).

Complaint:

Charging current (A) is below specification

Cause:

Fault in exciter current circuit, short-circuit or open circuit of diodes or short-circuit of stator winding.

Remedy:

15–5100 Testing generator with regulator in vehicle.

Complaint:

Charging current (A) reaches specification although no load exists

Cause:

Regulator has full excitation.

Remedy:

15–5100 Testing generator with regulator in vehicle (sections B or C).

⚠

It is essential to observe specified generator speeds for testing the charging current.

Complaint:

Generator does not charge, model 124 with engine 103

Cause:

Failure of generator because of salt or dirt deposits on regulator.

Remedy:

Replace regulator. At the same time, remove air intake cover and hose for external air intake so that no more air is inducted from the wheelhouse. External air induction no longer fitted as of 02/86.

Complaint:

"Economy" gauge is sluggish or does not indicate

Cause:

Membrane of vacuum unit on automatic transmission leaking. Oil in vacuum line and in instrument.

Remedy:

Replace instrument. Clean vacuum line. Install vacuum unit with fabric-reinforced membrane (see also Group 27).

Complaint:

Battery discharges after vehicle parked for long periods

Cause:

Cause of fault may be an incorrectly connected or faulty component.

Remedy:

54-1030 Carry out no-load current test

Complaint:

Engine cuts out, electrical system has no voltage

Cause:

Cable at terminal block X4, X4/1 terminal 30 in interior at fuse box loose.

Remedy:

Tighten cable at terminal block X4, X4/1.

Complaint:

When engine running, bulb failure indicator lamp does not go out although no lamps are switched on.

Cause:

1 Up to 03/85 the sockets for the windscreen washer level indicator lamp and the bulb failure indicator lamp were mixed up in isolated cases with the result that the lamp in the wrong display field lights up when the windscreen washer fluid level drops.

Remedy:

1 Exchange sockets for bulb failure and windscreen washer level indicator lamps in instrument cluster and adjust washer fluid to correct level.

Complaint:

Bulb failure indicator lamp does not go out when engine running and lighting switched on although no lamp is faulty.

Cause:

Bulb with incorrect output installed.
Poor contact primarily at:
- lamp monitoring unit connector (widened contacts, cold solder points).
- front turnsignal lamp connectors (widened contact).
- Taillamps (spring pretension at contacts of bulbs).

Remedy:

1 Lamps of the same output must be installed on the left and right.

2 Check contacts at bulbs and at lamp monitoring unit and eliminate any contact resistance; bend in contacts if necessary or replace faulty parts.

Complaint:

Generator wiring harness chafing on frame side member

Cause:

Generator wiring harness not correctly laid at frame side member.

Remedy:

Disconnect wiring harness at terminal block (X4/10); first of all remove battery. Isolate chafing point (renew wiring harness if necessary). Push a corrugated hose approx. 100 mm long, part no. 001 546 11 30 over the chafing point, fix in place and secure with a new cable strap, part no. 114 997 02 90.

Complaint:

Bulb failure indicator lamp lights up when using two-way radio on vehicles with two-way radio or telephone.

Cause:

Two-way radio signal affecting lamp monitoring unit.

Remedy:

Install radio interference-suppressed lamp monitoring unit (part no. 126 542 02 32).

Complaint:

Unsteady needle on fuel gauge, oil pressure gauge and coolant temperature gauge when ignition switched on.

Cause:

Production fault at manufacturer's.

Remedy:

Install new gauge.

Complaint:

Moisture or water in fuse and relay box

Cause:

Leak at the rubber grommets or at the cover of the fuse and relay box.

Remedy:

Remove fuse carrier and dry fuse box; replace any damaged parts.

Drill 6 mm dia. hole as shown in sketch.
Examine all rubber grommets and fuse box cover for leaks, seal if necessary with sealant or new rubber gasket.

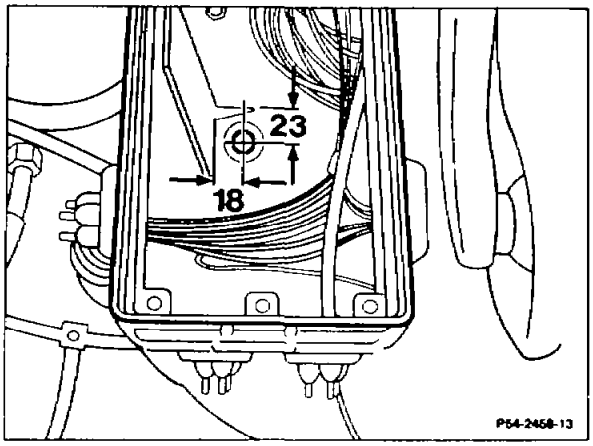

Complaint:

Battery discharges after vehicle parked for short time, model 124.023 with catalytic converter and 124.120 as of 08/85 with air conditioner or automatic climate control

Cause:

Incorrect relay installed for auxiliary fan series resistor (K10); consequently, the electromagnetic clutch of engine fan is constantly engaged even when the key is removed from the steering lock.

Remedy:

Remove changeover contact relay (K10) and install a double-contact relay for auxiliary fan magnetic clutch (K8) with black cover, part no. 001 542 53 19.

Complaint:

Engine cuts out intermittently, runs again or only runs when started and then cuts out

Cause:

TD terminal of tachometer has intermittent short-circuit and fuel pump relay is not activated.

Remedy:

Detach connector from tachometer; if this eliminates fault, replace tachometer.

18–0020 Engine oil and filter change

Preceding work:
Warning instructions when hood open (01-0085).
Air cleaner removed (09–1031).

Operation no. of operation texts and work units or standard texts and flat rates
00–6200

Specified viscosity classes according to SAE at prolonged outside temperatures

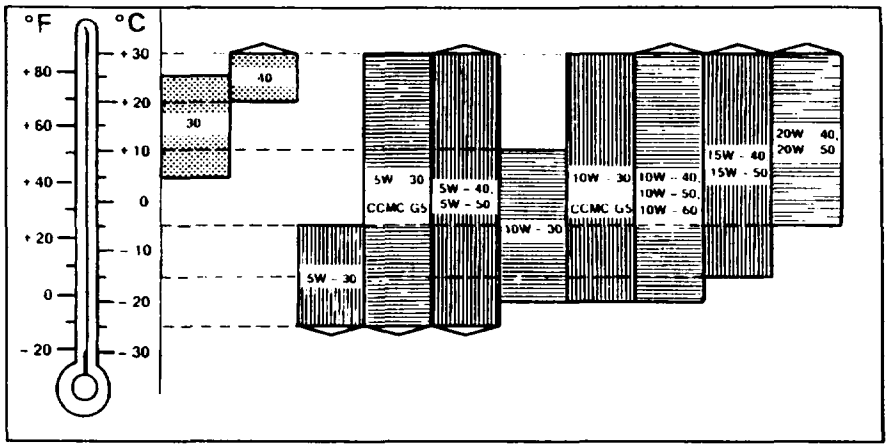

P18-5179-33A

Precise use of the SAE classes according to the outside air temperatures would necessitate frequently changing engine oil. The temperature limits for the SAE classes should therefore be regarded as a guide which may be transgressed for brief periods.

Refer to the "Service Product Specifications" for further information on specified viscosity classes and approved engine oils.

Oil capacity in litres

Engine	Model	Capacity when changing oil and filter	Dipstick marking (see 18-3500)	
			Color marking	Numbering on handle (color red)
103	107, 124, 126, 201	6.0	red	–
103	124 4MATIC	6.5	red	–
103	129	6.5[1)]	–	10308
103	201 AMG	5.52 [2)]	red	–
103.987	462.2	7.0 [3)]	–	–

1) 6.1 liters with dipstick guide tube 1st version (up to 05/1992)
2) Oil level when checking between Min. and Max.
3) 6.5 with sand-cast oil sump

Tightening torques in Nm	
Oil drain plug at oil sump	25
Replaceable cartridge Screw cover	20

Special tools

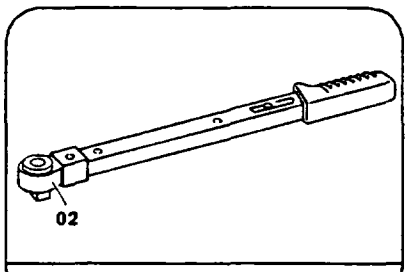

001 589 72 21 00

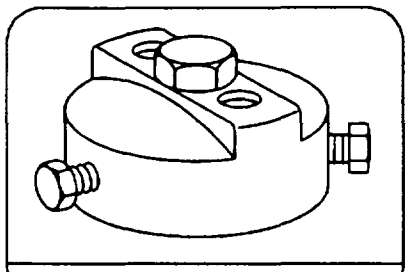

103 589 02 09 00

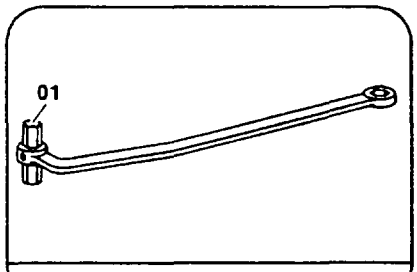

117 589 02 07 00

Commercially available tool

Engine oil extractor	eg.	Deutsche Tecalemit Am Metallwerk 11 D–33659 Bielefeld

⚠

Change engine oil only when engine at normal operating temperature.

1 Before draining or extracting the engine oil, unscrew replaceable cartridge (579) with the wrench socket 103 589 02 09 00. Strike the wrench socket 103 589 02 09 00 lightly to ensure that it is properly located on the interchangeable cartridge (579).

When unscrewing cartridge, a little oil may flow out until the return lock in the cartridge (579) closes.

For this reason, place cleaning rags or similar below the unscrewing surface on the bottom section of the oil filter.

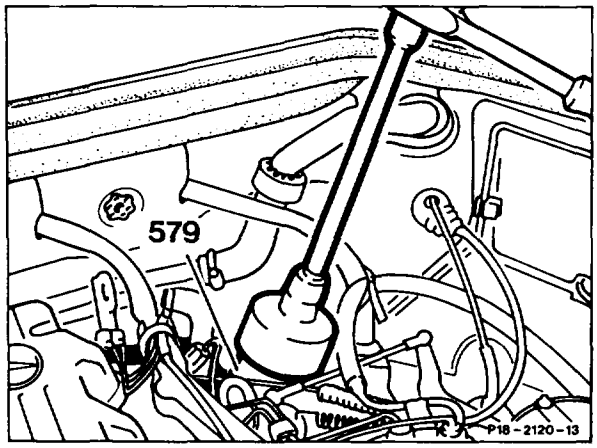

2 Extract engine oil through the dipstick guide tube when engine at normal operating temperature.

If no extractor is available:

3 Drain engine oil from sump (arrow).

Installation instruction
Renew seal of oil drain plug.
Tightening torque 25 Nm.

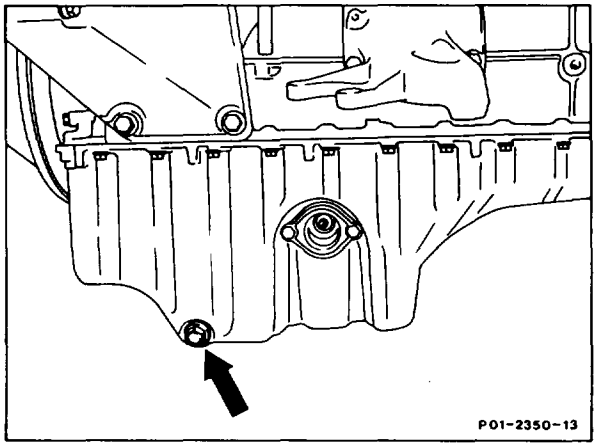

4 On 4MATIC models, unscrew only the drain plug (arrow) at the large oil sump (4).

Installation instruction
Renew seal of oil drain plug.
Tightening torque 25 Nm.

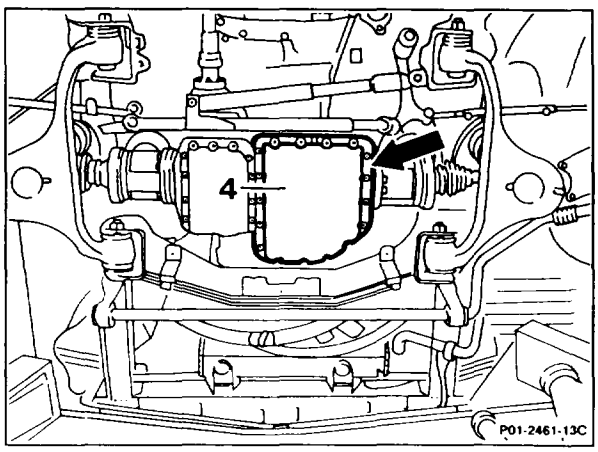

5 Clean connection surface at bottom of oil filter.

6 Apply a light coating of oil to gasket (arrows) of the new replaceable cartridge.

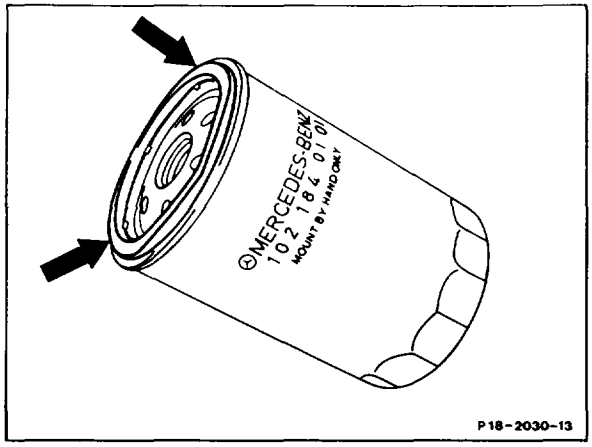

7 Screw on replaceable cartridge (579) and tighten by hand.

Following this, tighten cartridge a further 1/4 turns (90°) with the 74 mm wrench socket 103 589 02 09 00 (approx. 20 Nm).

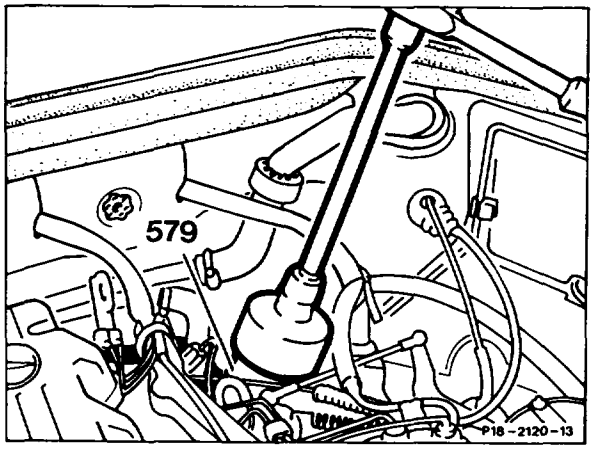

8 Pour in engine oil.

9 Run engine and check for signs of leaks.

10 Wait approx. 2 minutes after switching off the warm engine before checking oil level.

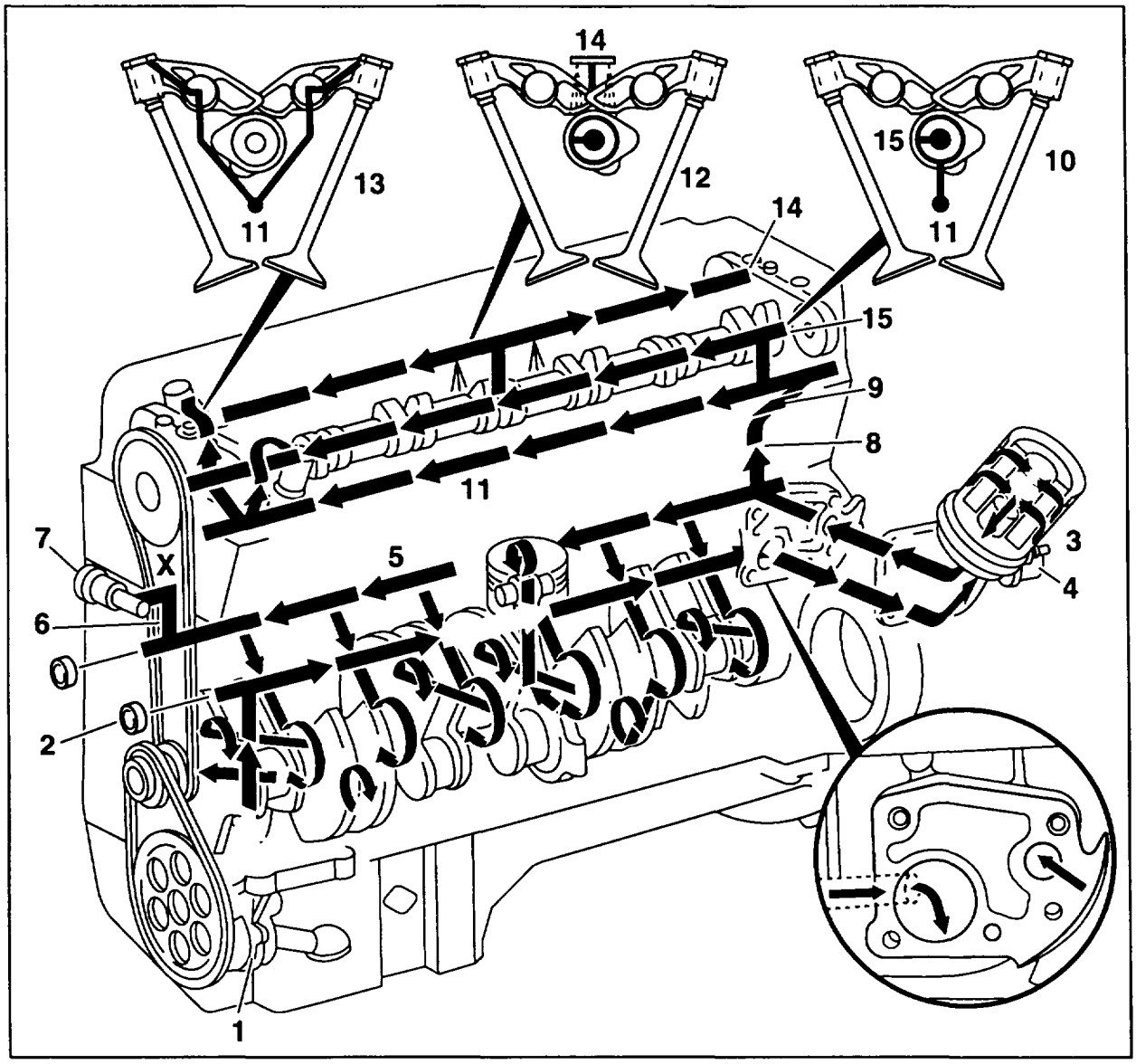

P18-5322-59

1	Oil pump with oil pressure relief valve
2	Oil longitudinal gallery to oil filter
3	Oil filter
4	Electrical oil pressure sensor
5	Main oil gallery **Note** Crankcase 2nd version has an oil transverse gallery at the front like engine 104
6	Oil riser gallery to chain tensioner
7	Chain tensioner
8	Oil riser gallery to cylinder head
9	Oil return lock
10	Oil feed in hollow-drilled camshaft and camshaft bearings
11	Oil longitudinal gallery in cylinder head
12	Oil feed to camshaft lubricating tube at 4th camshaft bearing
13	Oil feed to rocker arms and hydraulic valve clearance compensating elements (12x)
14	Camshaft lubricating tube
15	Oil gallery in hollow-drilled camshaft to camshaft bearings
X	Drilling aid gallery sealed with cylinder head gasket

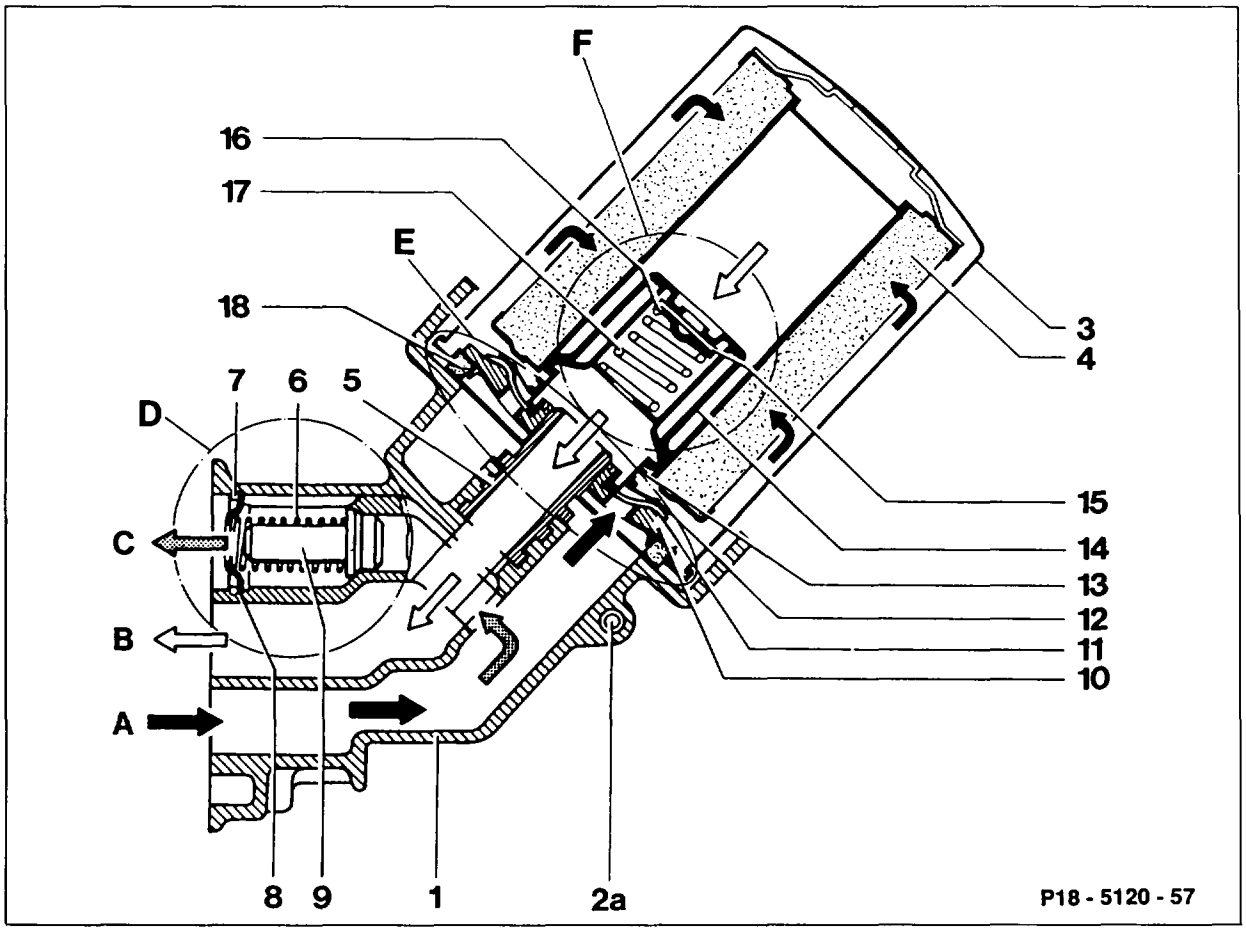

	Oil filter
1	Oil filter bottom part
2a	Oil pressure sensor connection
3	Replaceable cartridge
4	Filter element
5	Connection fitting
D	**Oil filter bypass valve**
6	Compression spring
7	Circlip
8	Spring retainer
9	Valve cone
E	**Outlet lock**
10	Pressure plate
11	Rubber diaphragm
12	Spring plate
13	Compression spring
F	**Non-return valve**
14	Valve holder
15	Valve plate
16	Valve plate carrier
17	Compression spring
18	Gasket
A	Feed from oil pump
B	Filtered oil to main oil gallery
C	Unfiltered oil to main oil gallery

D Oil filter bypass valve

The bypass valve opens once the flow resistance in the replaceable cartridge exceeds 2 + 0.3 bar, and unfiltered engine oil flows into the oil circuit.

E Outlet lock

The spring-tensioned rubber diaphragm (11) in the replaceable cartridge prevents unfiltered oil flowing out of the replaceable cartridge when the engine is switched off or when changing the filter.

F Non-return valve

The non-return valve (16) in the replaceable cartridge prevents clean oil flowing off out of the replaceable cartridge via the bearing points when the engine is switched off.

Oil pressure relief valve
(Opening pressure 5 bar)

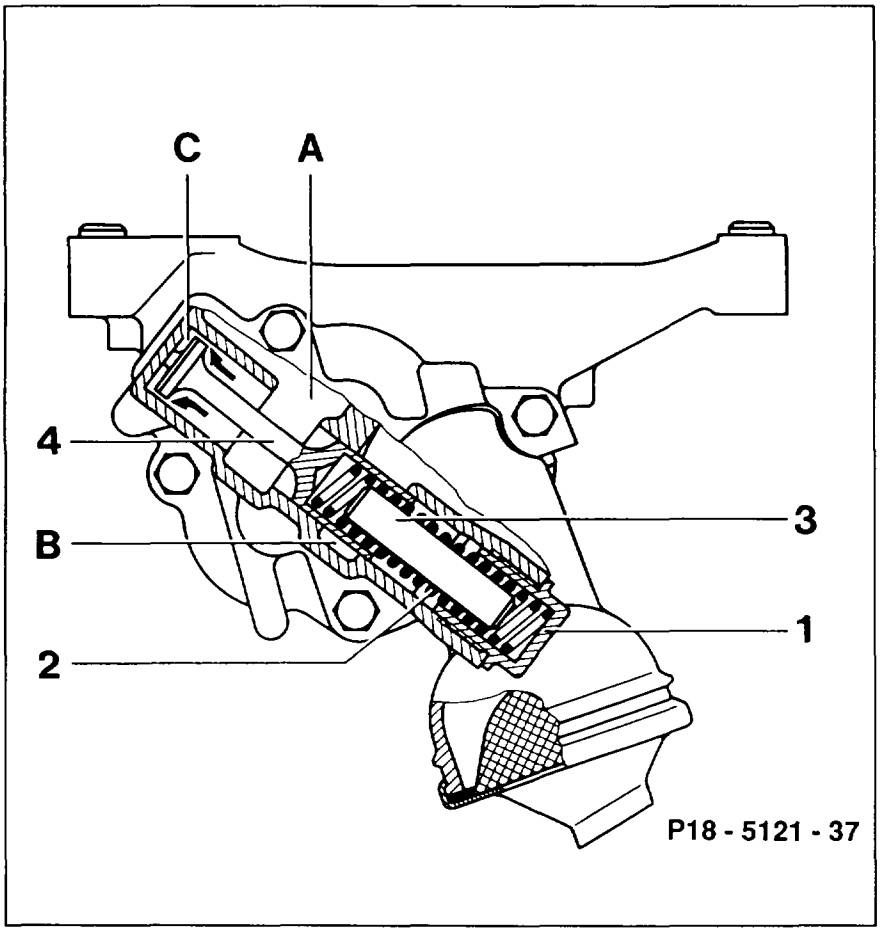

1	Screw plug	A	Pressure chamber (feed)
2	Compression spring (102.9 mm long)	B	Suction chamber (return)
3	Guide pin (45 mm long)	C	Damping chamber
4	Piston		

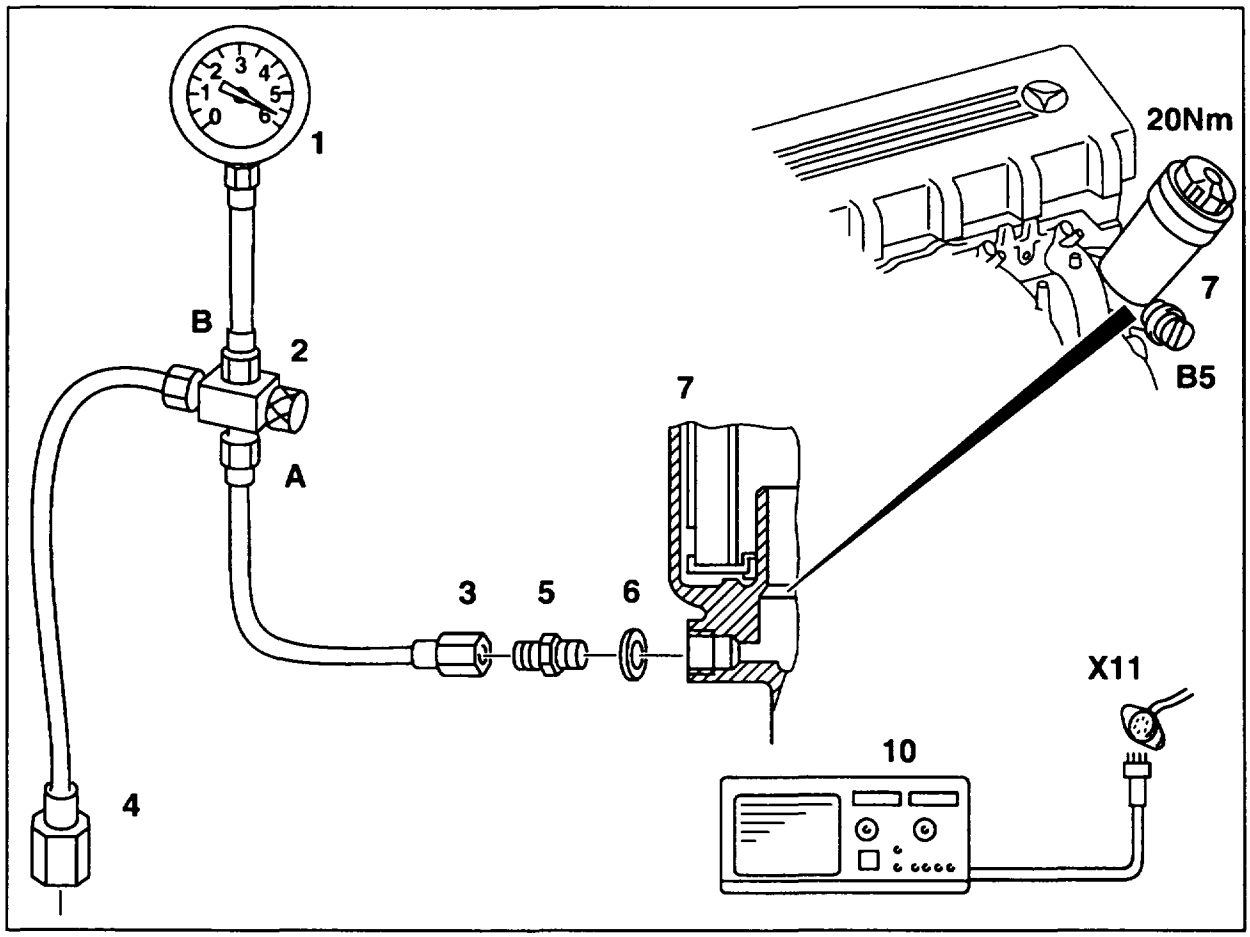

P18-5324-57

1	0 – 10 bar pressure gauge 103 589 00 21 01	6	Seal
2	T valve	B5	Oil pressure sensor
3	Pressure pipe A	7	Oil filter
4	Pressure pipe B	10	Rpm meter
5	M12 x 1.5 pipe fitting	X11	Diagnostic socket

Engine oil temperature	set to 90 °C
Oil level in engine	check, adjust to correct level (18-0020)
Oil pressure sensor (B5)	remove, install
Threaded pipe fitting (5) with seal (6)	screw on in place of oil pressure sensor (B5)
Pressure gauge (1) with pressure pipe (3)	connect

T valve (2) at pressure gauge (1) . . . . . close (turn to closed position)

Oil pressure at stated engine speed . . . . . measure and compare with figures in table

Engine oil pressure (reference values) 2)

Engine speed in rpm	Engine oil pressure in bar at 90 °C engine oil temperature	at 130 °C engine oil temp.
600[1])	0.7	0.6
750	0.9	0.9
1000	2.0	1.3
2000	4.3	3.5
3000	4.6	4.4
4000	4.8	4.6
5000	5.0	4.7

1) With drive position engaged

2) At operating temperature the oil pressure at idle speed must drop to 0.3 bar. When the throttle is depressed, the oil pressure must rise immediately and be at least 3 bar at an engine speed of 3000 rpm.

Special tool

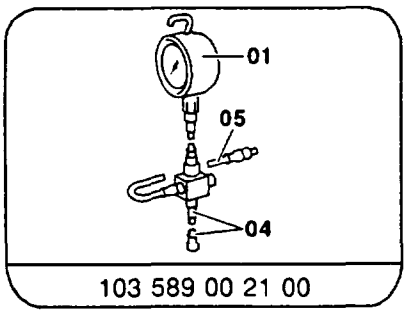

103 589 00 21 00

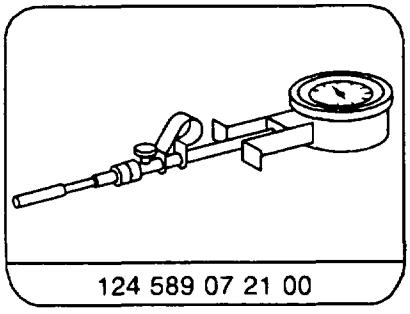

124 589 07 21 00

Commercially available tools

M12×1.5 pipe fitting (5)	915 006 004 002 (DIN)
Rpm meter (10)	eg. engine tester or multimeter

Note re oil pressure relief valve

The damped oil pressure relief valve with 2 flats (arrows) at the piston (4) is integrated in the oil pump and opens at a pressure of 5 bar.

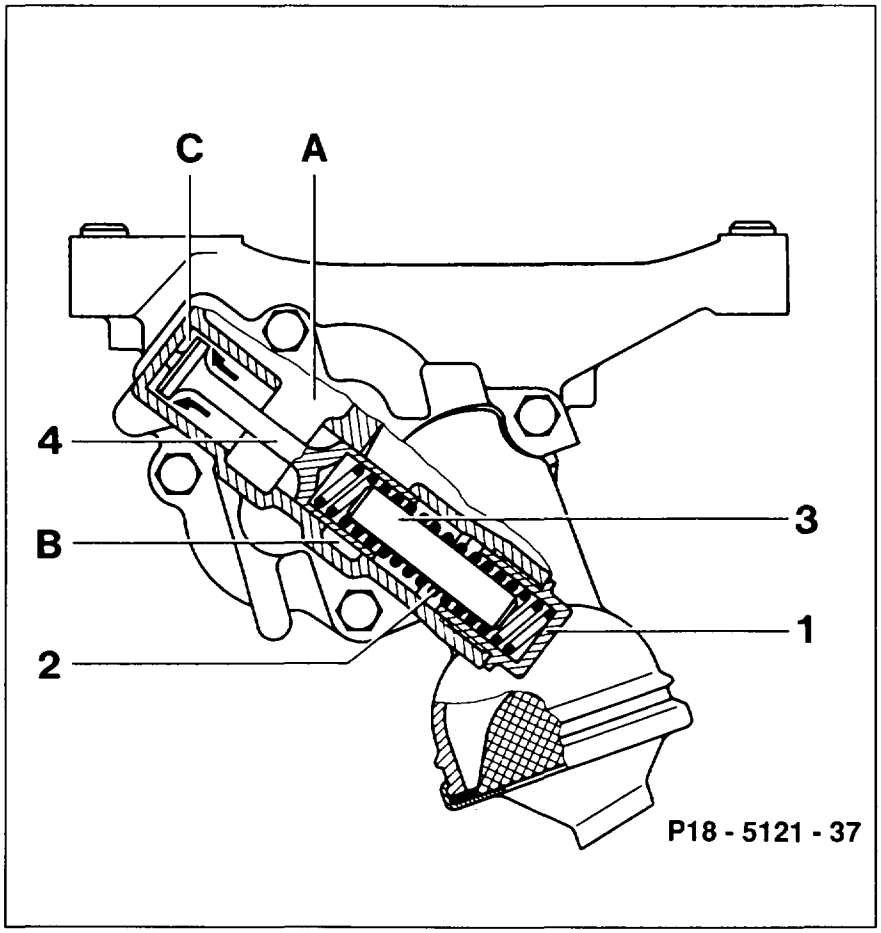

1	Screw plug	A	Pressure chamber (feed)
2	Compression spring (102.9 mm long)	B	Suction chamber (return)
3	Guide pin (45 mm long)	C	Damping chamber
4	Piston with 2 flats		

18–0075 Testing oil pressure sensor

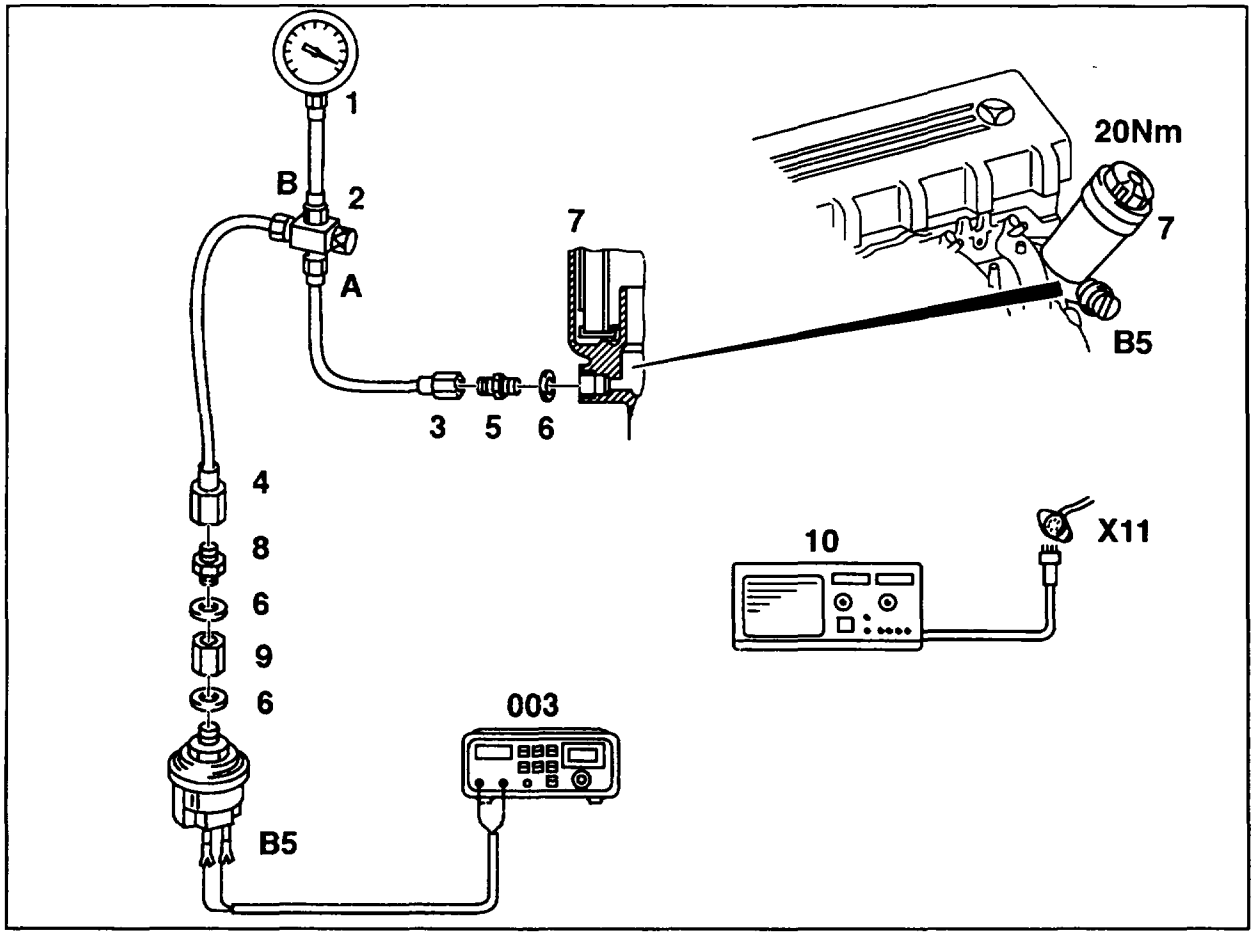

P18-5325-57

Shown on model 129 with 2-pin oil pressure sensor

1	0 – 10 bar pressure gauge 103 589 00 21 01	7	Oil filter
2	T valve	8	M10 × 1 – M12 × 1.5 adapter fitting
3	Pressure pipe A	9	M12 × 1.5 threaded union (shop-made)
4	Pressure pipe B	10	Rpm meter
5	M12 × 1.5 pipe fitting	X11	Diagnostic socket
6	Seal	003	Resistance tester (multimeter)
B5	Oil pressure sensor		

Oil level in engine	check, adjust to correct level (18-0020)
Oil pressure sensor (B5)	remove, install. Replace seal (15 Nm)
Threaded insert (5) with seal (6)	screw on in place of oil pressure sensor (B5)
Pressure gauge (1) with pressure pipe (3)	connect

T valve (2) at pressure gauge (1)	close (turn to closed position)
Oil pressure pressure sensor (B5) to pressure gauge (1)	connect. Use threaded union (9) (see shop-made tool)
T valve (2) at pressure gauge (1)	open (turn to opened position)
Oil pressure sensor (B5) to multimeter (003)	connect
Electrical resistance at stated engine speed	check

Note
Perform measurement with dropping pressure and by knocking unit.
If the resistance of the oil pressure sensor (B5) is not within the stated values, the sensor should be replaced.

Test data of 1-pin oil pressure sensor, models 107, 124, 126, 201

Engine oil pressure in bar	Oil pressure sensor resistance in ohms
0	5–13
0.5	34–45
1.0	63–76
1.5	93–106
2.0	121–138
2.5	148–167
3.0	174–195

Test data of 2-pin oil pressure sensor, model 129

Engine oil pressure in bar	Oil pressure sensor resistance in ohms
0	3–13
0.3	17–34
1.8	102–125
3.0	163–195
3.6	187–236

Special tool

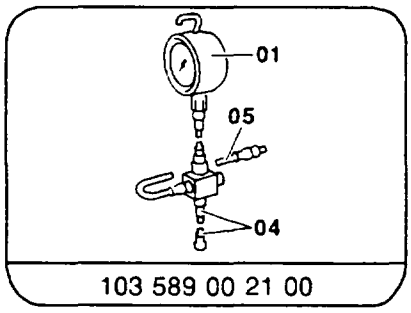

103 589 00 21 00

Commercially available tools

M12 × 1.5 pipe union (5)	915 006 004 002 (DIN)
M10 × 1 – M12 × 1.5 adapter fitting (8)	915 007 004 001 (DIN)
Resistance measuring instrument (003)	eg. DMM-5 Sun multimeter
Rpm meter (10)	eg. engine tester or multimeter

Shop-made tool

M12 × 1.5 threaded union (9) for oil pressure sensor (B5) to pressure gauge (1)

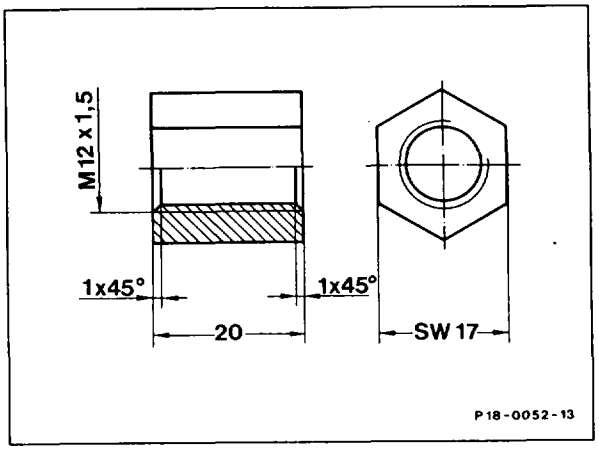

Note

Modification to housing of electric oil pressure sensor at oil filter on models 107, 124, 126

The housing of the oil pressure sensor has been modified in order to assure adequate clearance to speedometer shaft.

Production breakpoint 07/1985

A 1st version
B 2nd version

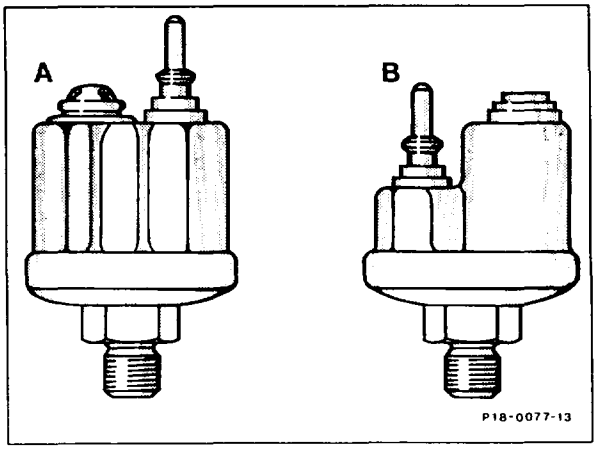

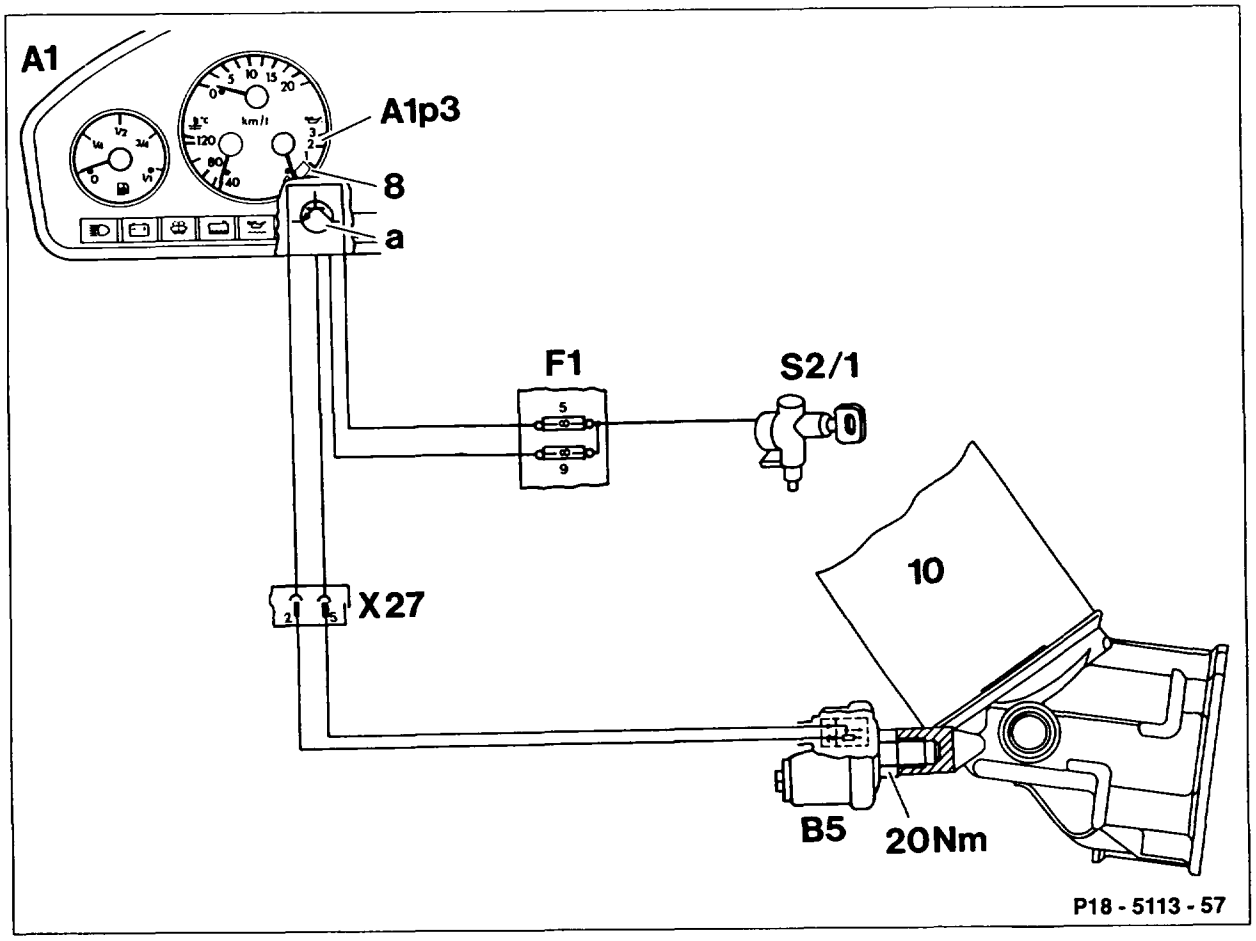

Shown on model 129

Typ 129

The 2-pin oil pressure sensor (B5) in the oil filter (10) converts the existing engine oil pressure into an ohmic resistance. As the oil pressure rises, the ohmic resistance increases. Resistance and engine speed are fed as input signals to the microprocessor (a) in the electrical base plate of the instrument panel (A1).

The microprocessor (a) analyzes the two input signals relative to the stored characteristic curve from an engine speed of > 1200 ± 60 rpm. Depending on the particular analysis, the angle of the oil pressure pointer of the oil pressure gauge (A1p3) is moved across the scale with the values 0, 1, 2 and 3.

If the oil pressure drops at a certain engine speed so that it falls below a certain resistance level, the oil pressure pointer moves to the bottom stop (0) and the warning lamp (8) lights up.
The oil pressure pointer also moves to the bottom stop (0) if there is an open circuit in the wiring, but the warning lamp (8) is not operated.

The oil pressure sensor (B5) is connected via the plug connection (X27) to ground at the base plate and to the microprocessor (a).
The voltage supply of the base plate flows via the ignition lock (S2/1), the fuses (5 and 9) in the fuse box (F1).

Models 124, 126, 201

The one-pin oil pressure sensor (B5) in the oil filter (10) converts the engine oil pressure which exists into an ohmic resistance. As the oil pressure rises, the ohmic resistance increases. The resistance is transmitted as an input signal to the electric base plate of the dash panel unit (A1).

The position of the oil pressure pointer of the oil pressure gauge (A1p3) is controlled across the scale with the readings 0, 1, 2, 3 in accordance with the resistance.

18-0250 Measuring oil consumption

Operation no. of operation texts and work units or standard texts and flat rates
18-1020

Special tools

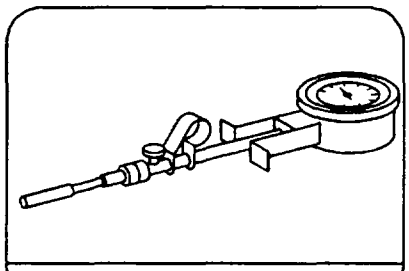

124 589 07 21 00

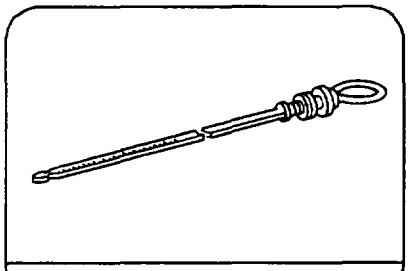

115 589 15 21 00

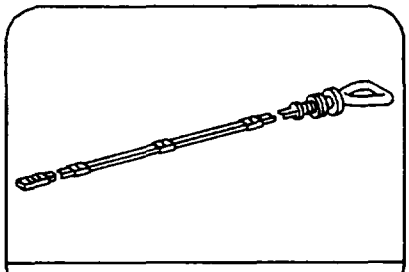

120 589 06 21 00

Oil consumption test sheets [1]

Engine	Print number German/English	Print number French/Spanish
103.942/982	B20 800 98 394 00B	B20 800 98 394 01B
103.940/941/980/ 981/983	B20 800 98 395 00B	B20 800 98 395 01B
103.943/985	B20 800 98 440 00A	B20 800 98 440 01A
103.984	B20 800 98 441 00A	B20 800 98 441 01A

[1] Measure oil consumption on engines not listed here with the weighing method.

Note

The oil consumption should be determined with the dipstick with the millimeter scale and with the relevant test sheet. It should not be greater than 1.0 l/1000 km. The measurement procedure is described on the front of the test sheet and should be strictly adhered to.

⚠

The engine oil should be checked before measuring consumption to detect any fuel dilution and to ensure that the oil is at the correct level in order to avoid incorrect measurements. The oil level must not be higher than stated in table overleaf.

"Max" oil level in mm

Engine	Dipstick	Oil level on dipstick
103.940/941/942/980/981/982/983	115 589 15 21 00	44
103.943/985	120 589 06 21 00	115
103.984	120 589 06 21 00	100

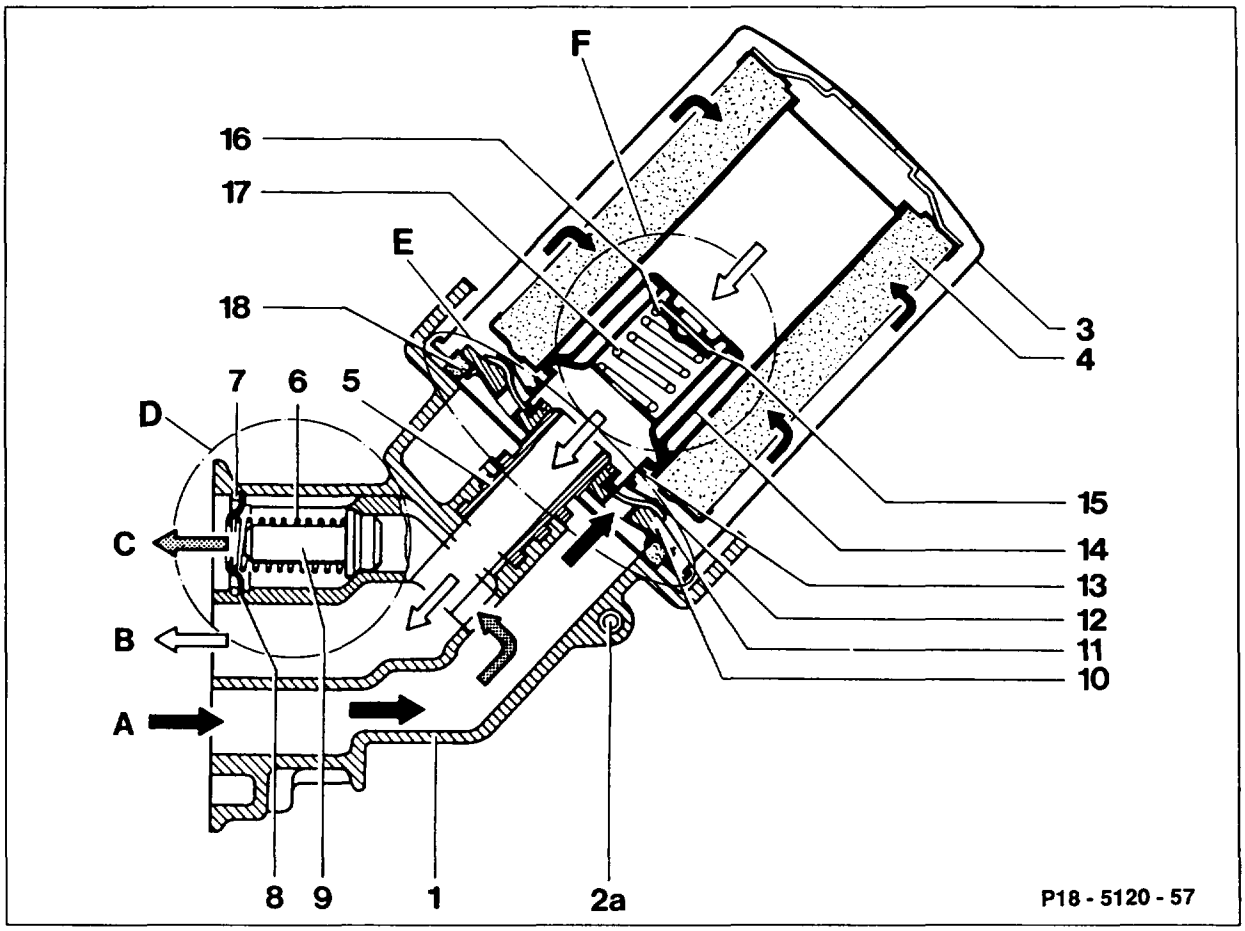

	Oil filter
1	Bottom part of oil filter
2a	Oil pressure sensor connection
3	Replacable cartridge
4	Filter element
5	Connection fitting
D	**Oil filter bypass valve**
6	Compression spring
7	Circlip
8	Spring plate
9	Valve cone
E	**Oil drain lock**
10	Pressure plate
11	Rubber diaphragm
12	Spring plate
13	Compression spring
F	**Return flow shut-off valve**
14	Valve holder
15	Valve plate
16	Valve plate carrier
17	Compression spring
18	Seal
A	Feed from oil pump
B	Filtered oil to main oil gallery
C	Unfiltered oil to main oil gallery

The full-flow oil filter consists of the bottom part (1) and the replacable cartridge (disposable filter) (3). The rubber seal (18) is attached as a captive seal to the replacable cartridge.

D Oil filter bypass valve

The bypass valve opens as soon as the flow resistance in the replacable cartridge rises above 2 + 0.3 bar. Unfiltered engine oil then flows into the oil circuit.

E Oil drain lock

The spring-tensioned rubber diaphragm in the replacable cartridge prevents dirty oil flowing out of the replacable cartridge when the engine is switched off or when replacing the filter.

F Return flow shut-off valve

The return flow shut-off valve (F) in the replacable cartridge prevents clean oil flowing out of the replacable cartridge at the bearing points when the engine is switched off.

18–1100 Removing and installing oil filter

Preceding work:
Air cleaner removed (09–1051).

Operation no. of operation texts and work units or standard texts and flat rates
18–3090 – 18–3800

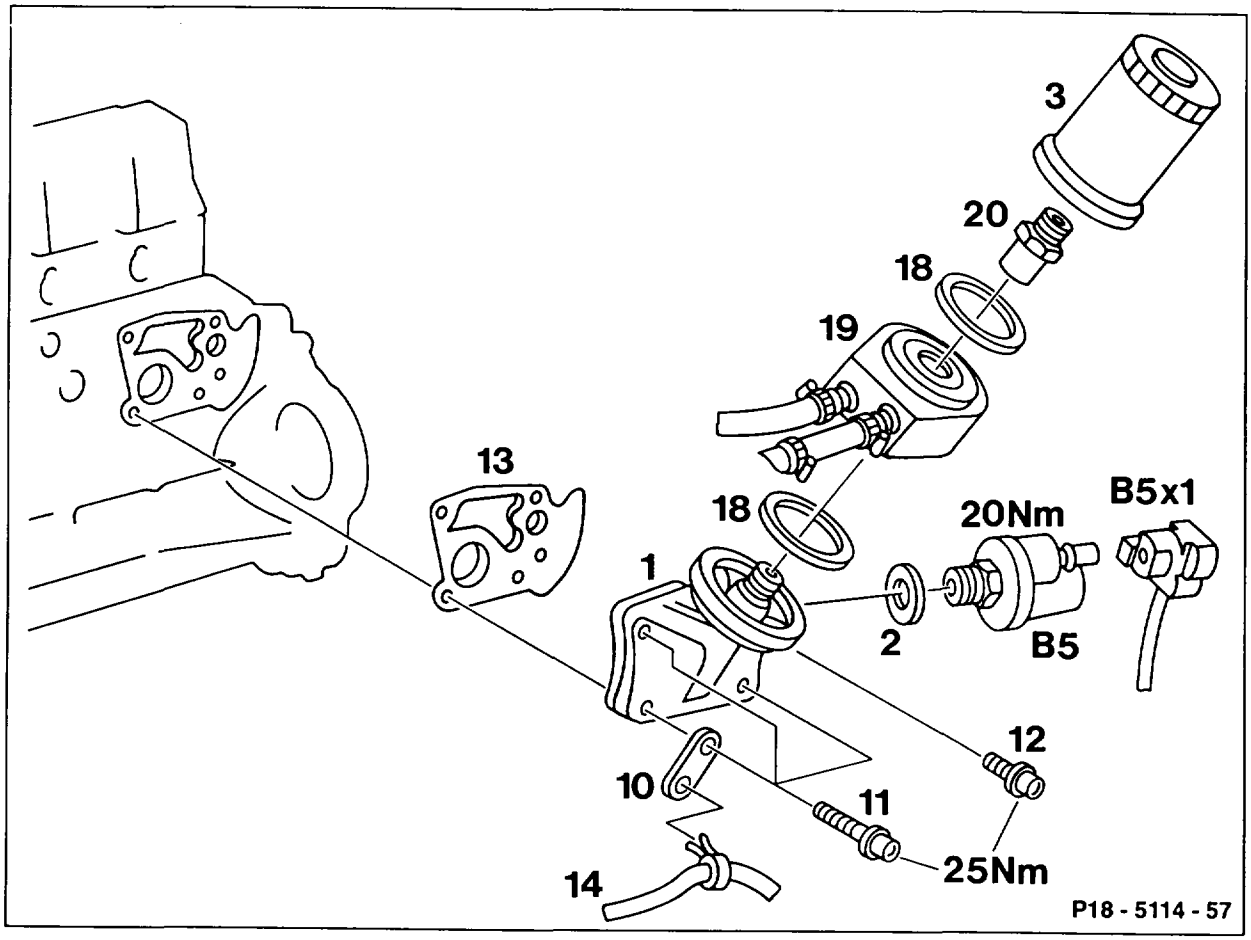

Replaceable cartridge (3)	remove, install (18–0020) with wrench socket 103 589 02 09 00.
Plug connection (B5x1) of oil pressure sensor (B5)	unplug, plug in.
Models 107, 126: oil pressure sensor (B5)	unscrew, screw on (20 Nm).
On engine 103.942/981/982 with automatic transmission: oil-water heat exchanger (19)	remove, install (18–1320).
Cable (14) of crankshaft position sensor at holder (10)	unclip, clip in place.
M8 × 50 screws (11) and M8 × 30 (12)	unscrew, screw on (25 Nm).
Oil filter (1)	remove, install.

Sealing surfaces	clean.
Gasket (13)	replace.
Engine oil level	check, adjust to correct level.
Engine	run, check for leaks.

Tightening torques in Nm	
Oil filter screws	25
Oil pressure sensor to oil filter	20

Special tools

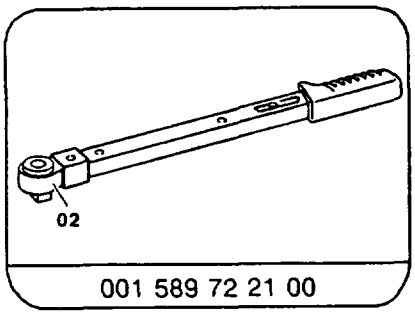

001 589 72 21 00

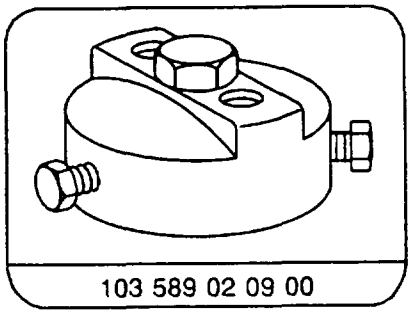

103 589 02 09 00

Modified gasket between oil filter and crankcase

The present version (B) is pierced only in the area of the feed and return which ensures improved leaktightness.

Production breakpoint: 07/1988

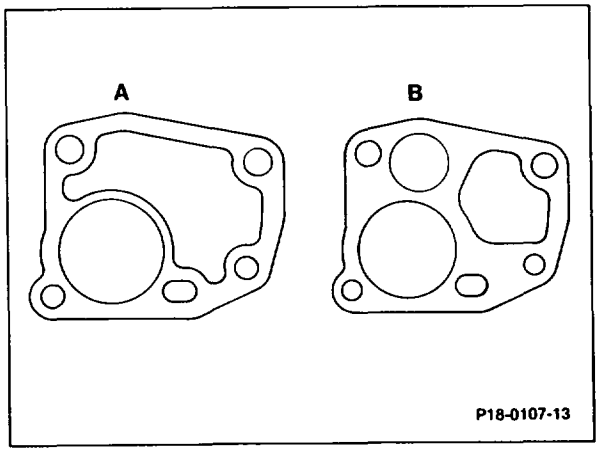

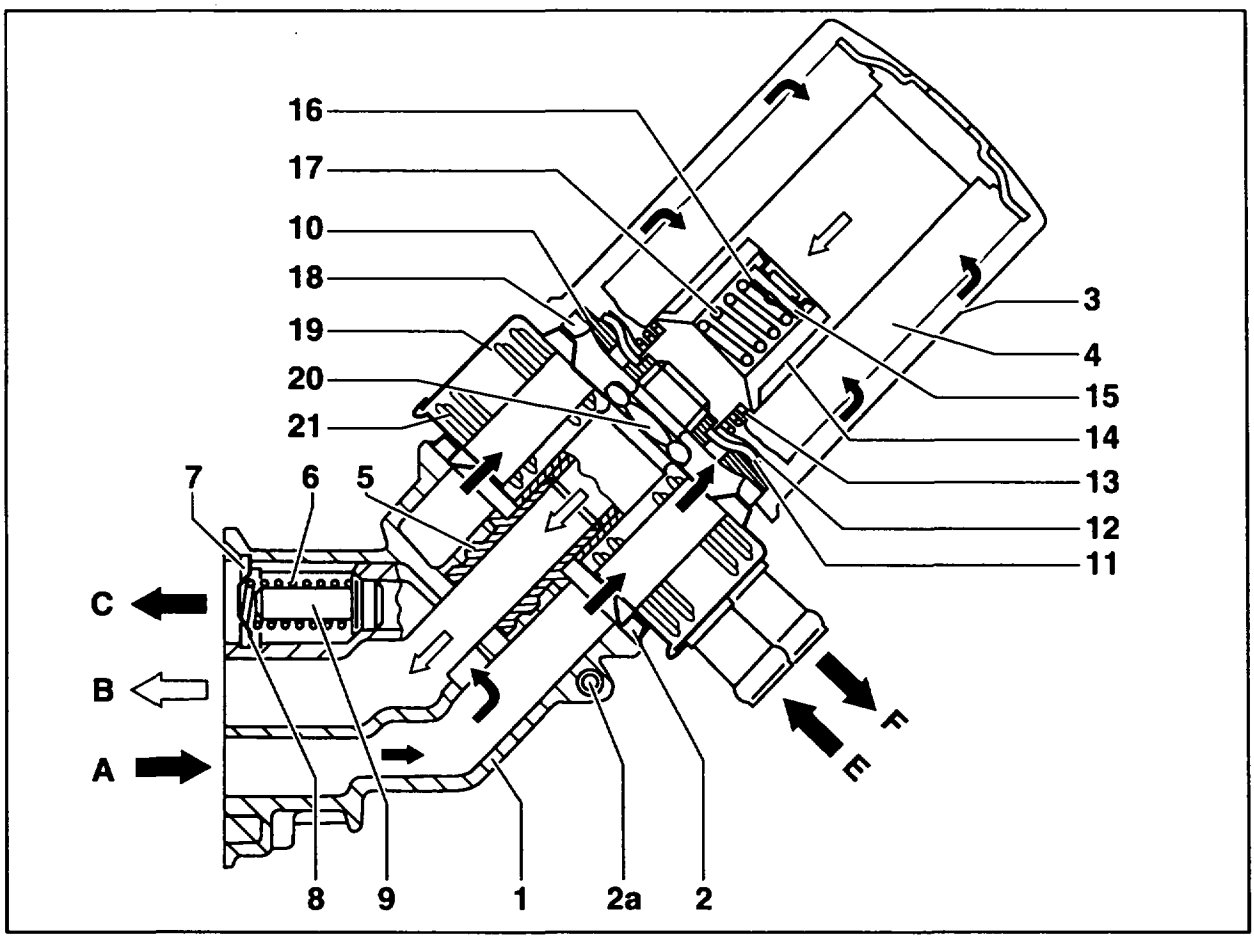

P18-5323-57

	Oil filter		**Return flow shut-off valve**
1	Bottom part of oil filter	14	Valve holder
2	Seal	15	Valve plate
2a	Oil pressure sensor connection (clean side)	16	Valve plate carrier
3	Replacable cartridge	17	Compression spring
4	Filter element	18	Seal
5	Connection fitting		
		19	Oil cooler
	Oil filter bypass valve	20	Central bolt
6	Compression spring	21	Cooling plates
7	Circlip		
8	Spring plate	A	Feed from oil pump
9	Valve cone	B	Filtered oil to main oil gallery
		C	Unfiltered oil to main oil gallery
	Oil drain lock	E	Coolant from crankcase
10	Pressure plate	F	Coolant to coolant pump
11	Rubber diaphragm		
12	Spring plate		
13	Compression spring		

Operation

The engine oil-to-coolant heat exchanger cools the engine oil by about 7 – 10° Celsius. The heat exchanger is positioned between the bottom part of the oil filter (1) and the replacable cartridge (3) and is connected to the coolant circuit. The coolant flows from the crankcase (E), and returns (F) along the return flow pipe to the coolant pump. The unfiltered engine oil flows from the bottom part of the oil filter (1) through the oil cooler (19) to the replacable cartridge (3) and through the central bolt (20) to the main oil gallery (B).

Depending on the temperature of the engine oil, a varying partial quantity of oil flows through the cooling plates (21) which are surrounded by coolant. The other partial oil quantity flows to the replacable cartridge (3) without being cooled.

18–1320 Removing and installing oil-to-coolant heat exchanger

Preceding work:
Air cleaner removed (09–1051).
Model 126: starter removed (15-700).

Operation no. of operation texts and work units or standard texts and flat rates

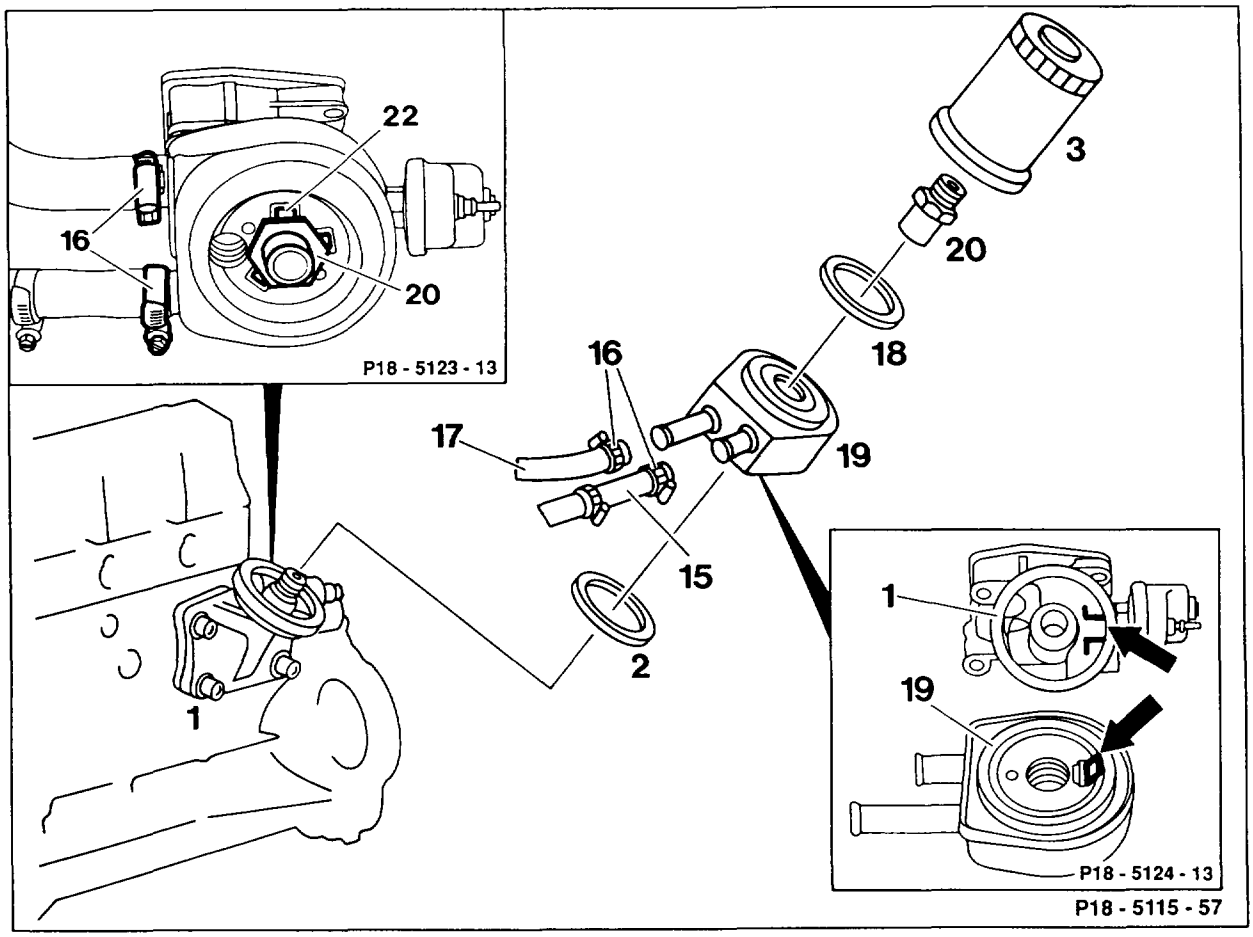

Coolant at crankcase	drain, pour in (20–0100).
Replaceable cartridge (3)	remove, install (18–0020) with wrench socket 103 589 02 09 00.
Hose strap (16)	slacken, tighten.
Securing tab (22)	bend up.
Sleeve nut (20)	unscrew.
Oil heat exchanger	detach from cooling hoses (15) and (17), remove, install.

Installation notes

Gasket (2) of heat exchanger (19)	replace.

The anti-twist lock (arrow) on the heat exchanger (19) must engage in the recess (arrow) in the bottom part	of the oil filter (1).
Sleeve nut (20)	tighten to 40 Nm and secure with metal tabs (22).
Cooling system	check for leaks (20–0170).
Engine	run, check for leaks.
Engine oil level	check, adjust to correct level.

Tightening torque in Nm

Sleeve nut of oil-to-coolant heat exchanger	40

Special tools

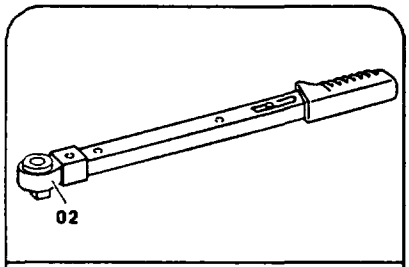

001 589 72 21 00

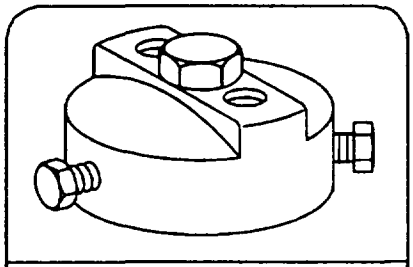

103 589 02 09 00

Commercially available tool

7 mm socket wrench hexagon on flexible shaft for hose clip with worm drive	eg.	Hazet D–42857 Remscheid Order no. 426-7

Reinforcing of sealing surface on heat exchanger to oil filter on models with automatic transmission

The sealing surface to the oil filter element has been reinforced.
Dimension (A) is now 60.5 mm (was 64 mm) in diameter, dimension (B) 73 mm (was 74 mm) in diameter.

Production breakpoint: 06/1986

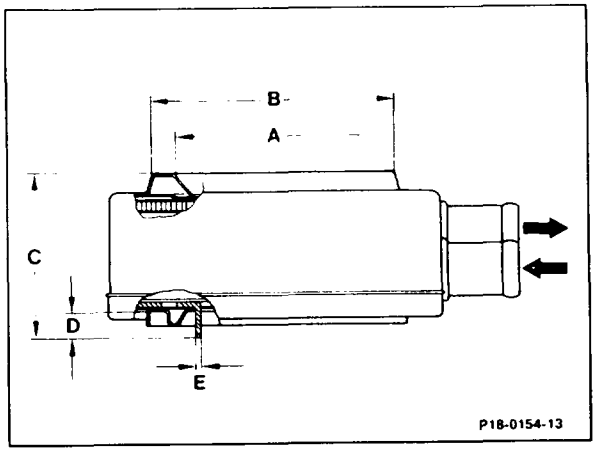

Locating web reinforced

The locating web has been reinforced.
Dimension (C) is now 52.4 mm (was 52.9 mm), dimension (D) 7.7 mm (was 9.0 mm), dimension (E) 1.8 mm (was 0.8 mm).

Production breakpoint: 07/1986

4-plate heat exchanger instead of 6-plate heat exchanger on models with automatic transmission

A 4-plate heat exchanger is now used (previously 6-plate heat exchanger). The height of the housing (c) is 36.6 mm (was 49 mm); the sleeve nut is 48 mm long (was 56.5 mm).
Bracket and shape of coolant pipe from heat exchanger to coolant pump and of heating pipe from cylinder head to heater have been modified.

B present version

Production breakpoint: 06/1988

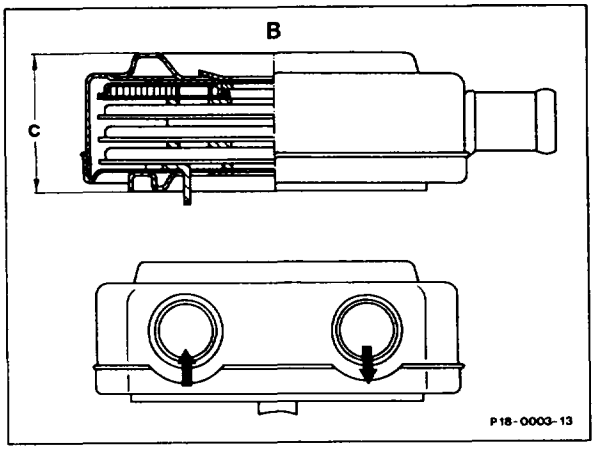

Coolant feed pipe extended on models with automatic transmission

The coolant feed pipe has been extended and the coolant hoses modified to facilitate removal and installation.

Production breakpoint: 06/1989

18–2100 Removing and installing oil pump

Preceding work:
Oil sump removed (01–3100).

Operation no. of operation texts and work units or standard texts and flat rates
18–6020 – 18–6025

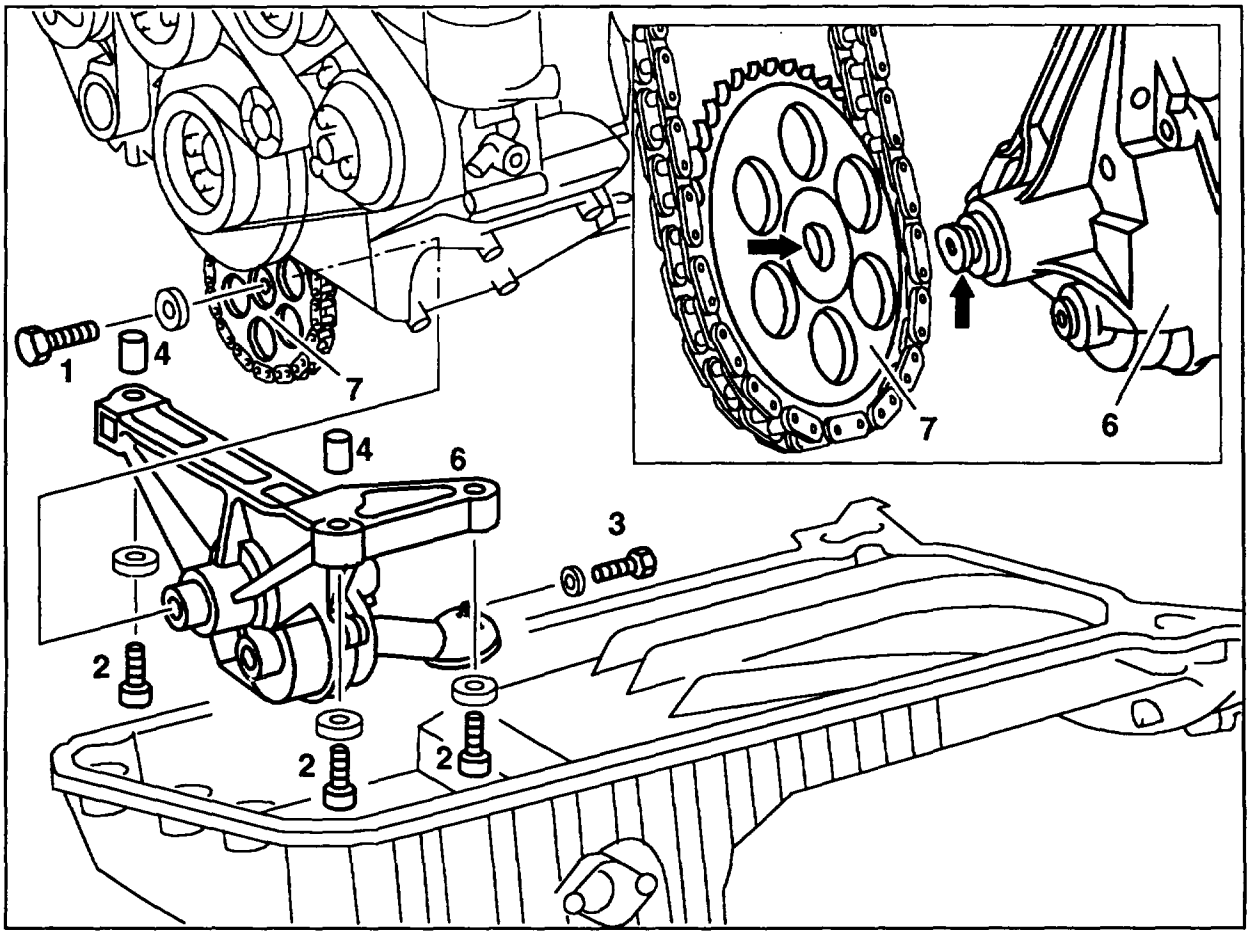

P18-5260-57

1	M8 × 20 bolt	3	M6 × 25 bolt + washer
2	M8 × 35 bolt + washer (hexagon socket)	4	Dowel sleeve

Bolt (1) of oil pump drive gear (6) . . . . . unscrew, screw on (32 Nm)

Oil pump drive gear (7) at oil pump (6) . . . . . pull off, fit on.

Installation note

Install oil pump drive gear (6) with convex face pointing toward oil pump (6) (arrows). Pay attention to position of tensioning bracket relative to oil pump.

Oil pump (6)	unbolt, take off to the front, bolt on (25 Nm)

Installation note

Clean strainer of oil pump. Fill oil pump (6) with engine oil before installing so that it pumps engine oil as soon as it starts.

Tightening torques in Nm

Bolt of oil pump drive gear	32
Bolts of oil pump	25

Special tool

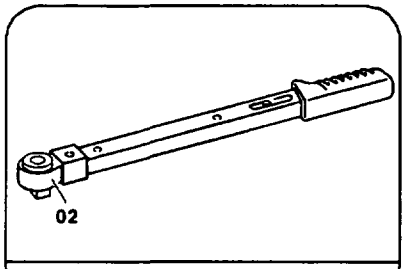

001 589 72 21 00

18–2120 Replacing and riveting oil pump chain

Preceding work:
Oil sump removed (01–3100).
Spark plugs removed (15–1031).

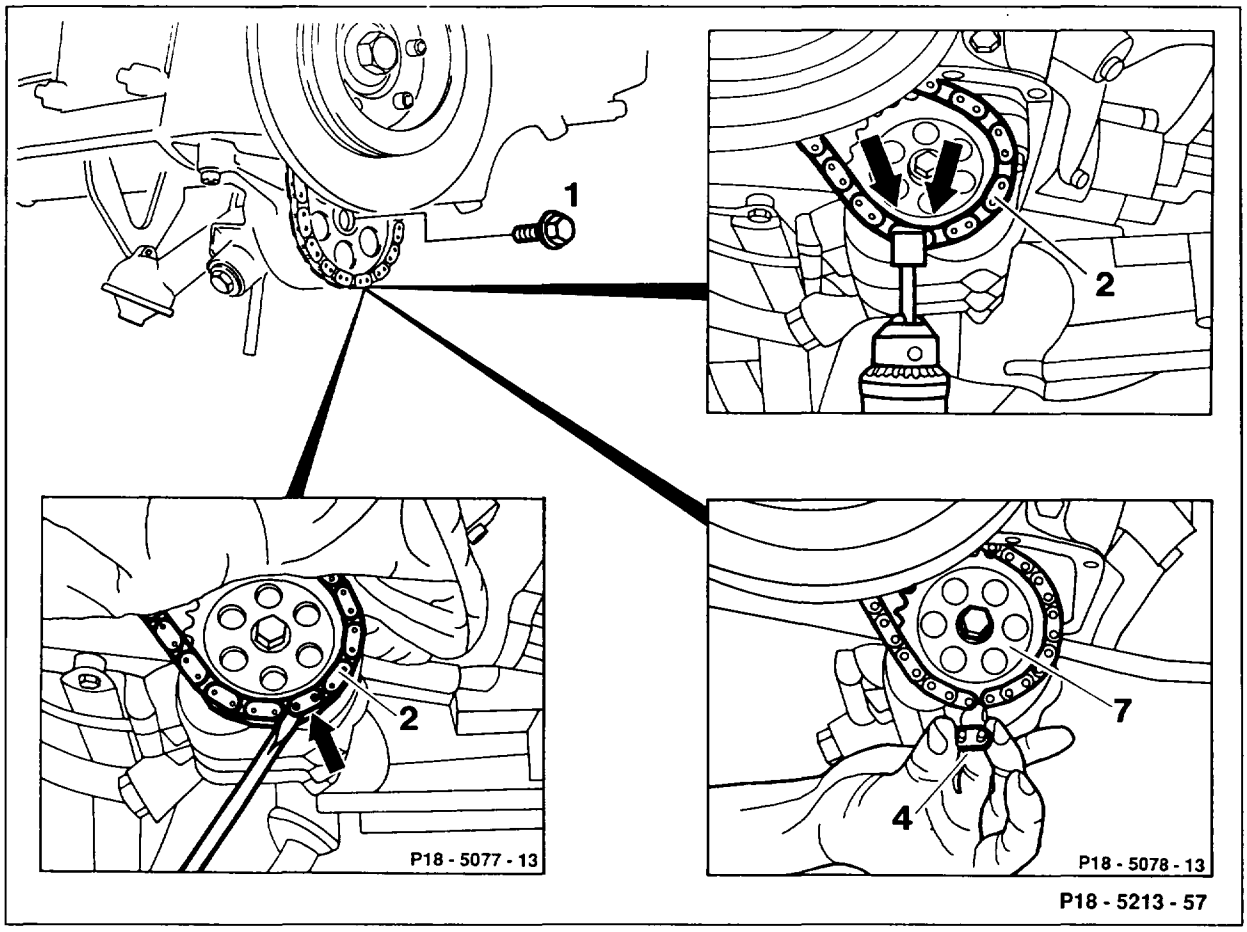

Bolt (1) of oil pump gear (7)	slacken
Chain pins of oil pump chain (2)	grind open (arrows)
Plate of oil pump chain (2)	lever off with a screwdriver
New separated oil pump chain	connect to old pump chain with a riveted link (4) part no. 000 997 14 98
Crankshaft in direction of rotation of engine	rotate with wrench socket; draw in new oil pump chain
New oil pump chain	connect to riveted link (4)
Oil pump gear (7)	unbolt, remove

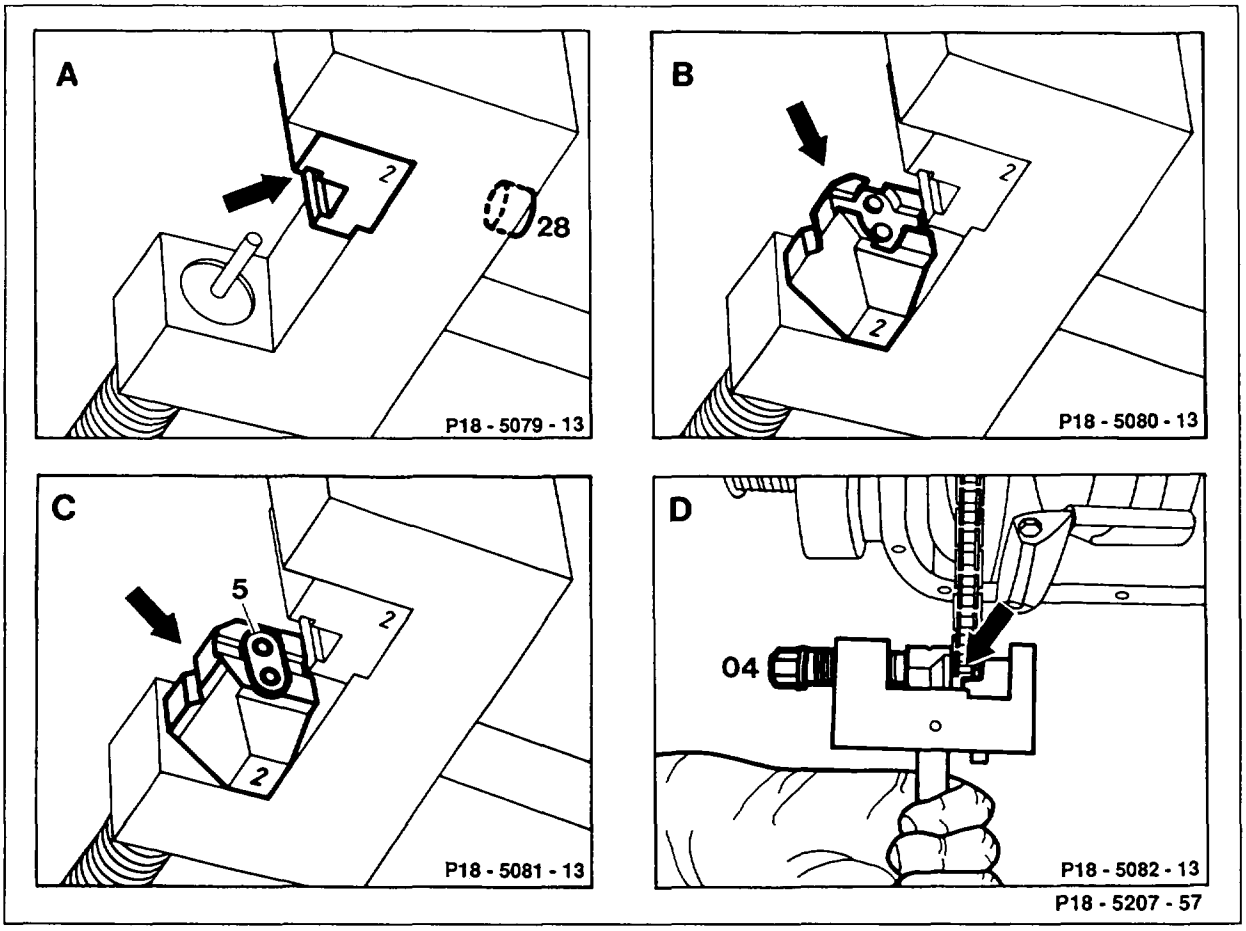

Jaws with the figure 2	insert into fitting tool 000 589 58 43 00 and screw on with screw (28) (fig. A)
Moving thrust piece with the figure 2	insert into fitting tool (fig. B)
Outer plate (5)	insert into moving thrust piece (fig. C)
Web (arrow)	fit onto both rollers of riveted link (fig. D)
Spindle (04)	screw in until tight resistance felt (fig. D)

Note
When screwing in spindle, ensure that the pins of the riveted link (4) are guided into the holes of the plate (5) (arrow) (fig. D)

Fitting tool	remove

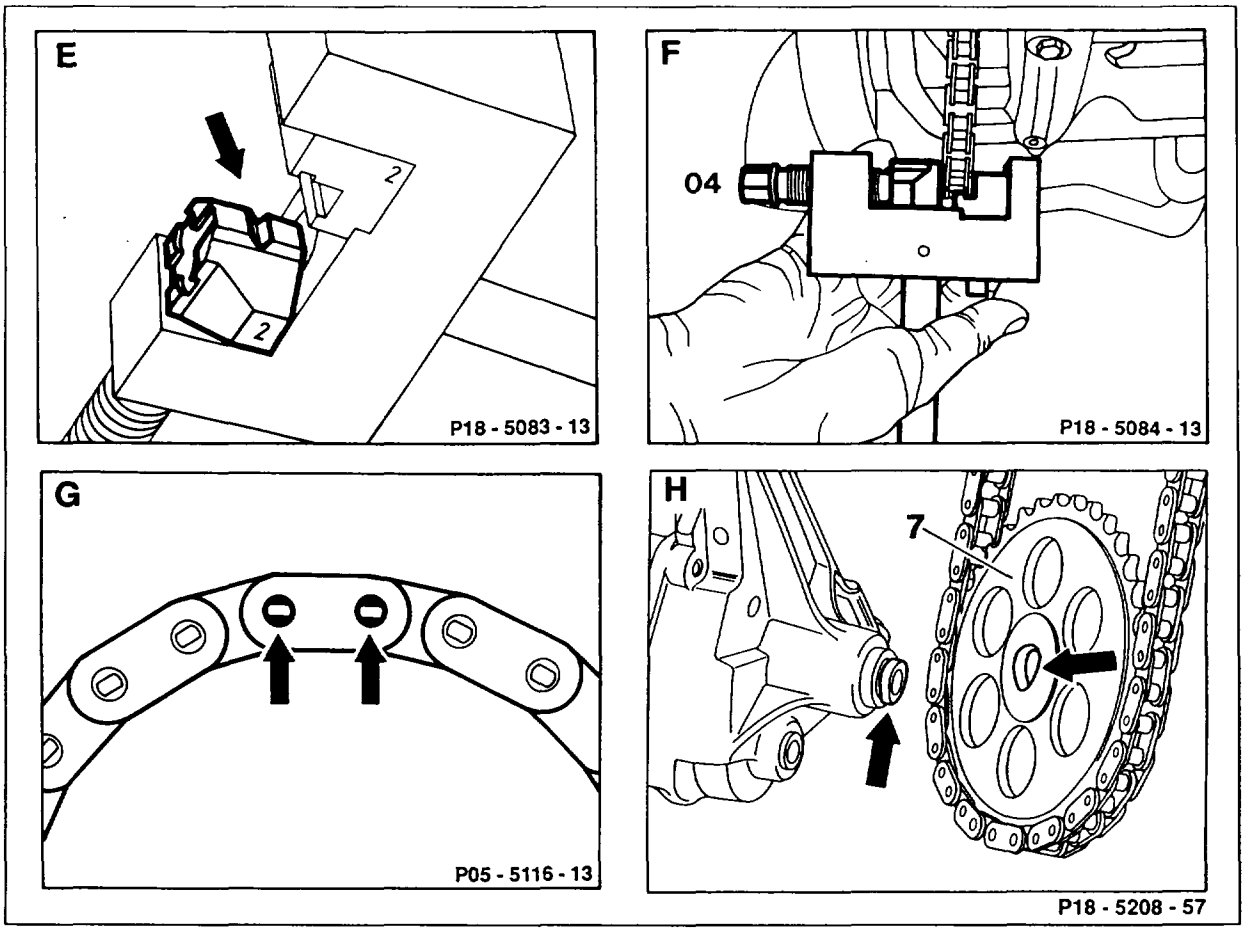

Moving thrust piece	turn over to riveting profile (arrow) (fig. E)
Fitting tool	position exactly over center of pin (fig. F)
Spindle (04)	tighten to 30 Nm (fig. F)
Pins of riveted link	rivet individually
Riveting	examine (arrows); re-rivet if necessary (fig. G)
Oil pump gear (7) with oil pump chain fitted	install with convex face toward oil pump (arrows), bolt on. Tightening torque 28 Nm (fig. H)

Special tools

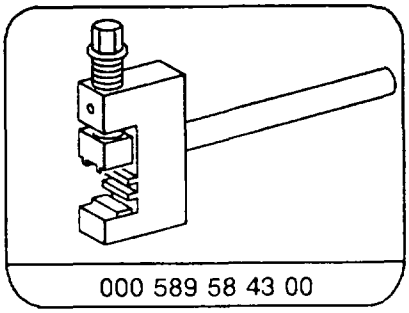
000 589 58 43 00

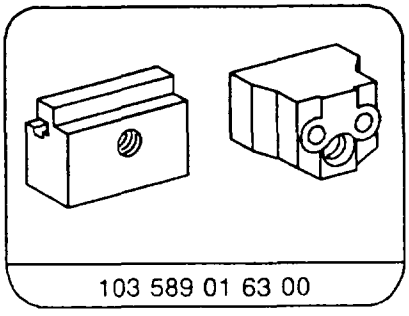
103 589 01 63 00

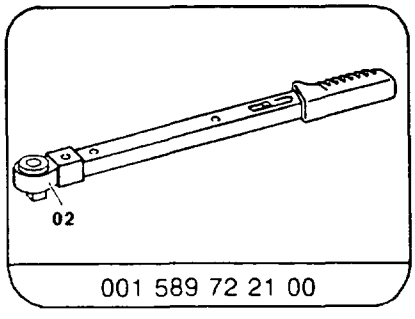

001 589 72 21 00

18–2150 Removing and installing oil pressure relief valve in oil pump

Preceding work:
Oil sump removed (01–3100).

Operation no. of operation texts and work units or standard texts and flat rates
18–5043

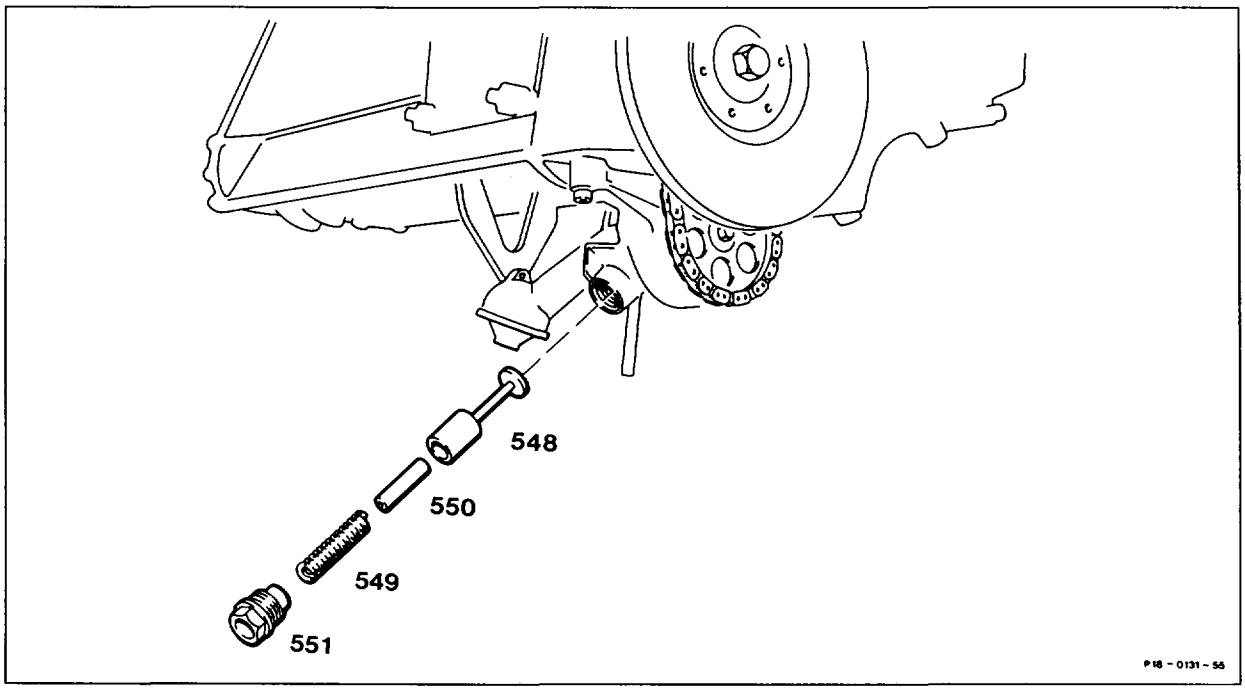

Screw plug (551)	remove, screw on (50 Nm)
	⚠ Screw plug (551) is spring-tensioned.
Compression spring (549)	remove, install.
Guide pin (550)	remove, install.
Piston (548)	remove, install.

Special tool

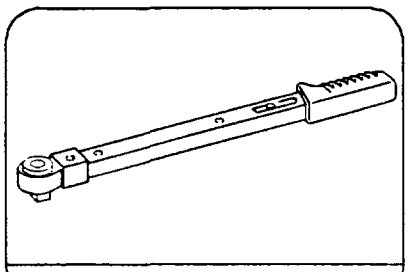

18–2180 Removing and installing oil shield at crankshaft

Preceding work:
Oil sump removed (01–3100).

Model 129

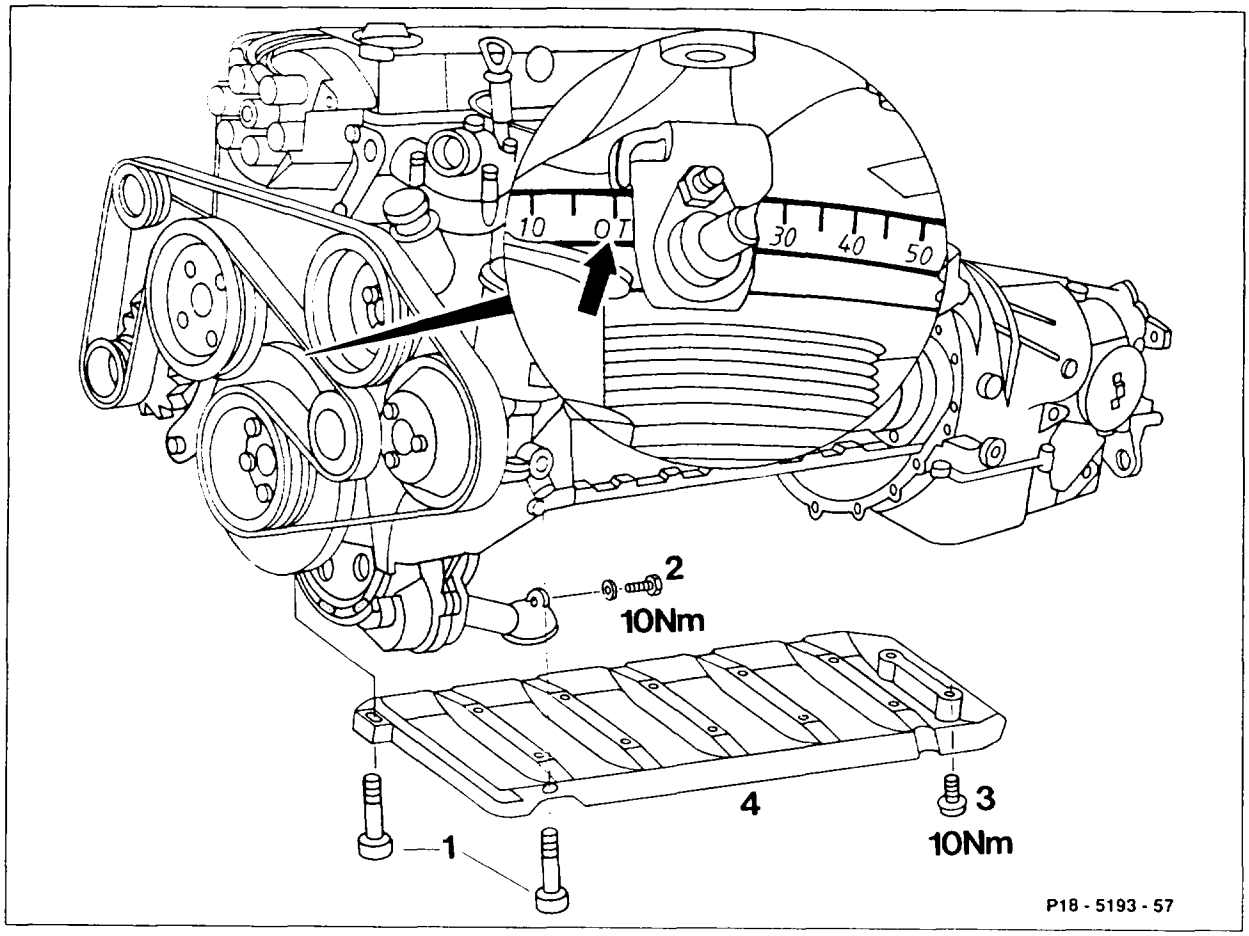

1 M8 × 35 hexagon socket screw + washer
2 M6 × 16 screw + washer
3 M6 × 12 hexagon socket screw, 12 ea.

Piston of cylinder 1	move to TDC (arrow) so that crankshaft webs of cylinder 2 are facing up.
Screws (1) of oil pump and screw (2) of intake manifold support	unscrew, screw on, M6 10 Nm; M8 25 Nm;
Screws (3)	unscrew, screw on (10 Nm).
Oil shield (4)	remove, install.

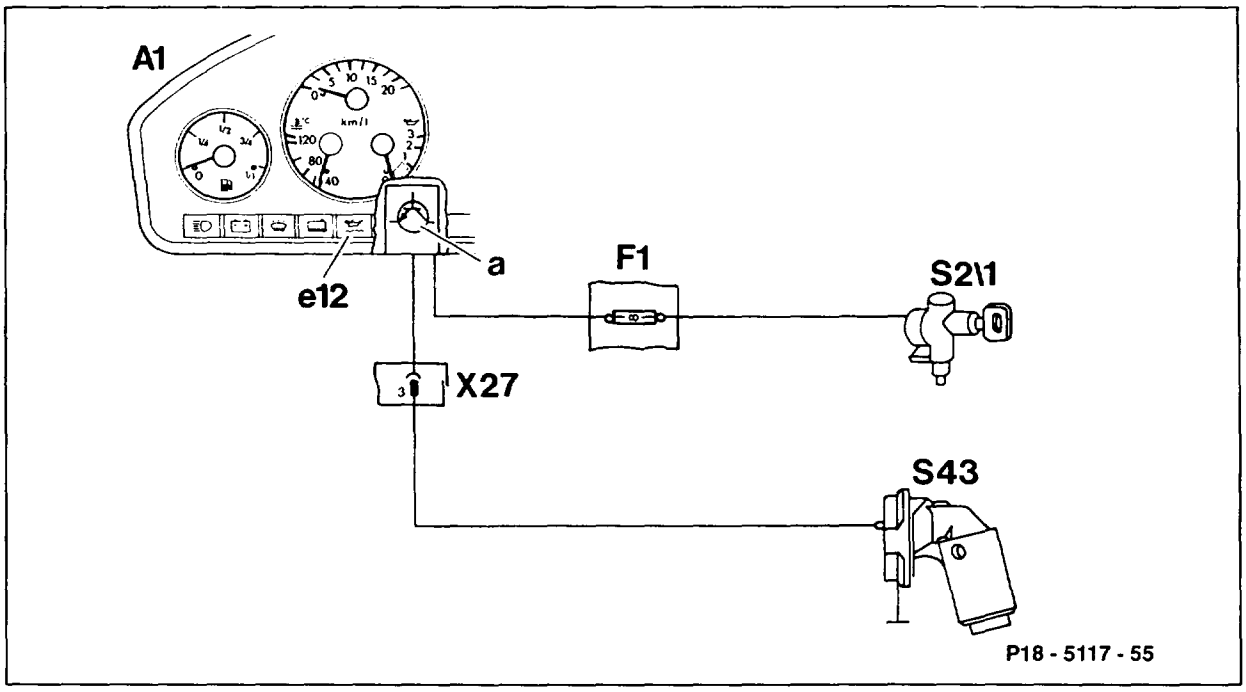

A1	Instrument panel	S2/1	Ignition starter switch
a	Microprocessor (Base plate)	S43	Oil level sensor
e12	Oil level indicator lamp	X27	Plug connection, starter harness
F1	Fuse and relay box		

General

The electrical oil level gauge monitors the oil level in the sump when the engine is running and the engine oil temperature is above 60 °C. When the ignition is switched on, the indicator lamp lights up and goes out as soon as the engine is started.

Operation

The engine oil in the oil level sensor (S43) is matched to the engine oil level in the sump through the drain hole (c). If the engine oil is at the correct level, the contact (arrow) is closed by the float (6) with a solenoid (7) and a permanent input signal (vehicle ground) is supplied to the microprocessor (a) in the electrical base plate of the instrument panel (A1).

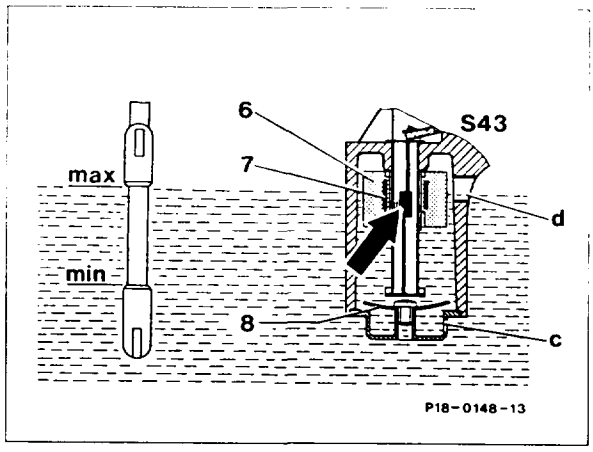

If the engine oil level is too low, the float (6) moves down and opens the contact (arrow). The input signal is thus interrupted and after 60 seconds (switching lag of microprocessor (a) in the base plate), the oil level indicator lamp (e) lights up. If the engine oil level is too low or if there is an open circuit in the wiring, the oil level indicator lamp (e12) remains on after the engine is started.
The drain hole (c) is opened by the bi-metal snap plate (8) from an engine oil temperature of 60 °C and the engine oil level in the oil level sensor is matched to that in the sump.

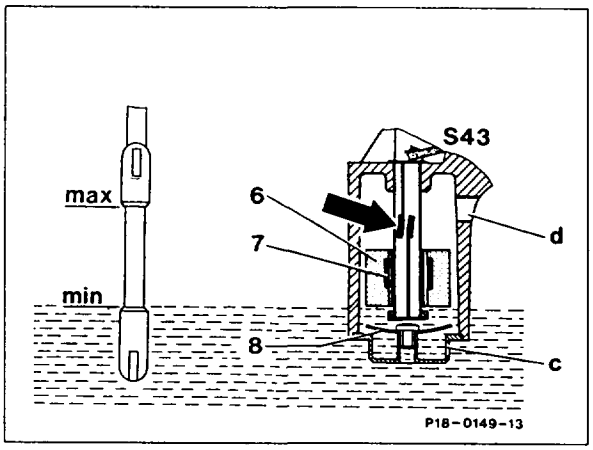

⚠ Engine oil change
Below 60 °C the engine oil is viscous and flows back only slowly into the sump; ie. a reading measured below 60 °C does not correspond to the actual oil capacity.
When changing the engine oil, the oil level sensor (S43) is filled through the vent hole (d) as the hole (c) is closed as a result of the cold engine oil at approx. 30 °C.

18–3300 Removing and installing oil level sensor

Preceding work:
Bottom engine compartment panel removed (Maintenance Manual Volume 2, Op. no. 6190).

Operation no. of operation texts and work units or standard texts and flat rates
18–4111, 18–4113

Engines except 4MATIC

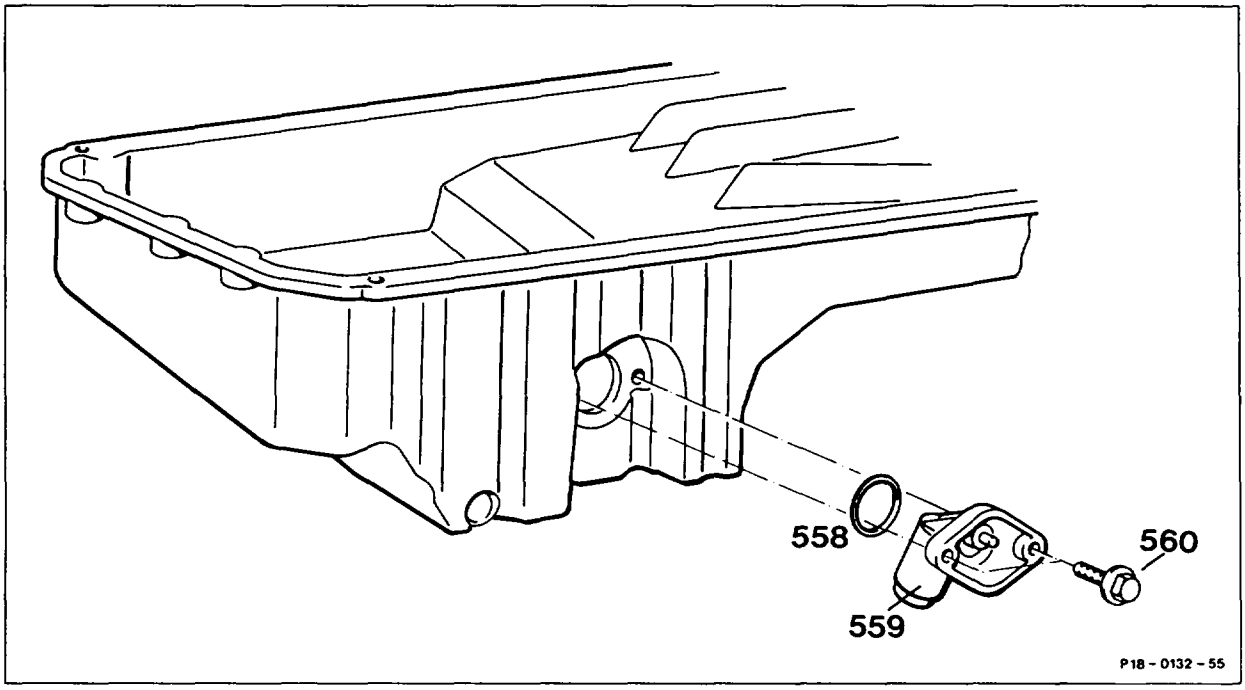

Engine oil	partially drain (about 2.5 liters), pour in (18-0020)
Connector at oil level sensor (559)	unplug, plug in
Oil level sensor (559)	remove, install
O-ring (558)	replace
Engine	run and check for leaks

Note
For operation of oil level gauge see (18-3050)

Notes

Modified seal between oil level sensor and oil sump

The seal between oil level sensor and oil sump has been improved by modifying the material of the O-ring. The diameter is now 3.15 mm (was 3 mm).
Identification: color green (was black)

Production breakpoint: 09/1986

Improved seal between oil level sensor and oil sump

An improved seal between oil level sensor and oil sump has been achieved by altering the size of the O-ring.

Production breakpoint: 06/1987

Size	Previous version	Present version
d_1	40.20 mm	37.20 mm

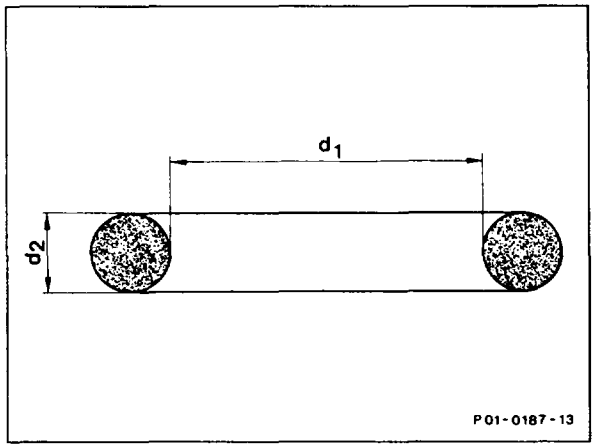

4MATIC engine

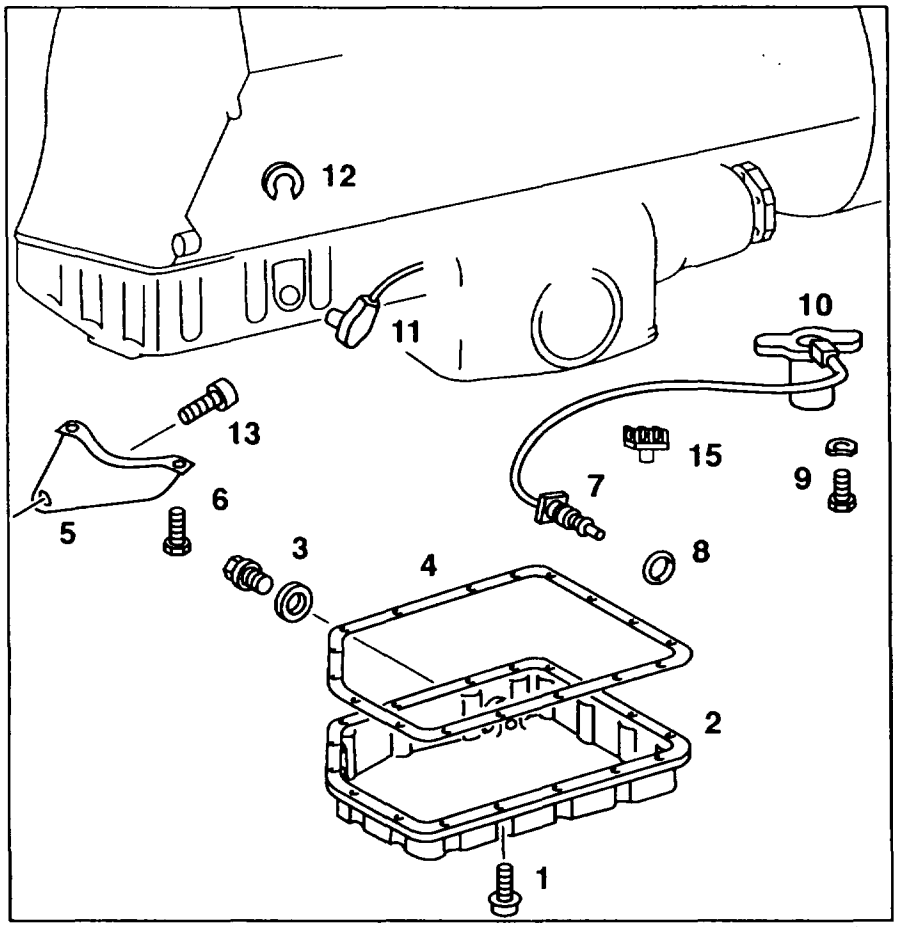

P18-5326-37

Engine oil	drain, collect, pour in (18-0020)
Bottom part of oil sump (2)	remove, replace gasket (4), install (10 Nm)
Connector (11) and locking element (12)	unplug, plug in
Bolts (13) and (6)	unscrew, screw on (10 Nm)
Supporting bracket (5)	take off, fit on
Oil level sensor (10)	unbolt, bolt on
O-ring (8) at connector (7)	replace

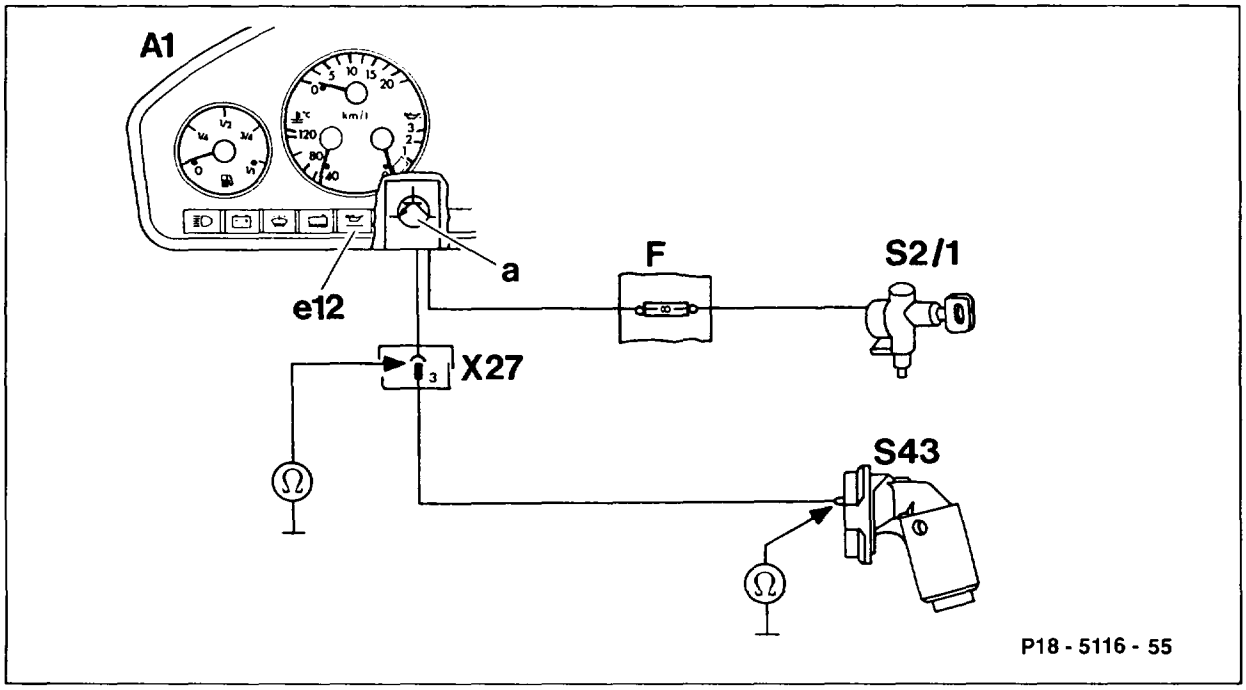

A1	Instrument panel	S2/1	Ignition starter switch
a	Microprocessor (base plate)	S43	Oil level sensor
e12	Oil level indicator lamp	X27	Plug connection, starter harness
F1	Fuse and relay box		

When dealing with the following complaints:

A: When key in position "2", indicator lamp (e12) . . . . . does not light up.

B: When engine oil at "max." level and engine running,
indicator lamp (e12) . . . . . shows a steady light.

C: When engine oil at "max." level and engine running,
indicator lamp (e12) . . . . . lights up intermittently.

Test data

Resistance of oil level sensor at "max." oil level	< 0.10 Ω
Resistance of oil level sensor at "min." oil level	> 20 kΩ

Test condition

Engine oil temperature	> 60 °C
Battery voltage	12 V

Special tool

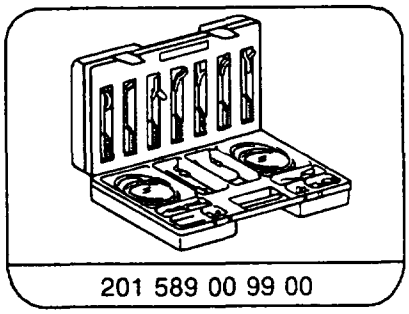

201 589 00 99 00

Commercially available tools and testers

Designation	eg. Make, Order no.
Multimeter	eg. Sun DMM-5

Test when dealing with complaint "A"

Indicator lamp (e12) does not light up when key in position "2" (requirement: voltage supply to instrument panel exists).

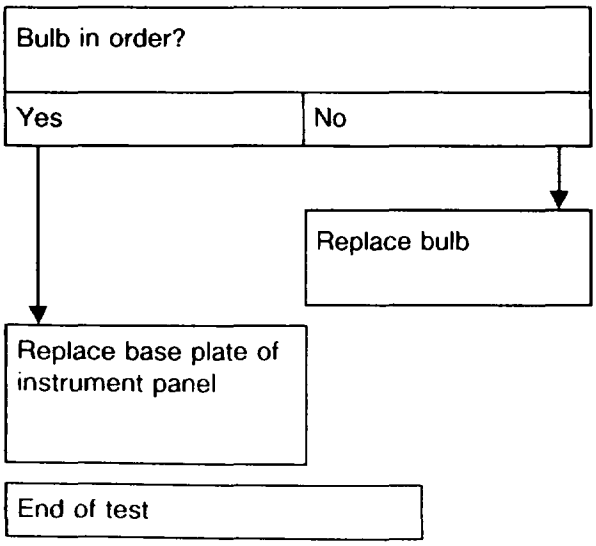

Test when dealing with complaint "B"

When engine oil at "max." level and engine running, indicator lamp (e12) shows a steady light.

Test oil level sensor

Unplug connector from oil level sensor (S43). With multimeter, test pin of plug connection to ground.

Readout: < 0.10 Ω

Yes | No

Replace oil level sensor (18-3300).

Plug in connector of oil level sensor, test cable with oil level sensor to plug connection (X27). To do this, unplug connector of plug connection (X27) and test pin 3 of plug connection to ground with multimeter.

Readout: < 0.10 Ω

Yes | No

Open circuit in starter wiring harness.

Replace base plate of instrument panel or open circuit in wiring harness to base plate.

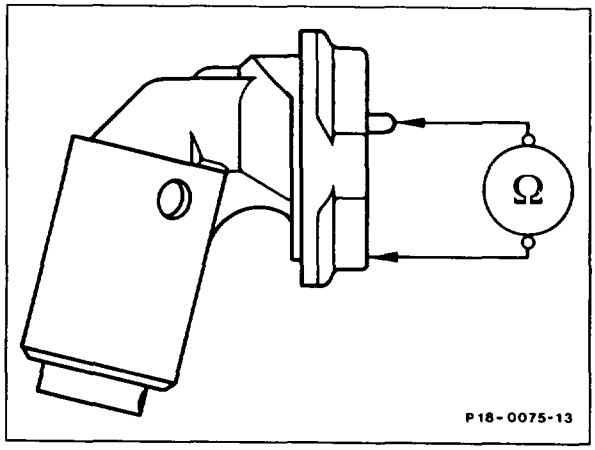

Test when dealing with complaint "C"

Indicator lamp (e12) lights up intermittently when engine running and oil at correct level.

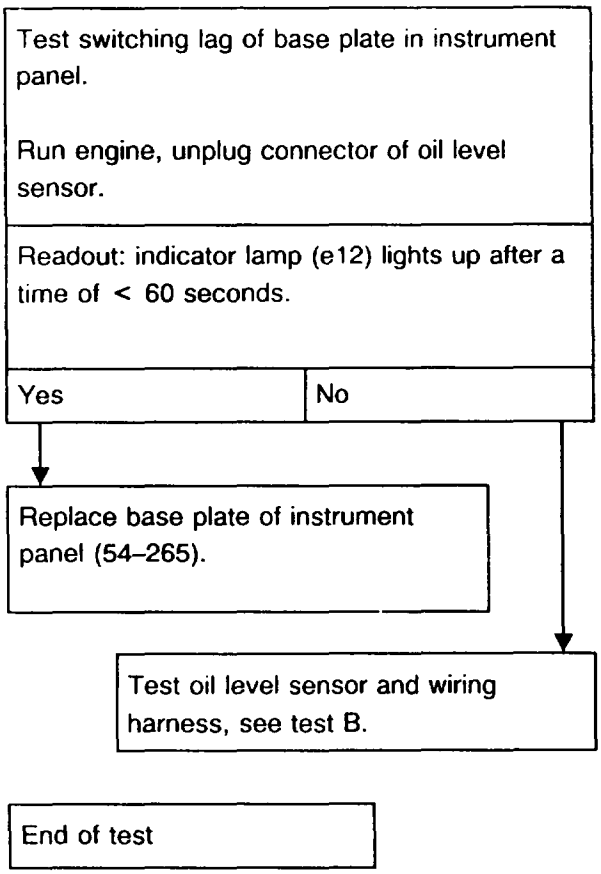

18–3500 Checking dipstick and guide tube

Preceding work:
Warning instructions when engine running (01-0085).

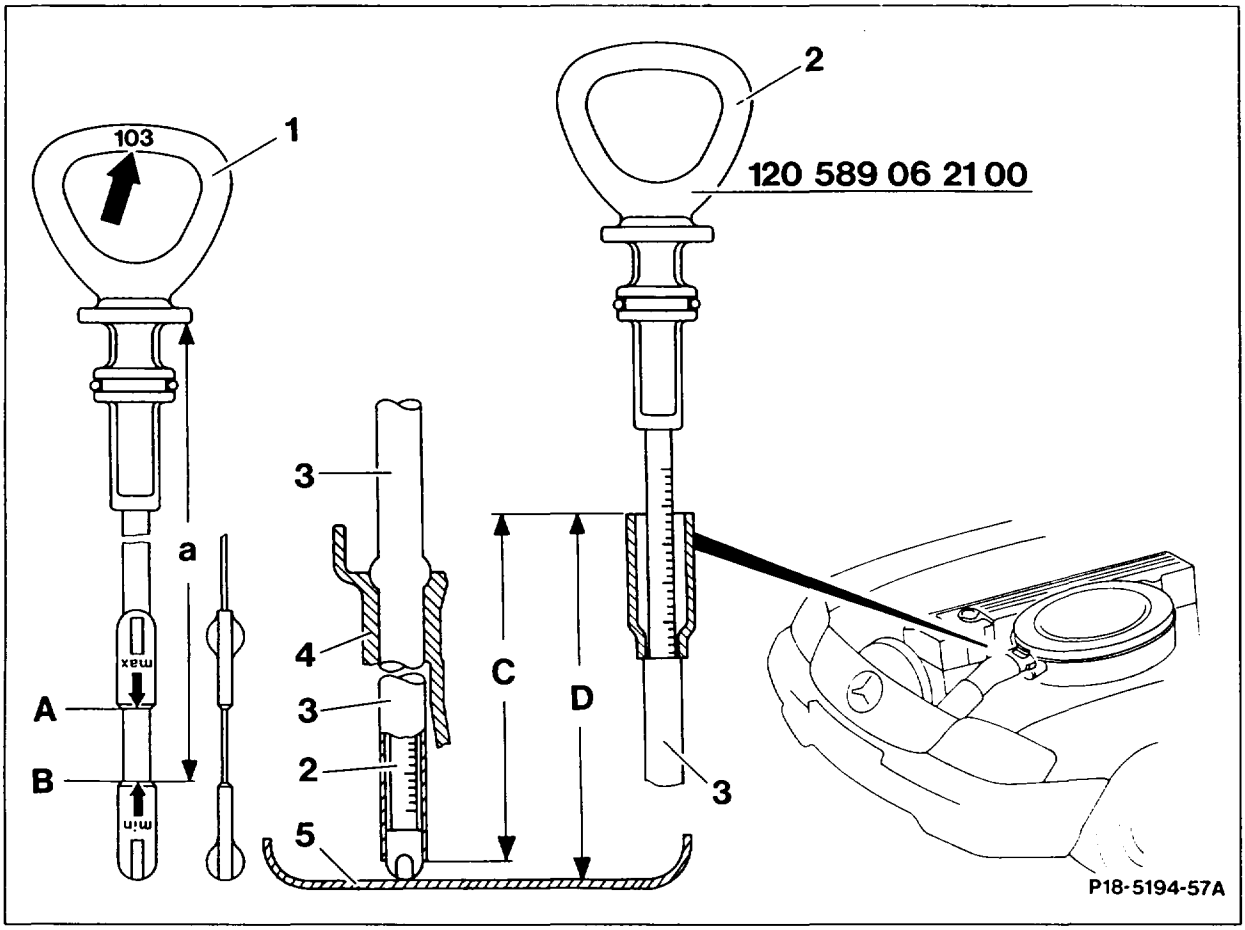

1	Dipstick	4	Crankcase
2	Test dipstick 120 589 06 21 00	5	Oil sump floor
3	Dipstick guide tube		

Dipstick (1) ..... remove.
Code number (arrow) on dipstick (1) ..... check according to table.
Test dipstick (2) 120 589 06 21 00 with millimeter gauge facing forward ..... insert as far as oil sump floor (5).
Size (D) ..... check according to table.

Test data of dipstick and guide tube in mm

Model	A to B on dipstick	a	C [1])	D	Code number [2])
107	22	513	591.5	595	10308
124	22	513	591.5	595	10308
124 4MATIC	22	517	604.5	608	
126	22	513	591.5	595	10308
129	18	495[3])	574.5	579[4])	10308
201	22	513	591.5	595	10308

1) Measured in middle of guide tube.
2) In dipstick handle.
3) Size a was 512 up to engine 103.984-10-000 081 and 103.984-12-000 117.
4) Size D was 585, C was 580.5 up to engine 103.984-10-001887 and 103.984-12-007 425. Standard as of 06/1992.

Special tool

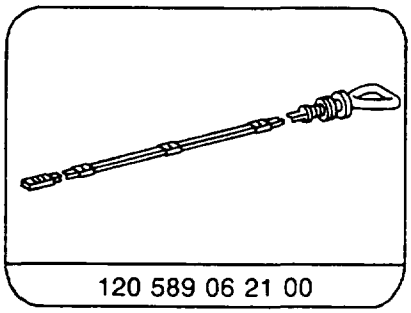

⚠

Engine 103.984, model 129 up to 06/1992
When dealing with the complaint: oil level at dipstick too low although specified quantity of oil poured in, or oil level warning lamp does not come on until oil level has dropped below "min" marking on dipstick.
Remedy: install dipstick guide tube with size (D = 579 mm).
Quantity of oil then when changing oil and filter 6.5 liters.

18–4150 Replacing oil nozzle return lock

Preceding work:
Cylinder head removed (01–4150).

Operation no. of operation texts and work units or standard texts and flat rates

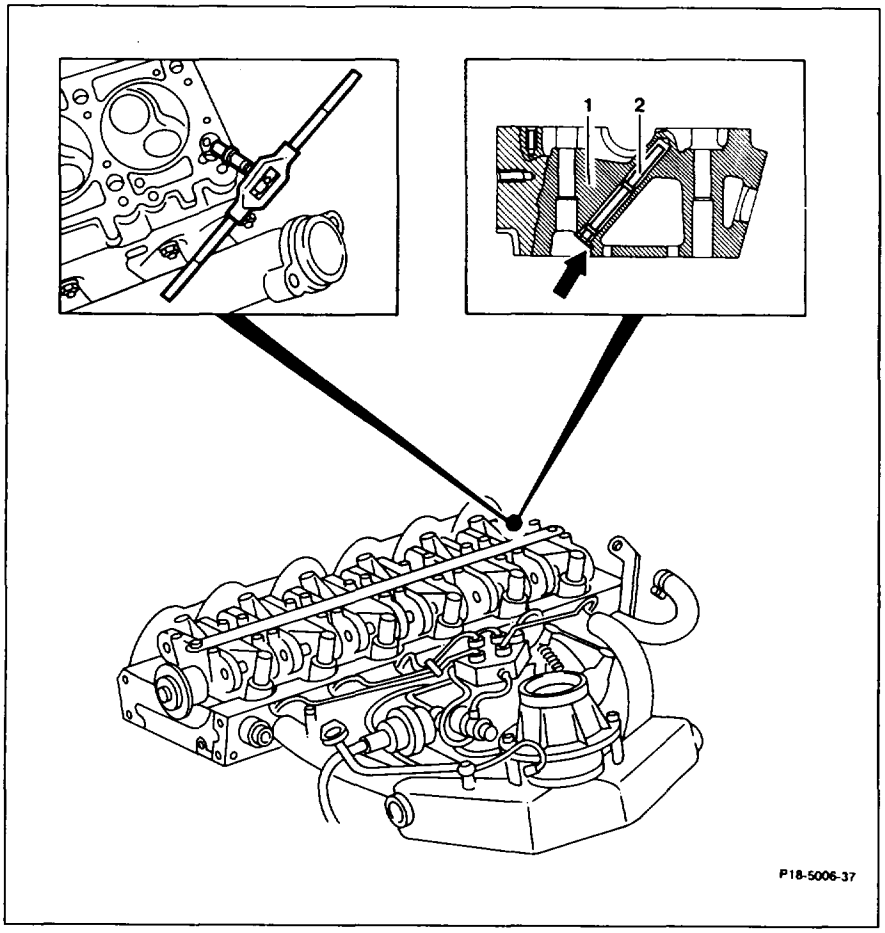

Oil nozzle return lock (2)	tap thread about 5 mm deep
Oil nozzle return lock (2)	remove with impact extractor 116 589 20 33 00 and threaded bolt 100 589 00 34 00
New oil nozzle return lock (2)	knock in with a suitable drift as far as the shoulder (arrow). Pay attention to size A; see note.

Note:

Modified oil nozzle return lock

As of 12/1986 an oil nozzle return lock with shoulder (arrow) is installed in the cylinder head. This prevents the oil migrating up. When performing repairs, install oil nozzle with shoulder (arrow).

Size A = 15.2 mm

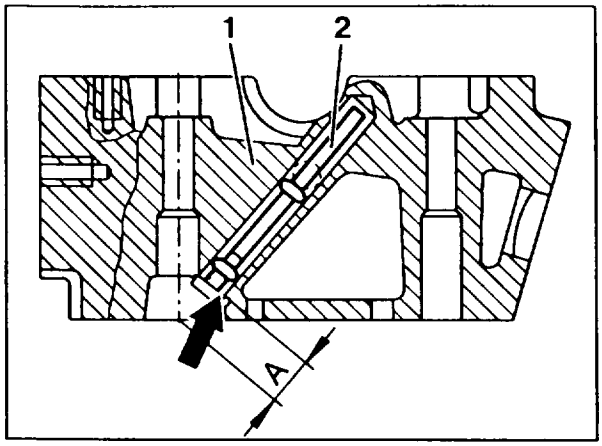

P18-5321-13

Modified oil nozzle return lock, production breakpoint: 12/1986

Model	Engine	Engine end no. manual transmission	Engine end no. automatic transmission
107.041	103.982	001013	004669
124.026	103.940	010540	016408
124.030 124.090	103.983	011367	056595
126.020	103.941	001938	006387
126.024 126.025	103.981	003344	026791
201.029	103.942	000133	000957

Special tools

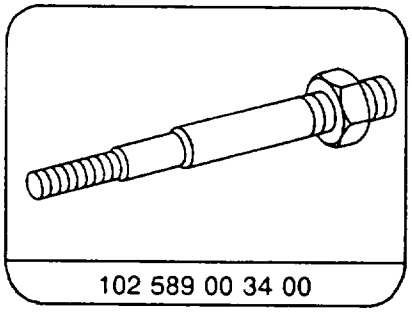

102 589 00 34 00

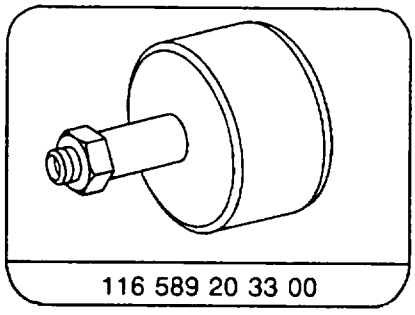

116 589 20 33 00

18–4200 Removing and installing camshaft oil pipe

Preceding work:
Cylinder head cover removed (01-0500)

Operation no. of operation texts and work units or standard texts and flat rates

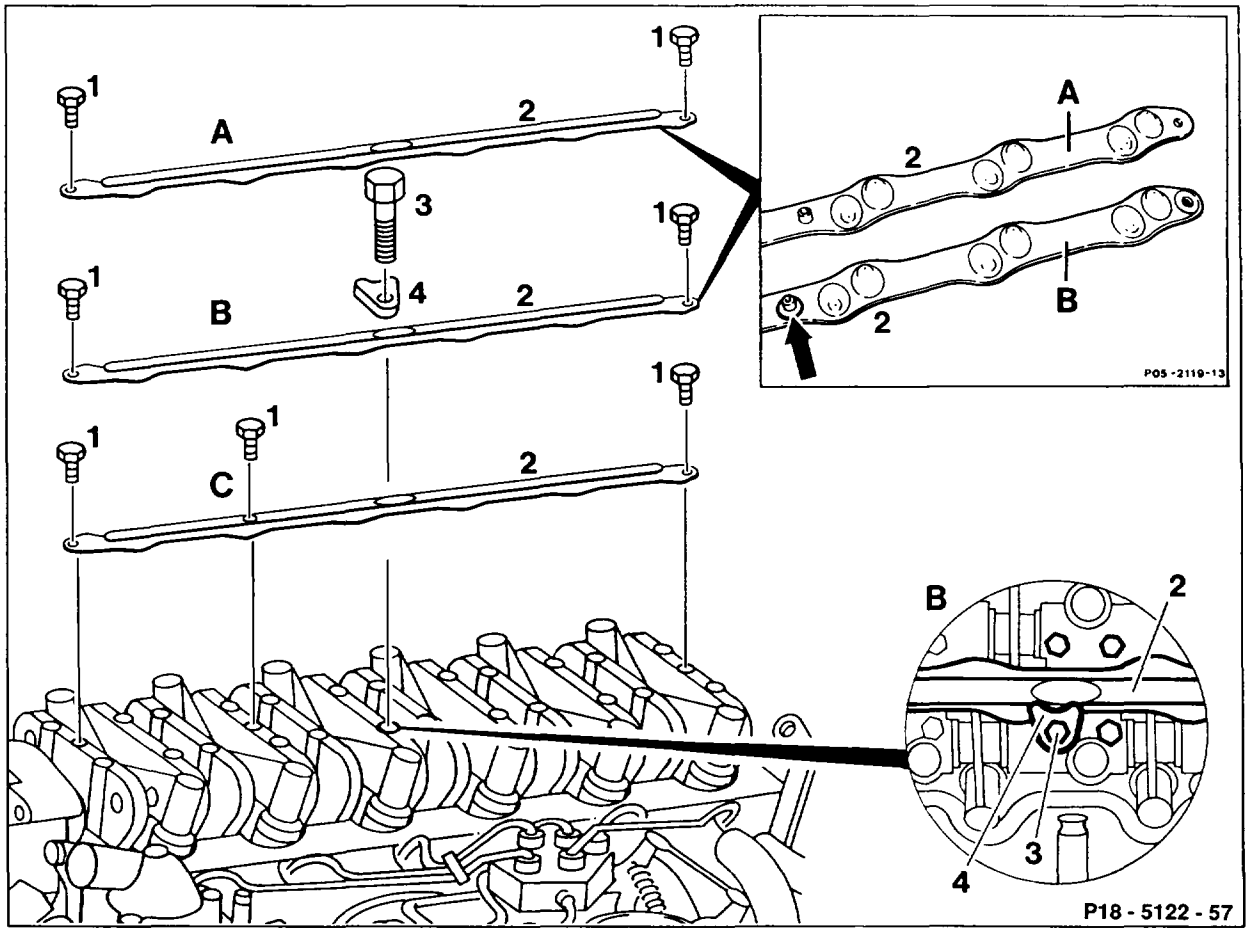

A — Oil pipe 1st version up to 10/86.
Attached with 2 M5 × 10 bolts, when performing repairs replace oil pump and attachment with version B.

B — Oil pipe 2nd version from 10/86 to 06/89 with washer soldered on (arrow).
Attachment in addition with M8 × 73 10.9 bolt (3) and half-moon shaped retaining plate (4).

C — Oil pump 3rd version as of 06/1989.
Attached with three M5 × 10 bolts.

Bolts (1) or (1) and (3) with retaining plate (4) . .	unscrew.
Camshaft oil pipe (2)	remove, install.
Bolts (M5) and tapped holes (M5)	degrease.

Tapped holes (M5)	insert one drop each of Loctite 648, part no. 003 989 32 71 10.

Note

This prevents the bolts	slackening.
Bolts (1) or (1) and (3) with retaining plate (4) . . .	screw on. Tightening torque: M5 5 Nm M8 21 Nm
Engine	wait at least 15 minutes before starting (basic curing time).

Modification of arrangement of threads at camshaft bearing caps

The distance between oil pump and rocker arm has been enlarged as a result of the modified arrangement of the threads at the camshaft bearing brackets as 10/1985.

Size A = 45.5 mm (was 44 mm)

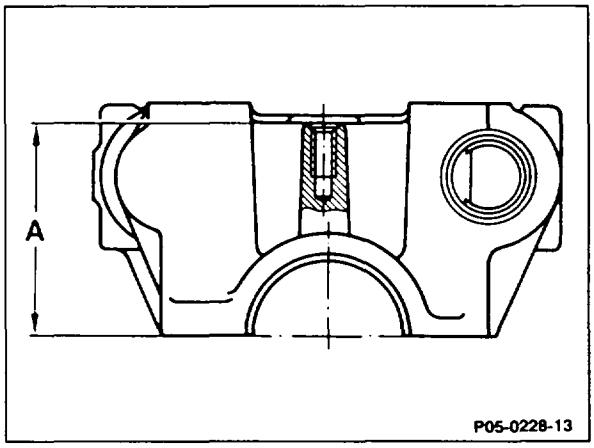

Modified arrangement of threads, production breakpoint: 10/1985

Model	Engine	Engine end no.		Vehicle ident end no.	
		man. transm.	autom. transm.	A	F
107.041	103.982	000154	000797	039305	*
124.026	103.940	001674	001697	130409	*
124.030 124.090	103.983	001901	010227	*	000652
126.020	103.941	000204	000812	205283	*
126.024 126.025	103.981	000479	003337	*	*

* not recorded

Oil pipe 2nd version (B)

The oil pipe is additionally attached to the 3rd rocker arm bearing bracket at the rear hole (intake manifold end) by a retaining plate and an M8 × 73 10.9 bolt without washer.

Oil pipe 2nd version (B), production breakpoint: 05/1986 up to 06/1989

Model	Engine	Engine end no.		Vehicle ident end no.	
		man. transm.	autom. transm.	A	F
107.041	103.982	000495	002463	050167	*
124.026	103.940	004621	007048	247878	*
124.030 124.090	103.983	005188	029831	249195	*
126.020	103.941	000951	003725	254136	*
126.024 126.025	103.981	001986	015232	255612	*
201.029	103.942	from start of production		229220	*

* not recorded

Oil pipe 3rd version (C)

The oil pipe is attached to the 3rd rocker arm bearing bracket by a M5 × 10 bolt. The previous retaining plate is no longer fitted.

Oil pipe 3rd version (C), production breakpoint: 06/1989

Model	Engine	Engine end no.	
		man. transm.	autom. transm.
107.041	103.982	002398	010995
124.026	103.940	027051	067489
124.030 124.050 124.090	103.983	031752	171810
124.226	103.943	000444	001057
124.230 124.290	103.985	002135	007954
126.020	103.941	004189	013701
126.024 126.025	103.981	007141	089946
129.060	103.984	from start of production	
201.029	103.942	014449	031481

* not recorded

Checking coolant level/antifreeze protection

2010

All models

> ⚠ **WARNING!**
> Open expansion tank/radiator cap **only** at coolant temperatures **below 90°C.**

Specified coolant mixture:

(Antifreeze protection to approx. -37°C)
50% water
50% antifreeze and anti-corrosion protection.
Do not use additives.

Check concentration of antifreeze/anti-corrosion protection. Top up only on separate order.

The corrosion protection/antifreeze protection should not drop below 40% by volume (corresponding to antifreeze protection to approx. -25°C), since with too low a proportion, corrosion protection becomes inadequate.
Use only approved antifreeze. Refer to Factory Approved Service Products list.

- With coolant loss not caused by normal use determine the cause and repair on separate order.

- Opening: Turn cap only to first detent to release excess pressure.

- Turn cap to second detent and remove cap from expansion tank /radiator.

Coolant level should be as follows:

- With cold coolant, up to mark on tank (arrow).
- With warm coolant approx. 1 cm above mark.

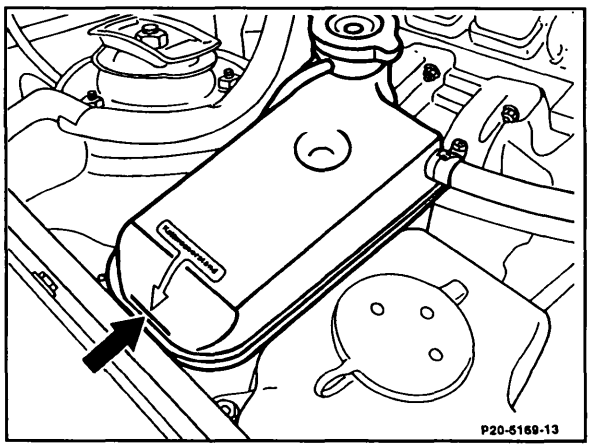

- On vehicles without separate expansion tank, up to marks as illustrated.

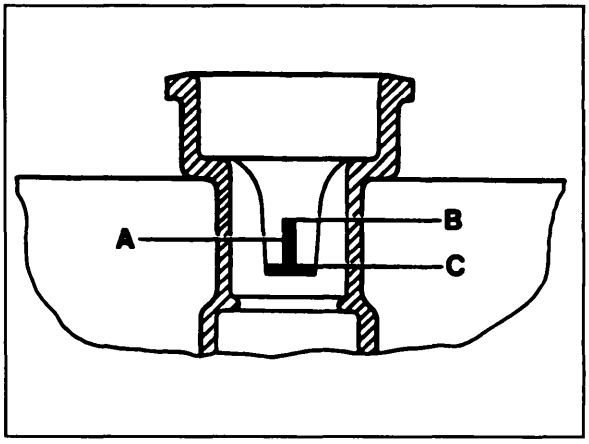

Vehicles without coolant reservoir

A Filling mark
B Coolant warm
C Coolant cold

Checking coolant level

2011

Model 107 starting 08.1985
124
126 starting 09.1985
129
140
201 starting 01.1985

⚠ **Warning!**

Open the expansion tank/radiator cap **only** at coolant temperatures **below 90°C**.

- Opening: Turn cap only to first detent to release pressure.
- Turn cap to second detent and remove cap from expansion tank/radiator.

Coolant level should be as follows:

- Up to mark printed on tank (arrow).
- With warm coolant approx. 1 cm above this mark.

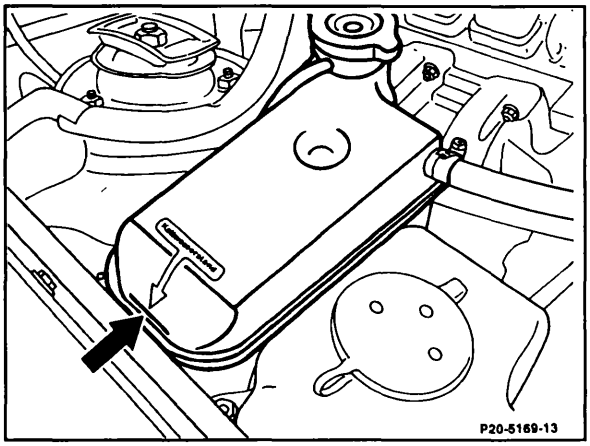

- If coolant loss is excessive, determine the cause and repair on separate order.

Checking cooling and heating system 2050

Model 107 up through 07.1985
123
126 up through 08.1985
201 up through 12.1984

Special tools

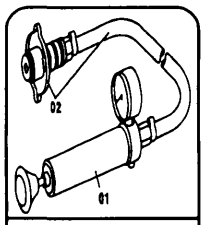

124 589 15 21 00

Commercial tools

7 mm hex. socket wrench on flexible drive for worm drive hose clamps.	obtain locally

Warning! Perform leak test on **cold engine only!**

Check hoses for porosity, hardening, swelling, cracks or chafing marks and correct routing. Replace defective hoses.

- Apply pressure of 1.0 to 1.3 bar gauge to cooling system.
- Check all hoses and connections for leakage.
- Retighten hose clamps, if required.
- Replace corroded hose clamps.
- Replace a corroded radiator/expansion tank cap.

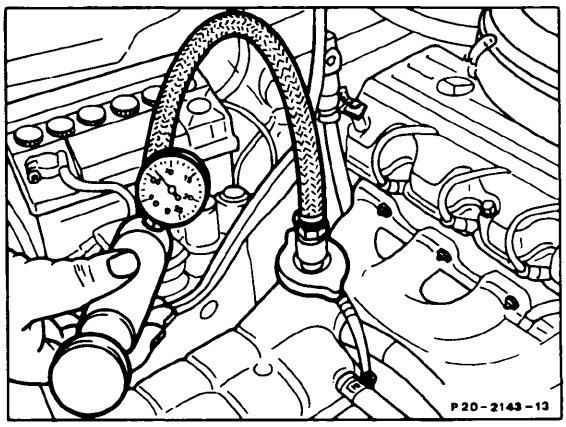

All models

On separate order

Total capacity of cooling system and ratio of antifreeze to water in liters

Model	Engine	Total capacity of cooling system incl. heater	Antifreeze protection to -37°C (50 Vol. -%)	Antifreeze protection to -45°C (55 Vol. -%)
107	116.96	12.5	6.25	7
	117.96	13.5	6.75	7.5
123	110, 616	10	5	5.5
	617.91	11	5.5	6
	617.95	12.5	6.25	7
124	103, 104, 602.96	9.5	4.75	5.25
	119	15.5	7.75	8.5
	603.96	10	5	5.5
126	103	8	4	4.4
	116.96	12.5	6.25	7.5
	117.96	13.5	6.75	7.5
	603.96/97	10	5	5.5
	617.95	12	6	6.5
129	104	11.5	5.75	6.3
	119	15	7.5	8.25
	120	15.5	7.75	8.5

Model	Engine	Total capacity of cooling system incl. heater	Antifreeze protection to -37°C (50 Vol. -%)	Antifreeze protection to -45°C (55 Vol. -%)
140	104	14.5	7.25	8
	119.970/971	16.5	8.25	9
	120	18.5	7.75	10.25
	603.96	10	5	5.5
201	102.961/985 601.921	8.5	4.25	4.75
	103.942	9.5	4.75	5.25
	102.983 602.911/961	8	4	4.5

Torque specifications (Nm)

Radiator drain plug, model 107 (w/o light alloy radiator)	6-10
Radiator drain plug, model 107 (w/ light alloy radiator), model 123, 124, 126, 129, 201	1.5-2 [1]

[1] This torque can be achieved using a washer or coin.

Coolant

Coolant composition

50% by volume of water
50% by volume of corrosion protection/antifreeze agent.

Water

Use clean water that is not too hard. Usually, though not always, tap water meets these requirements. The dissolved substances in the water can contribute to corrosion. If in doubt, have the water analyzed.

Corrosion protection/antifreeze

Corrosion protection/antifreeze must provide the following:

- Adequate corrosion and cavitation protection for all components
- Antifreeze protection
- Higher boiling point.

Approx. 50% by volume of antifreeze must be added to the water. This concentration provides antifreeze protection down to approx. -37°C.

A higher concentration is only practical with even lower ambient temperatures.

Exceeding 55% by volume of corrosion protection/antifreeze agent reduces the antifreeze protection as well as the heat dissipating ability of the coolant.

55% by volume of corrosion protection/antifreeze agent proves antifreeze protection down to approx. -45°C.

Corrosion protection/antifreeze increases the boiling point, i.e. the coolant does not vaporize as rapidly. At high coolant temperatures, coolant boil over is avoided.

Use only approved corrosion protection/antifreeze.

Checking coolant in service

Before the start of the cold season, check the coolant for antifreeze protection.

In countries with high ambient temperatures, check corrosion protection/antifreeze concentration in coolant once a year.

When refilling (after coolant loss), ensure that the coolant contains 50% by volume of corrosion protection/antifreeze (protection down to -37°C).

The corrosion protection in the coolant diminishes during operation. The coolant then has a corrosive effect.

Thee coolant should be used for a maximum of **3 years.**

Before adding in new coolant, flush the old coolant from the cooling system.

For draining and filling of coolant, see repair instruction 20-010.

Disposal of coolant

Old coolant must be disposed of according to local laws and waste water or environmental regulations.

Engine block coolant drain locations

Engine 110	Right side of engine block to rear of engine mount bracket.
Engine 116, 117, 119	Right plug is forward of RH engine mount; left plug is forward of LH engine mount.
Engine 616, 617	Right side of engine block to rear of engine mount bracket, forward of starter.

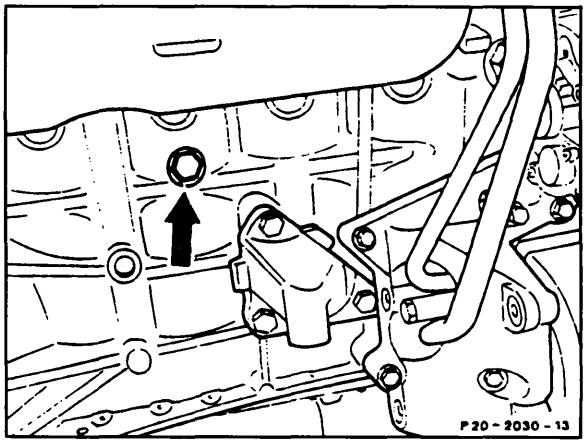

Engine block coolant drain, engine 102

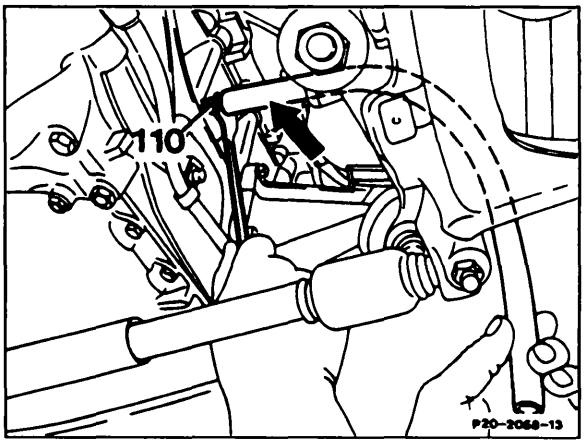

Engine block coolant drain (110) with drain hose attached, engine 103, 104

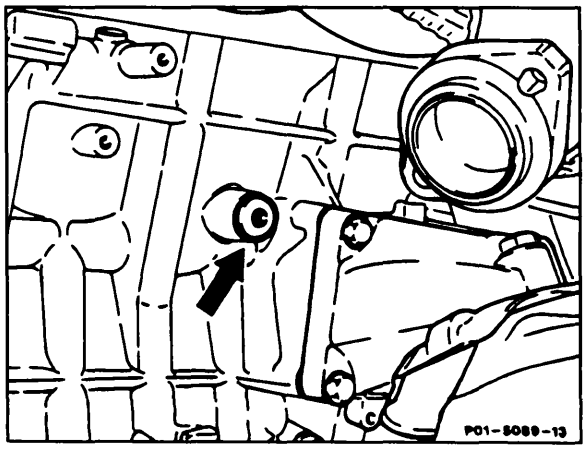

Engine block coolant drain, engine 120

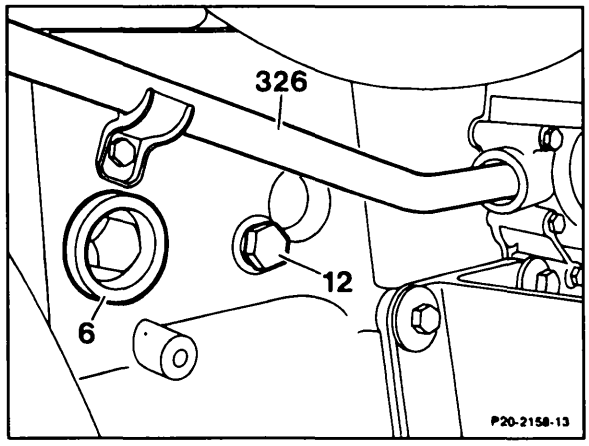

Engine block coolant drain (12), engine 601

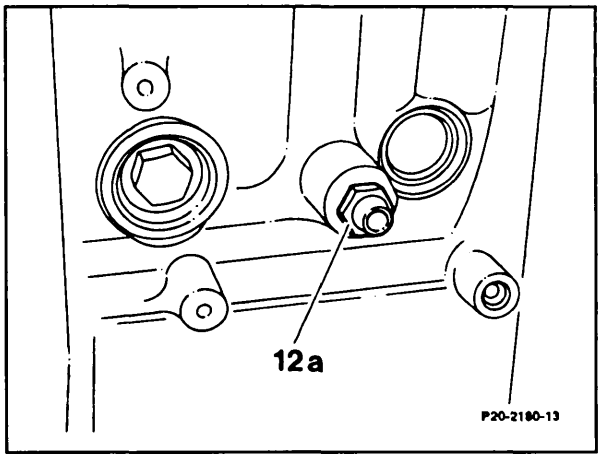

Engine block coolant drain (12a), engine 602, 603

a m b s

Modification: Model 124 with engines 104.942 and 104.992 included

Installation Instructions

Coolant Pre-heater 20.1

Model 124

To prevent the engine from cooling off completely at low ambient temperatures, an electric coolant Pre-heater is available for retrofitting. The unit, which can both heat the engine coolant and keep it warm, is installed in a drain plug bore in the engine block. An electrical plug is provided for connecting the coolant Pre-heater to standard household current supply. The unit's power consumption is 500 W at a voltage of 220 V (115V optional).

Copyright DaimlerChrysler AG 18.12.2002 CD-Ausgabe G/05/02 Will not be recorded by Modification services

The installation instructions are subdivided into the following sections:

A. Procedure
a) Model 124.020/080 with 102.92 engine
Model 124.021/041/081 with 102.96 engine
Model 124.023/043/083 with 102.98 engine

b) Model 124.036 with 119.974 engine (500E)

c) Model 124.120/180 with 601.91 engine
Model 124.125/127/185 with 602.91 engine
Model 124.13/190 with 603.91 engine
Model 124.330 with 603.913 engine (4MATIC)

d) Model 124.128/188 with 602.96 engine (turbo)
Model 124.133/193 with 603.96 engine (turbo)
Model 124.333/393 (4MATIC) with 603.96 engine (turbo)

e) Models 124.007/026/027 with 103.94 engine
Model 124.226 (4MATIC) with 103.94 engine
Models 124.030/050/090 with 103.98 engine
Models 124.230/290 (4MATIC) with 103.98 engine
Models 124.008/028/029/088 with 104.942 engine
Models 124.031/051/091 with 104.98 engine
Model 124.061 (conv.) with 104.98 engine
Models 124.032/052/066 with 104.992 engine

f) Model 124.019/040/079 with 111.940 engine (ex. c. with Tempomat)
Model 124.022/042/082 with 111.960 engine (ex. c. with Tempomat)

B. Parts order

Special tools

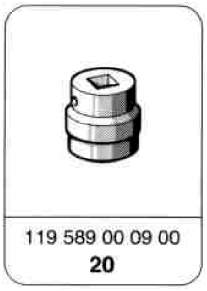

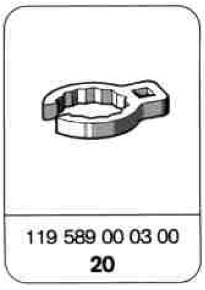

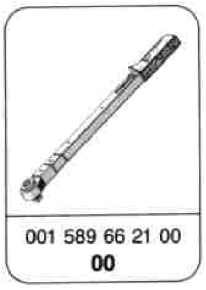

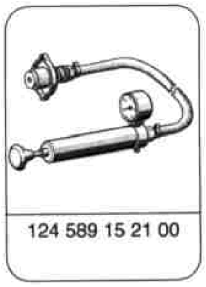

A. Procedure

Copyright DaimlerChrysler AG 18.12.2002 CD-Ausgabe G/05/02 Will not be recorded by Modification services

Shop-made, Model 124.036 only

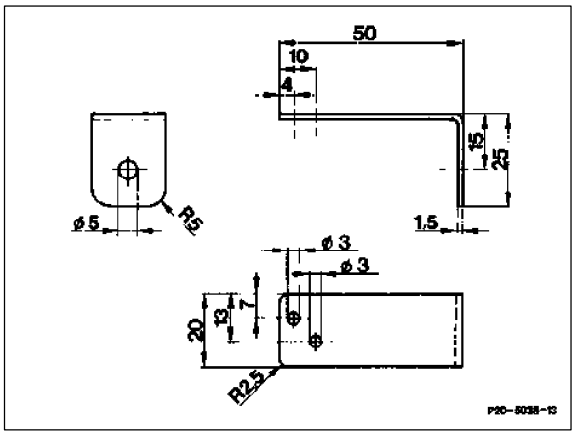

Bracket for mounting retainer for plug from coolant Pre-heater

a) Models 124.020/080 (engine 102.92), 124.021/041/081 (engine 102.96) 124.023/043/083 (engine 102.98)

1 Disconnect the ground cable from the battery.

2 Remove the lower engine-compartment insulation panels (Repair Manual 01-006).

3 Drain all coolant from engine (RA 20-010).

4 Unscrew the threaded plug (5) from the left side of the engine block.
Special tool 119 589 00 09 00.

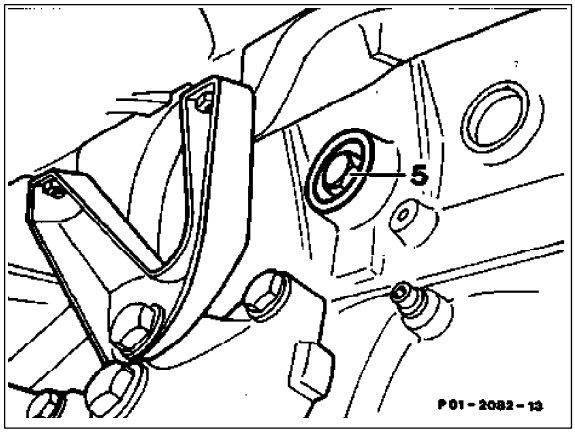

5 Install O-ring on the coolant Pre-heater (1) , then thread heater into the engine block.
Tightening
tor
q
ue: 70 Nm.

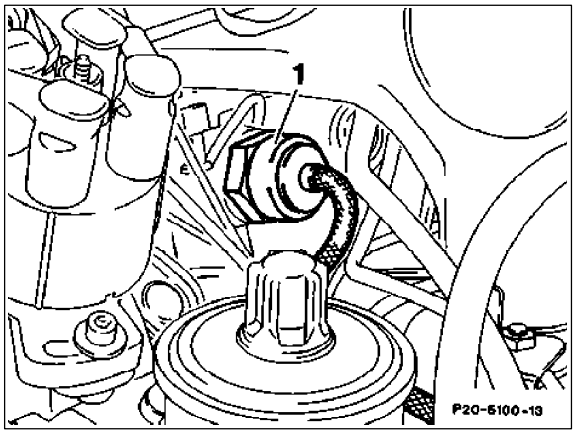

Copyright DaimlerChrysler AG 18.12.2002 CD-Ausgabe G/05/02 Will not be recorded by Modification services

6 Use cable straps (arrows) to attach the electrical lead from the coolant Pre-heater to the vacuum line.

M

Route lead well away from all potential sources of abrasion.

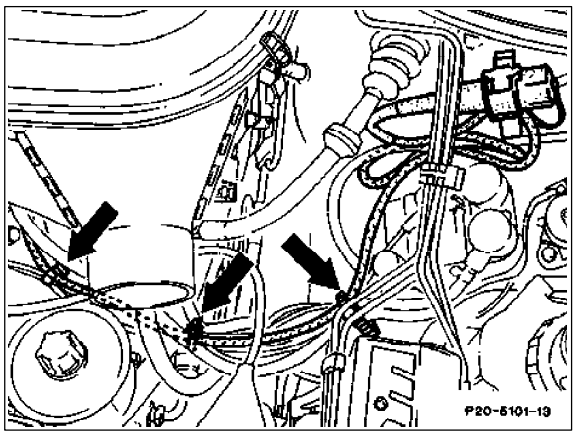

7 Use sheet-metal screws (14) to attach spring clamp (13) and cap (12) to the left-side firewall (see diagram). Use the socket which is already present in the firewall and drill a second hole with a 3 mm diameter.

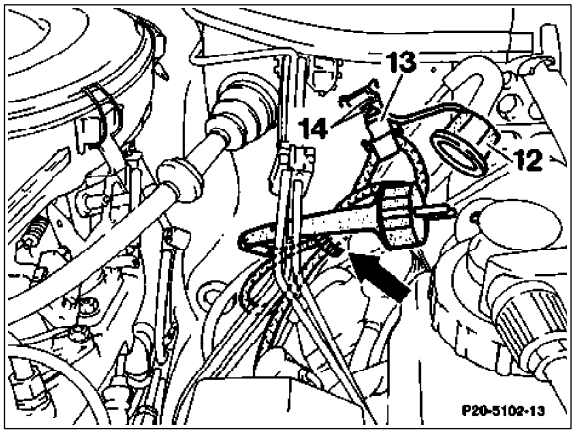

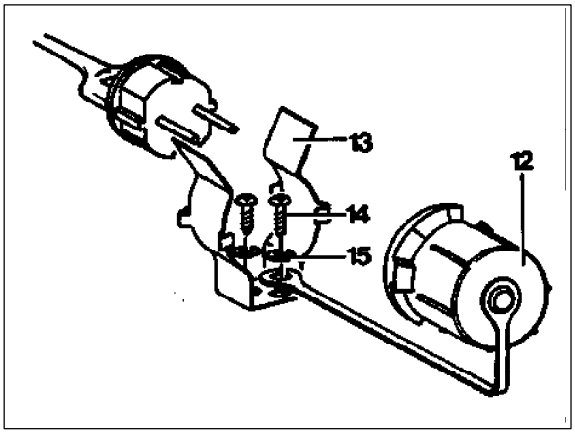

Diagram

12 Cap
13 Spring clamp
14 Screw (B3.9 x 9.5)
15 Washer (A4.3)

8 Reconnect the battery ground cable.

Copyright DaimlerChrysler AG 18.12.2002 CD-Ausgabe G/05/02 Will not be recorded by Modification services

9 Refill the engine cooling system
(RM 20-010).

10 Check the cooling system for leaks
(RM 20-017). Special tool 124 589 15 21 00.

11 Install lower engine compartment insulation panel
(RM 01-006).

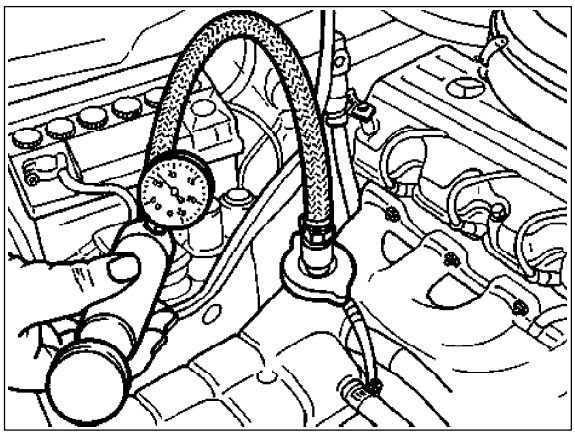

b) Model 124.034 (119.975 engine), 124.036 (119.974 engine)

1 Disconnect the ground cable from the battery.

2 Remove the lower engine-compartment
insulation panels.

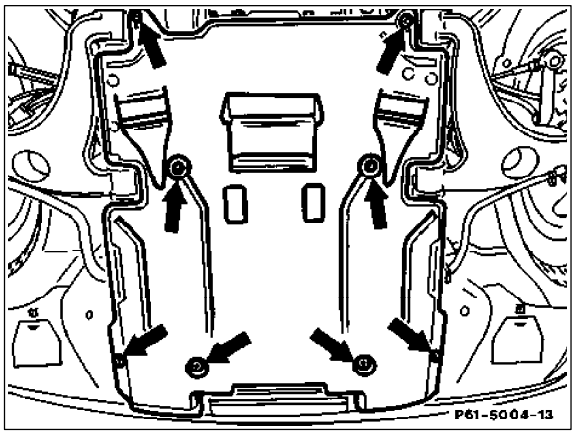

3 Drain all coolant from engine (RA 20-010).

4 Unscrew the threaded plug (b) from the left side
of the engine block.
Special tool 119 589 00 09 00.

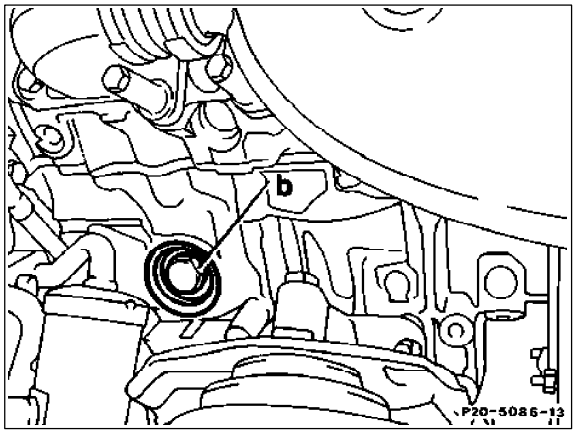

5 Place O-ring on the coolant Pre-heater and
thread heater into the engine block.
Special tool 119 589 00 03 00.
Tightening
tor
q
ue: 70 Nm.

Copyright DaimlerChrysler AG 18.12.2002 CD-Ausgabe G/05/02 Will not be recorded by Modification services

6 Route the electrical lead to the coolant Pre-heater toward the front, attaching it to the coolant pipe with cable straps (arrows).

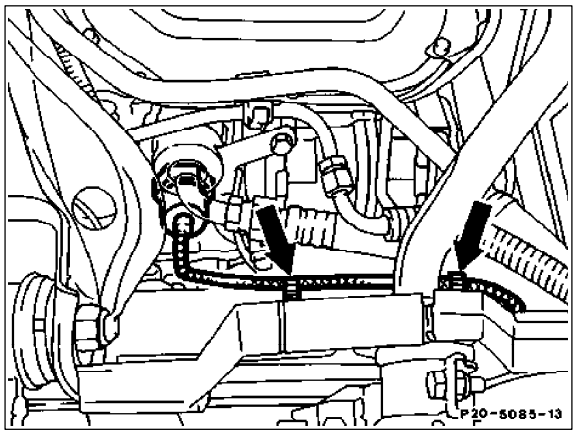

7 Continue by attaching the electrical lead to the oil cooler line with clamp (01). Then run the wire beneath the line to the receiver/drier (AC) before running the wire upward at the left wheelhousing; attach with cable straps.

M
Route electrical leads
so as to maintain the
ma
x
imum possible distance between
wiring and sources of heat
and abrasion such
as drive belts
and the
e
x
haust manifold.

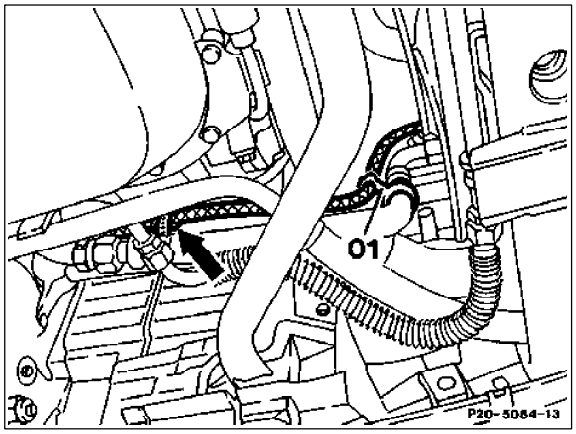

8 Remove the left-side air
-intake hose (1).
E
x
tract the air-intake shroud (2) behind the left headlight upward and out.

9 Remove the left-side headlight.

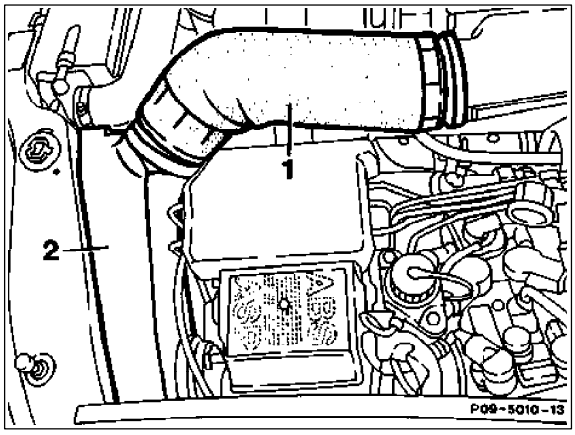

Copyright DaimlerChrysler AG 18.12.2002 CD-Ausgabe G/05/02 Will not be recorded by Modification services

10 Remove the shroud (3) behind the left-side headlight by unscrewing the four bolts (arrows). Remove the hood-release cable from the clip (4).

11 Pull the electrical wires for the headlights and their rubber grommets toward the rear to remove. Swivel the shroud (3) toward the front.

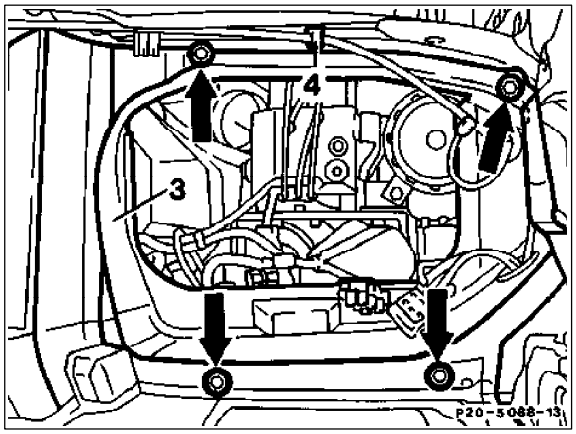

12 Route the electrical lead along the wiring harness at the left-side wheelhousing (below the headlight housing) and attach at the factory-installed cable straps (arrows).

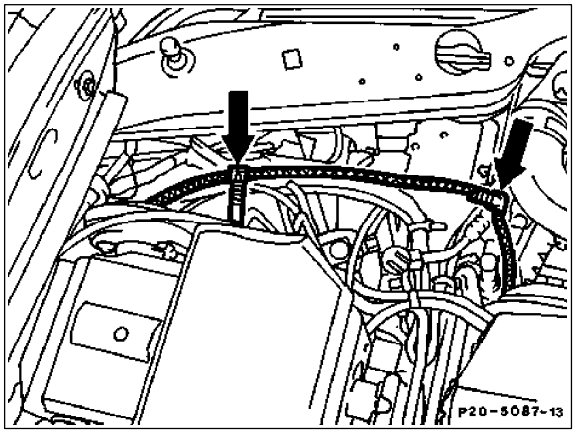

13 Attach the spring clamp (13) and the cap (12) for the plug to the shop-made bracket (11).

11 Bracket (shop-made)
12 Cap
13 Clamp
14 Screw (B3, 9x9.5)
15 Washer (A4, 3)

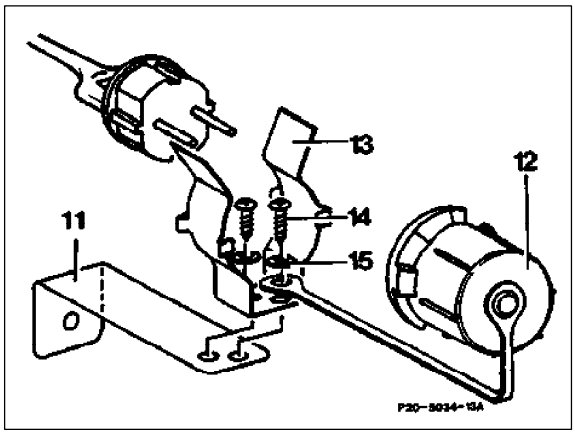

14 Bolt the bracket (shop-made) with plastic nut for mounting the switchover valve to the left side off the firewall.

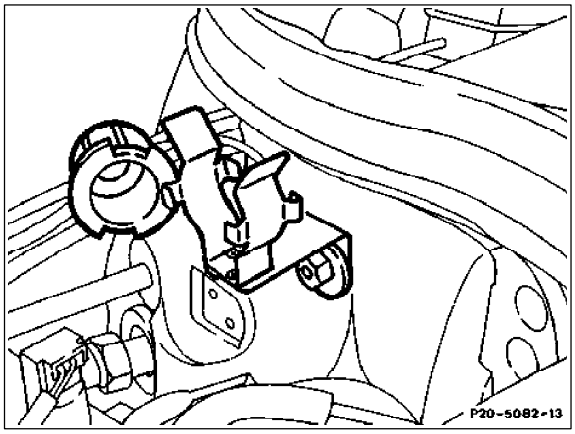

Copyright DaimlerChrysler AG 18.12.2002 CD-Ausgabe G/05/02 Will not be recorded by Modification services

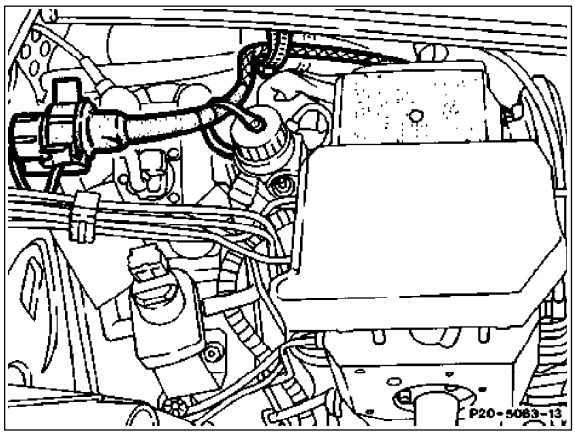

15 Install shroud (3), air-intake shroud (2), air-intake hose (1) and left headlight.

16 Reconnect the battery ground cable to the battery.

17 Refill system with coolant (RM 20-017).

18 Check cooling system for leaks
(RM 20-017), Special tool 124 589 15 21 00.

19 Install lower engine-compartment encapsulation panel.

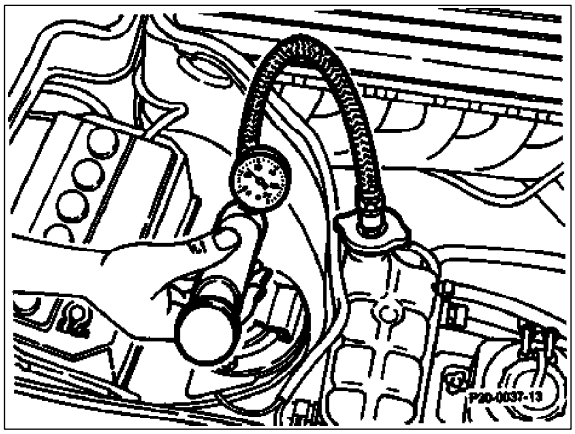

c) Model 124.120/180 (engine 601.91), 124.125/127/185 (engine 602.91), 124.13/190 (engine 603.91), 124.330 (603.913 engine)

1 Disconnect the ground cable from the battery.
2 Remove the lower engine-compartment encapsulation panel (RM 01-006).

3 Completely drain coolant from engine
(RM 20-010).

4 Unscrew the threaded plug (b) from the right side of the engine block.
Special tool 119 589 00 09 00.

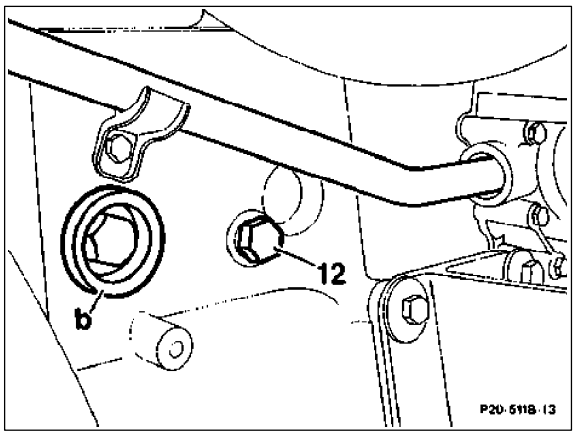

Engine 601

12 Hex. bolt

Copyright DaimlerChrysler AG 18.12.2002 CD-Ausgabe G/05/02 Will not be recorded by Modification services

Engine 602/603

12a Drain plugs

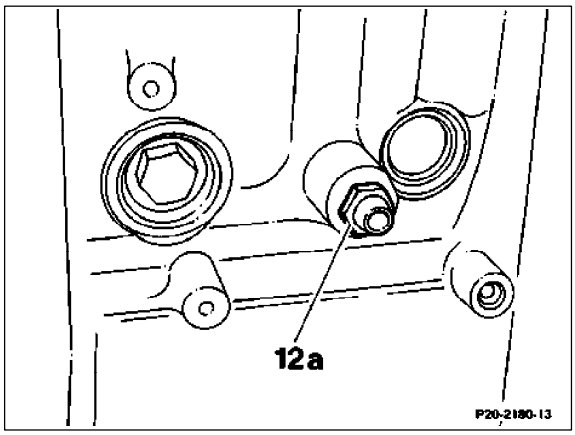

5 Fit the O-ring and screw the coolant Pre-heater unit into the engine block.
Tightening
tor
q
ue : 70 Nm.

6 Route the electrical lead for the coolant Pre-heater along the right side of the engine block and to the attachment point at the front.

M

Route lead well away from all potential sources of chafing and abrasion.

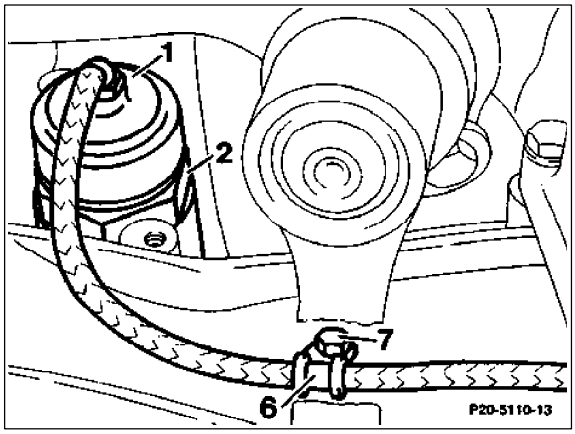

1 Engine block heater
2 O-ring
6 Clamp
7 Combination bolt with Allen fitting (M6x22)

7 Continue by using a clamp to attach the lead to the engine mount. Clamp the wire to the alternator bracket and then connect it to the main alternator harness with three cable straps (arrows). Run the wire to the right side member and attach it with three cable straps (arrows) using the holes provided at the factory.

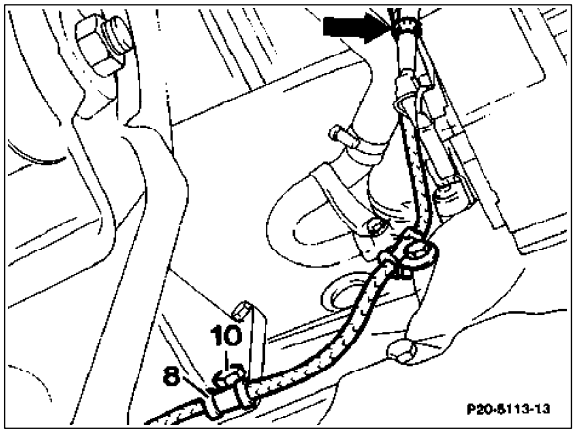

8 Clamp
10 Combination hex. bolt (M8x45)

Copyright DaimlerChrysler AG 18.12.2002 CD-Ausgabe G/05/02 Will not be recorded by Modification services

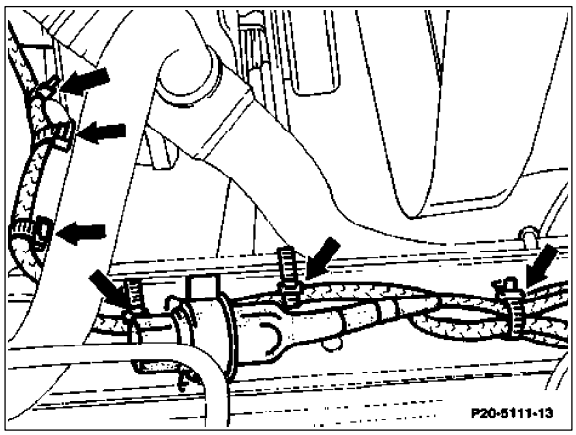

8 Drill two holes, dia. 3mm, in the right side member for attaching the spring clamp (13) and the cap (12) with two sheet-metal screws (14) (see diagram).

M

Coat the holes with z inc paint.

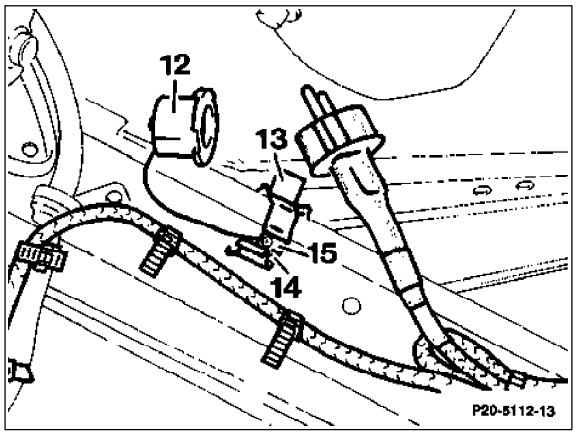

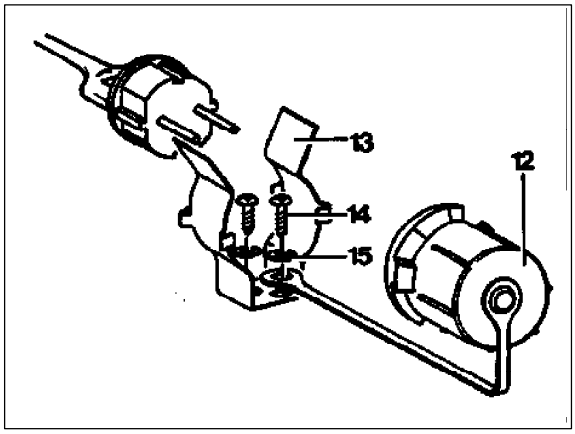

Mounting diagram

12 Cap
13 Spring clamp
14 Screw (B3, 9x9.5)
15 Washer (A4, 3)

9 Reconnect the ground cable to the battery.

10 Refill system with coolant (RM 20-010).

Copyright DaimlerChrysler AG 18.12.2002 CD-Ausgabe G/05/02 Will not be recorded by Modification services

11 Check cooling system for leaks
(RM 20-017).
Special tool 124 589 15 21 00.

12 Install lower engine-compartment encapsulation panel (RM01-006).

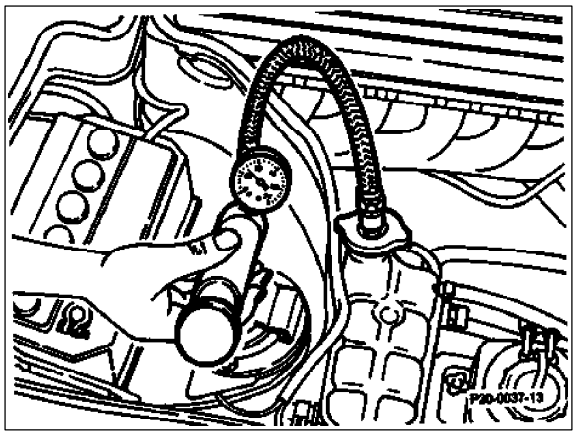

d) Model 124.128/188 (engine 602.96), 124.133/193 (engine 603.96), 124.333/393 (engine 603.96)

1 Disconnect the ground cable from the battery.

2 Remove the lower engine-compartment encapsulation panel (RM 01-006).

3 Completely drain coolant from engine (RM 20-010).

4 Unscrew the threaded plug (b) from the right side of the engine block.
Special tool 119 589 00 09 00.

5 Fit the O-ring and screw the coolant Pre-heater unit into the engine block.
Tightening
tor
q
ue: 70 Nm.

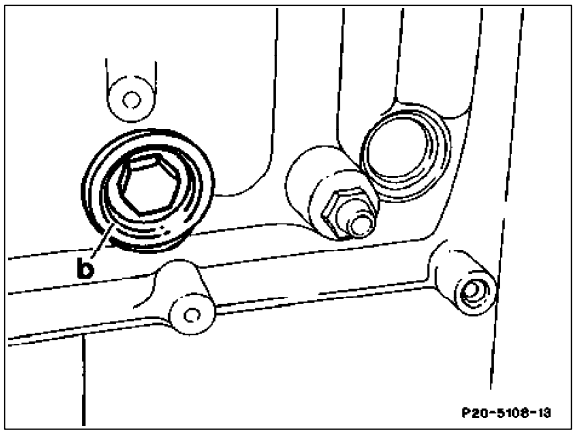

Copyright DaimlerChrysler AG 18.12.2002 CD-Ausgabe G/05/02 Will not be recorded by Modification services

6 Use two
he
x
. combination bolts and washers
(M6
x
15) (3) to attach the heat shield (4) above the block heater (1).

7 Route the electrical lead for the block heater down the right side of the block and secure it in place.

M

Route lead well away from all potential sources of chafing and abrasion.

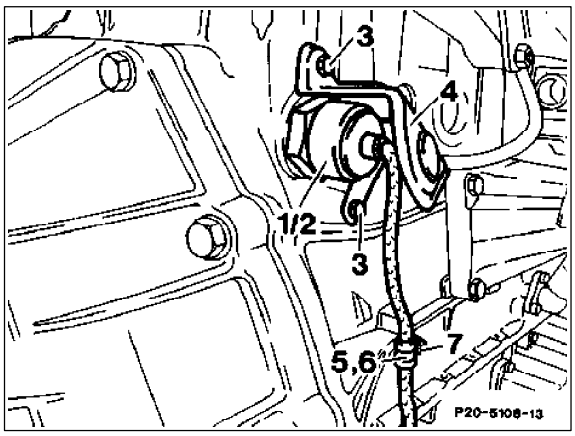

1 Engine block heater
2 O-ring
3 Hex. combination bolt and washer (M6x15)
4 Heat shield
5 Washer A8.4 (3 mm)
6 Clamp
7 Combination Allen bolt and washer (M6x22)

8 Continue by running the lead along the heater core return line (9) below the engine to the left side of the vehicle. Secure the lead with cable straps.

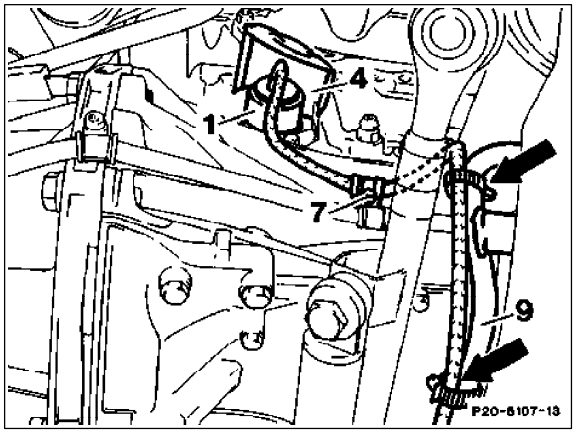

Right side of engine block

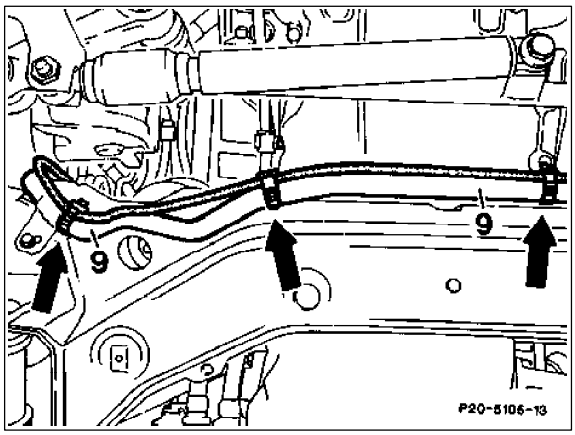

Lower right front of engine block

Copyright DaimlerChrysler AG 18.12.2002 CD-Ausgabe G/05/02 Will not be recorded by Modification services

9 Run the lead to the left side of the firewall and attach it with cable straps (arrows).

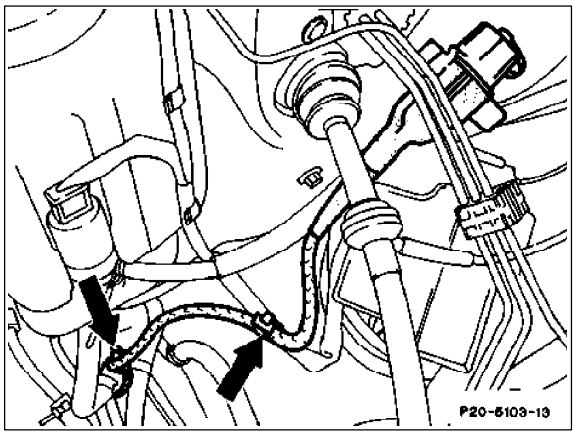

10 Drill two holes, dia. 3 mm, in the left side of the firewall as attachment points for the spring clamp (13) and the cap (12) with two sheet-metal screws (14) (see diagram).

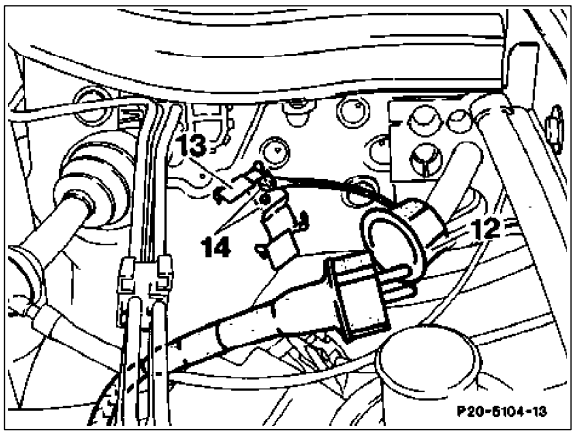

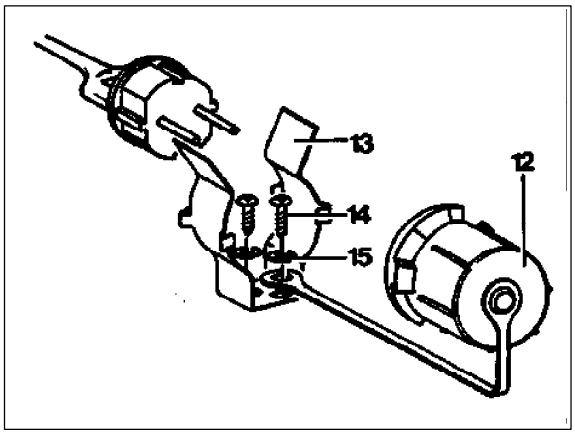

Mounting diagram

12 Cap
13 Spring clamp
14 Screw (BZ 4.2 x 16)
15 Washer (A4,3)

11 Reconnect the ground cable to the battery.

12 Refill the system with coolant (RM 20-010).

Copyright DaimlerChrysler AG 18.12.2002 CD-Ausgabe G/05/02 Will not be recorded by Modification services

13 Check cooling system for leaks
(RM 20-017).
Special tool 124 589 15 21 00.

14 Install lower engine-compartment encapsulation panel (RM 01-006).

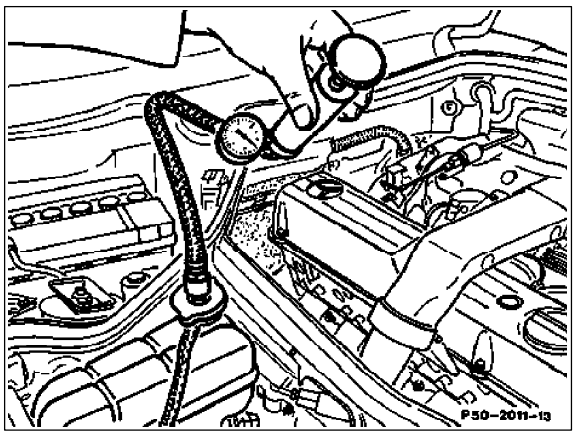

e) Models 124.007/026/027 (engine 103.94), 124.226 (engine 103.94)
124.030/050/090 (engine 103.98), 124.230/290 (engine 103.98)
124.008/028/029/088 (engine 104.942)
124.031/051/091 (engine 104.98), 124.061 (engine 104.98)
124.032/052/066 (engine 104.992)

1 Disconnect the ground cable from the battery.

2 Remove the lower engine-compartment encapsulation panel (RM 01-006).

3 Completely drain coolant from engine
(RM 20-010).

4 Unscrew the threaded plug (b) from the right side of the engine block.
Special tool 119 589 00 09 00.

5 Fit the O-ring and screw the coolant pre- heater unit into the engine block.
Tightening torque : 70 Nm.

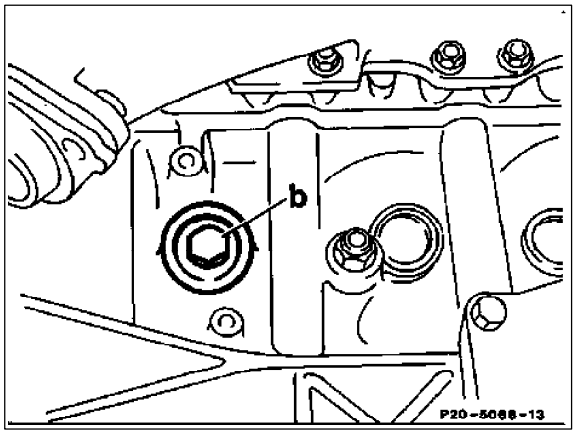

Copyright DaimlerChrysler AG 18.12.2002 CD-Ausgabe G/05/02 Will not be recorded by Modification services

6 Use two
he
x
. bolts
(M6
x
15) with washers to attach the heat shield (6) above the block heater (1).

7 Run the electrical lead from the coolant Pre-heater along the right side of the engine block and toward the front. Route the lead over the attachment point on the engine subframe and attach with clamps. The attachment components
must be mounted on
the engine subframe
in the following
se
q
uence:
7 Washer A8.4 (3 mm) between engine subframe and clamp
8 Clamp
9 Washer A8.4 (1.5 mm)
10
He
x
. bolt
(M
8
x
40)

M

Route electrical leads
so as to maintain the
ma
x
imum possible distance between
wiring and the
e
x
haust manifold. Avoid installing near potential sources of abrasion.

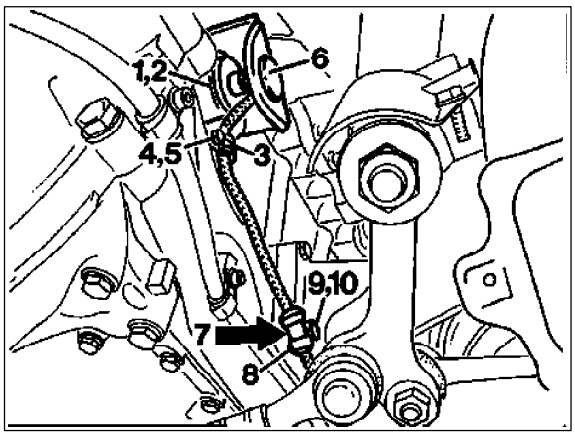

Mouting on engine:
1 Engine block heater
2 O-ring
3 Clamp
4 Clamp (A6.4)
5 Hex. bolt (M6x15)
6 Heat shield
7 Washer A8.4 (3mm)
8 Clamp
9 Washer A8.4 (1.5mm)
10 Hex. bolt (M8x40)

Copyright DaimlerChrysler AG 18.12.2002 CD-Ausgabe G/05/02 Will not be recorded by Modification services

8 Continue by using clamps to attach the lead to the engine block and to the alternator bracket, then connect it to the main alternator harness with three cable straps (arrows). Run the wire to the right side member.

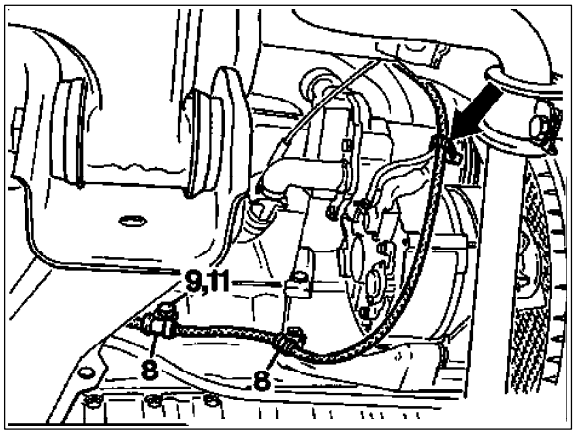

Mouting on engine block and alternator bracket:
8 Clamp
9 Washer A8.4 (1.5 mm)
11 Hex. bolt (M8x20)

M

Ensure that the wire is routed well away from drive belts and pulleys.

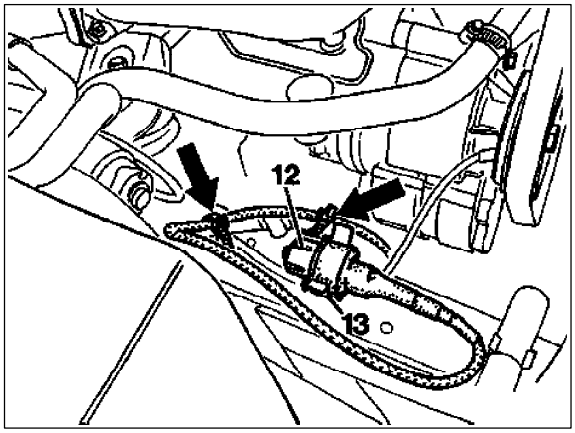

9 Drill two holes, dia. 3 mm, and attach the spring clamp (13) and cap (12).

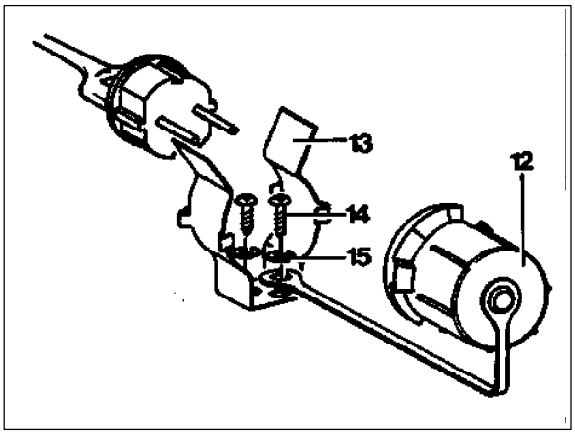

Mounting diagram:
12 Cap
13 Spring clamp
14 Screw (B3.9x9.5)
15 Washer (A 4.3)

M

Coat holes
with
z
inc paint.

10 Reconnect the ground cable to the battery.

11 Refill the system with coolant (RM20-010).

Copyright DaimlerChrysler AG 18.12.2002 CD-Ausgabe G/05/02 Will not be recorded by Modification services

12 Check cooling system for leaks (RM20-017).
Special tool 124 589 15 21 00.

13 Install lower engine-compartment encapsulation panel.

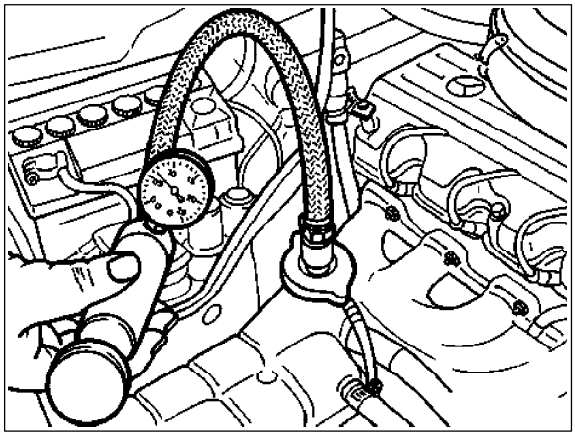

f) Model 124.019/040/079 with 111.940 engine (except vehicles with Tempomat)
Model 124.022/042/082 with 111.960 engine (except vehicles with Tempomat)

1 Disconnect the ground cable from the battery.

2 Remove lower engine-compartment encapsulation panel (Maintenance manual).

3 Completely drain coolant from engine (RM 20-1142).

4 Remove the starter (RM 15-7100).

5 Unscrew the threaded plug (1) from the left side of the engine block,
Special tool 119 589 00 09 00.

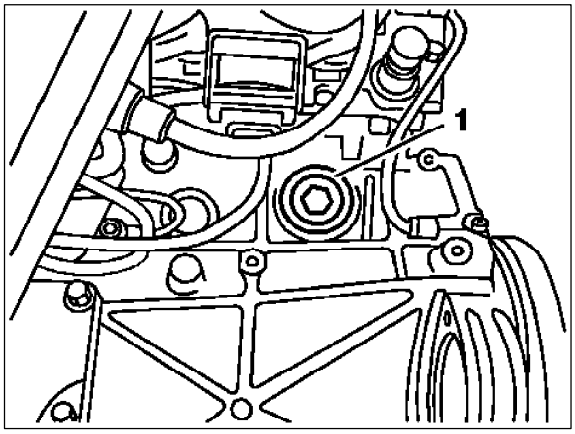

Copyright DaimlerChrysler AG 18.12.2002 CD-Ausgabe G/05/02 Will not be recorded by Modification services

6 Fit the O-ring and screw the coolant Pre-heater unit into the engine block.
Tightening
tor
q
ue : **70 Nm**.

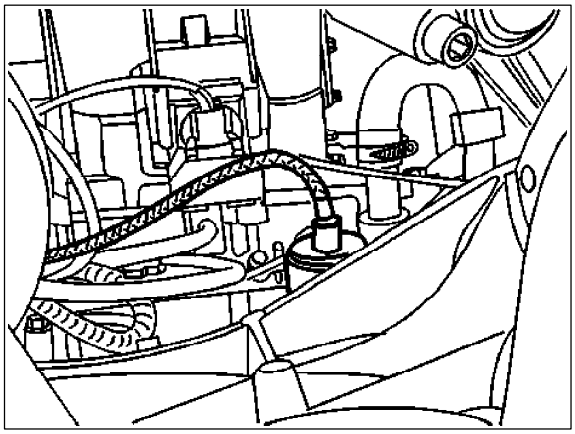

7 Route the electrical lead for the coolant pre-heater along the engine's wiring harness to the left side member and attach.

M

Route wire well away from potential sources of chafing and abrasion.

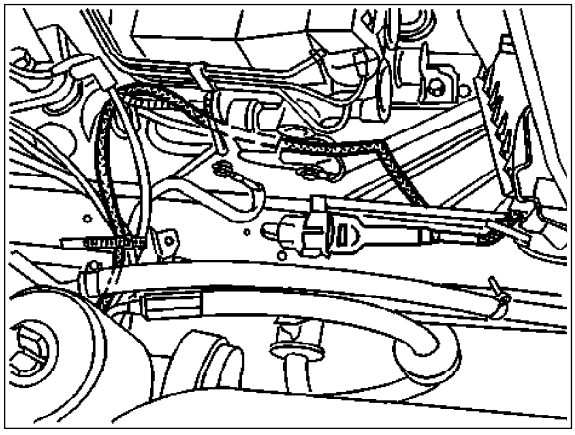

8 Use sheet-metal screws (14) to attach the spring clamp (13) and cap (12) to the left side member (see mounting diagram).
Use the factory-drilled hole in the side member and drill a second hole with a 3 mm dia.

M

Be certain to coat
the sockets
with
z
inc paint.

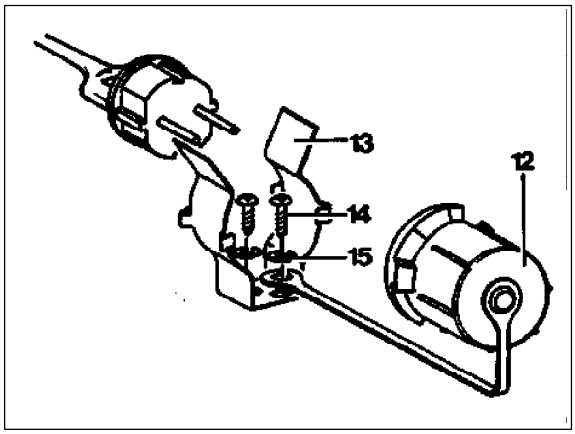

Mounting diagram

12 Cap	14 Screw (BZ 4.2x16)
13 Spring clamp	15 Washer (A4.3)

9 Install the wire clamp (000 995 80 44) behind the plug on the left side member.

10 Suspend the remaining electrical
wire from the coolant
Pre-heater in the
wire clamp, coiling
any
e
x
cess in loops.

M

Ensure that the wire is routed well away from drive belts and pulleys.

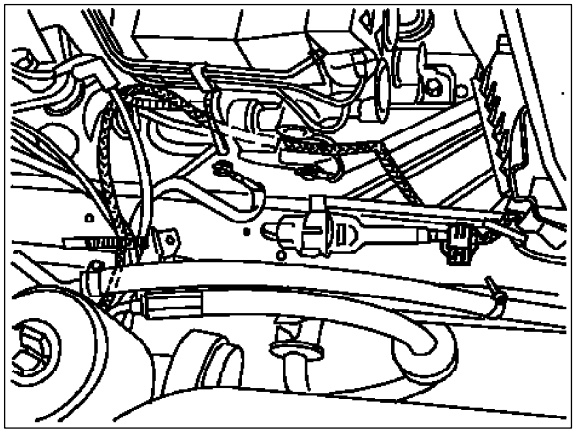

Copyright DaimlerChrysler AG 18.12.2002 CD-Ausgabe G/05/02 Will not be recorded by Modification services

11 Refill the system with coolant (RM 20-1142).

12 Check the cooling system for leaks (RM 20-1010).
Special tool 124 589 15 21 00.

13 Install starter (RM-7100).

14 Install lower engine-compartment encapsulation panel (WHB).

15 Connect the battery ground cable.

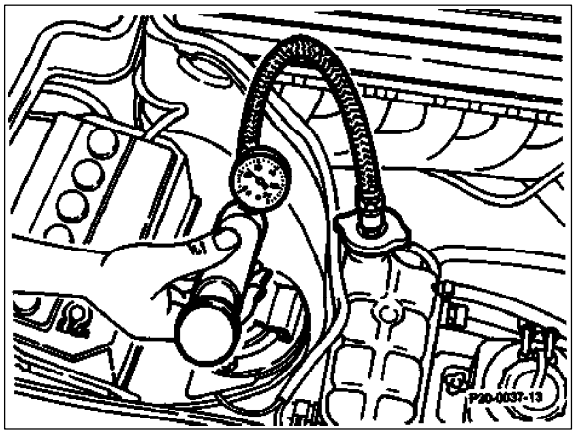

B. Parts ordering note

Consult the parts documantation for a listing of the components required for installation:

Number	Description	Group/Option
1	Coolant Pre-heater kit	SA 12.228

Additional requirements according to model:

Model 124.034/036

Number	Description	Part no.
1	Collar clamp (dia. 8 mm)	115 995 03 65
1	Collar clamp (dia. 20 mm)	110 995 01 65

Models 124.020/125/127/130/180/190/330

Number	Description	Part no.
1	Clamp	916016 006202
1	Combination Allen	000912 006022
1	bolt and washer	000931 008244
3	M6 x 22 He x . bolt M8 x 45 Cable straps	114 997 01 90

Models 124.128/133/188/193/333/393

Copyright DaimlerChrysler AG 18.12.2002 CD-Ausgabe G/05/02 Will not be recorded by Modification services

Number	Description	Part no.
1	Heat shield	602 200 00 94
1	Combination Allen	000912 006022
2	bolt and washer	007981 004331
2	M6 x 22 Fillister-head philips screw BZ 4.2 x 16 He x . combination bolt and washer M6 x 16	914008 006003

Models 124.007/008/026/027/028/029/030/031/032/050/051/052/061/066/088/090/091/226/230/290

Number	Description	Part no.
1	Heat shield	602 200 00 94
2	Clamp	916016 006202
1	Washer B8	000137 08204
2	Washer B6	000137 006204
1	He	000933 008045
2	x . bolt M8 x 220 He x . bolt M6 x 15	000933 006102

Models 124.019/022/040/042/079/082

Number	Description	Part no.
1	Cable clamp	000 995 80 44

Copyright DaimlerChrysler AG 18.12.2002 CD-Ausgabe G/05/02 Will not be recorded by Modification services

20–0020 Switching points in the cooling system

Data

Models	107	124	126	129	201
Coolant thermostat at coolant temperature °C					
start of opening	85 – 89	85 – 89	85 – 89	85 – 89	85 – 89
fully open	102	102	102	102	102
Viscous fan coupling	103 200 02 22	103 200 04 22[1]	103 200 03 22	103 200 06 22	103 200 05 22
cut-in temperature °C	96 – 104	96 – 104	96 – 104	92 – 100	92 – 100
safety shut-off at engine speed	4500	4500	4500	4500	4500
fan speed in rpm	3420	3250	3420	3250	3580
Electric auxiliary fan					
1st stage on/off [2]	16/11	16/11	16/11	– [4]	16/11
2nd stage on/off [3]	107/100	107/100	107/100	107/100	105/100
Air conditioner at coolant temperature °C					
start of pulse	–	116 – 118	116 – 118	116 – 118	116.– 118
emergency shut-off	–	119 – 121	119 – 121	119 – 121	112 – 118 119 – 121 [5]
Cap opens at bar pressure	1.3 – 1.5	1.3 – 1.5	1.3 – 1.5	1.3 – 1.5	1.3 – 1.5
coolant temperature °C	130	130	130	130	130

[1] Engine 103.980 viscous fan coupling 103 200 02 22

[2] At refrigerant pressure in bar

[3] At coolant temperature in °C

[4] 2nd version 20/15 bar

[5] only (USA)

Diagram

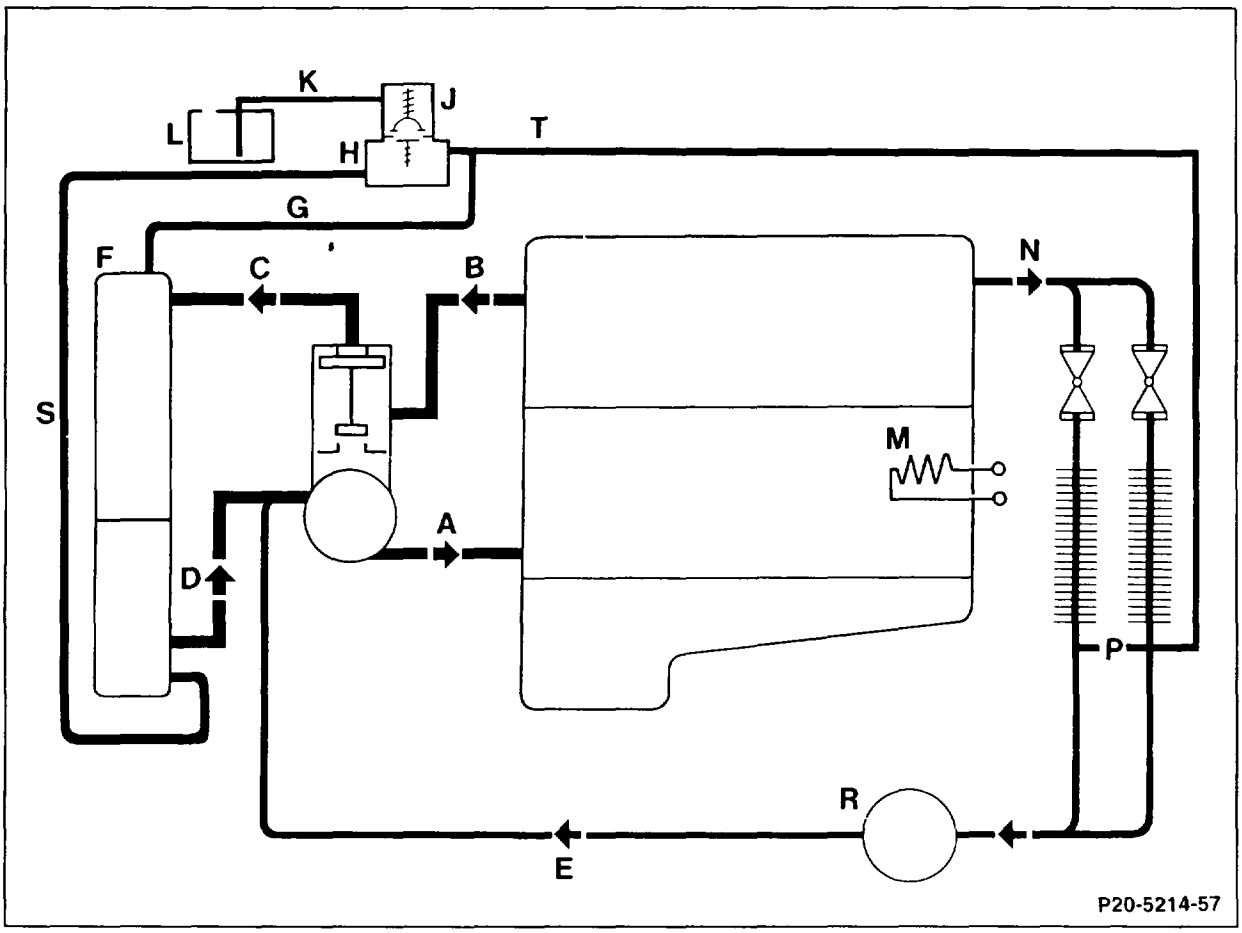

A	From coolant pump to crankcase	K	Drain hose
B	From cylinder head to thermostat	L	Overflow tank (except models 107, 126)
C	From thermostat to radiator	M	Coolant preheater
D	From radiator to coolant pump	N	From cylinder head to heat exchanger
E	From circulation pump to coolant pump	P	Heat exchanger
F	Radiator	R	Electric circulation pump
G	Vent hose	S	Coolant filling hose
H	Expansion tank with coolant level indicator	T	Vent line from heat exchanger (P) to expansion tank (H). Installed in model 129 as of 11/1990 as of vehicle ident end no. 022 921.
J	Pressure cap		

A Coolant pump "bypass mode":

Main valve (15) closed. The coolant circulate from the cylinder head through the coolant pump to the crankcase.

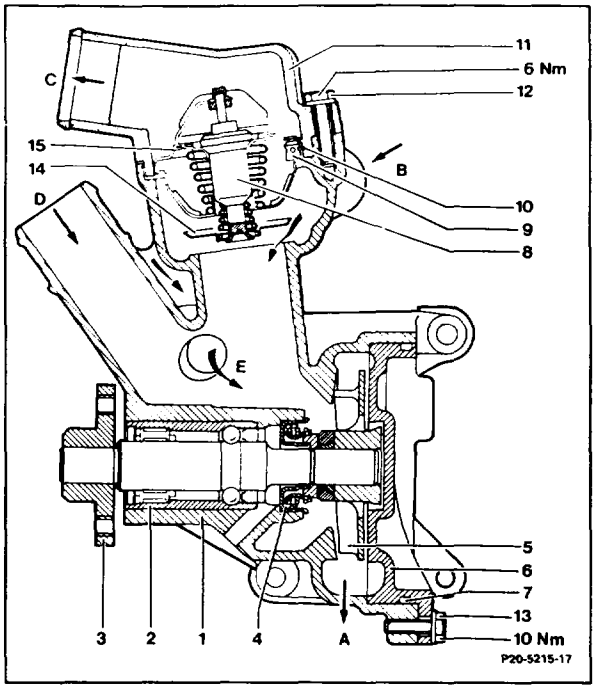

A	To crankcase
B	From cylinder head
C	To top of radiator
D	From bottom of radiator
E	From heater
1	Pump housing
2	Pump shaft
3	Flange
4	Cassette-type seal
5	Impeller
6	Spiral housing
7	O-ring
8	Thermostat
9	Ball valve
10	O-ring
11	Cover
12	Bolt + washer
13	Bolt + washer
14	Bypass valve
15	Main valve

B Coolant pump "mixed mode":

The main valve (15) is partially open. Coolant circulates partially through the radiator to the crankcase.

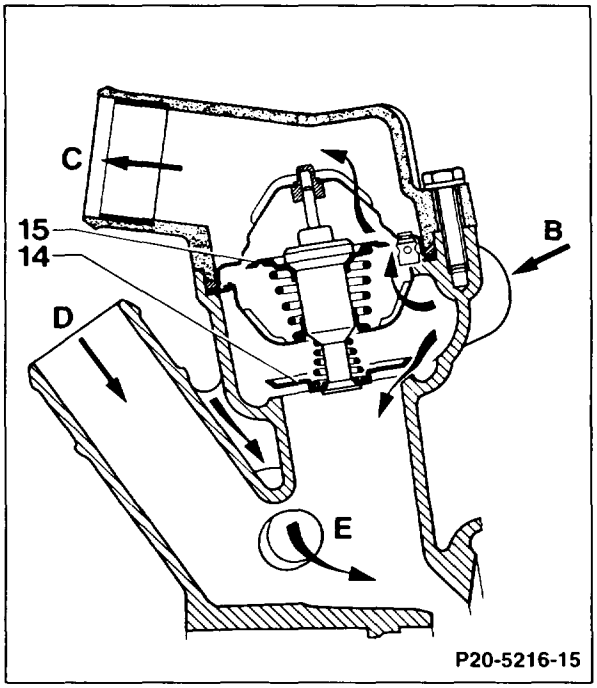

B	From cylinder head
C	To top of radiator
D	From bottom of radiator
E	From heater
14	Bypass valve
15	Main valve

C Coolant pump "cooling mode":

Main valve (15) fully open, bypass valve (14) closed.

The coolant flows from the cylinder head through the radiator to the crankcase.

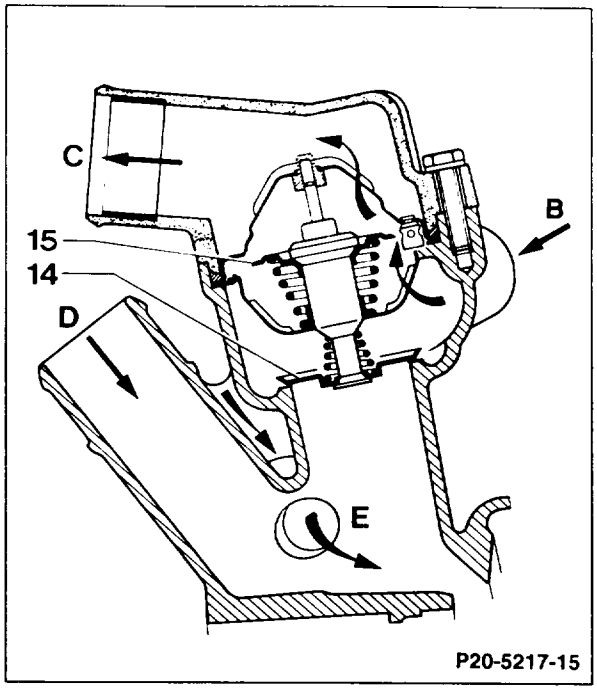

B	From cylinder head
C	To top of radiator
D	From bottom of radiator
E	From heater
14	Bypass valve
15	Main valve

20–0100 Draining, pouring in coolant – Antifreeze protection table

Preceding work:
Warning instructions when hood open (01-0085).
Bottom engine compartment panel removed (Maintenance Manual 2, Op. no. 6190).

Operation no. of operation texts and work units or standard texts and flat rates
20–1142 – 20–1151

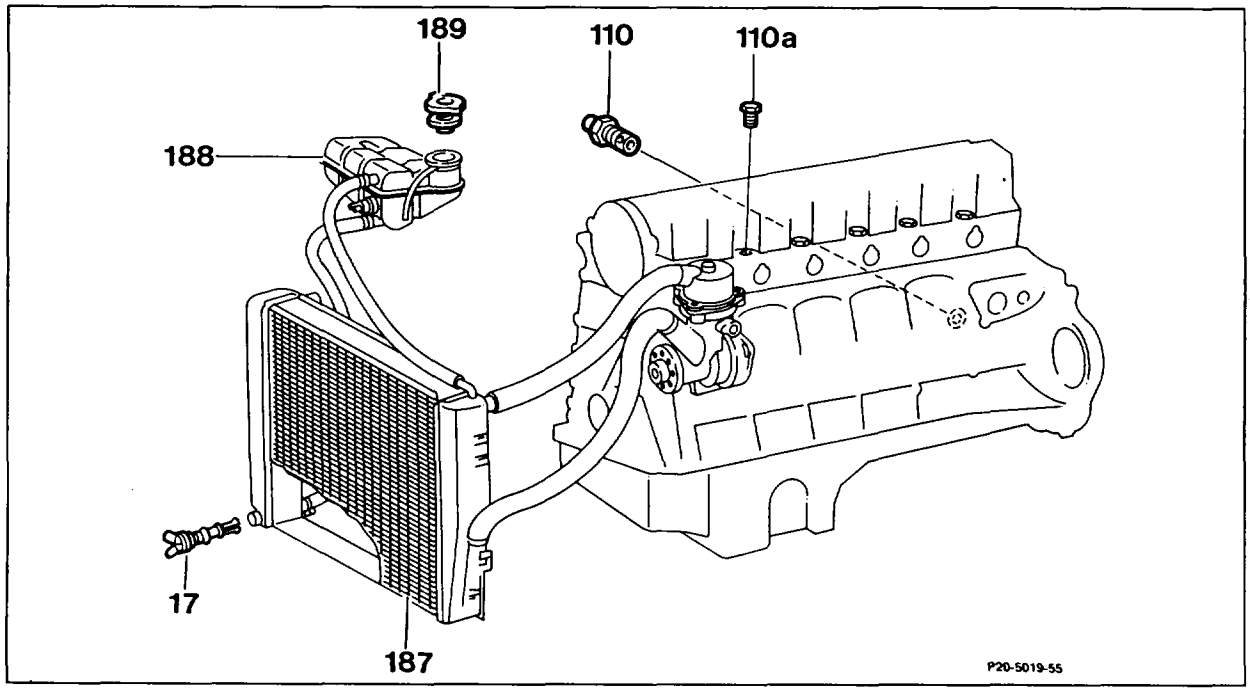

	⚠ Do not open cap unless coolant temperature is below 90 °C.
Pressure cap (189)	take off, fit on (step 1).
Drain plug (17)	fit on hose, open and close. 6 – 10 and 1.5 – 2 Nm. Drain coolant from radiator (187) (steps 2, 4).
Drain plug (110)	fit on hose, open and close, 30 Nm. Drain coolant from crankcase (steps 3, 4).
Coolant	pour in until it flows out at front screw plug (110a), screw in front plug and pour in up to marking on expansion tank (188) and bleed (steps 5 – 7).
Engine	run until coolant thermostat opens (step 7).
Coolant level	check (step 7).
Cooling system	check for signs of leaks (20–0170).

Total capacities of cooling system with heater and mixing ratio of anticorrosion/antifreeze agent[1]) and water[2]) in liters

Model	Total capacities of cooling system with heater	Mixing ratio of anticorrosion/antifreeze agent and water for antifreeze protection down to	
		–37 °C	–45 °C
107/126	8.00	4.00/4.00	4.40/3.60
124/201	9.00	4.50/4.50	4.95/4.05
	9.50[3])	4.75/4.75	5.25/4.25
129	11.50	5.75/5.75	6.3/5.2

[1]) Refer to Service Product Specifications Sheet 325.1 and 325.2
[2]) Refer to Service Product Specifications Sheet 310
[3]) With air conditioning/automatic climate control

Tightening torques in Nm

Radiator drain plug, model 107 (heavy metal radiator)	6 – 10
Crankcase drain plug	30
Radiator drain plug, model 107 (light alloy radiator) 124, 126, 129, 201	1.5 – 2[1])

[1]) This torque can be applied with a washer or a coin.

Commercial tool

Antifreeze tester	eg.	Ph. Gather
Prestone-VV-Check (Union Carbide)		D–40822 Mettmann 2

Notes

Composition of coolant
50 % by vol. water (Service Product Specifications Sheet 310)
50 % by vol. anticorrosion/antifreeze agent (Service Product Specifications Sheet 310, 325.1 and 325.2).

Water

Use water which is clean and not too hard. These requirements are frequently, but not always, met by drinking water. The content of dissolved substances in the water may be the cause for the occurrence of corrosion. If in doubt, have the water analyzed.

Anticorrosion/antifreeze agent

The anticorrosion/antifreeze agent performs the following tasks:

- Provide adequate anticorrosion and cavitation protection for all components
- Provide antifreeze protection
- Increase the boiling point

Approximately 50 % by vol. anticorrosion/ antifreeze agent must be added to the water. This concentration offers antifreeze protection down to approximately –37 °C.
A higher concentration is not recommended even if ambient temperatures are lower.

More than 55 % by vol. anticorrosion/antifreeze agent reduces the antifreeze protection and impairs heat dissipation.

55 % by vol. anticorrosion/antifreeze agent offers antifreeze protection down to approx. –45 °C.

Anticorrosion/antifreeze agent increases the boiling point which is why the coolant does not evaporate so rapidly. The ejection of coolant is avoided at high coolant temperatures.

Use only approved anticorrosion/antifreeze agents (refer to Service Product Specifications Sheet 325.1 and 325.2).

Operational monitoring of coolant
Before the commencement of the cold season of the year, check the antifreeze protection of the coolant.
In countries with high ambient temperatures, check anticorrosion/antifreeze agent concentration once annually.

When topping up (after loss of coolant) it must be assured that there is a 50 % by vol. portion of anticorrosion/antifreeze agent in the coolant to provide antifreeze protection down to –37 °C.

The corrosion protection in the coolant decreases during engine operation. Such coolants have an extremely corrosive effect.
The maximum permissible life of the specified coolant in a car engine is **3 years.**
Before adding new coolant, flush the used coolant out of the cooling system.

Disposing of coolants
Pay attention to statutory regulations or local waste water requirements regarding disposal of coolant agents.

Draining, pouring in
⚠
Open pressure cap only if coolant temperature is below 90 °C.

1 To open expansion tank: first of all turn only as far as 1st detent to release system pressure, then turn on to 2nd detent and remove cap.

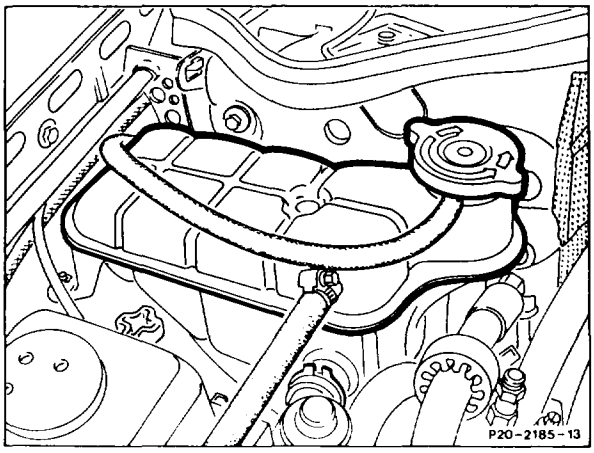

Model 129
A modified coolant expansion tank with improved ventilation has been installed on Model 129 since 08/89 with effect from Vehicle Ident End No. 001 950.

The previous expansion tank on cars manufactured prior to this date should be renewed if complaints are received (gurgling noises in heat exchanger). Part No. 129 500 03 49.

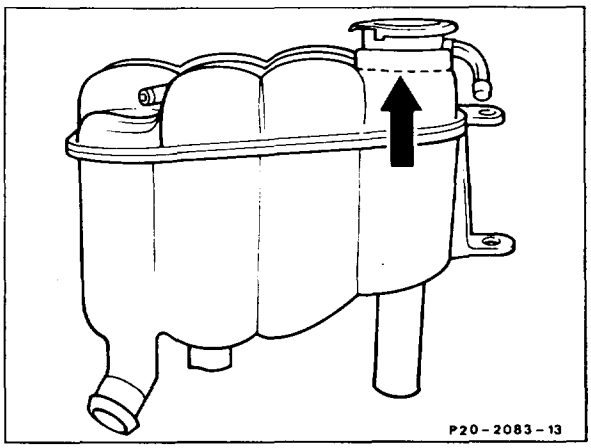

2 Drain coolant at radiator by connecting a hose (inner diameter 12 mm) to the connection (arrow) and unscrewing drain plug (17). Drain coolant (approx. 4 l).

Note
On Models 126 and 201 open the cap in the front bumper and slacken the drain plug (17).

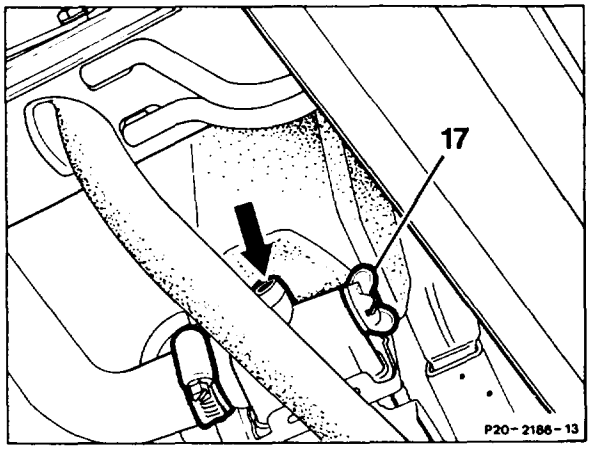

3 Drain coolant at crankcase by connecting a hose (arrow) (inner diameter 14 mm) to the drain plug (110) and slackening the plug. Drain coolant (approx. 4 l).

4 Tighten drain plugs for radiator and crankcase.
Pay attention to tightening torques.

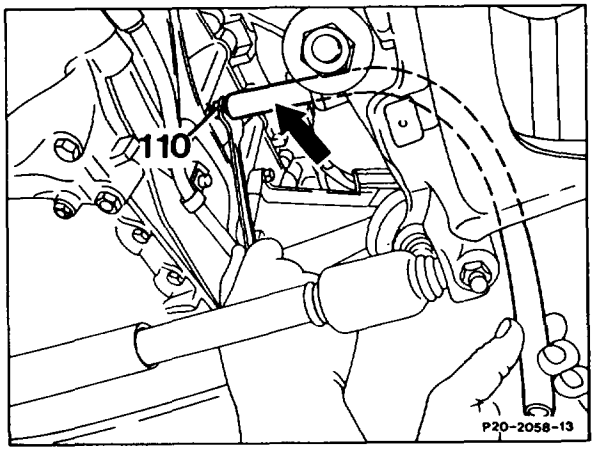

5 Pour in coolant.
Unscrew front plug (arrow) from the measuring sensor strip. Pour in coolant until it flows out at the tapped hole. Screw in plug and pour in remaining coolant.

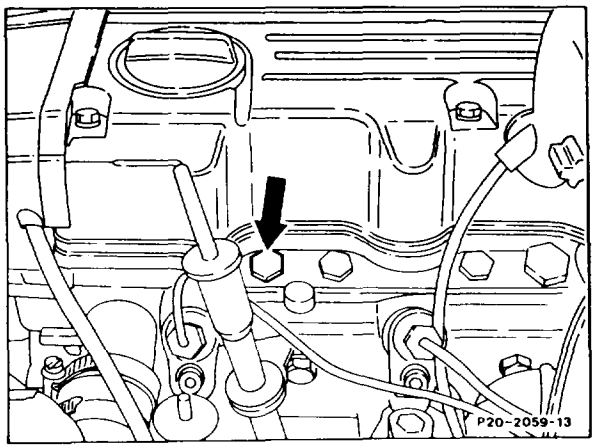

6 If car fitted with auxiliary heater:
Take off cap (635), unscrew bleeder screw (636) slightly until no more air flows out.

Note
Repeat bleeding operation several times.

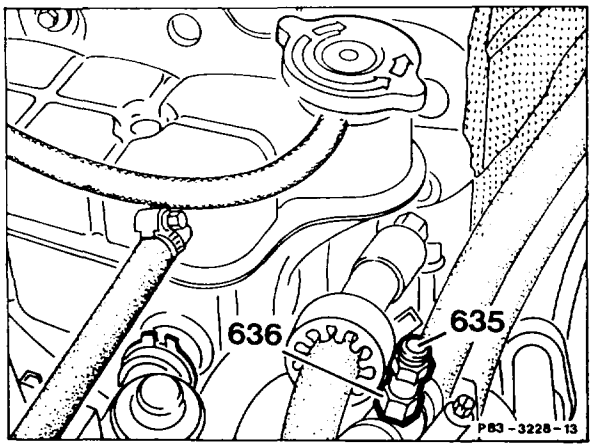

7 Switch on heater and warm up engine until the thermostat opens. Following this, top up coolant to the marking (arrow) on the expansion tank.

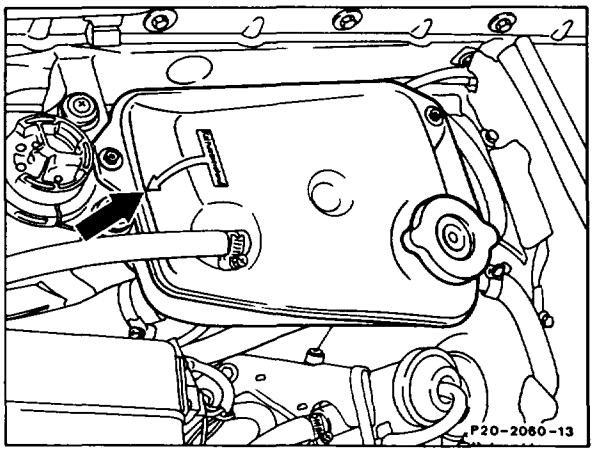

Model 129
The coolant should be filled into the expansion tank up to the brim (arrow).

Note
Close filler connection on expansion tank as soon as coolant temperature has reached approx. 60 – 70 °C.

8 Test cooling system for leaks (20-0170).

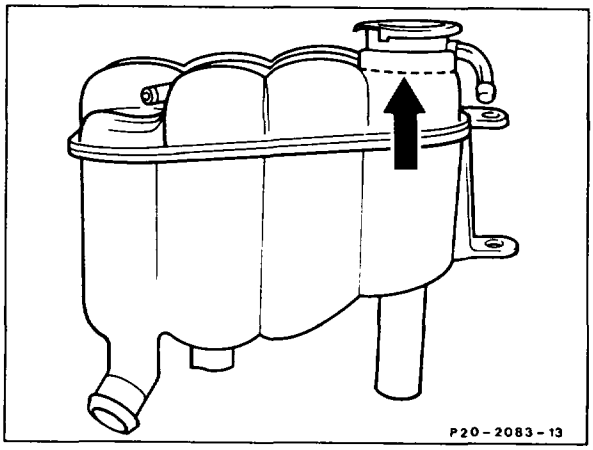

20–0160 Cleaning cooling and heating system

Preceding work:
Coolant drained (20-0100).
Cause of oil leak rectified

Operation no. of operation texts and work units or standard texts and flat rates

Heater or AC controls	set to "warm"
Cooling system	fill with a solution from a container (0.5 kg) of alkaline cleaner part no. 001 986 21 71 and clear water
Engine	warm up to operating temperature with flushing solution
Engine	run for about 5 minutes with flushing solution
Flushing solution	drain from crankcase and radiator (20-0100)
Heating system heat exchanger	thoroughly flush out through the feed pipe with reduced water pressure
Cooling and heating system	thoroughly flush out with clear water with engine running.
	⚠ Clear flushing is successful if no solvent residues are present in the cooling and heating system, ie. the flushing water which flows out must no longer foam.
Overflow tank	replace (20-4540)
Expansion tank	replace (20-4500) if discolored by oil on inside
Coolant and heating hoses	inspect for effects of oil; replace if necessary
Fresh coolant	pour in (20-0100)

20–0170 Testing cooling system for leaks

Operation no. of operation texts and work units or standard texts and flat rates
20–1010

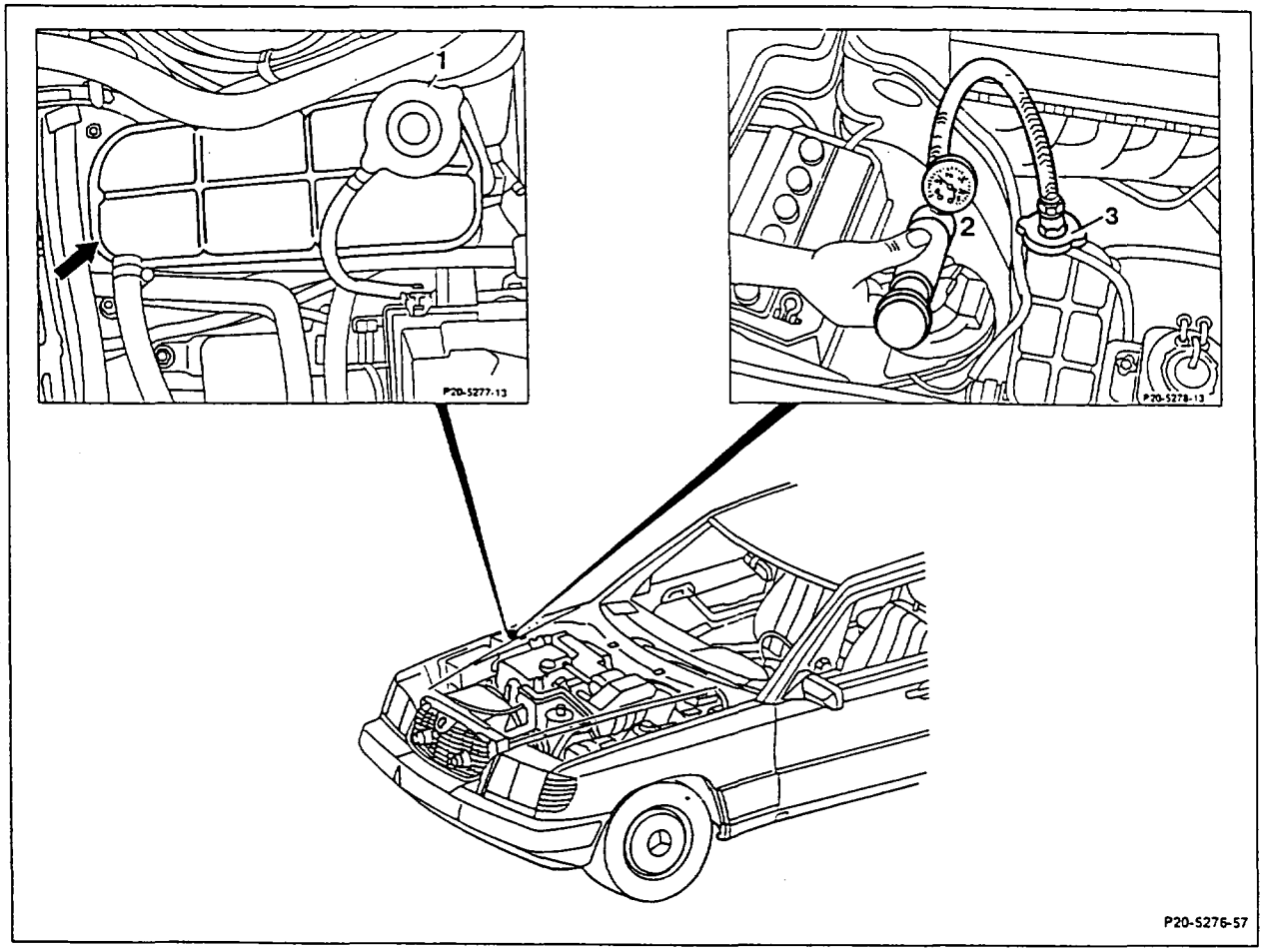

Pressure cap (1)	open in stages, close
	⚠ The pressure cap (1) should not be opened unless the coolant temperature is below 90 °C. If engine is hot, on no account remove the cap (1) before releasing the pressure in the cooling system. Risk of scalding!
Coolant level in expansion tank	check, top up if necessary (20-0100)
Connection cap (3) of tester (2)	lock at filler neck of coolant expansion tank. Special tool 124 589 15 21 00
Cooling system	pressurize with tester (2) (about 1.4 bar)

All connections of coolant and heating water hoses	check for loss of coolant and also examine exterior condition of coolant hoses and hose straps; replace in necessary or re-tighten hose straps.

Tightening torques in Nm (reference values) [1]

Hose clips up to Ø 27 mm (waf 6 mm)	2.5
Hose clips as of Ø 28 mm (waf 7 mm)	3.5

1) Threaded hose clips which are excessively tightened damage the hoses.

Special tool

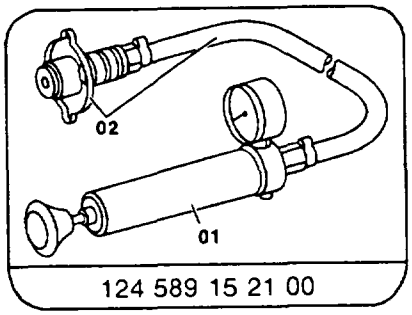

124 589 15 21 00

Commercially available tool

7 mm socket wrench hexagon on flexible shaft for hose straps with wormdrive	eg. Hazet, D–42853 Remscheid Order no. 426-7

20–1100 Removing and installing coolant thermostat

Preceding work:
Coolant drained (20–0100).

Operation no. of operation texts and work units or standard texts and flat rates
20–2460 – 20–2482

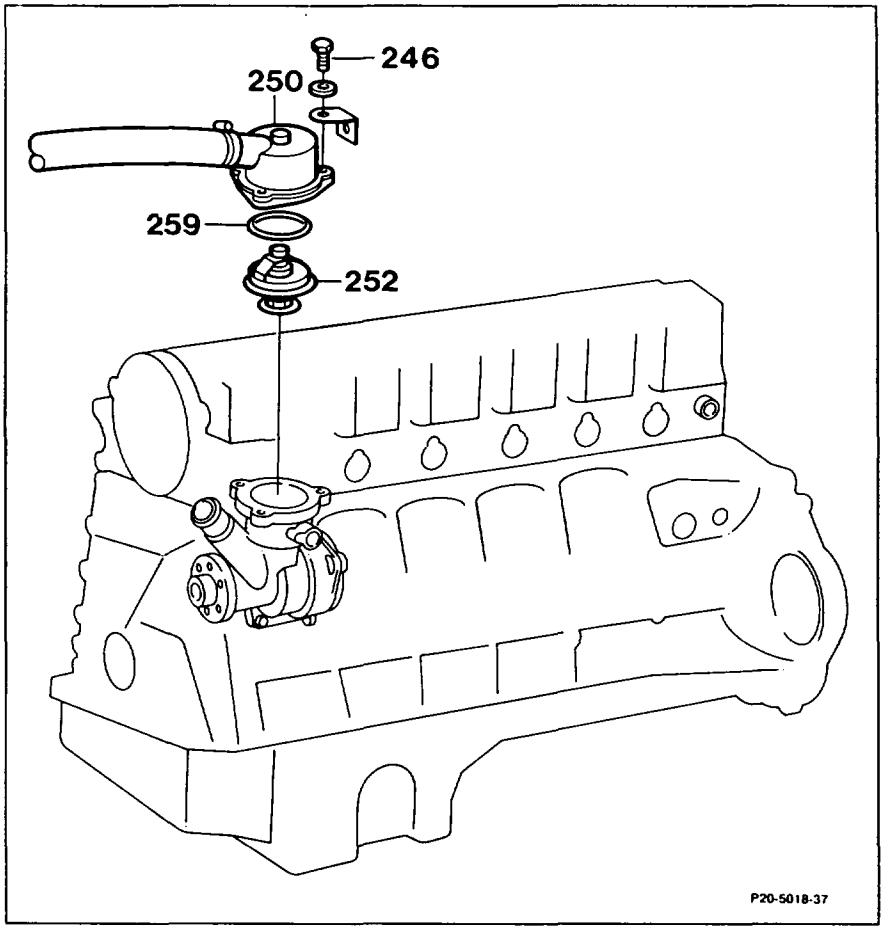

Top section of coolant thermostat housing (250)	detach, attach, bolts (246) 6 Nm.
Coolant thermostat (252)	remove, install, renew O-ring (259). Insert coolant thermostat so that ball valve is at the highest point.

20–2110 Replacing connecting pipe from cylinder head coolant pump

Preceding work:
Coolant pump removed (20–2100).

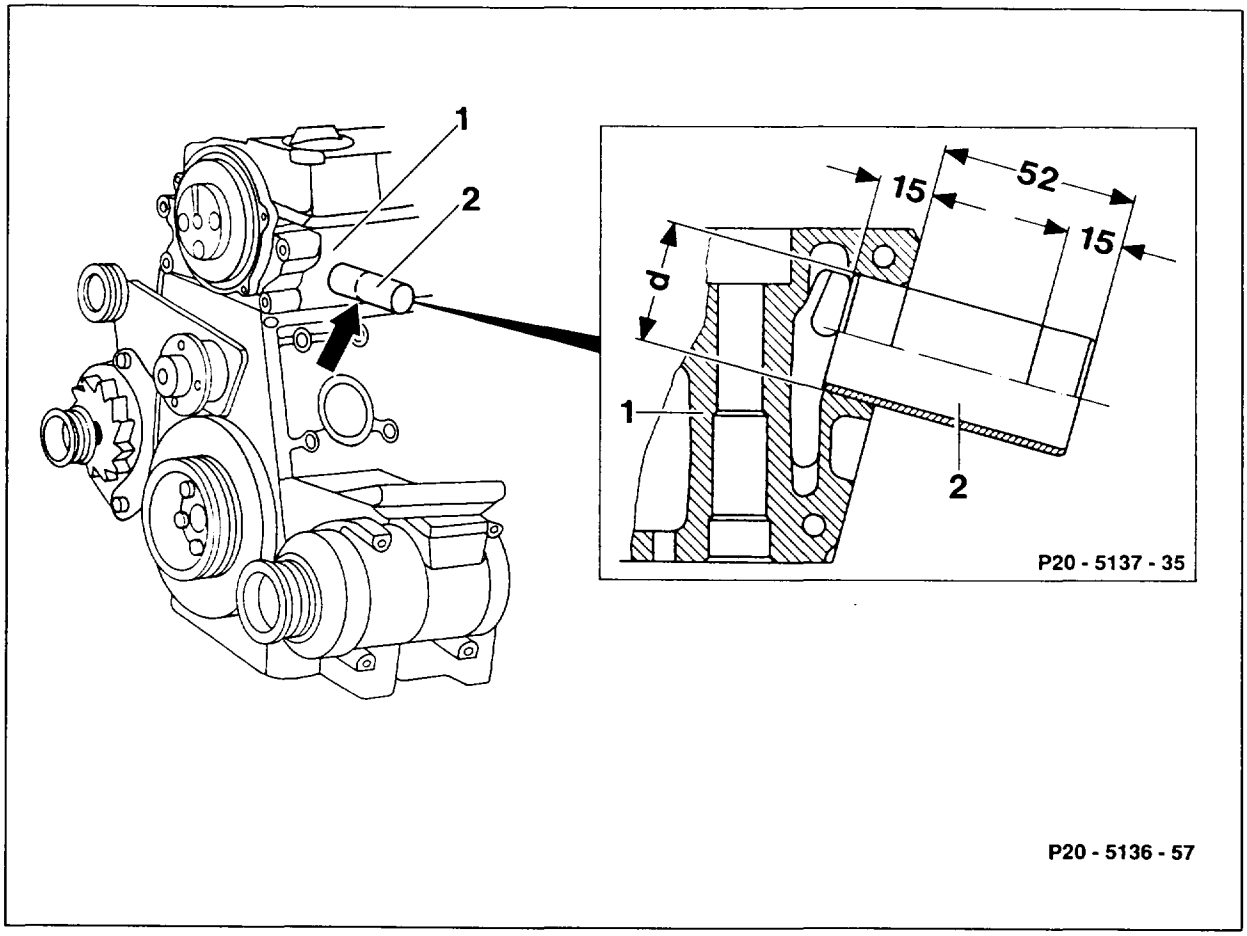

d Fit hole 33.000 – 33.025 mm

Connecting pipe (2)	cut off with 15 mm projection (arrow).
Connecting pipe (2)	apply pressure to the side with a punch, loosen in cylinder head (1).
Connecting pipe (2)	pull out with pliers.
Connection of new connecting pipe (2)	coat with Loctite 270 high-strengh 002 989 93 71 10.
New connecting pipe (2)	position at fit hole and knock in as far as stop with plastic-headed hammer.

20–2250 Sealing coolant pump

Preceding work:
Coolant pump removed (20–2100).

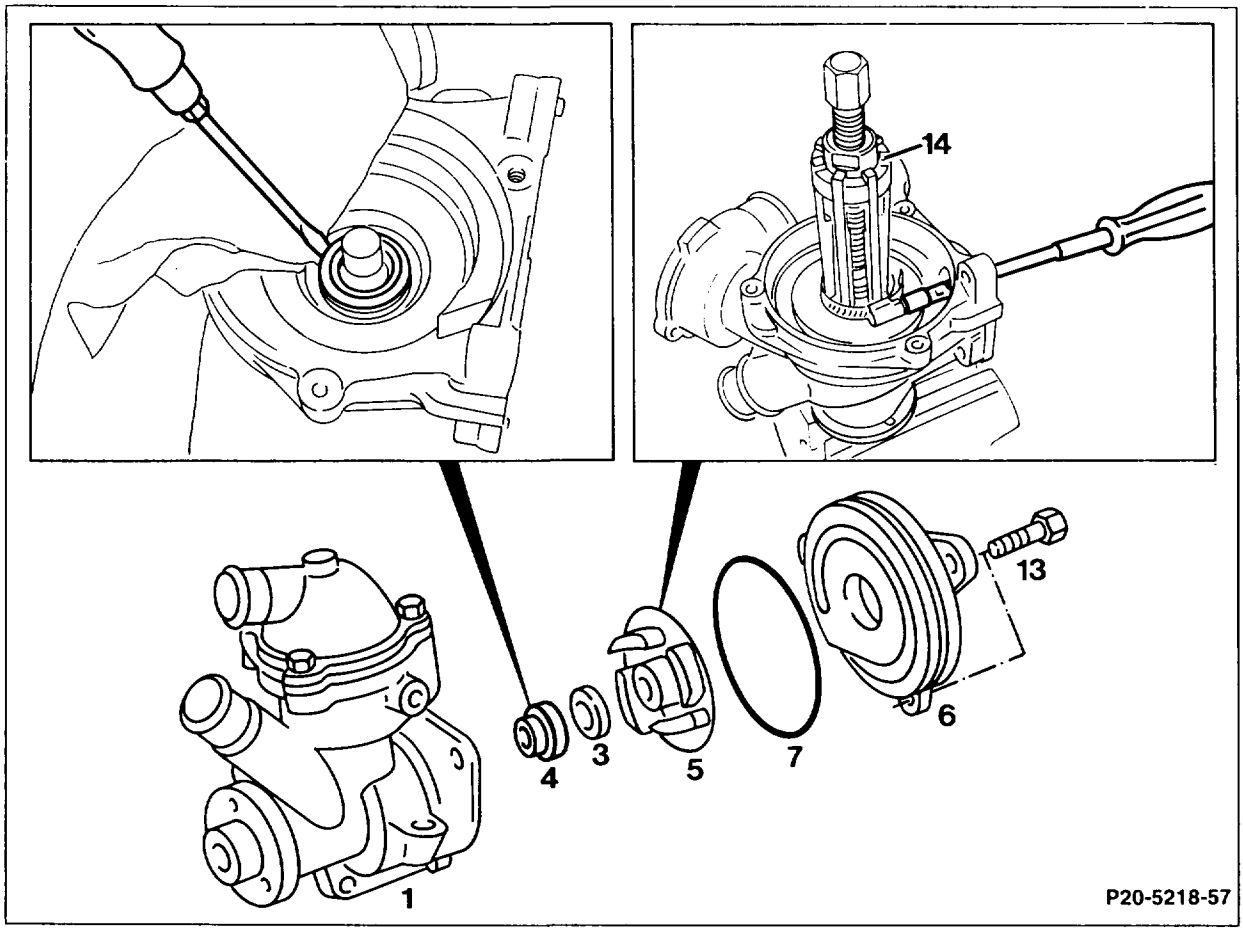

13 M6 × 20 bolt + washer

Spiral housing (6)	unscrew, screw on (10 Nm).
O-ring (7)	replace.
Puller (14) 000 589 94 33 00	position at impeller (5).
Grips of puller (14)	tension with sleeve ID 40 mm (shop-made) or suitable hose strap.
Impeller (5)	pull off.
Counter-ring (3)	pull off with pliers.

Cassette-type seal (4)	press out of coolant pump (1) around circumference with a screwdriver.

⚠

Do not damage coolant pump (1), use clean rag as base.

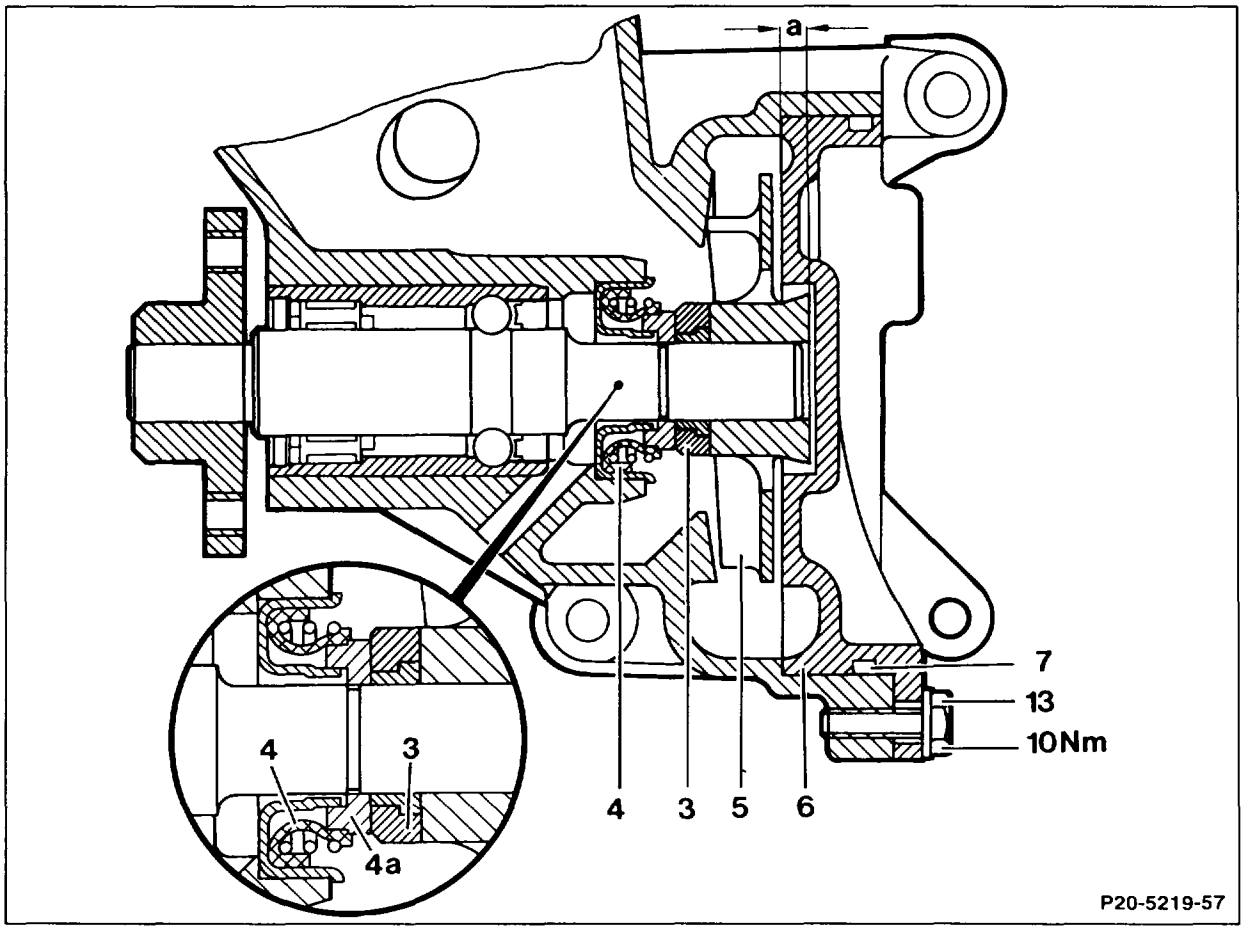

Mount for cassette-type seal (4)	clean.
	Note Sealant is applied to the circumference of the cassette-type seal (4).
New cassette-type seal (4)	press in as far as stop with a 40 mm dia. sleeve.

Counter-ring (3)	fit onto pump shaft with ground face toward seal (4a).
Impeller (5)	heat to approx. 100 °C.
Impeller (5)	press on.
Size (a) (5.6 – 5.8 mm)	observe.
Tight seat of impeller (5) on pump shaft	check.

Special tool

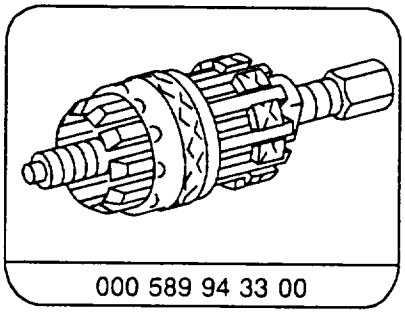

000 589 94 33 00

20–2255 Retrofitting coolant pump drain pipe

Preceding work:
Viscous fan coupling removed (20-3120).
Poly-V-belt removed (13-3420).
Belt pulley/vibration damper removed (03-3420).

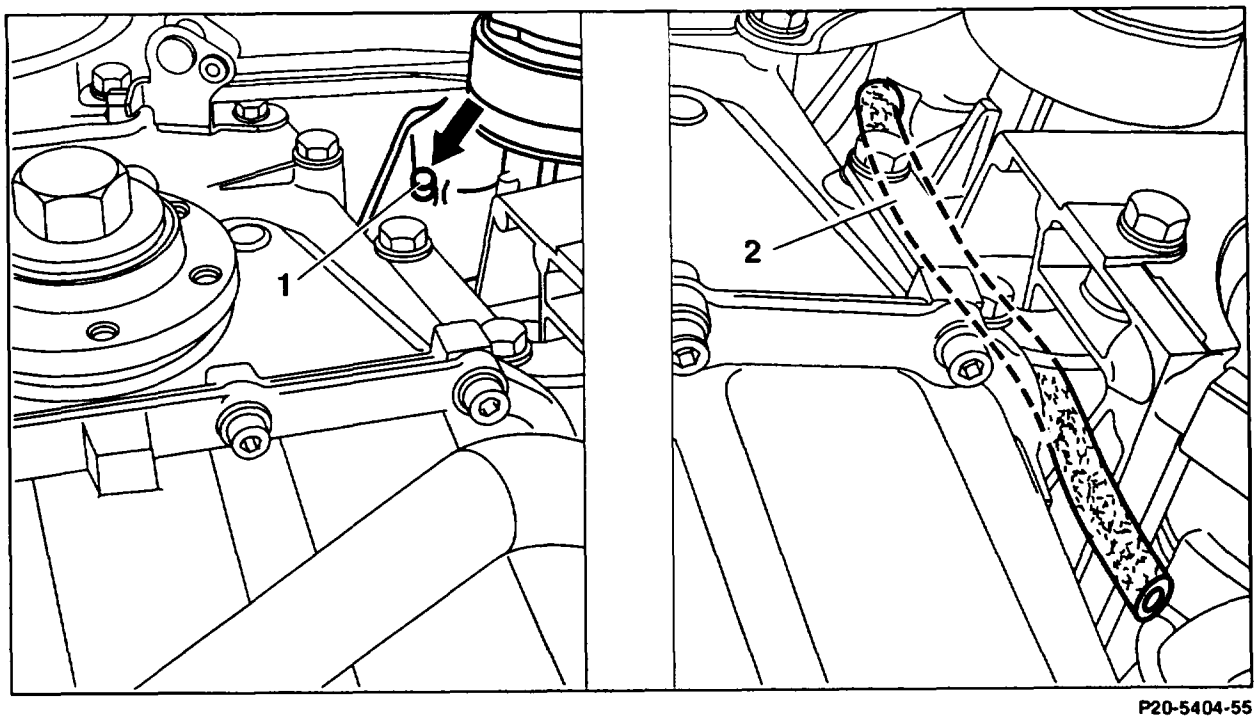

P20-5404-55

Belt pulleys at coolant pump and at fan bearing bracket	remove, install (13-3450)
Shock absorber of tensioning device	remove, install (13-3450)
1st version (coolant pump with Ø 7.5 mm hole)	
Connection fitting (1)	coat with adhesive
Connection fitting (1)	knock in with drift (shop-made tool)
Drainage pipe (2)	fit on to connection fitting (1) and run between crankcase and power steering pump mounting bracket
2nd version (coolant pump 103 200 37 01 with Ø 9.9 mm hole)	
Drainage pipe (2)	coat with adhesive Loctite 648, 003 989 32 71
Drainage pipe (2)	insert into Ø 9.9 mm hole and run between crankcase and power steering pump mounting bracket

Shop-made tool

Insertion drift
Material structural steel, eg. St.37-k

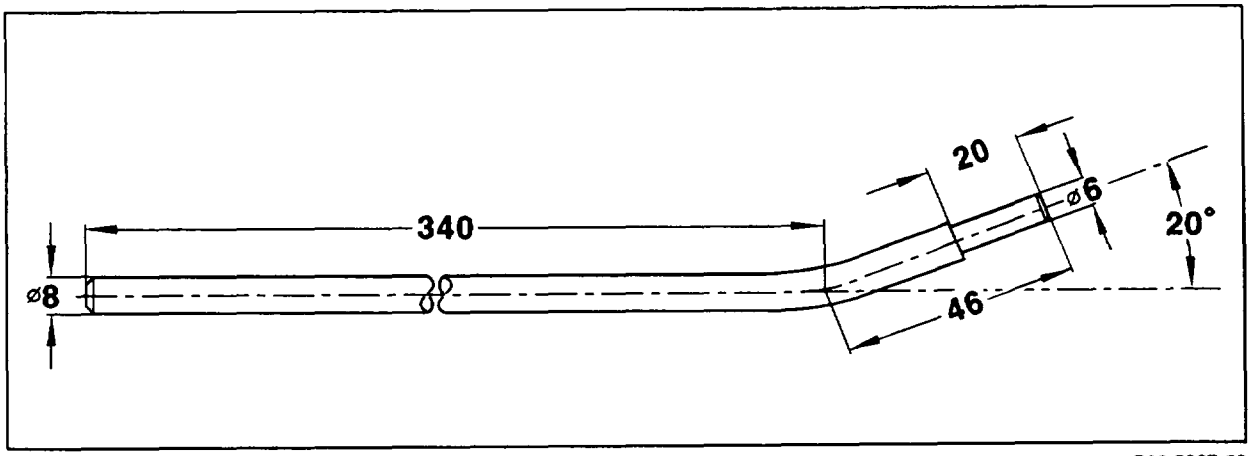

P20-5367-53

Replacement parts

Designation	Part number
Repair kit Ø 7.5 mm hole	103 200 20 52
Repair kit Ø 9.9 mm hole	104 203 08 02

20–3120 Removing and installing viscous fan clutch

Preceding work:
Warning instructions when hood open (01-0085).
Fan shroud removed (20-3400).

A. Models 107, 124, 126 fan shroud without fan shroud ring

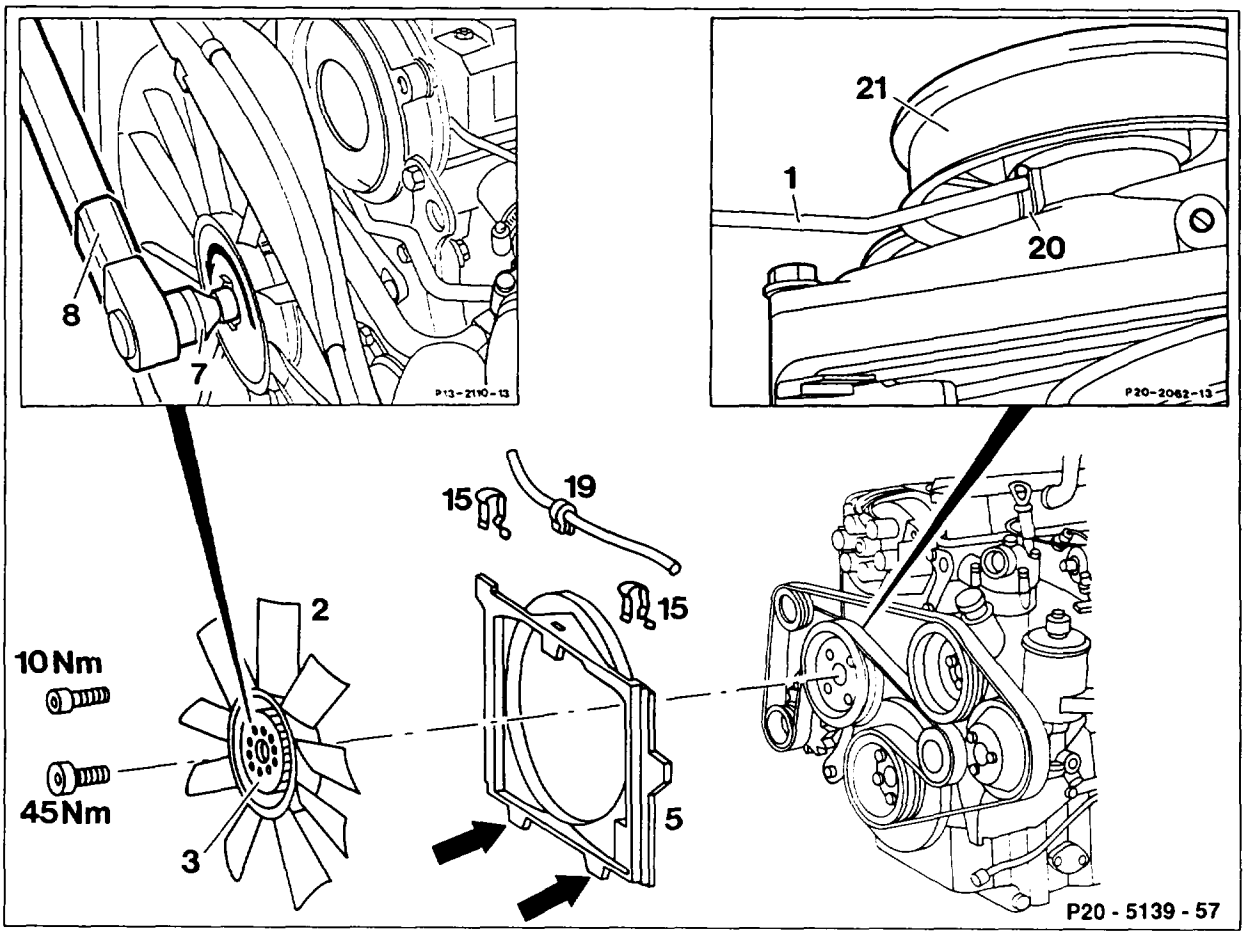

Viscous fan clutch (3) . . . . . turn with hexagon socket (7) 103 589 01 09 00 and torque wrench (8) 001 589 72 21 00.

Counter-holder (1) 103 589 00 40 00 . . . . . allow to engage from the rear of the belt pulley (21) into the retaining slot (20) of fan bearing bracket and at the same time into retaining hole of belt pulley.

Viscous fan clutch (3) with fan (2)	unscrew, remove, install (45 Nm).
Viscous fan clutch (3) of fan (2)	unscrew, screw on (10 Nm).

⚠
The cast part number of the fan (2) must be positioned at the front (radiator side).

Tightening torques in Nm

Viscous fan clutch to bearing body	45
Fan to viscous fan clutch	10

Special tools

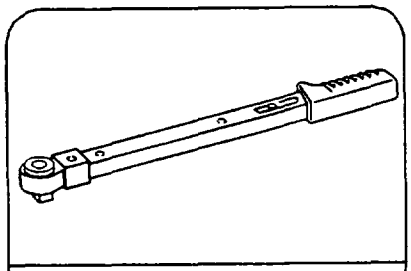
001 589 67 21 00

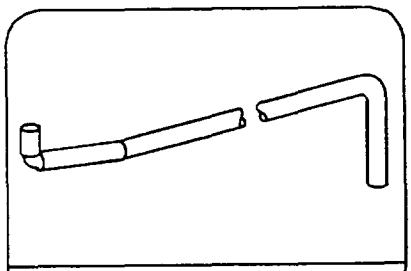
103 589 00 40 00

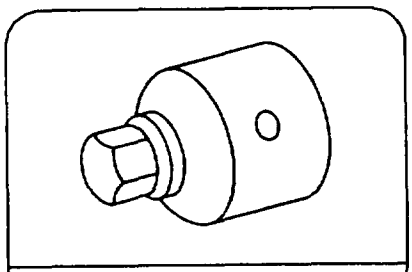
103 589 01 09 00

Modifications to viscous fan clutch and to fan

An improved cooling capacity is achieved by using a fan with 9 (previously 11) vanes and a modified viscous fan clutch.

Viscous fan clutch modified, production breakpoint: 11/1987

Model	Engine	Engine end no.		Vehicle ident end no.	
		manual transmission	automatic transmission	A	F
124.026	103.940	017337	037141	640984	060739
124.030 124.050 124.090	103.983	018887	097940	*	*
124.226	103.943	000151	000334	*	*
124.230 124.290	103.985	000623	002259	*	*
126.020	103.941	003051	010055	382144	*
126.024 126.025	103.981	005076	045443	*	*

* not recorded

Modified hose holder

The hose holder (1, 1a) for attaching the vent hose at the fan shroud (3) has been modified.

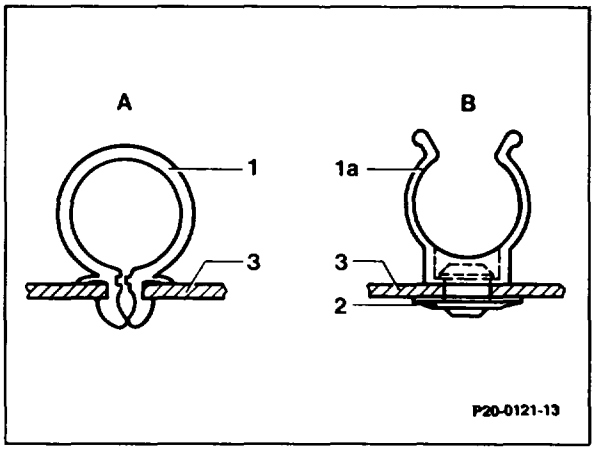

A Previous version
B Present version

Hose holder, production breakpoint: 02/1988 – 05/1988

Model	Engine	Engine end no.		Vehicle ident end no.	
		manual transmission	automatic transmission	A	F
107.041	103.982	*	*	089178	*
124.026	103.940	*	*	732131	*
124.030 124.050	103.983	*	*	*	*
124.090	103.983	*	*	*	065912
124.226	103.943	*	*	*	*
124.230 124.290	103.985	*	*	*	*

* not recorded

Modifications to attachment of viscous fan clutch to fan bearing bracket

The length of the bolt for attaching the viscous fan clutch to the fan bearing bracket has been modified from M10×60 to M10×45. This facilitates installation of the viscous fan clutch when changing the poly V-belt.

Length of bolt of viscous fan clutch, production breakpoint: 08/1988

Model	Engine	Engine end no.		Vehicle ident end no.	
		manual transmission	automatic transmission	A	F
107.041	103.982	002031	008845	*	*
124.026	103.940	023093	051714	*	*
124.030 124.050 124.090	103.983	025247	130873	*	*
124.226	103.943	000300	000679	*	*
124.230 124.290	103.985	001411	005031	*	*
126.020	103.941	003587	012094	*	*
126.024 126.025	103.981	006011	064846	*	*
201.029	103.942	011048	014816	*	*

* not recorded

Preceding work:
Fan shroud removed (20-3400).

B. Models 124, 126 fan shroud with fan shroud ring

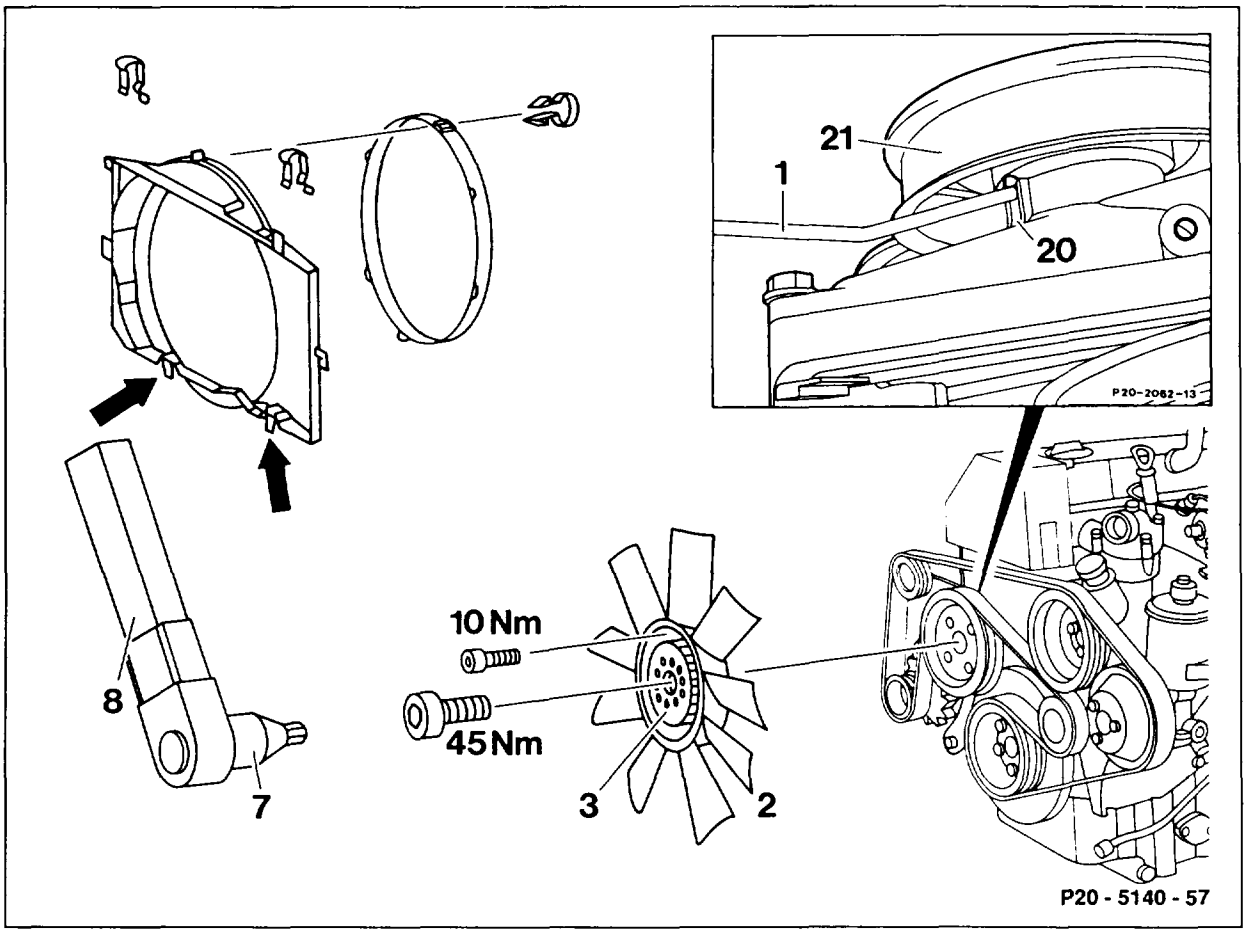

Viscous fan clutch (3)	turn with hexagon socket (7) 103 589 01 09 00 and torque wrench (8) 001 589 72 21 00.
Counter-holder (1) 103 589 00 40 00	allow to engage from the rear of the belt pulley (21) into the retaining slot (20) of fan bearing bracket and at the same time into retaining hole of belt pulley.
Viscous fan clutch (3) with fan (2)	unscrew, remove, install (45 Nm).
Viscous fan clutch (3) of fan (2)	unscrew, screw on (10 Nm).

⚠
The cast part number of the fan (2) must be positioned at the front (radiator side).

Tightening torques in Nm	
Viscous fan clutch to bearing body	45
Fan to viscous fan clutch	10

Special tools

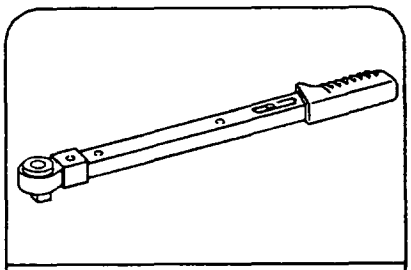

001 589 67 21 00

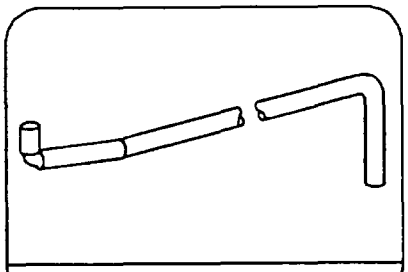

103 589 00 40 00

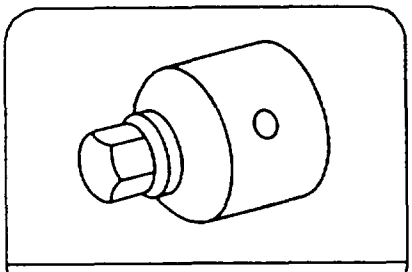

103 589 01 09 00

Note

The fan shroud has been split. This provides improved accessibility to the poly V-belt.

Production breakpoint for

Model 124: 12/1989 or 4/1990

Model 126: 08/1990

Preceding work:
Warning instructions when hood open (01-0085).

C. Model 129

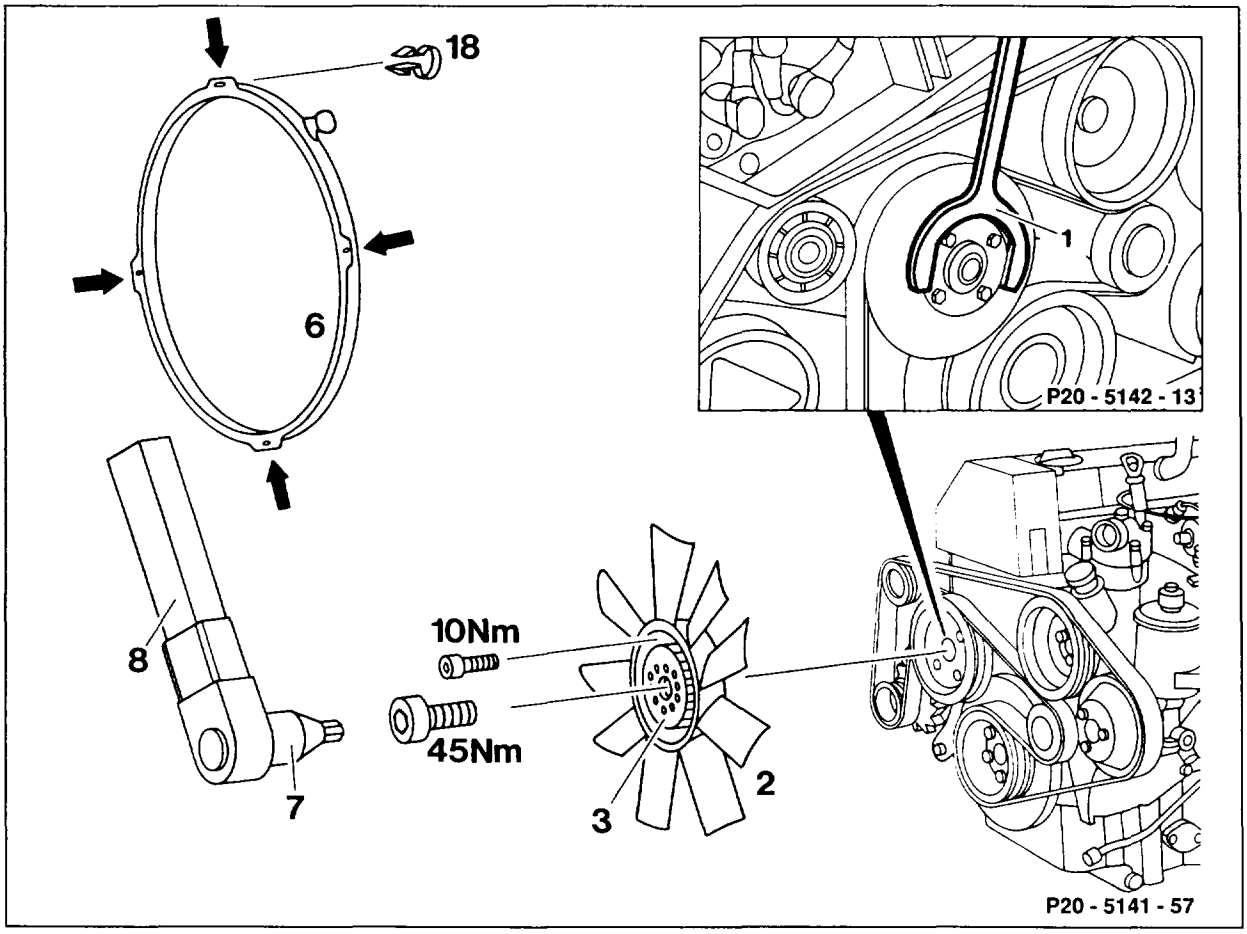

Locking pin (18)	remove, insert.
Fan shroud ring (6)	turn to left, place over fan (2), install.

⚠

When installing, ensure the 4 catches (arrow) of the fan shroud ring (6) are correctly seated in the fan shroud.

Counter-holder (1) 120 589 02 01 00	remove, fit on.
Viscous fan clutch (3) with fan (2)	unscrew with hexagon socket (7) 103 589 01 09 00 and torque wrench (8) 001 589 72 21 00, remove, install (45 Nm).
Viscous fan clutch (3) of fan (2)	unscrew, screw on (10 Nm).

⚠
The cast part number of the fan (2) must be positioned at the front (radiator side).

Tightening torques in Nm

Viscous fan clutch to bearing body	45
Fan to viscous clutch	10

Special tools

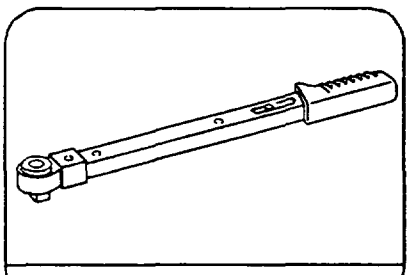
001 589 67 21 00

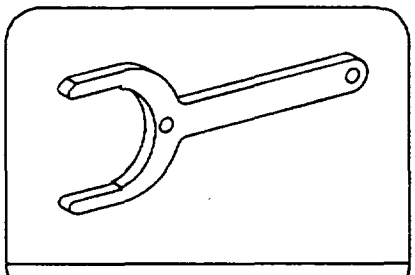
120 589 02 01 00

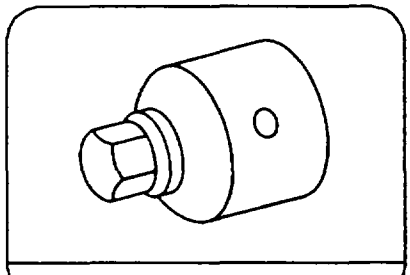
103 589 01 09 00

Preceding work:
Fan shroud removed (20–3400).

D. Model 201

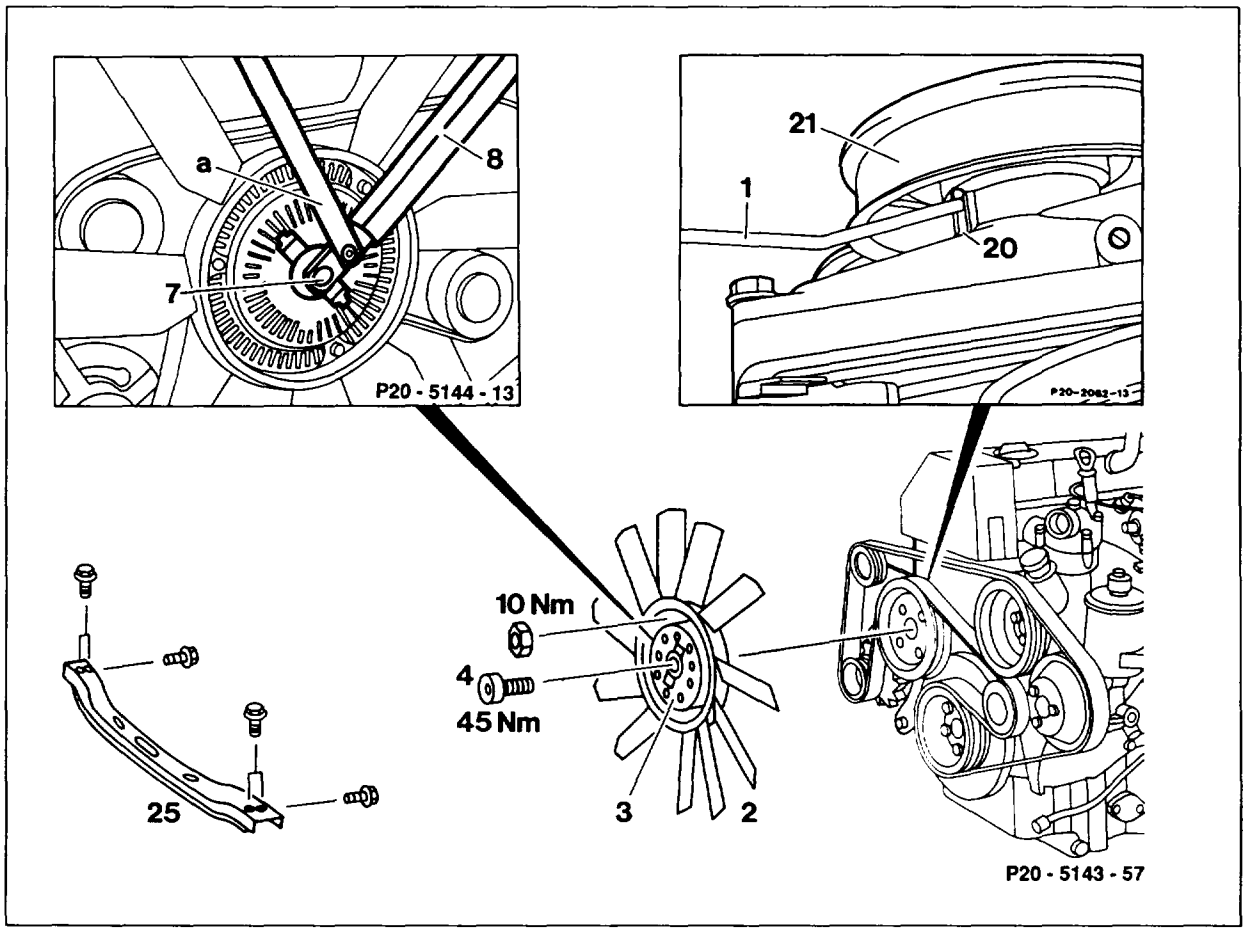

Radiator bridge (25)	unscrew, screw on (9 Nm).
Bowden cable of hood lock	detach from radiator bridge (25), attach.
Wrench (7) 120 589 13 07 00	position on bolt of viscous fan clutch.
Torque wrench (8) 001 589 72 21 00 with head removed (7)	position in wrench (7) and turn viscous fan.
Counter-holder (1) 103 589 00 40 00	allow to engage from the rear of the belt pulley (21) in the retaining groove (20) of the fan bearing bracket and at the same time into the retaining hole of the belt pulley.
Screw (4) of viscous fan clutch (3)	slacken, tighten (45 Nm).

Radiator	push slightly forward.
Wrench (7) with handle (a)	turn.
Screw (4)	unscrew, screw on.
Viscous fan clutch (3) with fan (2) and screw (4)	remove, install.
Viscous fan clutch (3) of fan (2)	unscrew, screw on (10 Nm).

⚠
The cast part number of the fan (2) must be positioned at the front (radiator side).

Tightening torques in Nm

Viscous fan clutch to bearing body	45
Fan to viscous fan clutch	10

Special tools

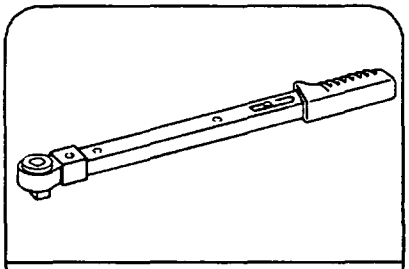
001 589 67 21 00

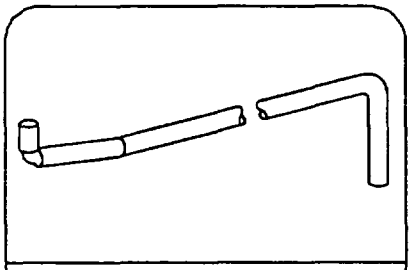
103 589 00 40 00

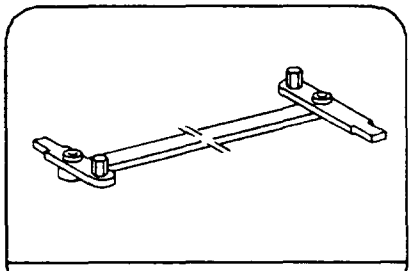
120 589 14 07 00

Note
An improved cooling capacity has been achieved by modifying the viscous fan clutch.

The fan is attached to the viscous fan clutch with M6 stud bolts and nuts (previously M6 bolts + washers).

Stud bolts at the viscous fan clutch, production breakpoint: 11/1987

Model	Engine	Engine end no.		Vehicle ident end no.	
		manual transmission	automatic transmission	A	F
201.029	103.942	007451	010349	422323	445905

20–3140 Removing and installing viscous fan clutch bearing bracket

Preceding work:
Viscous fan clutch removed (20–3120).

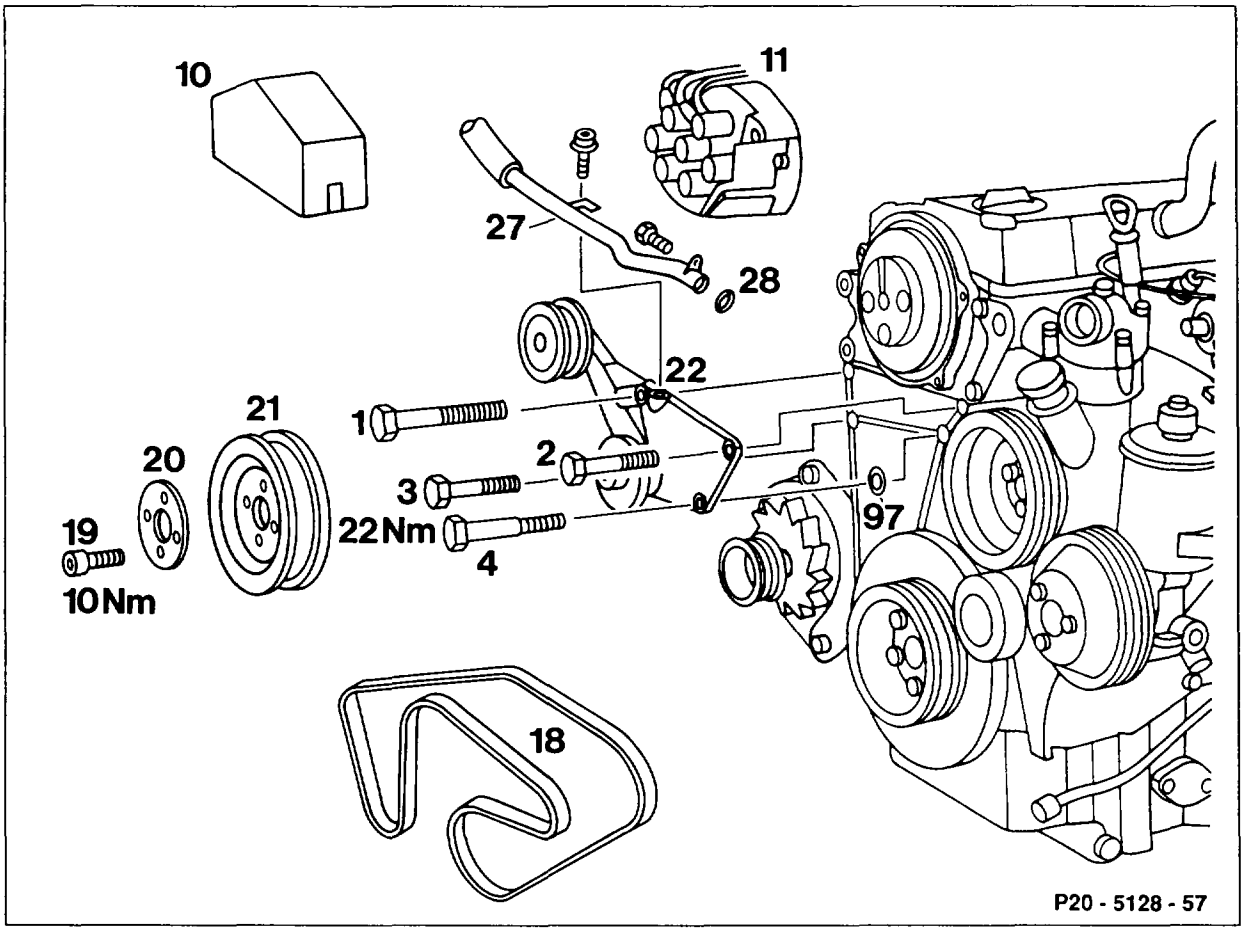

1 M8×80 bolt + washer
2 M8×65 bolt + washer
3 M8×60 bolt
4 M8×65 thrust collar bolt

Cover (10)	remove, install.
High tension distributor (11) with ignition cable connected	unscrew, place to the side, screw on.
Screws (19) of fan belt pulley (21)	slacken, tighten (10 Nm).
Poly-V-belt (18)	remove, install (13–3420).
Belt pulley (21) and disc (20)	remove, install.
Cap of expansion tank	open, release pressure.
Heating water return line (27) at coolant pump and bearing bracket (22)	unscrew, screw on, replace seal (28).
Opening of coolant pump	seal.

Bolts (1), (2), (3) and (4)	unscrew, screw on (22 Nm).
Thrust collar bolt (4)	coat with sealant 002 989 00 20 10.
Bearing bracket (22)	remove upward.
Seal (97) in timing case cover	replace.
Coolant	pour into system (20–0100).
Cooling system	check for leaks (20–0170).

Tightening torques in Nm

High tension distributor screws	10
Fan belt pulley screws	10
Viscous fan clutch bearing bracket bolts	22

Special tool

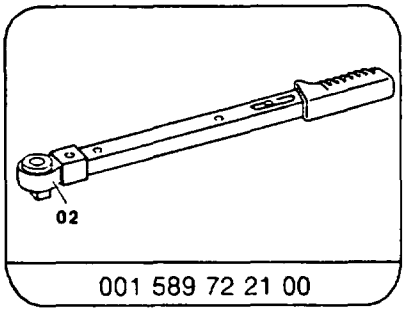

001 589 72 21 00

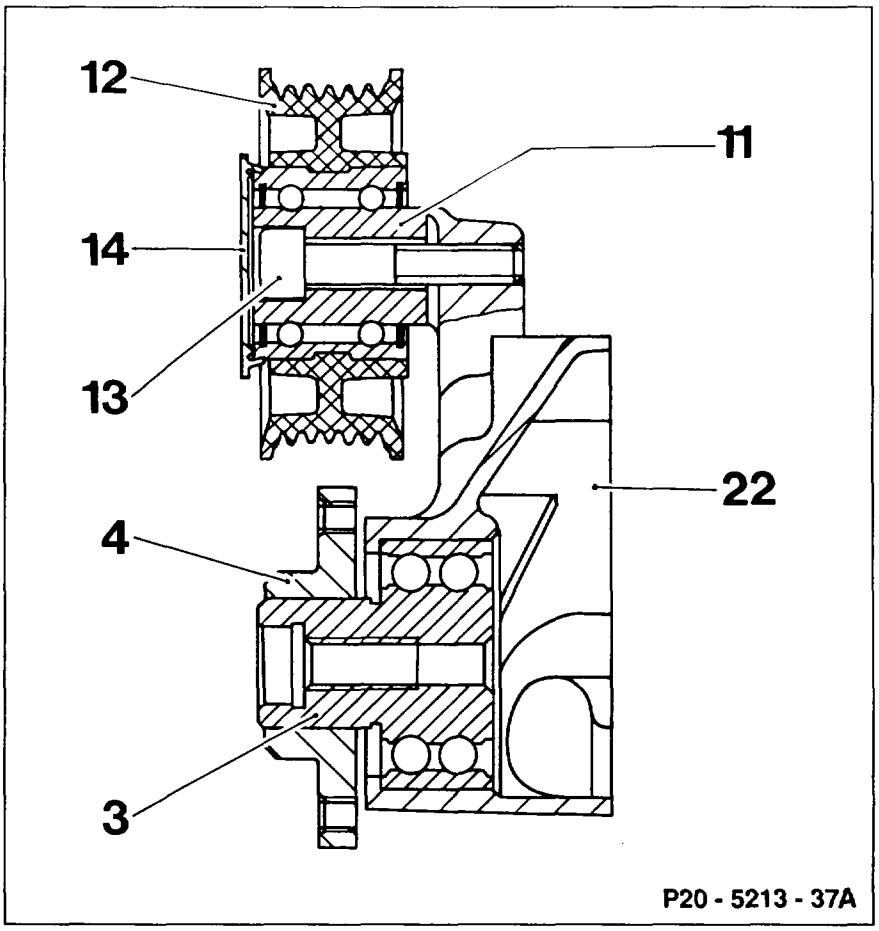

3 Bearing body
4 Hub
11 Bearing body
12 Guide pulley
13 Screw
14 Cover
22 Fan bearing bracket

Notes

Modification to fan bearing bracket

A tapped hole (arrow B) is provided for attaching the heating water return pipe.

The previous recess (arrow A) is eliminated.

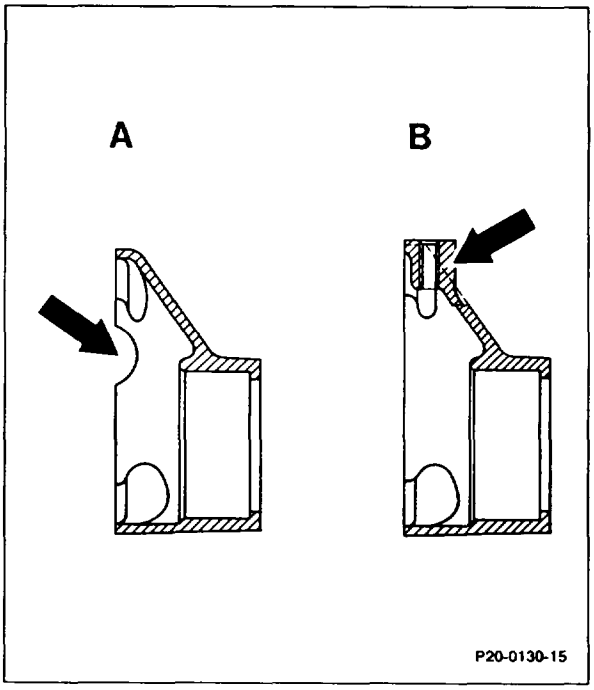

Tapped hole at fan bearing bracket, production breakpoint: 10/1985

Model	Engine	Engine end no.		Vehicle ident end no.	
		manual transmission	automatic transmission	A	F
107.041	103.982	000110	000557	*	*
124.026	103.940	000862	001039	*	*
124.030 124.090	103.983	001765	007120	*	*
126.020	103.941	000124	000432	*	*
126.024 126.025	103.981	000280	001723	*	*

* not recorded

20–3400 Removing and installing, adjusting fan shroud

Preceding work:
Warning instructions when hood open (01-0085).
Bottom front engine compartment panel removed (Maintenance Manual 6190).

Removal, installation

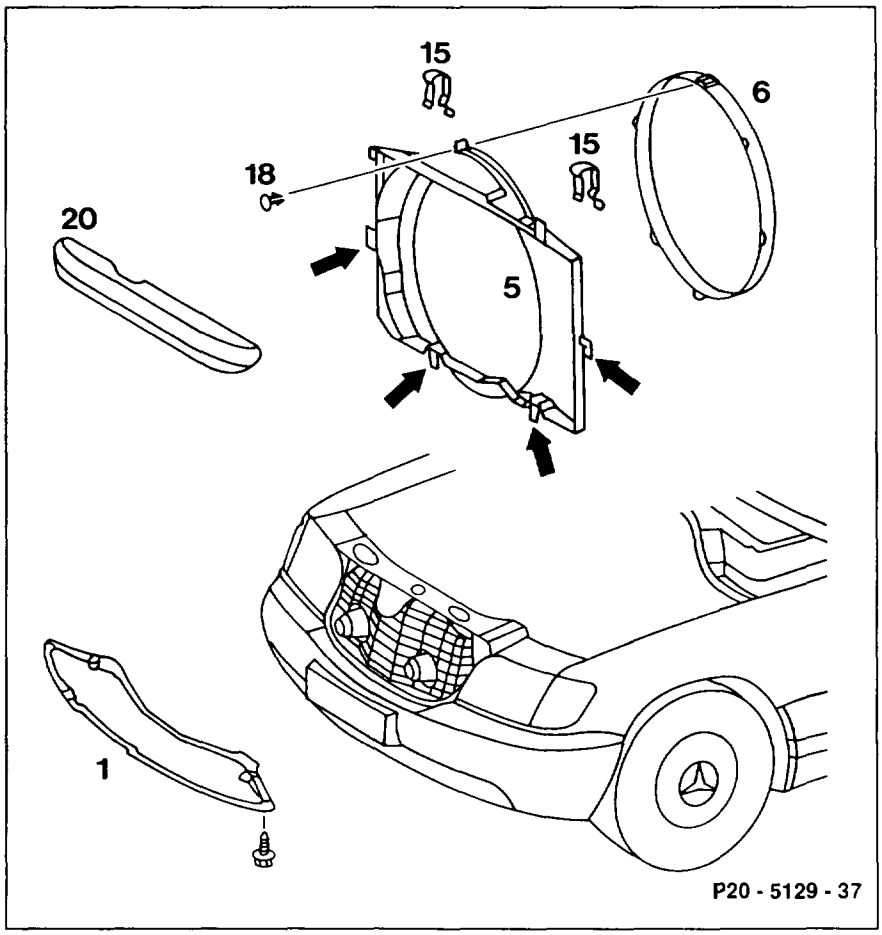

Model 129: top radiator panel (20)	remove, install.
If fan shroud not split version: hose holder at fan shroud	unclip, clip in place.
For split fan shroud: locking pin (18)	remove, install.
For split fan shroud: fan shroud ring (6)	turn to the left, place over fan, install.

⚠

When installing, ensure the 4 catches and lugs of the fan shroud ring (6) are properly seated in the fan shroud (5).

Flat-shaped springs (15)	pull off upward, insert.
If fan shroud not split type: viscous fan clutch . . .	remove, install (20-3120).
Fan shroud or fan shroud (5) and fan shroud ring (6)	remove, install.

⚠
When installing, insert catches (arrows) of fanshroud (5) into the mounts on the radiator.

Adjusting

Model 107

A 22 mm
B 28 mm
C 20 mm

Models 124, 126, 129

A 16.5 – 19.5 mm
B 22.5 – 25.5 mm
C 19.5 – 25.5 mm

Model 201

A 15.5 – 18.5 mm
B 24.5 – 27.5 mm
C 18.5 – 24.5 mm

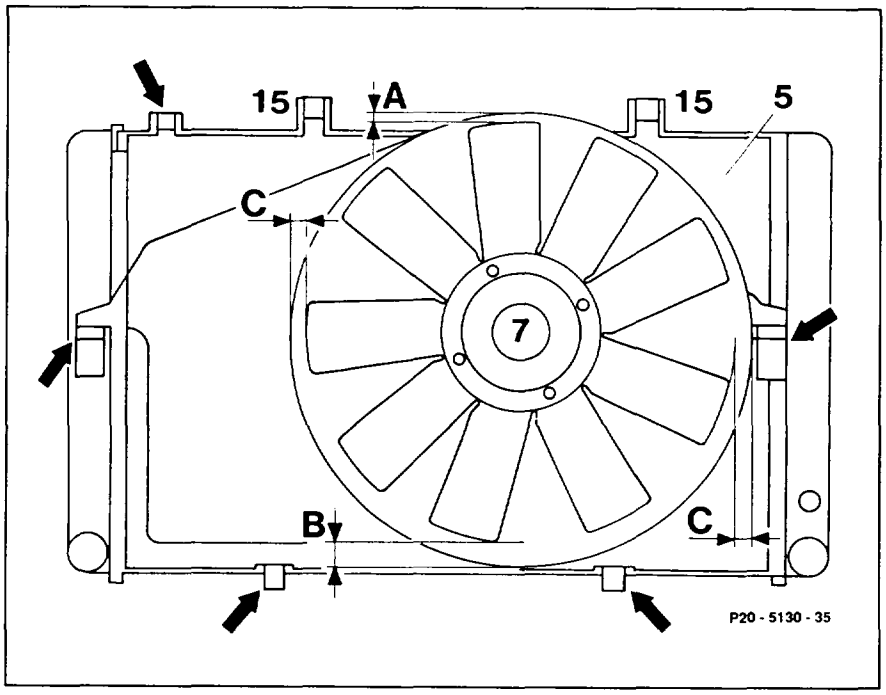

Flat-shaped springs (15)	pull off upward.
Fan shroud or fan shroud (5) with fan shroud ring	adjust relative to fan (7) according to dimensions (A), (B), (C).

⚠
Model 107, pay attention to note.

Flat-shaped springs (15)	install.

Note

A modified fan shroud is installed in model 107 as of vehicle ident end no. 107 041 1A 054 714 with 14 reinforcing ribs at the bottom (arrow). This fan shroud should be installed when performing repairs.

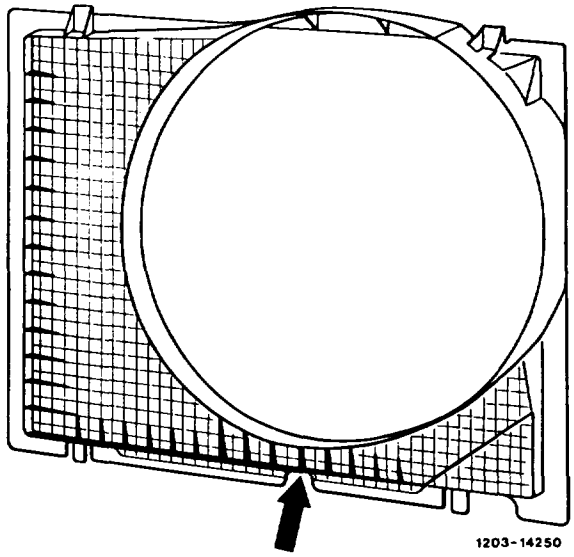

20–4200 Removing and installing radiator

Preceding work:
Warning instructions when hood open (01–0085).
Coolant drained at radiator (20–0100).
Bottom engine compartment panel removed (Maintenance Manual Volume 2, Op. no. 6190)

Operation no. of operation texts and work units or standard texts and flat rates
20–3865 – 20–4535

A. Models 107, 124, 126

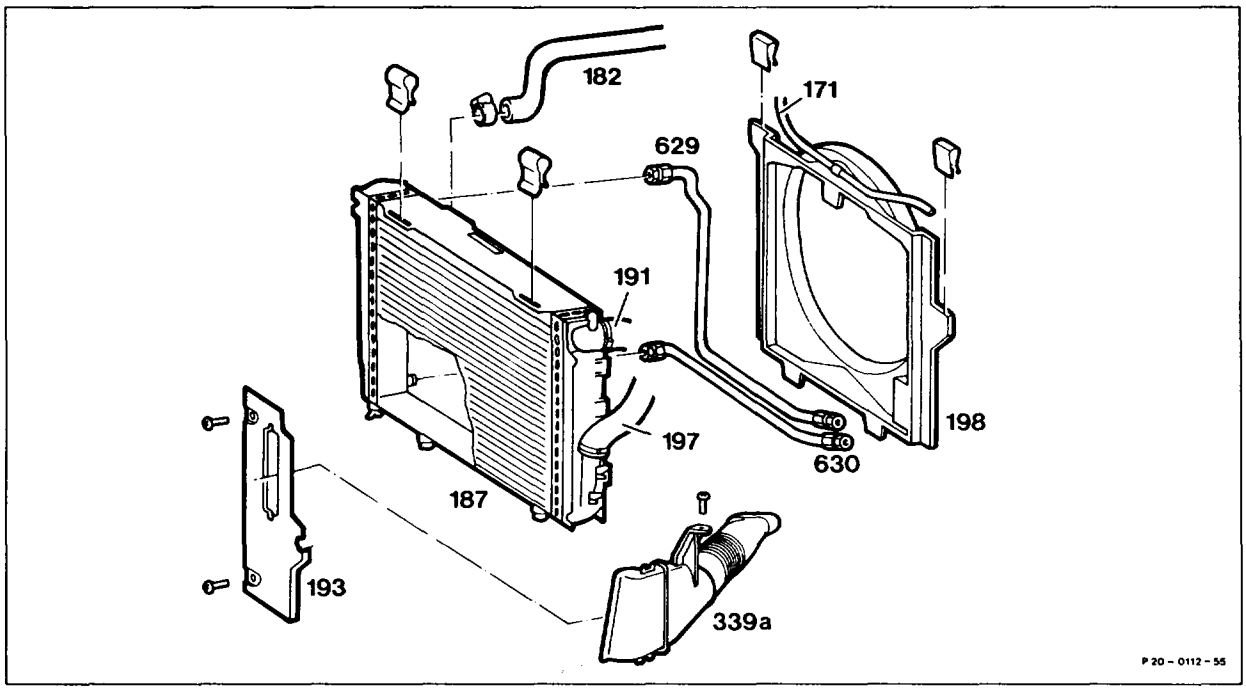

Coolant hoses (171, 182, 191, 197)	detach, attach (step 1).
Connection for overflow hose	check, renew if necessary (step 2).
Air scoop (339a) on Model 124	remove, install (step 3).
Fan cowl (198)	detach, attach (step 4).
Radiator cover (193) on Model 124	detach, attach (step 5).
If automatic transmission fitted:	
Oil lines (629, 630)	detach, attach, 20 Nm. Check oil level. (step 5).
Radiator (187)	remove, install (step 6).
Installation	in the reverse order.
Cooling system	check for leaks (20–0170).

Special tools

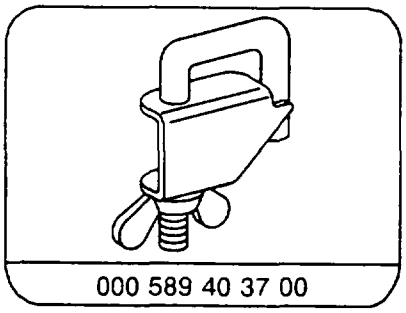

000 589 40 37 00

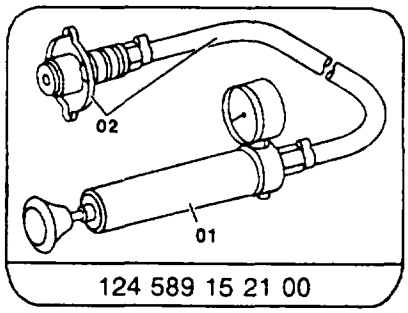

124 589 15 21 00

Commercially available tool

7 mm socket wrench insert on flexible shaft for hose clip with worm drive	eg. Hazet D–42857 Remscheid Order no. 426-7

Removal, installation

1 Detach coolant hoses (191, 197) at the coolant pump and coolant hose (171) at the radiator.

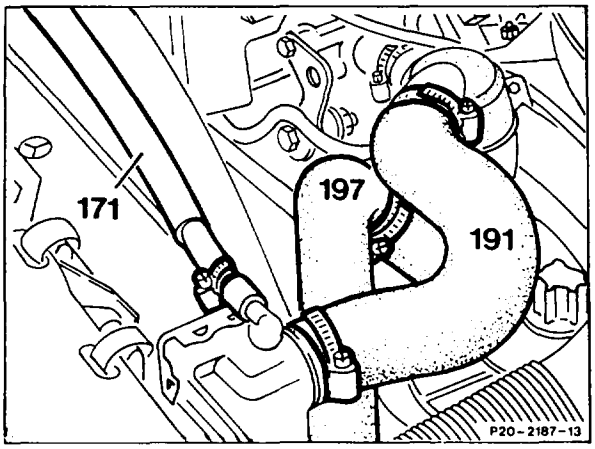

2 Check connection for overflow hose for signs of damage and leaks; replace if necessary (20-4270).

Model 124

3 Remove screw (338). Detach air scoop (339a) from air filter in direction of arrow and remove.

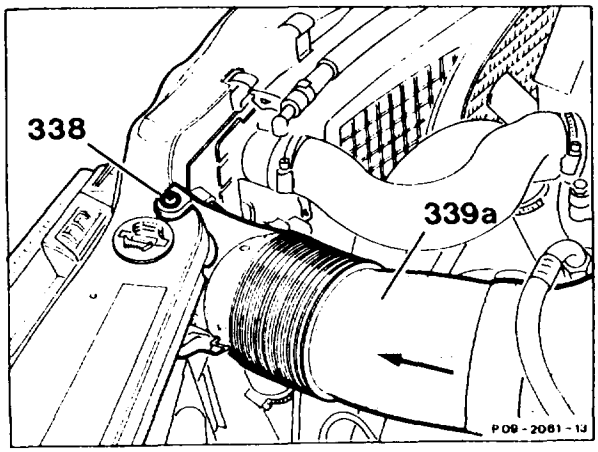

4 Withdraw flat springs (628) upward and raise the fan cowl (198) slightly and place over the fan.

Installation instruction

Introduce catches on the fan cowl into the mount on the radiator.

Shown on model 124

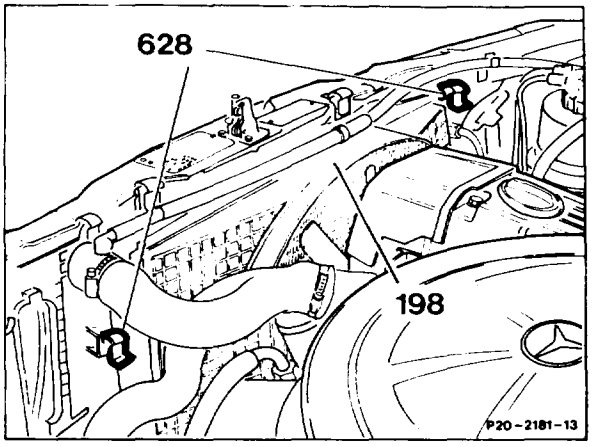

Model 126.025 (USA)

Withdraw locking pin (1) and turn the fan cowl ring (2) to the left and place over the fan.
Withdraw flat springs upward and take out the fan shroud (3).

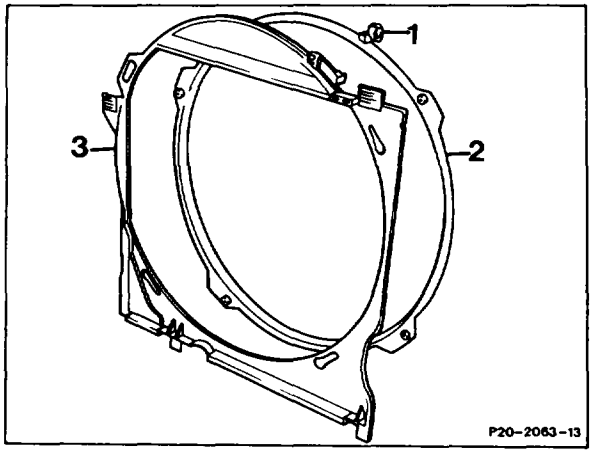

Model 124

5 Remove screws (338) for radiator cover.

Note

If car fitted with automatic transmission: unscrew oil lines at the radiator.
Check oil level.
Tightening torque 20 Nm (reference value).

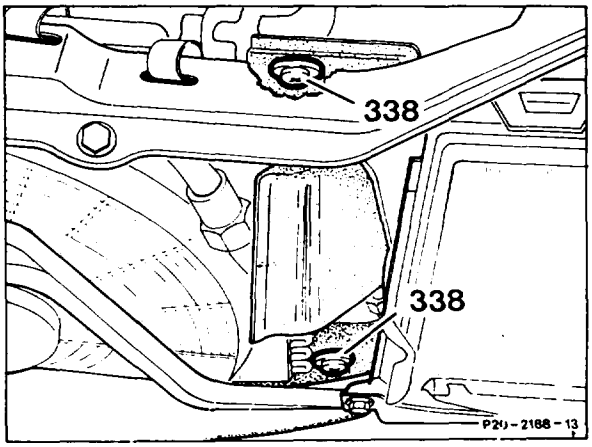

Models 124, 126

6 Withdraw flat springs (173) upward and lift the radiator (187) up out of the rubber grommets of the cross bar.

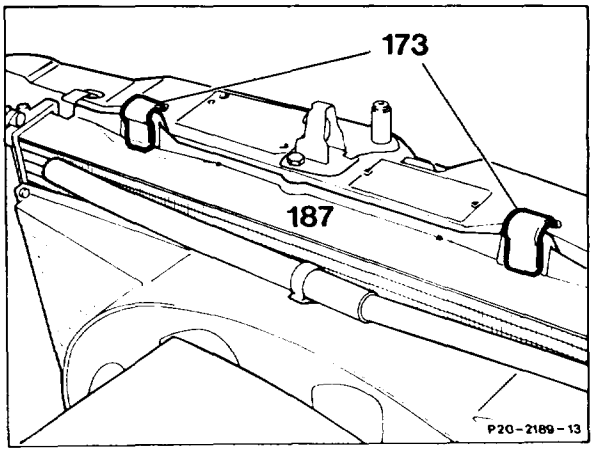

Model 107

Press left and right spring clamps (arrow) outward and lift the radiator up out of the rubber grommets of the cross bar.

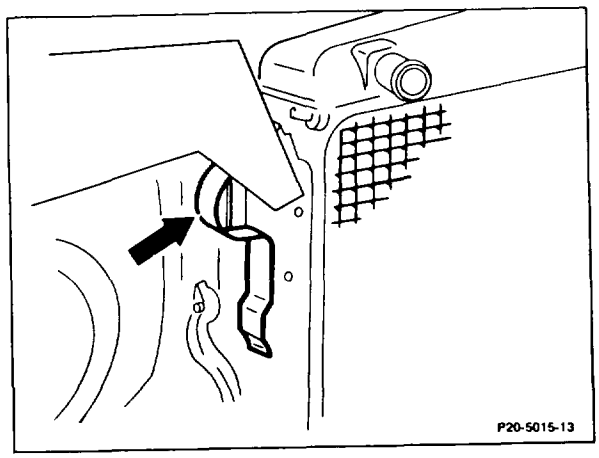

Installation instruction

The mounting studs on the bottom of the radiator must be inserted into the rubber grommets of the cross bar or bracket.

Installation is performed in the reverse order.

7 Test cooling system for leaks (20-0170).

Preceding work:
Hood raised to vertical position (01–0080).
Coolant drained at radiator (20–0100).
Bottom engine compartment panel removed (Maintenance Manual Volume 2, Op. no. 6190).

B. Models 129, 201

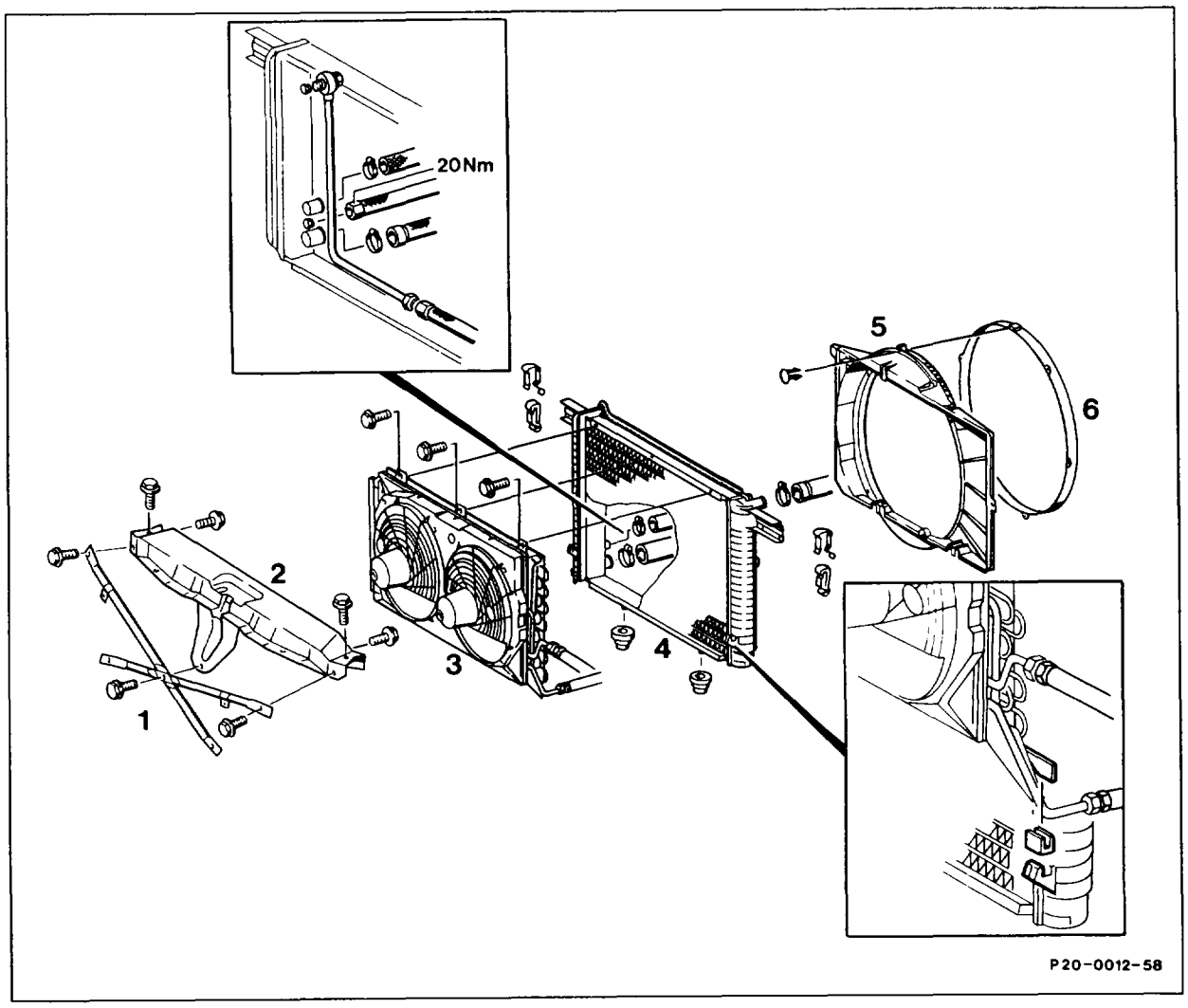

If automatic transmission fitted:	unscrew oil lines at radiator, screw on, 20 Nm, (step 1).
Coolant hoses	detach, attach (step 2).
Air scoop (air filter)	remove, install (step 3).
Fan cowl ring (6)	detach, attach (step 4).
If air conditioning fitted: strut (1) and transverse support (2)	unscrew, screw on (step 5).
If air conditioning fitted: bracket for air conditioning line, bottom left, on Model 129	unscrew, screw on (step 6).
Front bumper on Model 201	remove, fit on (88–200) (step 7).
If air conditioning fitted: condenser (3)	unscrew from radiator (4), screw on (step 7).

If air conditioning fitted: condensor (3) of air conditioning with auxiliary fans	raise, insert (step 8).
Radiator (4) with fan shroud (5)	remove, install (step 9).
Fan cowl (5)	take off radiator (5), fit on (step 10).
Installation	in the reverse order.
If automatic transmission fitted	check oil level.
Cooling system	test for leaks (20-0170).

Commercially available tool

7 mm socket wrench insert on flexible shaft for hose clip with worm drive	eg. Hazet D–42857 Remscheid Order no. 426–7

Removal, installation

1 If automatic transmission fitted: unscrew oil lines at radiator.

Installation instruction
Tightening torque 20 Nm.

2 Detach coolant hoses at radiator and at the coolant pump.

3 Detach air scoop from air filter.

4 Remove fan cowl ring (2) by withdrawing locking pin (1) and turning the fan cowl ring (2) to the left. Place fan cowl ring on the fan.

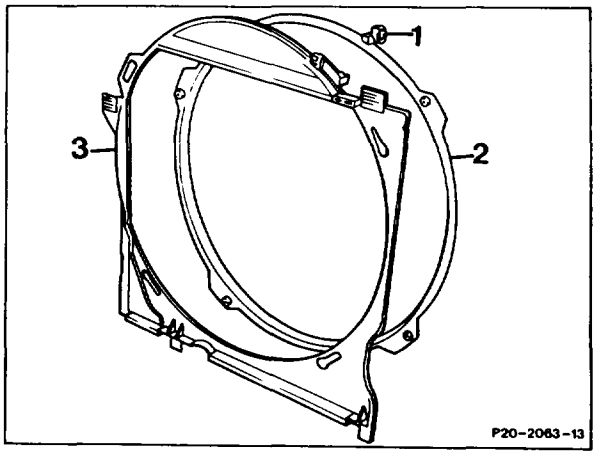

Installation instruction
Ensure the four engaging points are correctly located.

5 Unscrew strut, unscrew cross support and place to the side with engine hood cable connected.

Model 129

6 If air conditioning fitted: unscrew bracket for air conditioning line on bottom left at radiator support.

7 If air conditioning fitted: unscrew condensor from radiator.

Model 201

Remove the front bumper (88–200) before unscrewing the condensor.

8 If air conditioning fitted: raise condensor of air conditioning system with auxiliary fan.

Model 129

Installation instruction

Insert both rubber mounts (1) into the supports (2) on left and right of radiator (stick on). When installing radiator, raise the condensor with auxiliary fans. Introduce bearing points (arrow) into the rubber mounts (1).

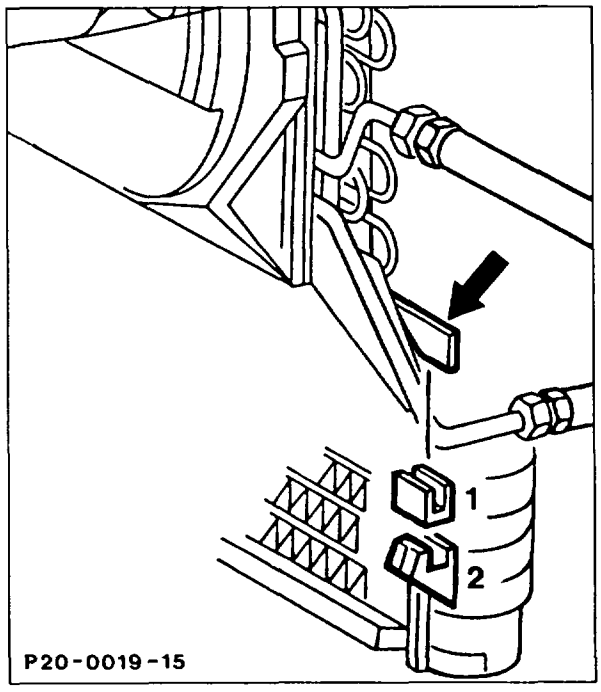

9 Withdraw flat springs upward and lift radiator up out of the rubber grommets of the cross support.

Installation instruction

The mounting studs of the radiator must be introduced into the rubber grommets of the cross support or bracket.

10 Take fan shroud off radiator.

Installation is performed in the reverse order.

11 If automatic transmission fitted: check oil level.

12 Test cooling system for leaks (20–0170).

20–4270 Replacing vent connection at radiator

Preceding work:
Warning instructions when hood open (01-0085).

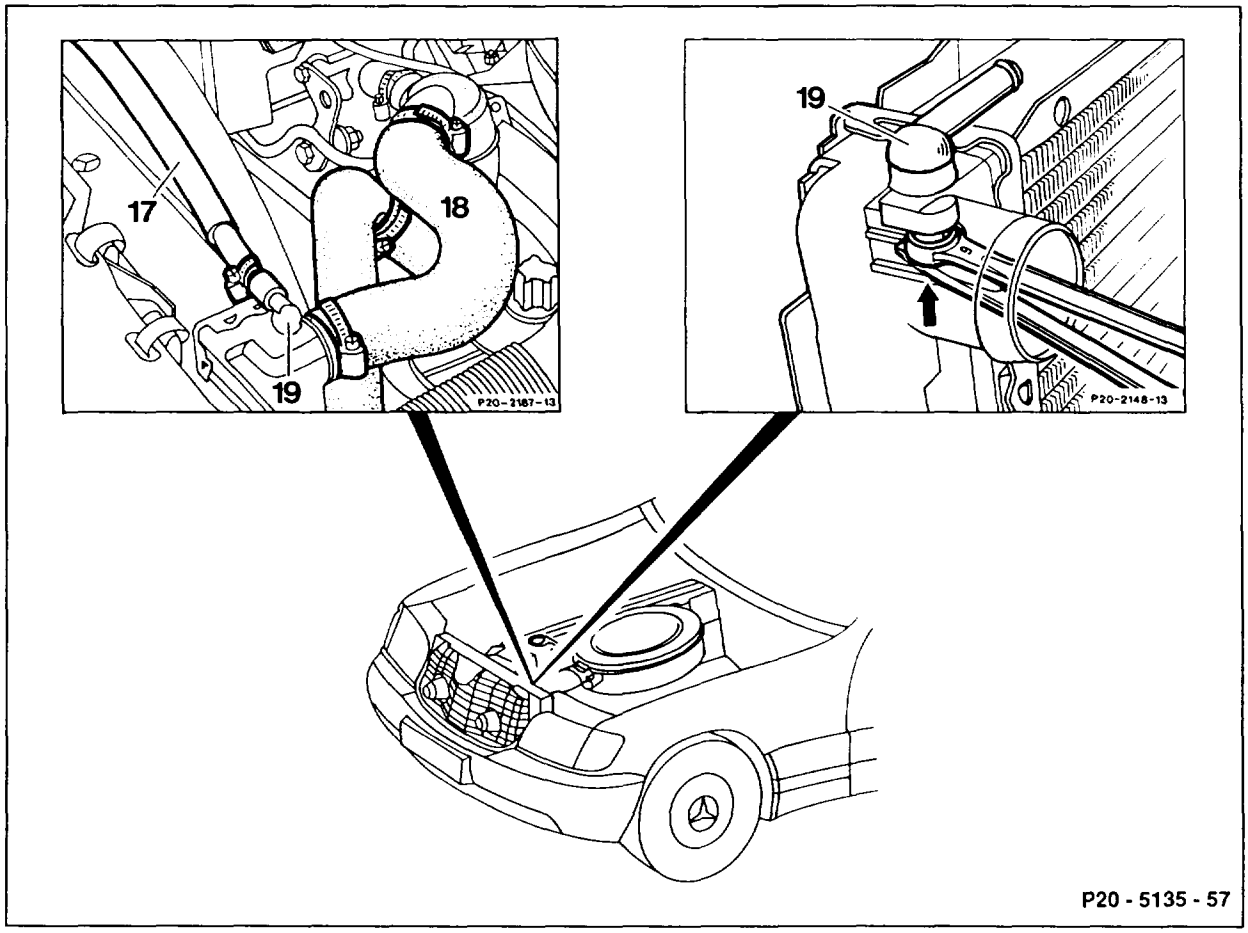

Coolant at radiator	drain, pour in (20–0100).
Coolant hoses (17) and (18) at radiator	disconnect, fit on.
Connection fitting (19)	illuminate from inside with rod lamp.
Straight ring wrench (9 mm)	fit onto connection fitting (19).
Screwdriver (arrow)	fit in place and push out connection fitting.
New connection fitting	insert.

Operation no. of operation texts and work units or standard texts and flat rates

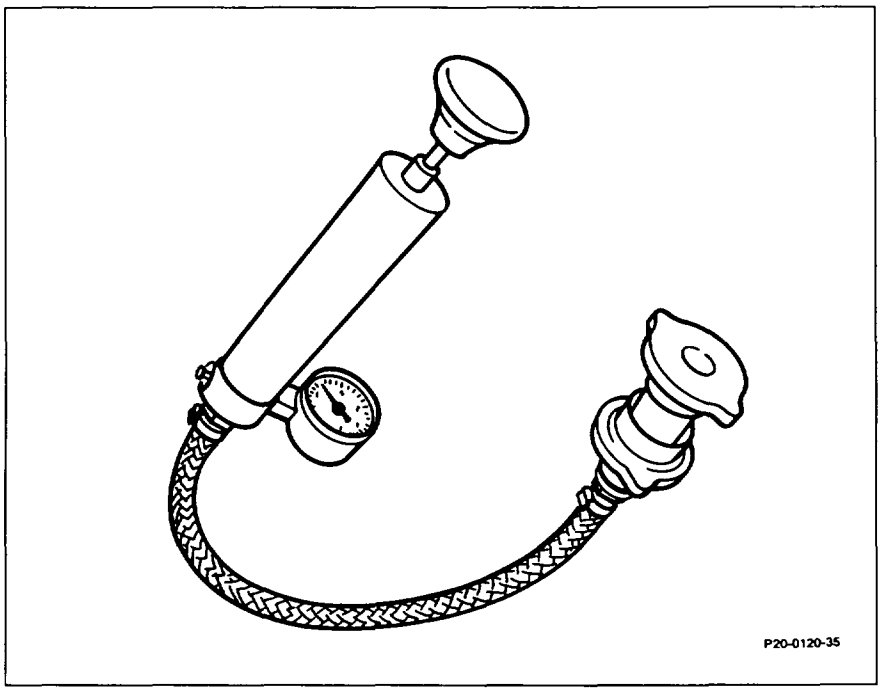

Double union 000 589 77 63 00	connect to leaktightness tester 124 589 15 21 00 (step 1).
Cooling system pressure cap	fit onto double union 000 589 73 63 00 (step 2).
Opening pressure	test (step 3).

Pressure cap

Pressure cap code number	Pressure relief valve opens at bar gauge pressure		Vacuum valve opens at bar vacuum	Test pressure for pressure-testing cooling system in bar gauge
	new	used		
120	1.2 ± 0.1	1.2 – 0.1	0.1	1 – 1.3
140 as of see table	1.4 ± 0.1	1.4 – 0.1	0.1	1 – 1.3

Special tools

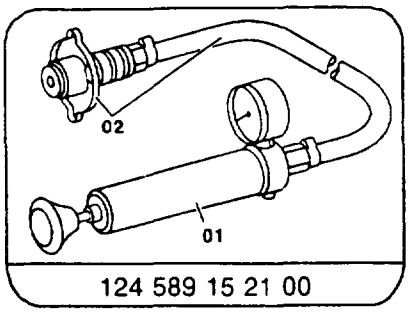

124 589 15 21 00

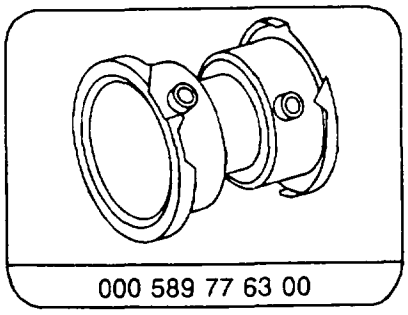

000 589 77 63 00

Note
If corrosion is present on expansion tank cap, renew cap.

The opening pressure of the cap has been increased from the previous 1.2 bar to 1.4 bar which in turn increases the permissible coolant temperature from 125 °C to 129 °C when standard antifreeze protection exists down to -30 °C.

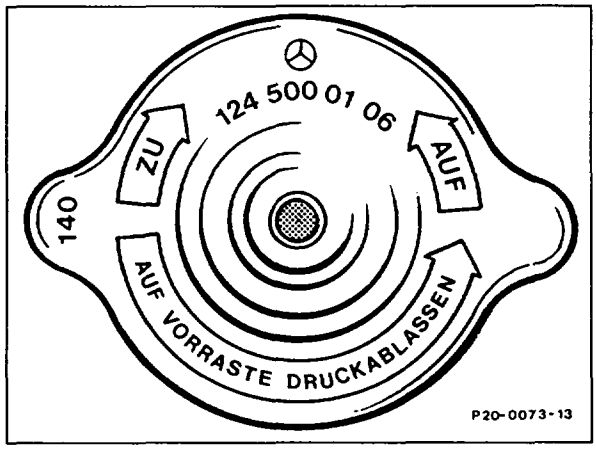

Expansion tank cap 1.4 bar, production breakpoint

Model		Vehicle Ident End No.
107	12.1987	A 081220
124	10.1987	A 619444
124	12.1987	F 061097
126	12.1987	A 388193
201	10.1987	A 416011
201	12.1987	F 451531

To ensure no outside air is drawn in at this cap (when vacuum exists in cooling system), it is provided with a rubber seal (A).

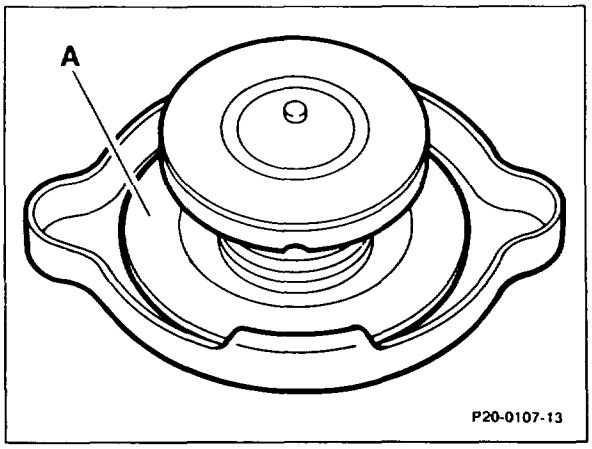

Caps with and without guide ring (B) are factory-fitted. Only the cap with guide ring is supplied as a replacement part, however.

The modified cap can also be installed in cars with coolant expansion tank manufactured prior to this date.

A Seal
B Guide ring

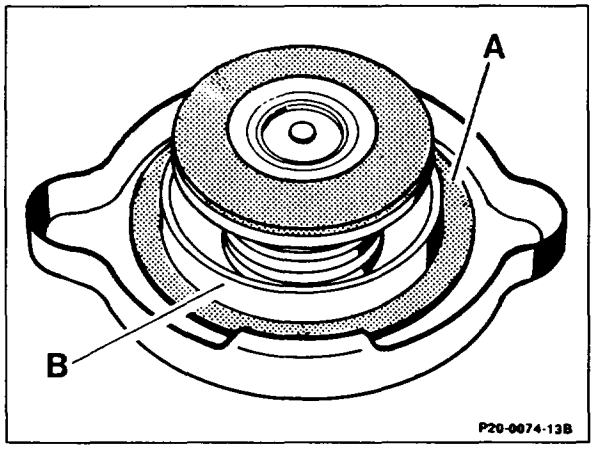

Testing pressure relief valve

1 Attach double union 000 589 73 63 00 to leaktightness tester 124 589 15 21 00.

2 Fit cooling system cap onto double union 000 589 73 63 00.

3 Test the opening pressure by pumping.

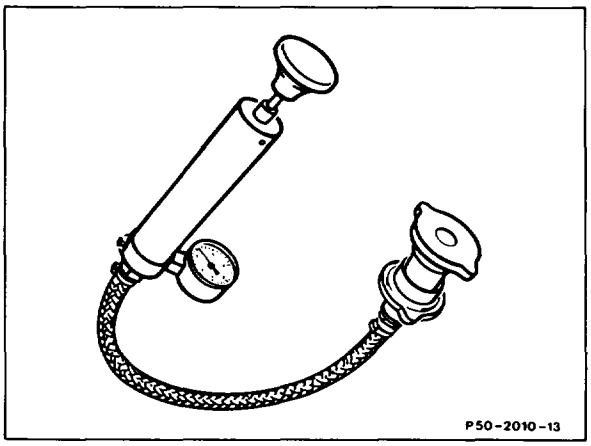

Testing vacuum valve

The vacuum valve (arrow) must be resting against the rubber seal; it should be possible to raise it slightly and, when released, it should spring back into place.

Note
Corroded (surface rust) expansion tank caps should be replaced.

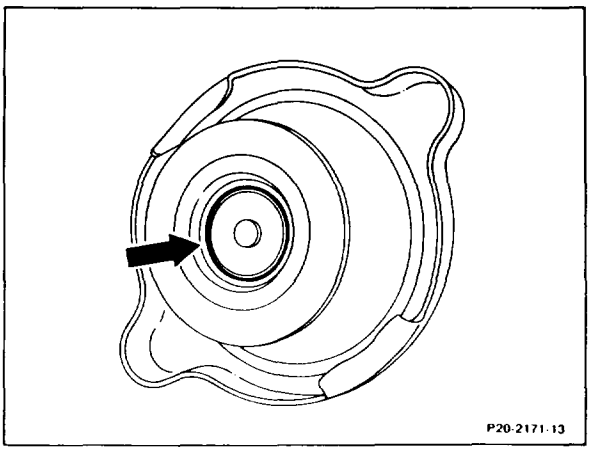

Models 107, 124, 126, 201

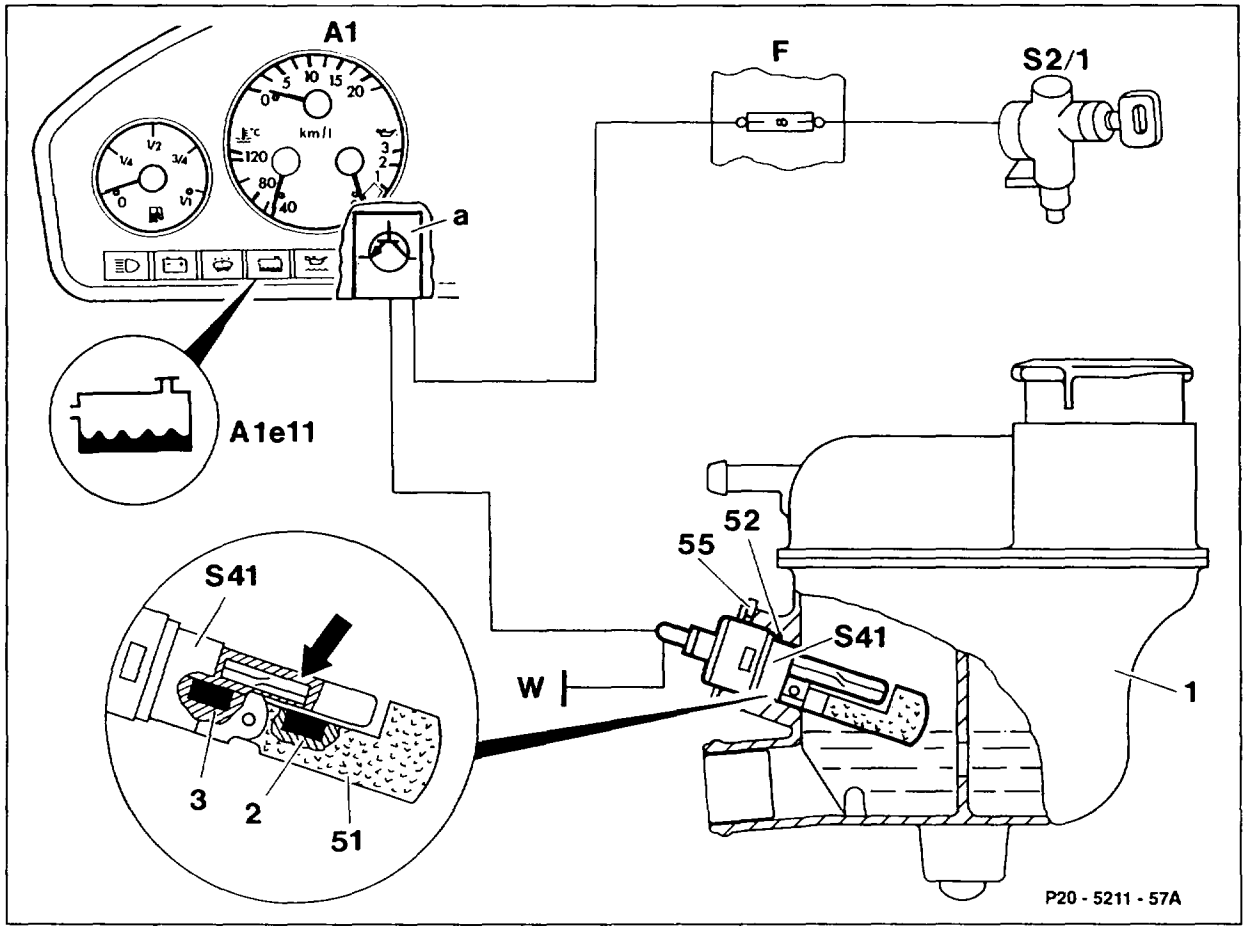

1	Expansion tank	A1e11	Coolant level indicator lamp
51	Float	a	Microprocessor (base plate)
52	O-ring	F	Fuse and relay box
55	Circlip	S41	Coolant level sensor
A1	Instrument panel	W	Ground

General

The coolant level gauge monitors the coolant level in the expansion tank (1) when the engine is running.

When the ignition is switched on, the indicator lamp (A1e11) lights up weakly (check function) and goes out as soon as the engine is started provided the coolant is at the correct level.

The coolant level sensor (S41) has two catches of different width and can only be installed in one position. It is sealed with an O-ring (52) and fixed in place by a circlip (55).

Operation

If the coolant is at the correct level, a permanent magnet (2) in the float (51) and a permanent magnet (3) in the sensor (S41) hold a contact (arrow) open.

If the coolant level is too low, the float (51) moves down and the permanent magnet (3) closes the contact (arrow) in the coolant level sensor (S41).

A permanent input signal (vehicle ground) is present at the microprocessor (a) in the electrical base plate of the instrument panel (A1) and the warning lamp (A1e11) lights up brightly.

Model 129

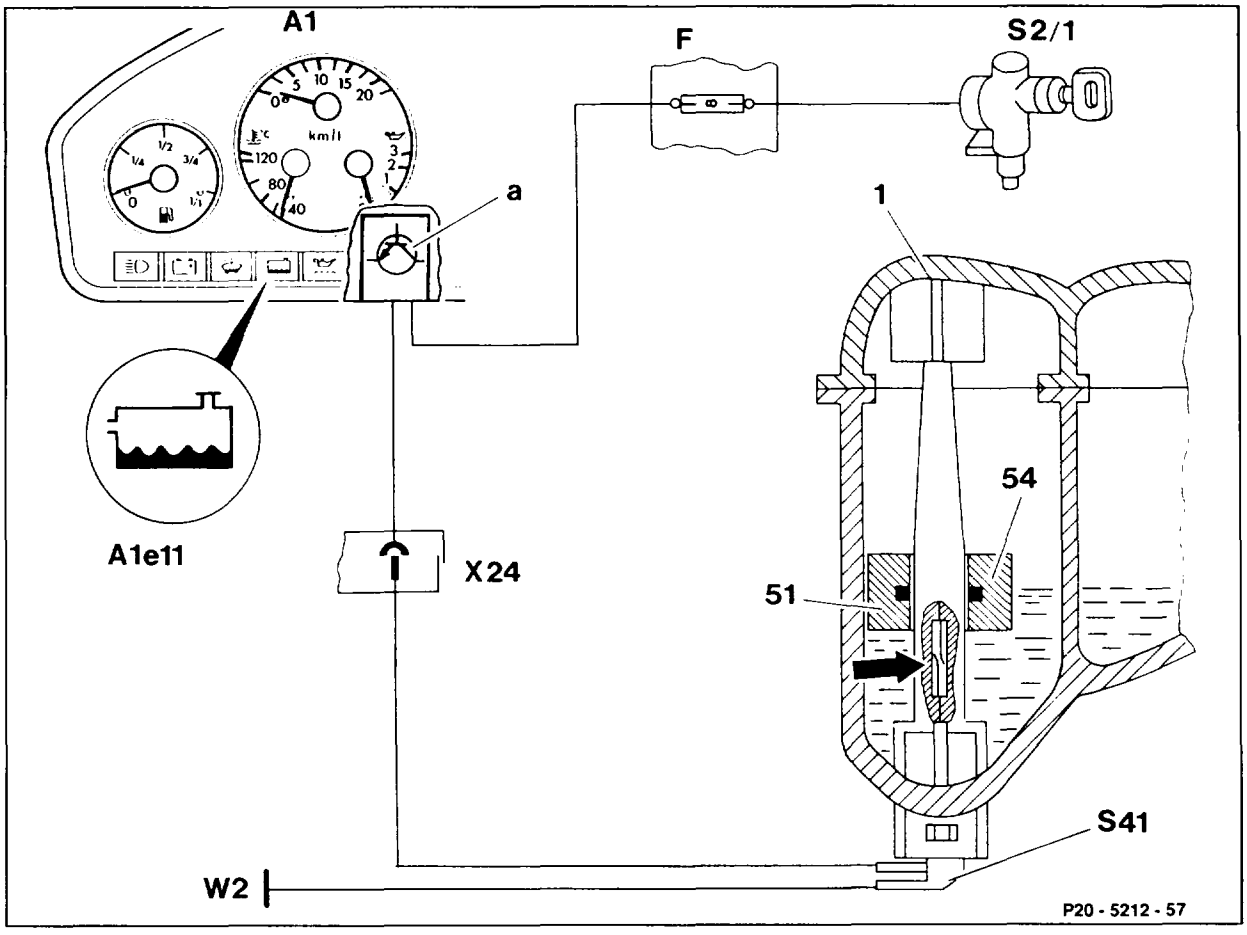

1	Expansion tank	F	Fuse and relay box
51	Float	S41	Coolant level sensor
54	Ring magnet (permanent magnet)	W2	Front right ground (at headlamp unit)
A1	Instrument panel	X24	Plug connection, headlamp harness
A1e11	Coolant level warning lamp		
a	Microprocessor (base plate)		

General

In model 129 the coolant level sensor (S41) is not directly based with coolant and can be removed and installed without draining the coolant in the expansion tank (1).

Operation

If the coolant level is too low, the ring magnet (54) in the float (1) closes the contact (arrow) in the coolant level sensor (S41).
A permanent input signal (vehicle ground) is present at the microprocessor (a) in the electrical base plate of the instrument panel (A1) and the warning lamp (A1e11) lights up brightly.

20–4500 Removing and installing expansion tank

Preceding work:
Warning instructions when hood open (01-0085).

Operation no. of operation texts and work units or standard texts and flat rates

A. Models 124, 201

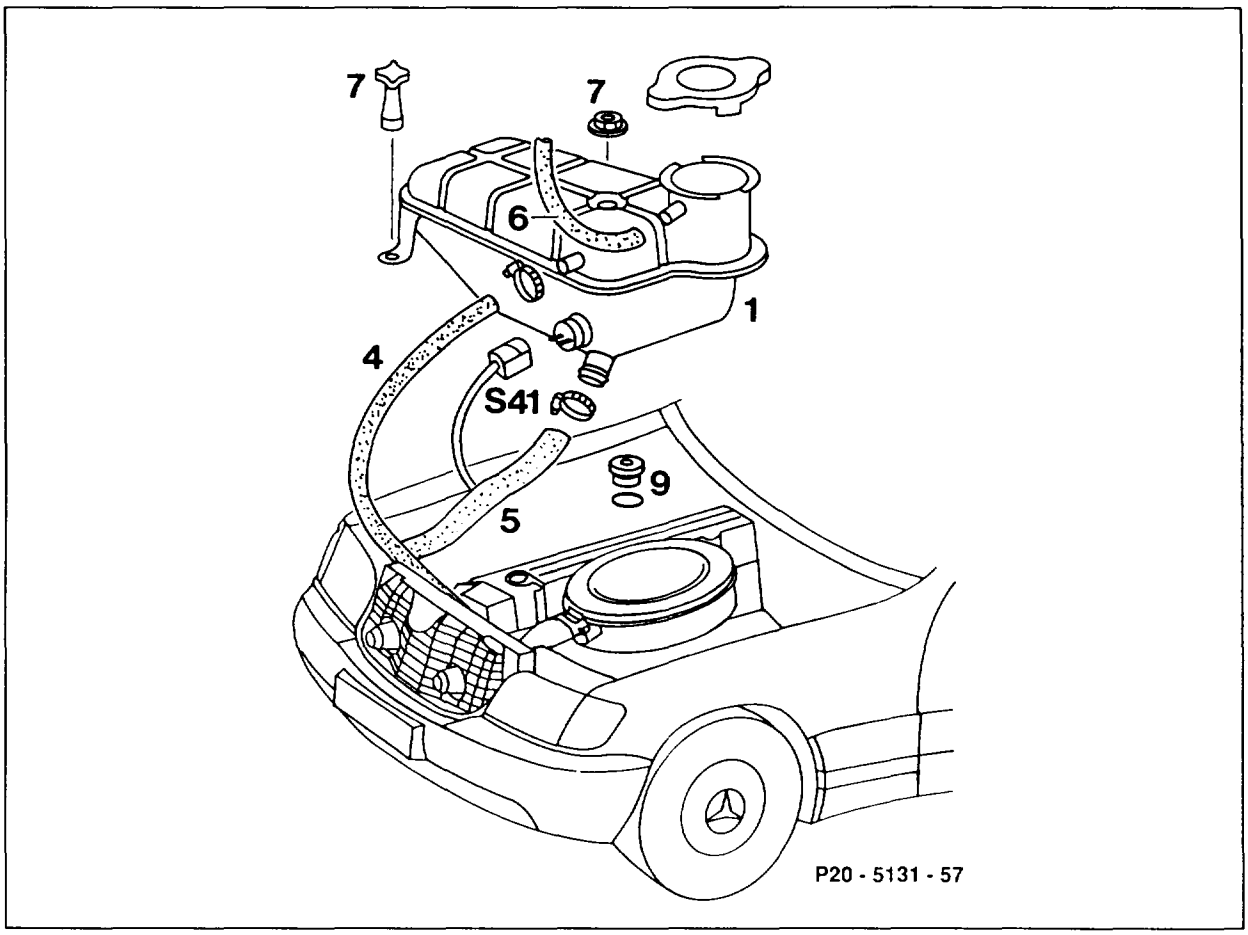

Cap of expansion tank (1)	open (release pressure).
Coolant	drain (until expansion tank is empty), pour into system (20–0100).
Connector of plug connection (S41) of coolant level gauge	unplug, plug in.
Coolant hoses (4), (5)	disconnect, connect.
Coolant hose (6) to overflow tank	detach, fit on.
Nuts (7) or lever nut, model 201	unscrew, screw on.
Expansion tank (1)	remove, install.

⚠
Pay attention to rubber mount (9) of expansion tank (1).

Preceding work:
Warning instructions when hood open (01–0085).

Operation no. of operation texts and work units or standard texts and flat rates

B. Model 129

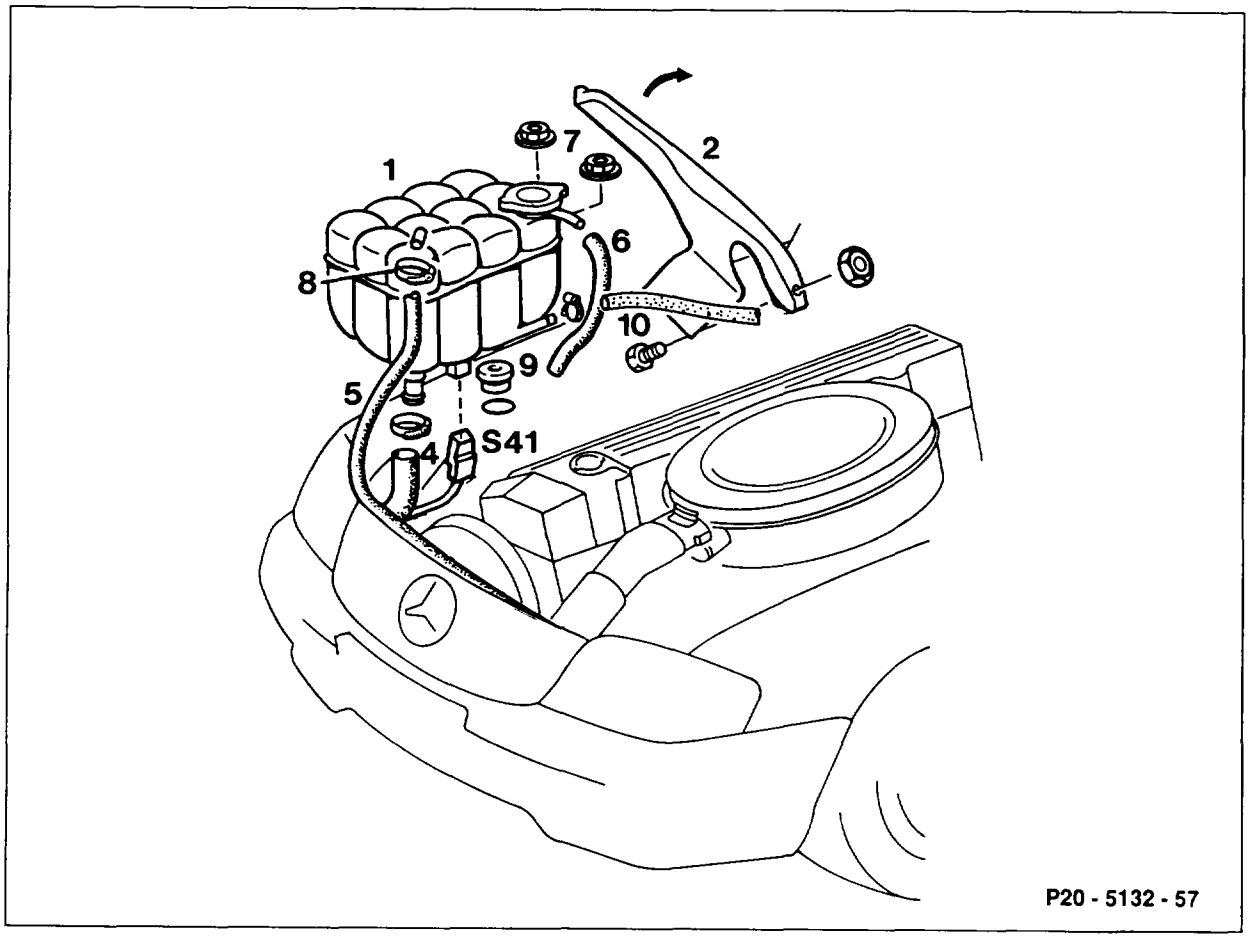

Cap of expansion tank (1)	open (release pressure).
Coolant	drain (until expansion tank is empty), pour into system (20–0100).
Cover (2)	unscrew, lift up, install.
Connector of plug connection (S41) of coolant level gauge	unplug, plug in.
Coolant hoses (4), (5)	disconnect, connect.
Coolant hose (6) to overflow tank	detach, fit on.
Vent line (10) (if fitted)	take off, fit on, see note.
Nuts (7)	unscrew, screw on.

Expansion tank (1)	remove, install.

⚠

Pay attention to rubber pad (9) of expansion tank (1).

Note

As of vehicle ident end no. 001 950 an expansion tank with the identification 129 500 03 49 (previously 129 500 01 49) on the top of the tank has been fitted.
This tank has a modified vent connection which ensures improved venting of the cooling system.
When performing repairs, install this tank.

As of vehicle ident end no. 022 921 an expansion tank with a vent line to the heating system has been installed.

20–4540 Removing and installing overflow tank

Operation no. of operation texts and work units or standard texts and flat rates

A. Models 124, 126, 201

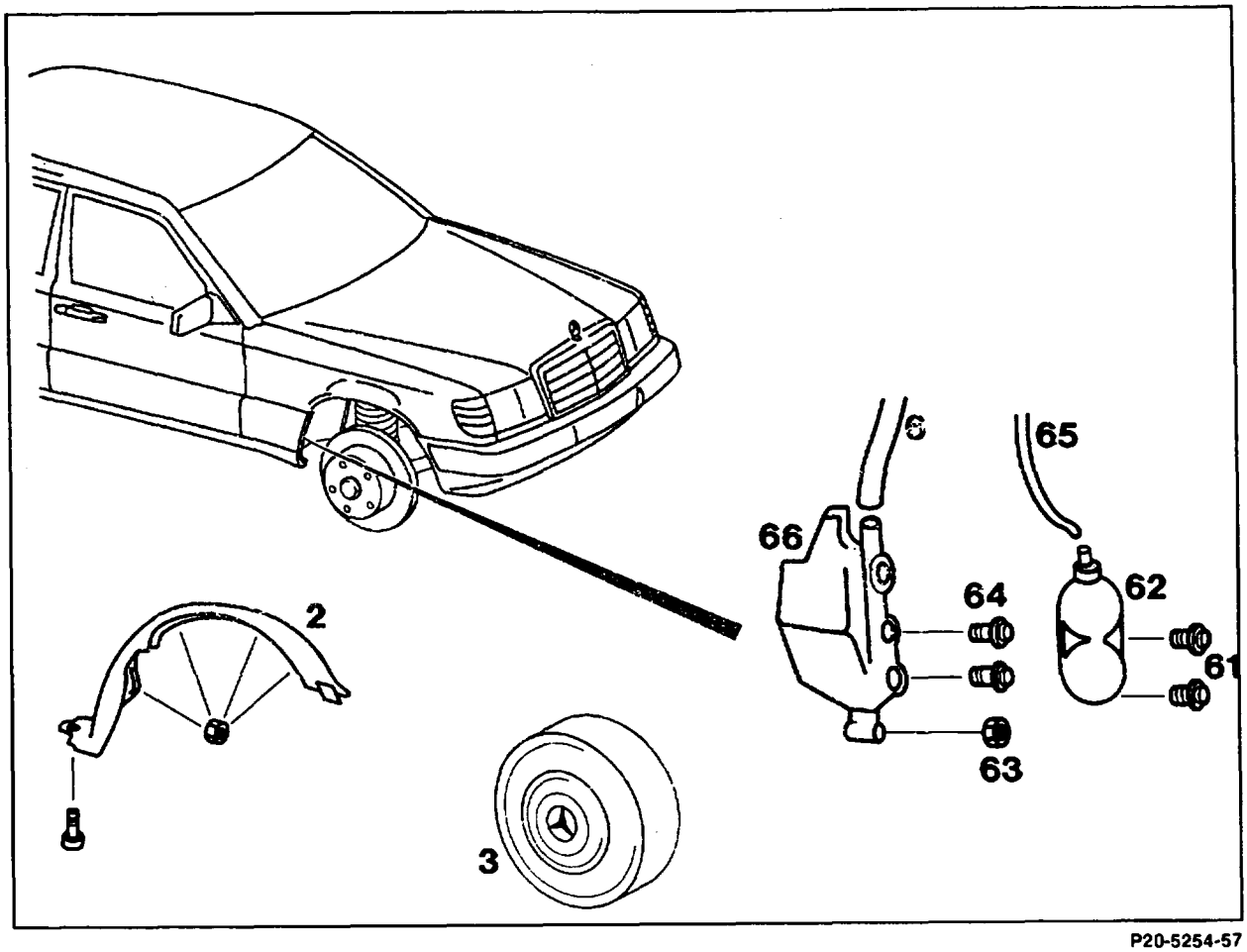

P20-5254-57

Shown on model 124

Front right wheel (3)	take off, fit on
Partition (2) below front right wheelhouse	remove, install
Bolts (61)	unscrew, screw on
Vacuum hose (65)	detach, fit on
Model 124: vacuum reservoir (62)	remove, install
Nut (63) and bolts (64)	unscrew, screw on
Coolant hose (6)	detach, fit on
Overflow tank (66)	remove, install

B. Model 129

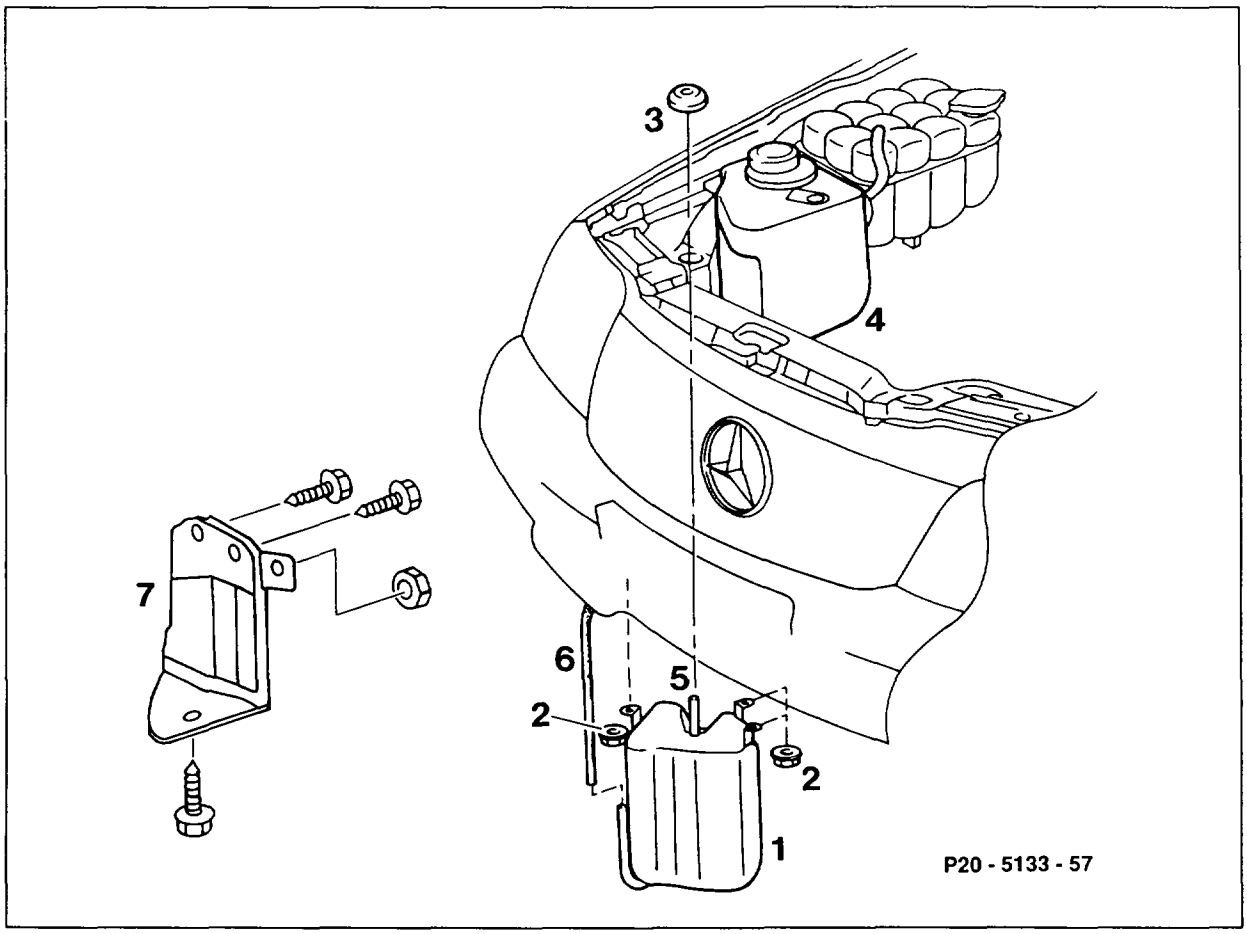

Vehicle	drive onto platform or over inspection pit.
Front right trim (7)	remove, install.
Coolant hose (6)	detach from overflow tank, fit on.
	⚠ When removing the overflow tank (1), protective cap (3) of air intake connection (5) remains positioned next to windscreen washer reservoir (4).
Protective cap (3)	fit on.

22-2110 Removing and installing front engine mounts

Preceding work:
Warning instructions when hood open (01-0085).
Bottom engine compartment panel removed (Maintenance Manual Volume 2, Op. no. 6190).

Models 107, 124, 124 4MATIC, 126, 201

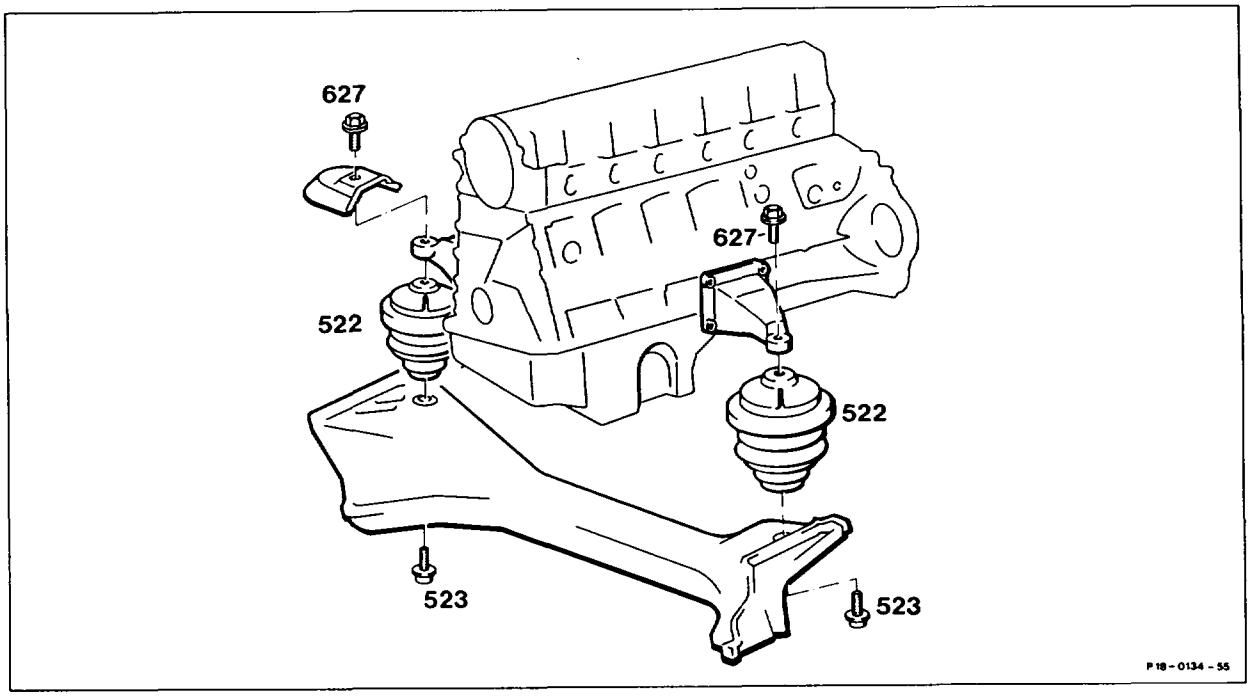

Ground cable at battery	detach, attach (step 1).
Air scoop	remove, install (step 2).
Fan shroud	detach, attach (step 3).
Bolts (627)	unscrew, screw in, 55 Nm (steps 4 - 5).
Engine	raise, lower (step 6).
Bolts (523)	unscrew, tighten, Model 124, 201 40 Nm, Model 107, 126 70 Nm, (step 7).
Engine mounts (522)	remove, install (step 8).
Installation	in the reverse order.

Tightening torques in Nm

Hexagon socket screw for engine mount to frame cross member, Model 124, 201	40
Hexagon socket screw for engine mount to frame cross member, Model 107, 126	70
Hexagon bolt for engine mount to engine support	55

Notes

Modifications to engine mount and engine shock absorber

Modified engine mounts, shield and engine shock absorber with additional protective hose are fitted.

These measures reduce stuttering and vibrations when engine idling.

Identification: modified part number (see table).

Production breakpoint: 10/1985

Designation	Present Part No.	Previous Part No.
Right engine mount	123 241 52 13	124 241 12 13
Left engine mount	123 241 50 13	123 241 09 13
Right shield	123 241 11 34	126 241 04 34
Engine shock absorber	126 240 02 48	123 240 23 48 with white dot
Protective hose	126 241 00 33	–

Production breakpoint: 10/1986

Model	Engine	Engine End No.		Vehicle Ident End No.	
		manual transmission	automatic transmission	A	F
126.026	103.941	*	*	*	*
126.024 126.025	103.981	*	*	289105	*

* not recorded

Modifications to shield for right engine mount

The shape of the shield has been modified. It is provided with a recess (arrow) for the locating lug on the engine mount.

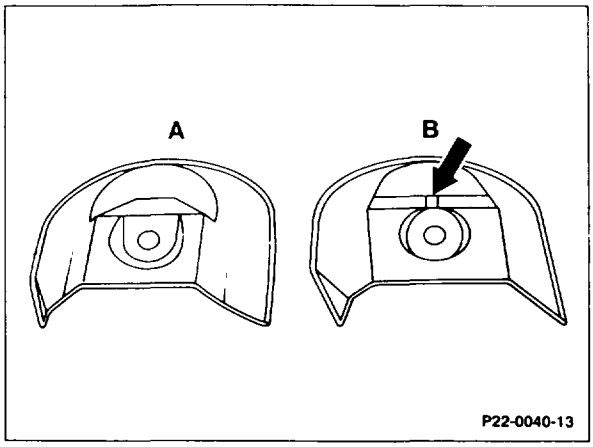

A Previous version
B Present version

Shield, production breakpoint: 03/1988

Model	Engine	Engine End No.		Vehicle Ident End No.	
		manual transmission	automatic transmission	A	F
124.026	103.940	019887	044280	*	*
124.030 124.050 124.090	103.983	021817	113910	*	*
201.029	103.942	009488	013000	*	*

* not recorded

Material modifications to front engine mount

Use of a higher damping rubber blend has produced improved strength.

Production breakpoint: 07/1989 (without air conditioning or automatic climate control)

Model	Engine	Engine End No.		Vehicle Ident End No.	
		manual transmission	automatic transmission	A	F
124.026	103.940	027368	068696	*	*
124.030 124.050 124.090	103.983	032118	175999	*	*
201.029	103.942	014824	033294	*	*

* not recorded

Engine mount material, prod. breakpoint: 07/1989 (with air cond. or autom. climate control)

Model	Engine	Engine End No.		Vehicle Ident End No.	
		manual transmission	automatic transmission	A	F
124.026	103.940	*	068978	*	*
124.030 124.050 124.090	103.983	*	175887	*	*
201.029	103.942	*	033259	*	*

* not recorded

Dimensional modification to front engine mounts

2 mm higher engine mounts are installed at the front. In addition, recesses (arrow) are provided on the bottom of these engine mounts and lugs on the engine supports. This enables the engine mounts to be installed free of stress.

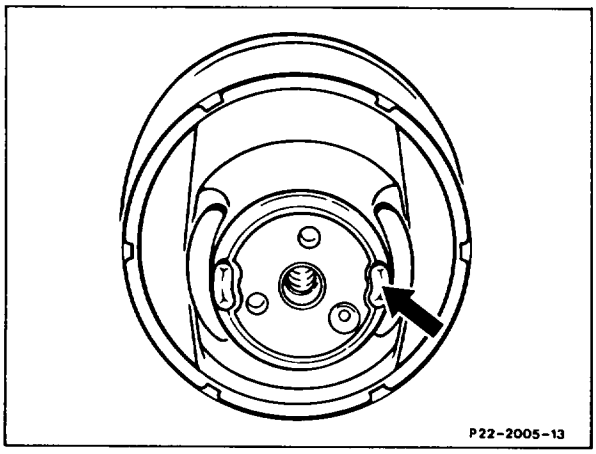

The modified engine mounts can likewise be fitted to cars manufactured prior to this date.

Engine mounts of the previous and modified versions must not be installed together.

Model 124, 201

Production breakpoint
for engine mounts: 02/1989
Production breakpoint
for engine supports: 08/1989

Modification to shield for front engine mounts

The shape of the shield for the front engine mount has been modified.

Shield, production breakpoint: 01/1990

Model	Engine	Engine End No.		Vehicle Ident End No.	
		manual transmission	automatic transmission	A	F
129.060	103.984	000175	000653	*	*

* not recorded

Modification of shield for right engine mount, Model 126

The shield has been standardized with that used on engines 116 and 117.

Shield, production breakpoint: 02/1987

Model	Engine	Engine End No.		Vehicle Ident End No.	
		manual transmission	automatic transmission	A	F
126.020	103.941	*	*	*	*
126.024 126.025	103.981	*	*	318672	*

* not recorded

Special tool

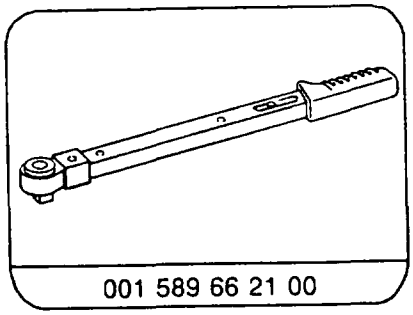

Removal, installation

1 Detach ground cable at battery.

2 Detach air scoop from air filter.

3 Remove fan cowl and place over the fan.

Installation instruction
Introduce catches into the mounts on the radiator.

4 Unscrew bolts (627) on right engine mount from above.

Note
A shield (626) is installed above the right engine support.

Installation instruction
Tightening torque 55 Nm.

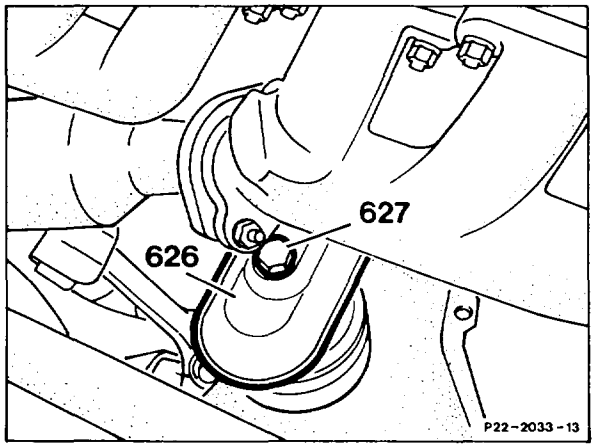

5 Unscrew bolt (627) at the left engine mount.

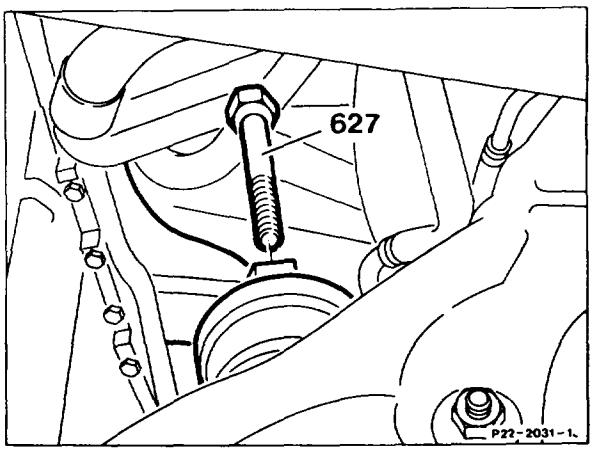

Installation instruction
Tightening torque 55 Nm.

Models 124, 201
Installation instruction
Anti-twist lock (632) on left and right engine mounts must engage into the retaining slot (631) of the engine support.

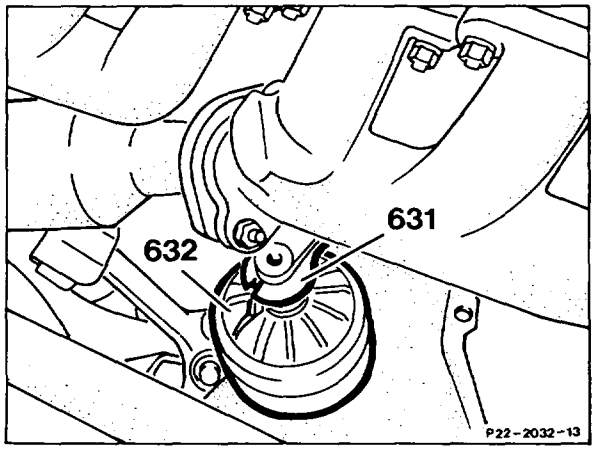

6 Attach engine to the front suspension lug and raise slightly. Pay attention to the rear suspension lug, oil filter and coolant hoses.

7 Remove screws (523) on the left and right front engine mounts from below.

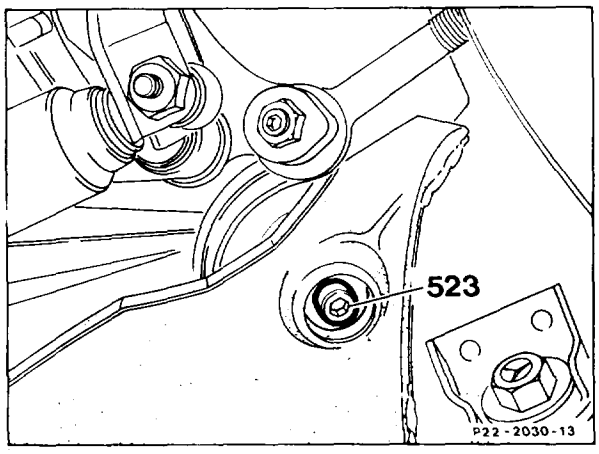

4MATIC
Remove 2 bolts (arrow) from below.

Installation instruction
Tightening torques
Model 124, 201 40 Nm,
Model 107, 126 70 Nm.

8 Take out engine mount.

Note
The engine mounts on the left and right are identical.

Installation is performed in the reverse order.

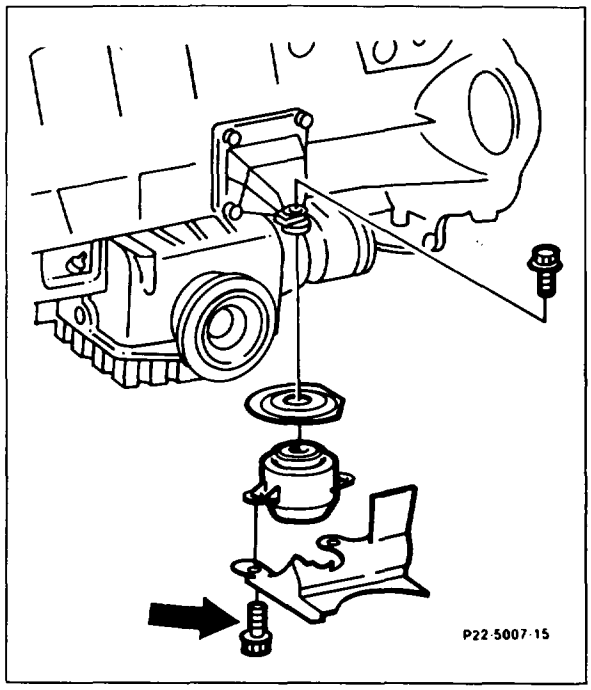

Adjust engine stop

2291.10

Engine 616 617.91

Torque specifications	Nm
Adjusting bolt (2) on front engine stop	130
Adjusting bolt (11) on rear engine mount	30

Special tools

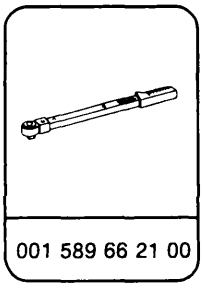

001 589 66 21 00

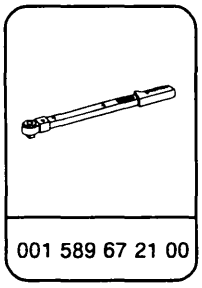

001 589 67 21 00

Locally fabricated tools

Gauge for adjusting front engine stop

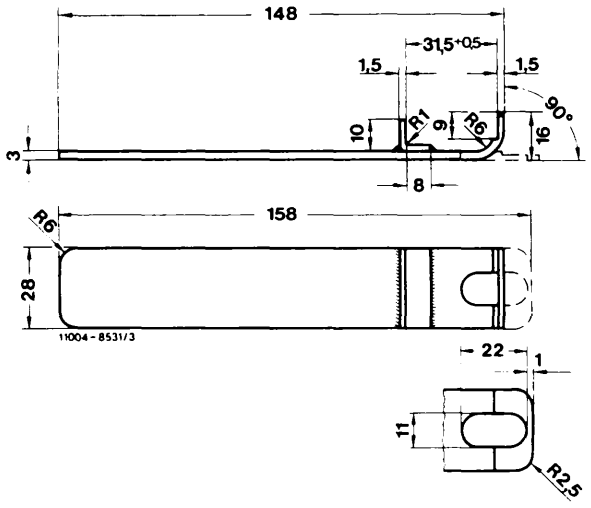

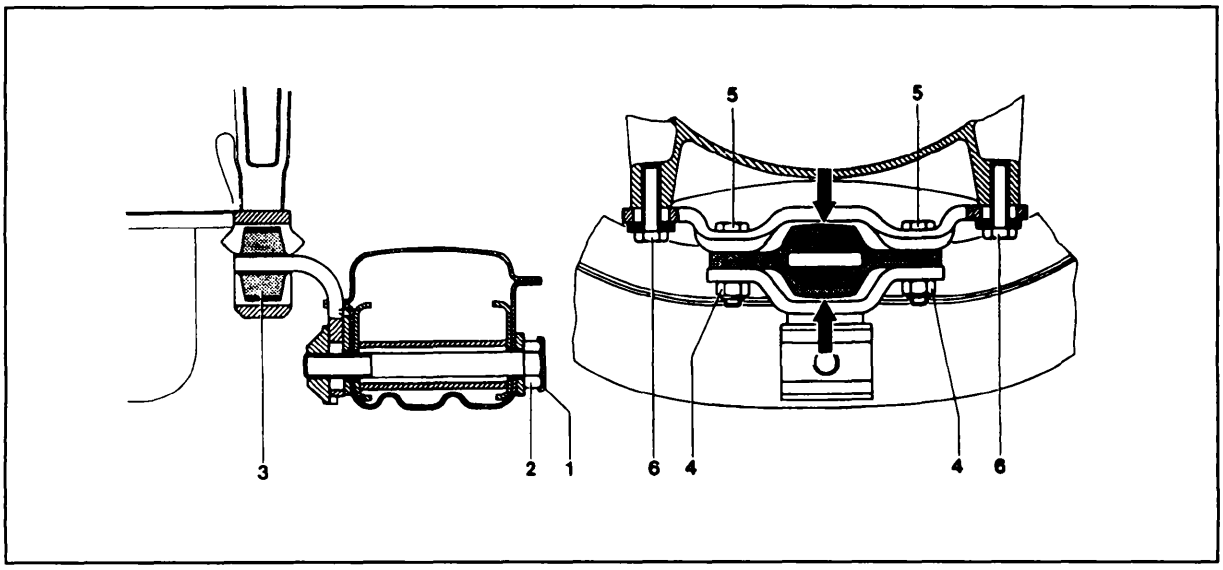

Front engine stop

Note: The vehicle weight must rest on the suspension.

On engine 617.91 loosening and retightening of bolts on front engine stop is not required.

- Turn steering wheel to full lock, either right or left.
- Lift lock (1) on front engine stop and move aside. Completely loosen adjusting bolt (2). Make sure that engine stop is not stuck to frame crossmember due to wax or paint.

- Completely loosen adjusting bolt (11) on rear engine mount.
- Place fabricated gauge (01) on front engine stop.
- Shake engine from side to side by hand.

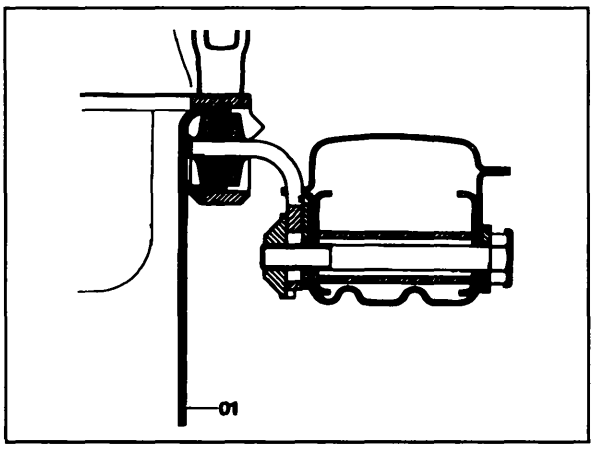

- Tighten adjusting bolt (11) on rear engine mount.
- Tighten adjusting bolt (2) on front engine stop and secure with lock (1).
- Remove fabricated gauge.

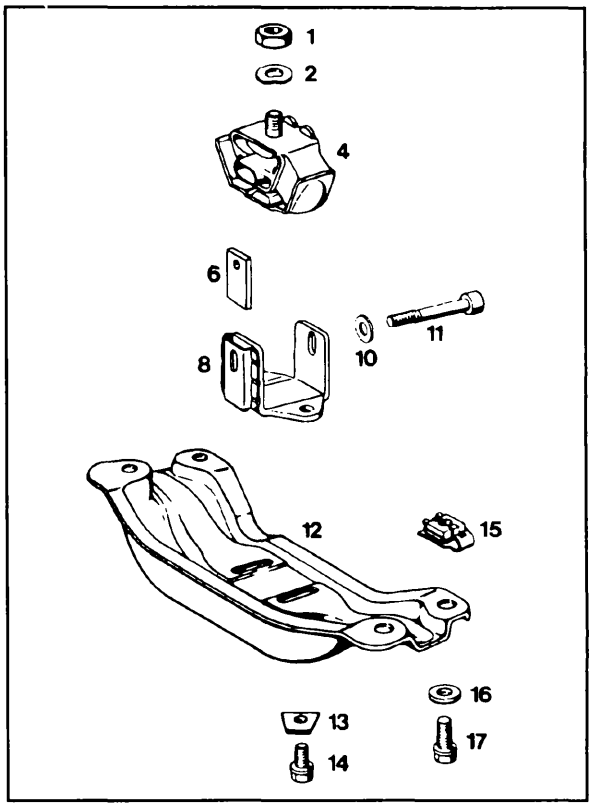

Rear engine mount with engine stop
Version: 4 & 5 cylinder models with automatic transmission

Engine 103 in model 124 with 4MATIC

Torque specifications (Nm)

Adjusting screw (140) on rear mount (reference value)	45

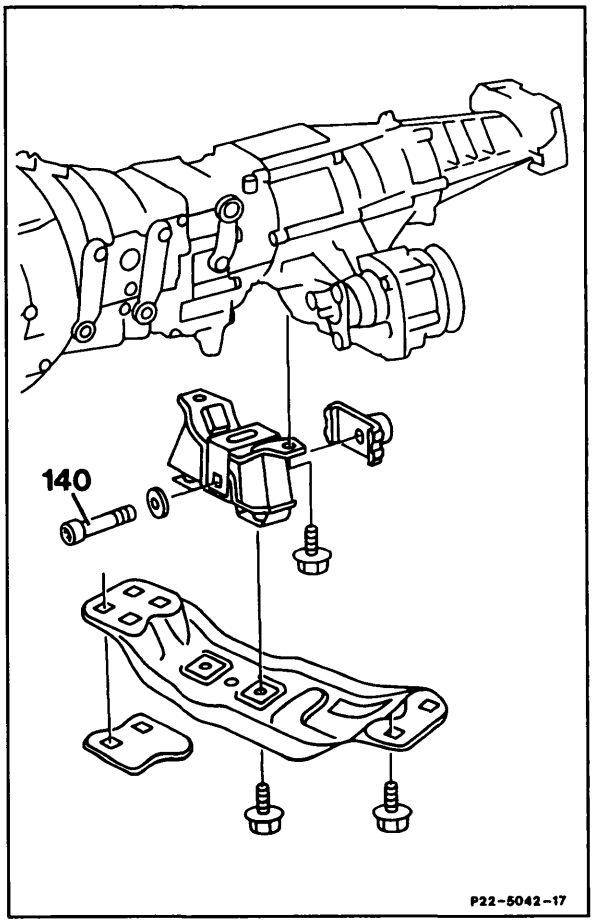

- Completely loosen adjusting bolt (140) on rear engine mount.
- Start engine and depress gas pedal several times to rock engine to adjust engine stop.
- Tighten adjusting bolt (140) on rear engine mount to 45 Nm.

22–2115 Checking, stress-relieving front engine mounts

Preceding work:
Bottom engine compartment panel removed (Maintenance Manual Volume 2, Op. no. 6190).

Model 124 (except 124.034 and 134.036)
Model 201 (as of 10/84)

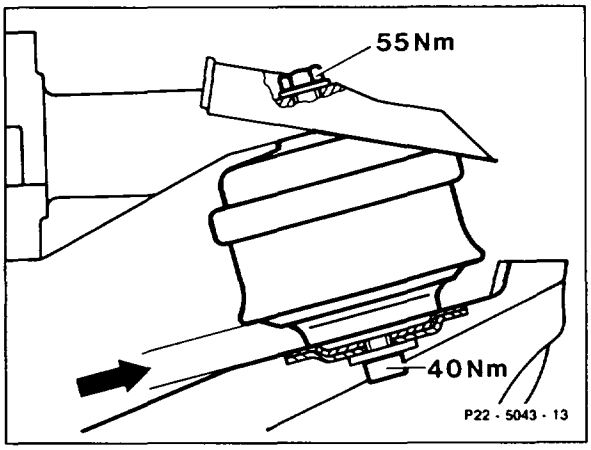

Checking

Gauge (shop-made) or bolt head (waf 13)	push through between engine mount and cross member (arrow). If gauge cannot be pushed through, the engine mount has settled too much and has to be replaced (22-2110). If the gauge can be pushed through and if a noise problem exists (eg. droning, rumbling), stress-relieve engine mounting.

Stress-relieving

Bolts for rear engine mount at engine carrier	unscrew (22-2120)
Exhaust bracket at transmission	detach
Exhaust at exhaust manifold	unbolt
Top and bottom bolts of front engine mounts	slacken
Engine	raise until engine mounts are free
Engine	lower
Top and bottom bolts of front engine mounts	tighten (22-2110)
Rear engine mount	aline. Allow transmission to balance, tighten bolts (22-2120)

Exhaust	bolt to exhaust manifold; tighten bolts evenly.
Bolts of exhaust bracket to transmission	tighten

Special tools

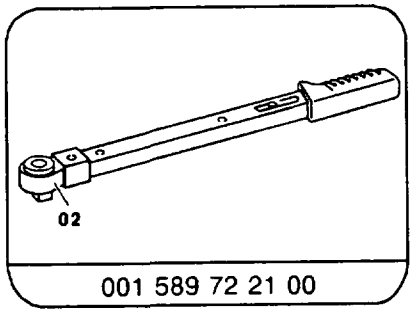

Shop-made tool

Gauge

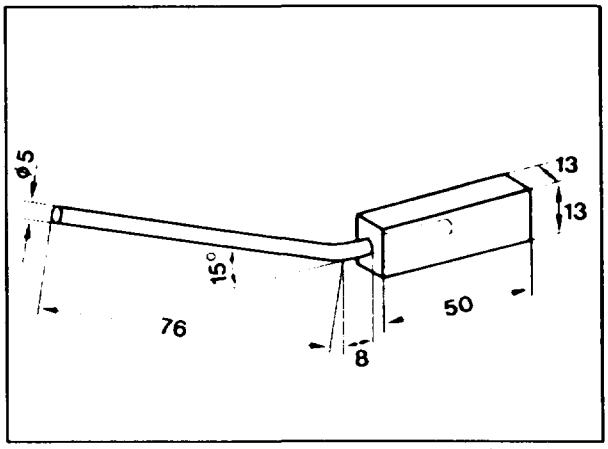

22-2120 Removing and installing rear engine mount

Operation no. of operation texts and work units or standard texts and flat rates

A. Model 124 4MATIC

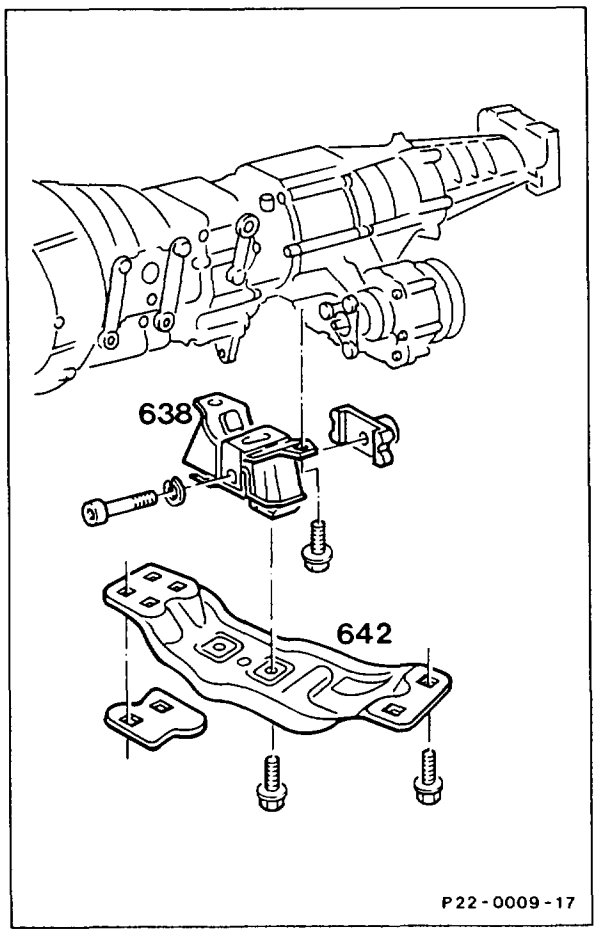

Transmission	support.
Engine carrier (642)	remove, install, (M8) 20 Nm, (M10) 40 Nm.
Engine mount (638)	remove, install.
Installation	in the reverse order.

Note

If the rear engine mount on 4MATIC models is replaced, the engine stop must be slackened after driving about 1000 km and 10000 km, respectively (22-2200).

B. Model 124

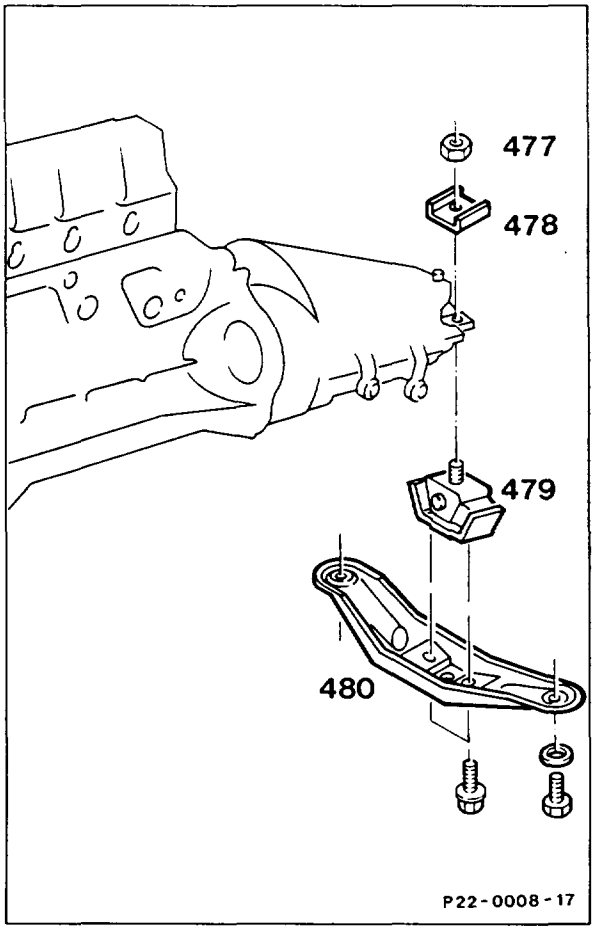

Model 124 USA (retrofitting)

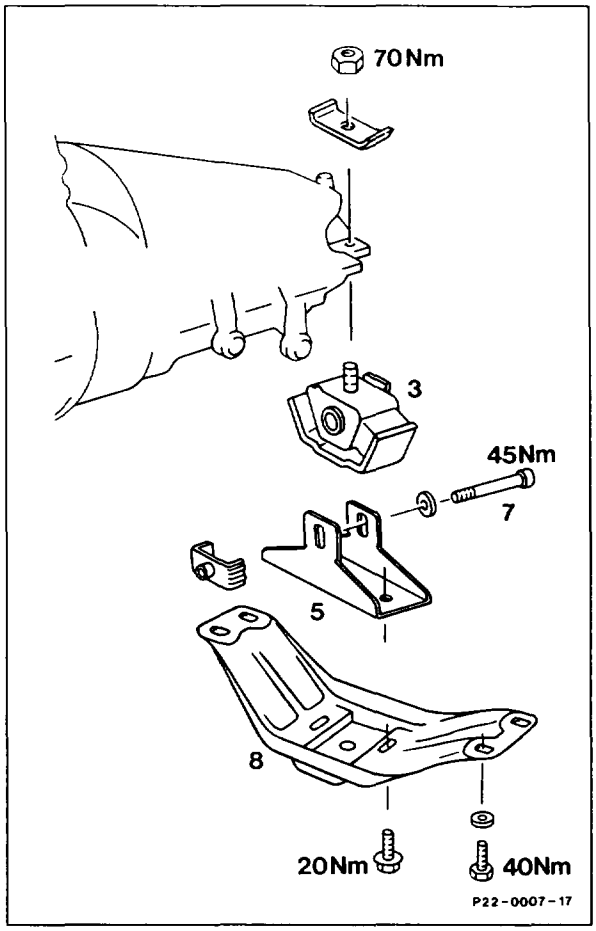

Transmission	support.
Engine carrier (480) or (8)	remove, install, (M8) 20 Nm, (M10) 40 Nm.
Engine mount (479) or (3) with bracket (5)	remove, install, nut (477) or (1) 70 Nm, bolt (7) 45 Nm.
Installation	in the reverse order.

Note

If the rear engine mount with stop limiter (freeway-hop) is replaced the engine stop must be adjusted after driving about 1000 km and about 10000 km (22-2130).

C. Models 107, 126, 201

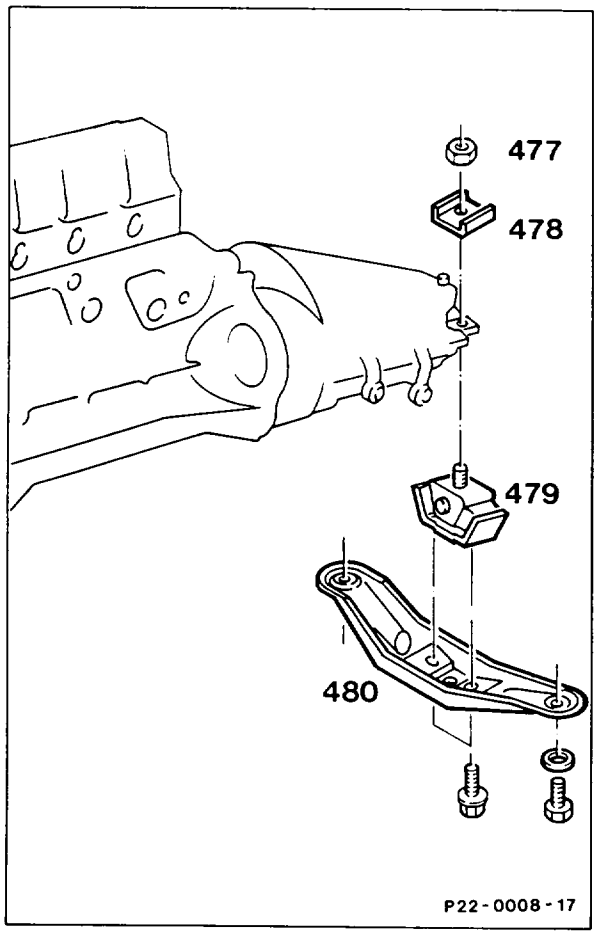

Transmission	support.		
Engine carrier (480)	remove, install,	(M8)	20 Nm,
	Models 107, 126	(M10)	45 Nm,
	Model 201	(M10)	40 Nm.
Engine mount (479)	remove, install, nut (477)		70 Nm.

Notes

Modification to rear engine carrier

The sheet metal thickness of the rear engine carrier has been increased from 2 mm to 2.5 mm.

Identification: recess (arrows) on outer edge of engine carrier.

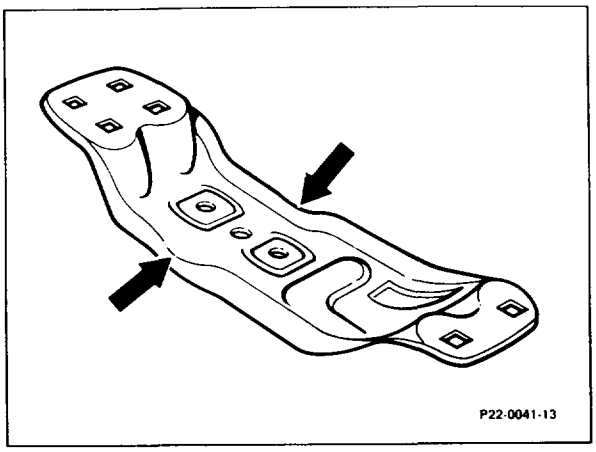

Thickness of engine carrier material, production breakpoint: 08/1987

Model	Engine	Engine end no.		Vehicle ident end no.	
		manual transmission	automatic transmission	A	F
124.226	103.940	*	*	*	*
124.230 124.290	103.983	*	*	552574	047874

* not recorded

Different securing bolt for engine mount to rear engine carrier

A bolt head with internal torx (previously hexagon socket) is used.

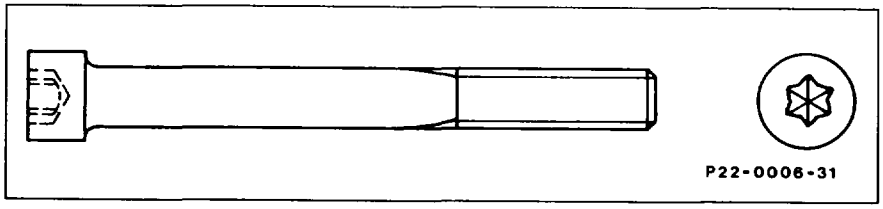

Internal torx securing bolt, production breakpoint: 10/1985

Model	Engine	Engine end no.		Vehicle ident end no.	
		manual transmission	automatic transmission	A	F
124.226	103.943	000385	000928	*	*
124.230 124.290	103.985	001824	006698	*	*

* not recorded

D. Model 129

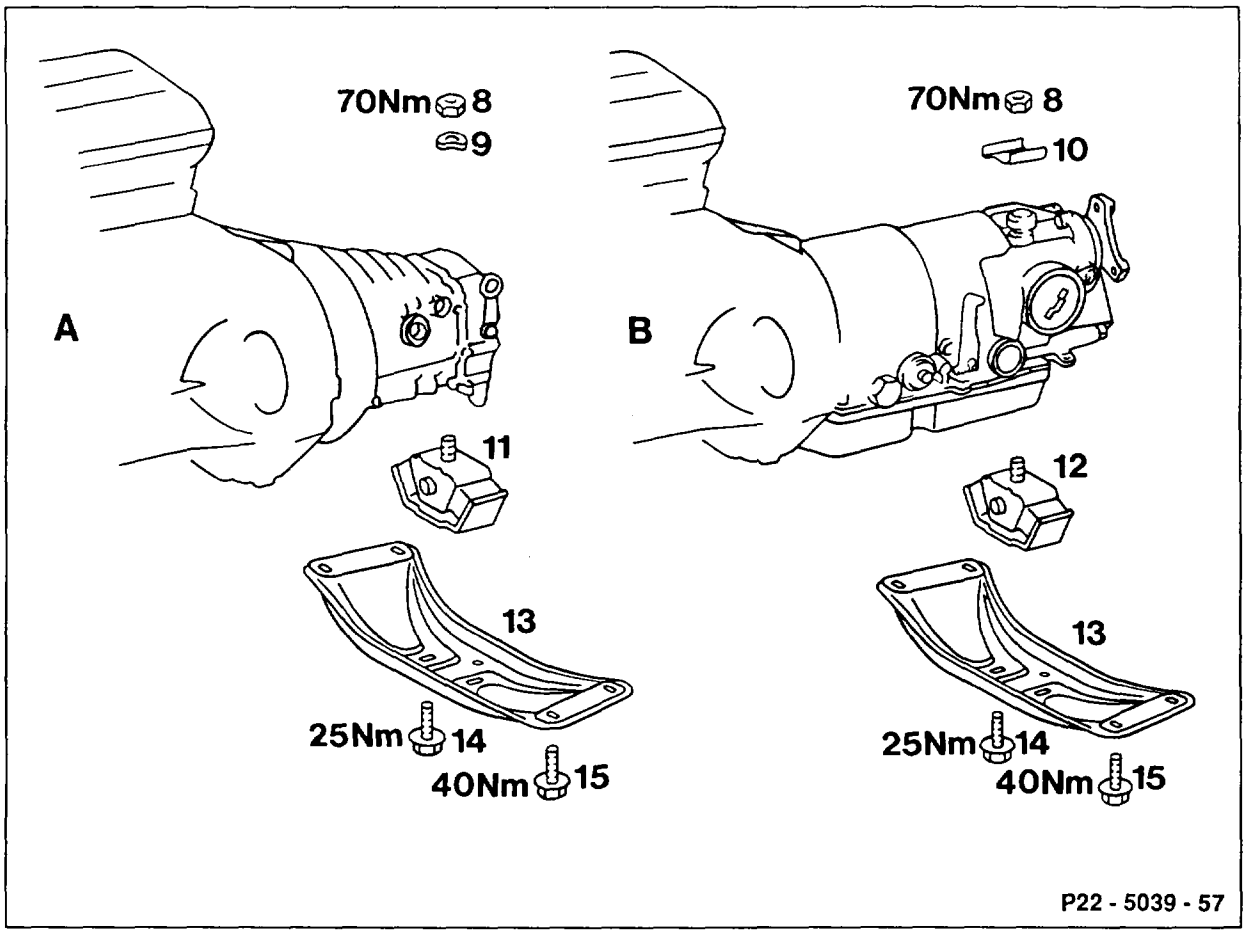

A Manual transmission
B Automatic transmission

Transmission	support.	
Automatic transmission: cable straps of cable of kickdown switch at engine carrier (13)	slacken, tie.	
Engine carrier (13)	remove, install,	M8 25 Nm, M10 40 Nm
Engine mount (11 or 12)	remove, install (70 Nm).	
Washer (9) or pad (10)	note.	

22-2130 Adjusting rear engine mount (freeway-hop), model 124 USA

Operation no. of operation texts and work units or standard texts and flat rates

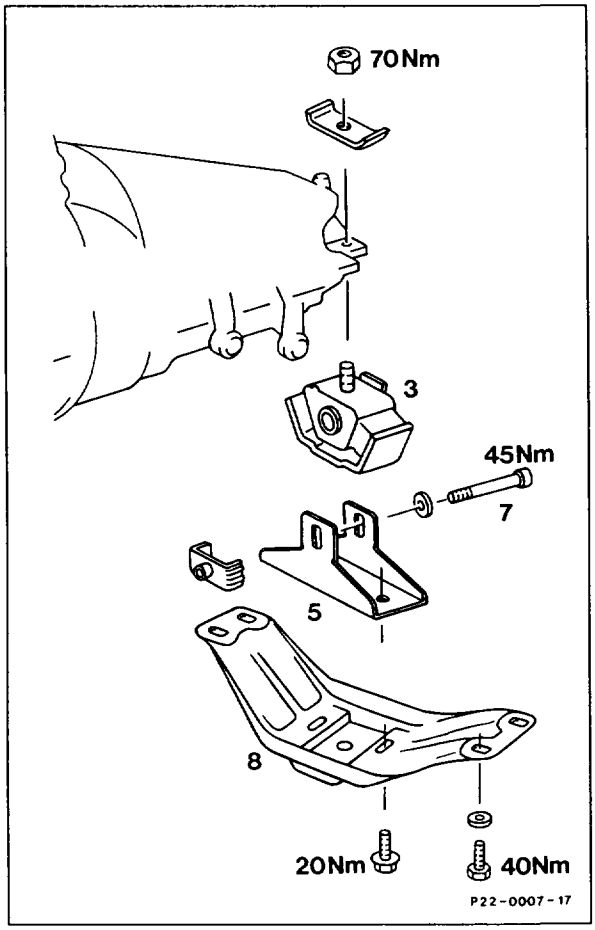

1	Flat nut	7	Adjusting screw 10.9
2	Packing	8	Engine support
3	Engine mount		
4	Nut		
5	Bracket		
6	Washer		

Adjusting

Adjusting screw (7)	slacken completely at rear engine mount.
Engine	move by hand by shaking back and forward.
Adjusting screw (7)	tighten, 45 Nm.

Note

The rear engine mount with variable engine stop and higher load carrying capacity can be installed if complaints are received regarding engine vibration on roads with joints running across (freeway-hop).

If this engine mount is installed, the engine stop must be set after approx. 1000 and after 10000 km distance.

22–2140 Engine bearing cooling, model 201 (retrofitting)

Preceding work:
Bottom engine compartment panel removed
(Maintenance Manual 6190).

Model 201
not with underbody protection
not with auxiliary heater

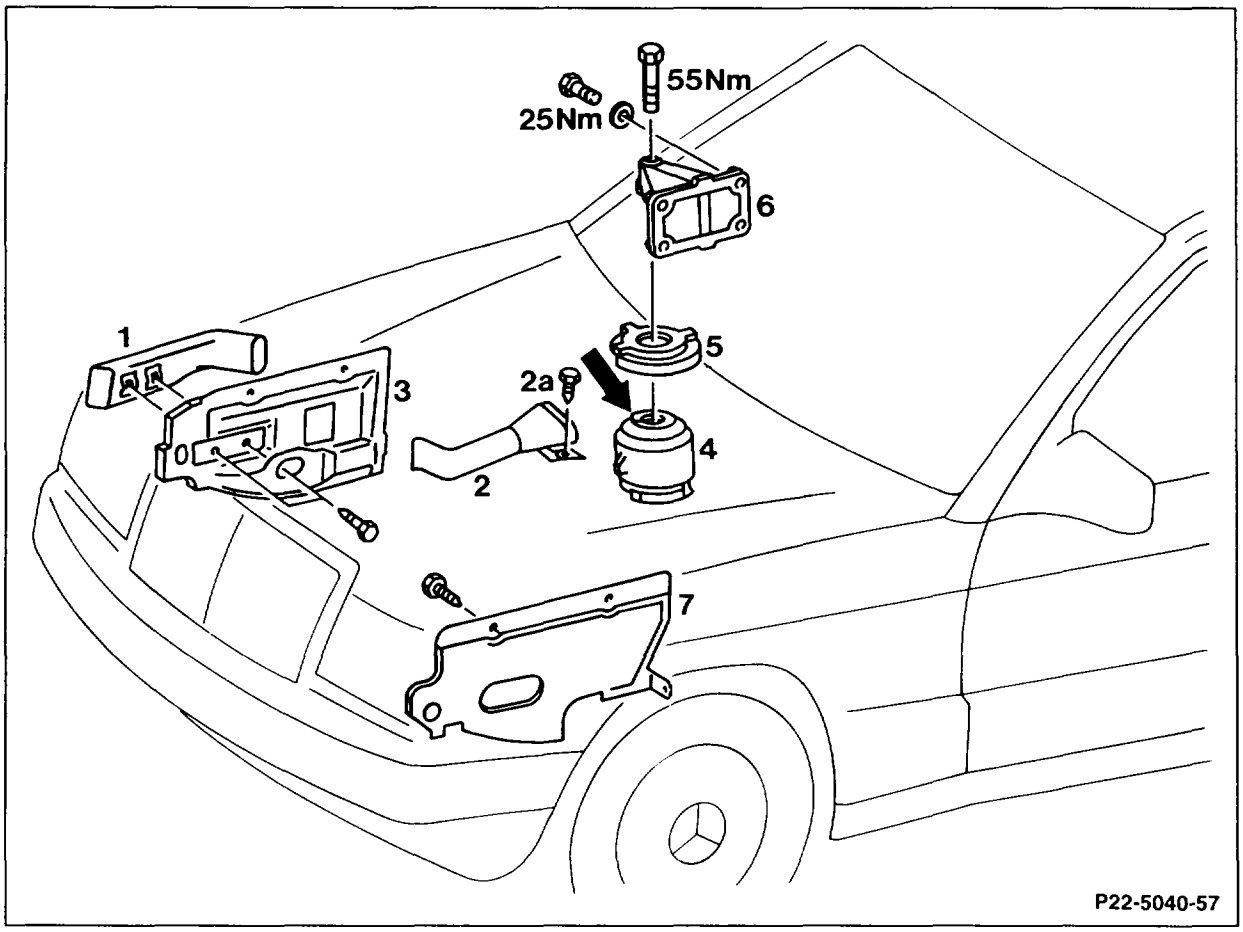

Fan shroud ring	remove, place over fan, install (20–3400).
Intake air cowl	remove, install (09–0060).
Torsion bar of side member	slacken, fold down, install.
Both engine mounts at bottom	unscrew, screw on (25 Nm).
Engine	raise, lower.
Right engine carrier (6) and shield (5)	remove, replace, install.
Right engine compartment encapsulation (3) with cooling pipe (1)	fit parts, install.

Right cross member for bolt (2a)	mark and drill 3.5 mm dia.
Cooling pipes (1) and (2)	fit together.
Cooling pipe (2)	attach to right cross member with bolt (2a).
If air conditioner fitted: bracket of left air conditioner line	unscrew, screw on.
Left engine compartment encapsulation (7)	install.
Note USA model: engine compartment encapsulations (3) and (7)	are fitted as standard.

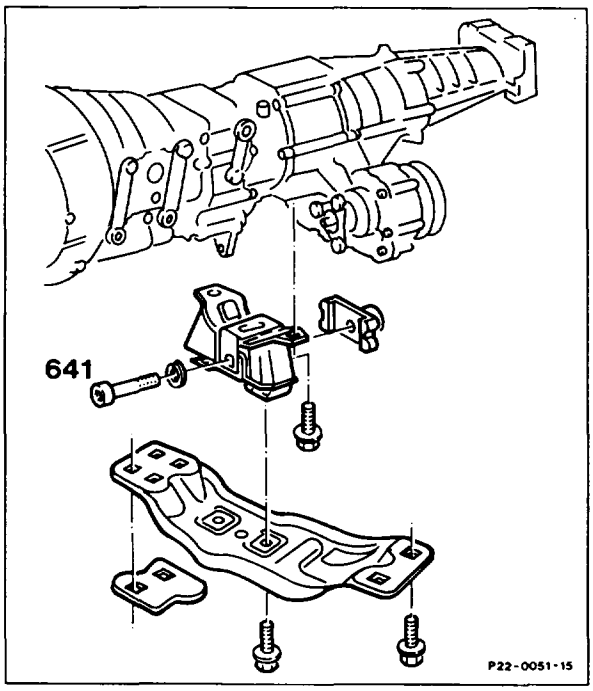

Screw (641)	slacken.
Engine	start, depress accelerator pedal sharply several times to allow engine stop to adjust.
Screw (641)	tighten, 45 Nm.

22–2500 Removing and installing engine carrier

Preceding work:
Bottom engine compartment panels removed
(Maintenance Manual 6190).

Models 124, 129, 201

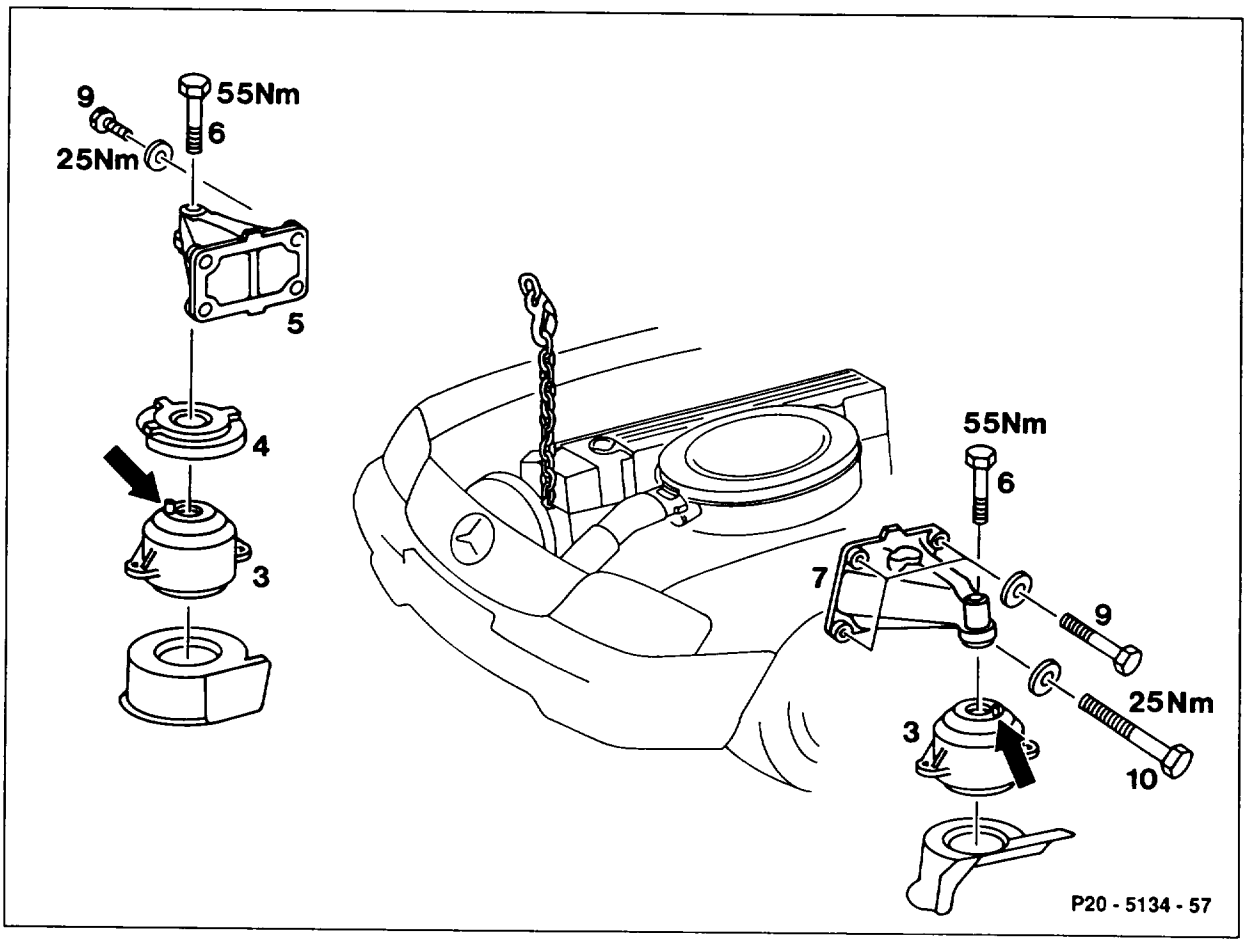

Model 129
9 M8 × 30 bolt + washer
10 M8 × 95 bolt + washer

Fan shroud or if split fan shroud version, fan shroud ring	remove, place over fan, install (20–3400).
Intake air cowl	remove, install (09–0060).
Top engine bearing bolts (6)	unscrew, screw on (55 Nm).
Engine at front lifting lug	raise.
Right engine carrier: shield (4)	take off, install.
Bolts (9 and 10)	unscrew, screw on (25 Nm).
Engine carriers (5 and 7)	remove, install.

Installation notes

If air injection fitted: holder of air injection line at right engine carrier . . . . . screw on.

If exhaust gas recirculation fitted: holder of line . . . . . screw on.

If electronic accelerator pedal fitted: holder of actuator at left engine carrier . . . . . screw on.

The anti-twist lock (arrow) in engine mount (3) must engage in the opening in the shield (4) and in the retaining groove . . . . . in the engine carrier.

Tightening torques in Nm

Engine carrier bolt to crankcase	25
Engine carrier bolt to engine mount	55

Special tool

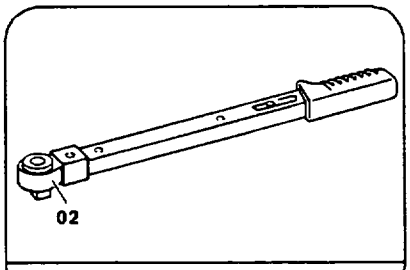

001 589 72 21 00

The Electrical Troubleshooting Manual is composed of system diagrams. The layout of the system diagram contains all components of the system (ie: control modules, sensors, voltage supply, fuse connection, etc.).

The system diagrams are arranged in the familiar group system (00 - 91).

For easier comprehension, the system diagrams in Group 07, Engine Fuel Systems, are depicted on several consecutive pages. Consecutive pages are denoted with roman numerals (I, II, III, etc.). For example, the system diagram of Engine 119 is depicted on two pages (07-5.00/I, 07-5.00/II).

Also found on consecutive page diagrams are wire leads which direct you to a different page within that system.
For example: ↓
X4/25 (2)
II

This indicates that the wire continues to component X4/25, pin 2 and that this component and it´s wiring may be found on consecutive page no. II.

Variations in wiring or componentry which are model specific, or due to engine variations or equipment levels are enclosed by a dashed box.

Components/wiring for California vehicles are indicated by the callout U2 in the upper left hand corner of a dashed box. The callout U2 is then referenced in the legend as Valid for (USA) California.

Connector sleeves (Z) are replaced by a twin-connection when applicable.
Actual cross section of wire may differ from values shown in wiring diagram.
Changes in cross section of wire will be shown framed.

Vehicles Identification Numbers are valid for vehicles built during main production run.
Vehicles built during production phase-in or production start-up may have lower
Vehicle Identification Numbers.

Coordination of acronym to function is listed in group 00-A.3 .

Components which include a slash mark in their description, (ie: N47-1 ASR/SPS control module) indicates that the component is applicable to either both systems or just one of the systems.

Example: N47-1 ASR/SPS control module

Model 124 is not equipped with SPS, therefore the control module is applicable only for ASR.

Model 140 is equipped with SPS, therefore the control module is applicable for both ASR and SPS.

Explanations:

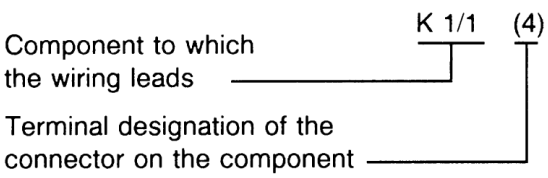

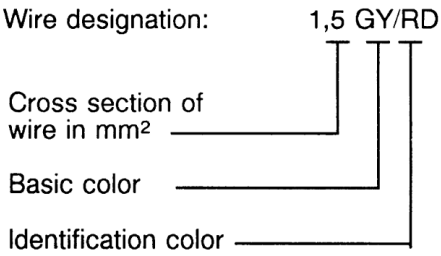

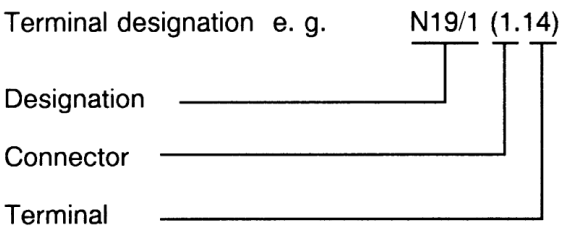

Driving direction: →X

This symbol ☞ **PE** . . refers to the group, in which further function diagrams can be found.

The following acronyms may be found in the wiring diagrams within the manual.

Acronym	System/Description
4MATIC	Automatically controlled four-wheel drive
A/C (Automatic)	**A**ir **C**onditioning (Automatic)
A/C (Tempmatic)	**A**ir **C**onditioning (Tempmatic)
AB	**A**ir**B**ag
ABS	**A**nti-lock **B**rake **S**ystem
ADM	**A**utomatic **D**imming inside rearview **M**irror
ADS	**A**daptive **D**amping **S**ystem
AIR	Secondary **AIR** injection
AP	**A**ccelerator **P**edal
AS	**A**ntenna **S**ystem
ASD	Automatic locking differential
ASR	**A**cceleration **S**lip **R**egulation
AT	**A**utomatic **T**ransmission
ATA	**A**nti-**T**heft **A**larm
BA	**B**ackup **A**ssist
BARO	**BARO**metric pressure
BCAPC	**B**arometric pressure-**C**harge **A**ir **P**ressure **C**ompensation
BDC	**B**ottom **D**ead **C**enter
BM	**B**ase **M**odule
BPC	**B**arometric **P**ressure **C**ompensation
CA	**C**losing **A**ssist
CAN	**C**ontroller **A**rea **N**etwork
CC	**C**ruise **C**ontrol
CDC	**CD C**hanger
CF	**C**onveniece **F**eature
CFI	**C**ontinuous **F**uel **I**njection system (electronic)

The following acronyms may be found in the wiring diagrams within the manual.

Acronym	System/Description
CKA	**Cran**K **A**ngle
CKP	**Cran**K**s**haft **P**osition
CL	**C**entral **L**ocking
CLUS	Instrument **CLUS**ter
CMP	**Ca**M**s**haft **P**osition
CST	**C**abriolet **S**oft **T**op
CTEL	**C**ellular **TEL**ephone
CTP	**C**losed **T**hrottle **P**osition (idle)
DI	**D**istributor **I**gnition system
DM	**D**iagnostic **M**odule
DTC	**D**iagnostic **T**rouble **C**ode
EA	**E**lectronic **A**ccelerator
ECL	**E**ngine **C**oolant **L**evel
ECT	**E**ngine **C**oolant **T**emperature
EDC	**E**lectronic **D**iesel **C**ontrol
EDR	**E**lectronic **D**iesel **R**egulation
EDS	**E**lectronic **D**iesel **S**ystem
EGR	**E**xhaust **G**as **R**ecirculation
EIFI	**E**lectronic **I**n-line **F**uel **I**njection
EMSC	**E**lectric **M**irror, **S**teering **C**olumn adjustment, heated mirrors
ESA	**E**lectric **S**eat **A**djustment
ESC	**E**lectric **S**teering **C**olumn adjustment
ESCM	**E**ngine **S**ystems **C**ontrol **M**odule
EATC	**E**lectronic **A**utomatic **T**ransmission **C**ontrol
ETC	**E**lectronic **T**ransmission **C**ontrol
ETR	**E**mergency **T**ensioning **R**etractor
ETS	**E**lectronic **T**raction **S**ystem

The following acronyms may be found in the wiring diagrams within the manual.

Acronym	System/Description
EVAP	**EVAP**orative emission control system
FAN	**FAN**nfare horns
FFS	**F**rame **F**loor **S**ystem
FP	**F**uel **P**ump
GIM	**G**ovenor **I**mpulse **M**ethod
HCS	**H**eadlamp **C**leaning **S**ystem
HFM-SFI	**HFM S**equential multiport **F**uel **I**njection/ignition system
HFS	**H**ands **F**ree **S**ystem
HHT	**H**and-**H**eld **T**ester
HORN	**HORN** signal system
HS	**H**eated **S**eats
IAT	**I**ntake **A**ir **T**emperature
IDC	**I**n-**D**ash **C**ontroller
INFO	**INFO**rmation center
IR	**I**nfra**R**ed
IRCL	**I**nfra**R**ed remote **C**entral **L**ocking
ISC	**I**dle **S**peed **C**ontrol
KS	**K**nock **S**ensor
KSS	**K**nock **S**ensor **S**ystem
LH-SFI	**LH-S**equential multiport **F**uel **I**njection system
LS	**L**oudspeaker **S**ystem
MAF	**M**ass **A**ir **F**low
MAP	**M**anifold **A**bsolute **P**ressure
MIL	**M**alfunktion **I**ndicator **L**amp
MT	**M**anual **T**ransmission
MVA	**M**anifold **V**acuum **A**ssist

The following acronyms may be found in the wiring diagrams within the manual.

Acronym	System/Description
O2S	**O**xyigen (O_2) **S**ensor
OBD	**O**n-**B**oard **D**iagnostics
OC	**O**xidation **C**atalytic converter
OSB	**O**rthopedic **S**eat **B**ackrest
PEC	**P**ressurized **E**ngine **C**ontrol
PL	**P**ower **L**ocking
PMP	**P**artial intake **M**anifold **P**reheater
PNP	**P**ark / **N**eutral **P**osition
PS	**P**ower **S**teering
PSE	**P**neumatic **S**ystem **E**quipment
RB	**R**oll **B**ar
RD	**R**a**D**io
REST	Residual engine heat utilization
RHR	**R**etractable rear **H**ead **R**estraints
RHS	**R**ear **H**eated **S**eats
RPM	**R**evolutions **P**er **M**inute (engine speed)
RST	**R**oadster **S**oft **T**op
RTG	**R**etractable **T**runk lid **G**rip
SBE	**S**eat **B**elt **E**xtender
SLO	**S**tarter **L**ock-**O**ut
SMS	**S**ervice **M**icrofiche **S**ystem
SPS	**S**peed-sensitive **P**ower **S**teering
SR	**S**liding/pop-up **R**oof
SRS	**S**upplemental **R**estraint **S**ystem
TAF	**T**runk lid **A**uxiliary **F**use
TAV	**T**ank **A**eration **V**alve
TB	**T**hrottle **B**ody

The following acronyms may be found in the wiring diagrams within the manual.

Acronym	System/Description
TDC	**T**op **D**ead **C**enter
TIC	**T**ransistorized **I**gnition **C**ontrol
TN	Speed signal
TPC	**T**ire **P**ressure **C**ontrol
TPM	**T**ire **P**ressure **M**onitoring
TRAP	**TRAP** Oxidizer
TRIP	**TRIP** computer
TS	**T**owing **S**ensor
TVV	**T**ank **V**ent **V**alve
TWC	**T**hree **W**ay **C**atalytic converter
VAF	**V**olume **A**ir **F**low
VSS	**V**ehicle **S**peed **S**ensor
WOT	**W**ide **O**pen **T**hrottle (full load)
TC	**T**urbo**C**harger
TCM	**T**ransmission **C**ontrol **M**odule
TD	Speed signal (**T**ime **D**ivision) (EZL)

Wire color code

BK = black
BR = brown
BU = blue
IV = ivory
GN = green
GY = grey
TR = neutral/transparent
OR = orange
PK = pink
RD = red
VI = purple
WT = white
YL = yellow

INTRODUCTION

This manual contains electrical troubleshooting information for the model 124.

The front page of each section contains the index for that section. Refer to the appropriate schematic diagram as the starting point in diagnosing a fault symptom (see Troubleshooting, page 5).

Component location information is included at the end of each section, beginning on page 201. This information includes a description of each component location and a referenced photograph showing component location on the picture.

Automatic Climate Control (ACC) and Tempmatic Climate Control (TCC) data for all models is contained in separate sections of the manual.

HOW TO USE THIS MANUAL

How to Read Schematic Diagrams

Electrical components which work together are shown together. Schematic drawings are arranged so that current flows from positive at the top of the page, to negative at the bottom. Fuses are shown at the top of the page. All wires, connectors, switches, and motors are shown in the flow of current to ground at the bottom of the page. The "hot" labels appearing at the top of fuses or components show the Ignition Starter/Switch positions which supply power to the point. (See Circuit Identification, page 9.)

The terminal number "30' appearing on the Ignition/Starter Switch and Exterior Lamp Switch means that these terminals are always supplied with power. The terminal number "15" on the Ignition/Starter Switch means that this terminal is supplied with power only when the Ignition/Starter Switch is in the "Run" or "Start" positions.

Component and Wire Representation

All wiring between components is shown exactly as it exists on the vehicle. Wiring inside complicated components has been simplified to aid in understanding their electrical operation. Transistorized components are shown as plain boxes labeled with a solid state symbol. Switches and sensors are shown "at rest," as if the Ignition Starter/Switch were off. Notes are included which describe how switches and other components work.

Circuits Which Share Power and/or Grounds

Each circuit is shown completely on one schematic diagram. Wires common to different schematics are cross referenced and marked with arrows. To find other circuits which might share fuse terminals or screw terminal blocks, look on the Power Distribution or Fuse Block Details schematics. To find other circuits which might share connections to ground terminals, look on the Ground Distribution schematics.

Power Distribution and Ground Distribution Diagrams

The Power Distribution diagrams show connections from the Battery and Alternator to the fuses, and to the Ignition Starter/Switch and Exterior Lamp Switch. This will tell you how each circuit gets its power, and what circuits share common fuses. Ground Distribution diagrams show how several circuits are connected to common grounds.

Component Identification

Component names are found underlined next to or above each component. Above the component name, you will find a Component Identification Code Number.

REVISIONS:

SYMBOLS

ONE POLE,
TWO POSITION
SWITCH

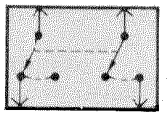

SWITCHES THAT
MOVE TOGETHER

DASHED LINE SHOWS
A MECHANICAL
CONNECTION
BETWEEN SWITCHES

X28

TWO CONNECTIONS (PINS)
IN THE SAME CONNECTOR

DASHED LINE SHOWS
PARTS OF THE
SAME CONNECTOR

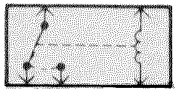

RELAY SHOWN
WITH NO
CURRENT
FLOWING
THROUGH
COIL

WHEN COIL IS
ENERGIZED, SWITCH
IS PULLED CLOSED

DIODE
CURRENT CAN
FLOW ONLY IN
THE DIRECTION
OF THE ARROW

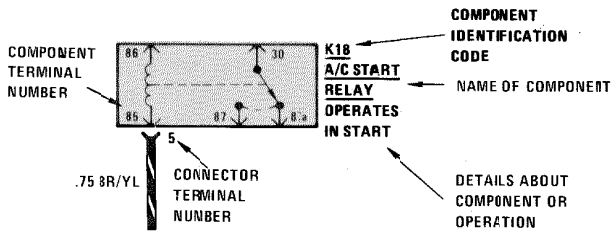

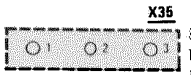

SCREW
TERMINAL
BLOCK

TWO PARTS
OF THE
SAME
COMPONENT

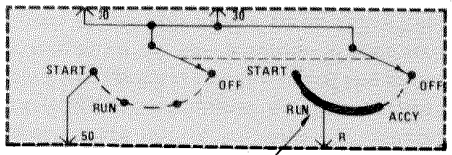

S2/1
IGNITION/STARTER
SWITCH

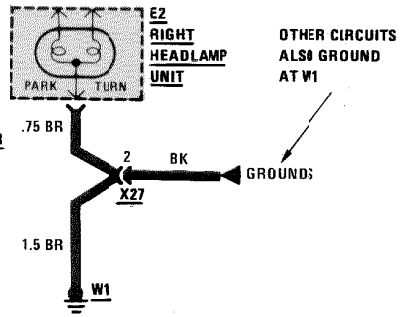

WIRE INSULATION	
COLOR	ABBREVIATIONS
BLACK	BK
BROWN	BR
RED	RD
YELLOW	YL
GREEN	GN
BLUE	BU
VIOLET	VI
GRAY	GY
WHITE	WT
PINK	PK

WIRE SIZE CONVERSION CHART	
METRIC CROSS SECTIONAL AREA IN MM ^{2}	AWG (AMERICAN WIRE GAUGE)
.5	20
.75	18
1	16
1.5	14
2	14
2.5	12
4	10
6	8
8	8
16	4
20	4
25	2
32	2

REVISIONS:

SYMBOLS

ENTIRE COMPONENT SHOWN

PART OF A COMPONENT SHOWN

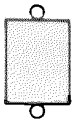
COMPONENT WITH SCREW TERMINALS

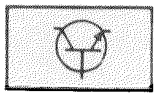
TRANSISTORIZED COMPONENT

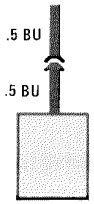

CONNECTOR ON COMPONENT LEAD (PIGTAIL)

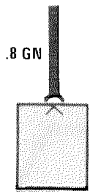

CONNECTOR ATTACHED TO COMPONENT

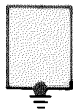
COMPONENT CASE IS DIRECTLY ATTACHED TO METAL FART OF CAR (GROUNDED)

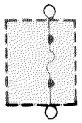
FUSE WITH SCREW TERMINALS

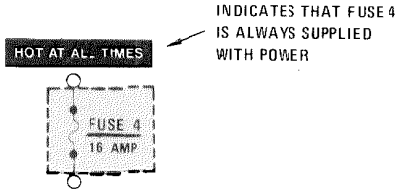

INDICATES THAT FUSE 4 IS ALWAYS SUPPLIED WITH POWER

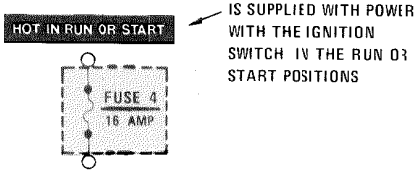

INDICATES THAT FUSE 4 IS SUPPLIED WITH POWER WITH THE IGNITION SWITCH IN THE RUN OR START POSITIONS

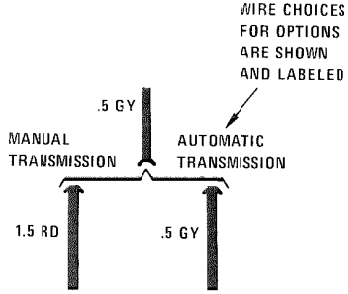

WIRE CHOICES FOR OPTIONS ARE SHOWN AND LABELED

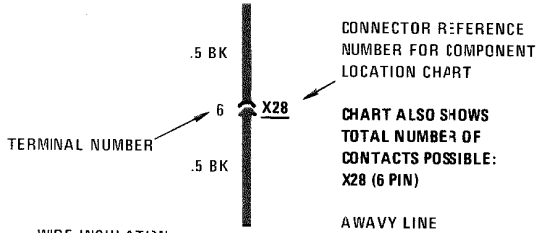

CONNECTOR REFERENCE NUMBER FOR COMPONENT LOCATION CHART

CHART ALSO SHOWS TOTAL NUMBER OF CONTACTS POSSIBLE: X28 (6 PIN)

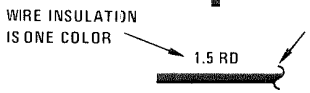

A WAVY LINE MEANS A WIRE IS TO BE CONTINUED

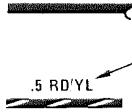

WIRE INSULATION IS ONE COLOR WITH ANOTHER COLOR STRIPE (RED WITH YELLOW)

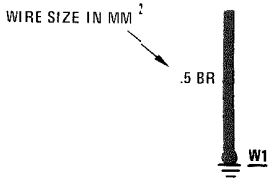

WIRE IS ATTACHED TO METAL PART OF CAR (GROUNDED)

GROUND IS NUMBERED FOR REFERENCE ON COMPONENT LOCATION CHART

OTHER CIRCUITS THAT SHARE A GROUND ARE SHOWN IN GROUND DISTRIBUTION

CURRENT PATH IS CONTINUED AS LABELED. THE ARROW SHOWS DIRECTION OF CURRENT FLOW AND IS REPEATED WHERE CURRENT PATH CONTINUES.

TO TACHOMETER, PAGE 115/3

A WIRE WHICH CONNECTS TO ANOTHER CIRCUIT

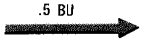

LAMPS: TURN/ HAZARD/STOP, PAGE 113

REVISIONS:

SYMBOLS

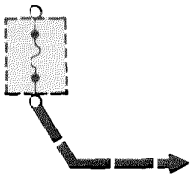

THIS FUSE FEEDS OTHER CIRCUITS WHICH ARE NOT SHOWN HERE. THESE CIRCUITS ARE IDENTIFIED IN "POWER DISTRIBUTION"

POWER DISTRIBUTION

CIRCUITS NOT SHOWN HERE SHARE THIS GROUND. THESE CIRCUITS ARE IDENTIFIED IN "GROUND DISTRIBUTION."

VACUUM RESTRICTOR

VACUUM RESTRICTORS ARE POROUS BRASS PLUGS IN THE VACUUM HOSE. THE RESTRICTOR SLOWS THE VACUUM FLOW.

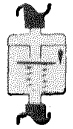

CHECK VALVE

VACUUM CAN FLOW EASILY IN THE DIRECTION OF THE ARROW. VACUUM CANNOT FLOW AGAINST THE ARROW.

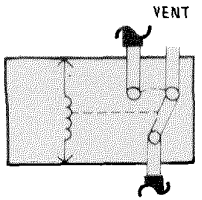

A SWITCHOVER VALVE IS A SOLENOID OPERATED VACUUM VALVE. THE VALVE IS VENTED WHEN THE COIL OF THE SOLENOID IS DE-ENERGIZED.

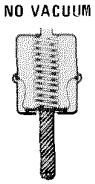

VACUUM ELEMENTS PUSH OR PULL A SHAFT BETWEEN TWO FIXED POSITIONS. WHEN VACUUM IS APPLIED, THE SHAFT IS PULLED IN. WHEN NO VACUUM IS PRESENT, THE SHAFT IS PUSHED OUT BY A SPRING.

INDUCTIVE SENSOR

TEMPERATURE SENSOR

REVISIONS:

TROUBLESHOOTING

TROUBLESHOOTING PROCEDURE

1. VERIFY THE COMPLAINT
   Operate the problem circuit in all modes to check the accuracy of the complaint. This may give a clue as to the extent, nature, and location of the problem.
2. CHECK THE FUSE AND RELATED CIRCUITS
   Determine the extent of the problem by operating circuits which share the same fuse. If the other circuits work, the fuse is good. The cause must be within the wiring unique to the problem circuit.
3. REFER TO THE E.T.M. AND ANALYZE THE CIRCUIT
   Study the circuit schematic to learn how the circuit should operate. The schematic will tell you:
   – Where the circuit receives current.
   – What circuit protection is involved.
   – What switches control current flow.
   – How the loads operate.
   Understanding the total circuit is necessary if you are to troubleshoot efficiently. Determine possible problem areas and testing locations. The Component Location table tells where components and ground points are located.
4. SYSTEMATICALLY TEST THE CIRCUIT IN ORDER TO ISOLATE THE PROBLEM
   As a general guideline:
   – If the fault affects a single component of a circuit, start to test at that component.
   – If the fault affects a number of components of a circuit, start to test at the point where the circuit gets its power.
5. MAKE THE REPAIR
   After you have narrowed the problem down to a specific cause, repair as necessary.
6. VERIFY CIRCUIT OPERATION
   First operate the repaired circuit in all modes to be sure you have fixed the entire problem. Next, operate all circuits which share the same fuse. Be sure that this does not cause the problem to reappear.

TESTING TOOLS

A VOLTMETER is used to measure voltage at various points within a circuit. If an analog VOLTMETER is used, it must have a resistance of at least 20,000 ohms per volt in the low range. Any digital VOLTMETER may be used.

Use of an OHMMETER should be limited to harness wiring, connections and switches. It should not be used on solid state components or relays. An OHMMETER measures a circuit for its resistance to current flow. Since an OHMMETER has an internal battery that provides current to the circuit under test, it is first necessary to disconnect the car battery. This will ensure that there is no voltage already present in the circuit.

An AMMETER measures the current flowing within a circuit. There are two types of AMMETERS: the SERIES AMMETER and the INDUCTIVE (clamp-on) AMMETER (e.g. Sun DMM-5). The INDUCTIVE AMMETER is clamped around a wire in the circuit under test. The SERIES AMMETER must be connected into the circuit.

A SERIES AMMETER must never be connected in parallel with a component. This can cause a short circuit and damage the meter.

REVISIONS:

TROUBLESHOOTING

TESTS

Voltage Test

1. Connect the negative lead of the VOLTMETER to a known good ground or negative (-) battery terminal.
2. Connect the positive lead of the VOLTMETER to a point (connector or terminal) you wish to test.
3. If the meter registers, there is voltage present. This voltage should be within one volt of measured battery voltage. A loss of more than one volt indicates a problem. A loose connection is a likely cause. Take readings at several points along the circuit to isolate the problem.

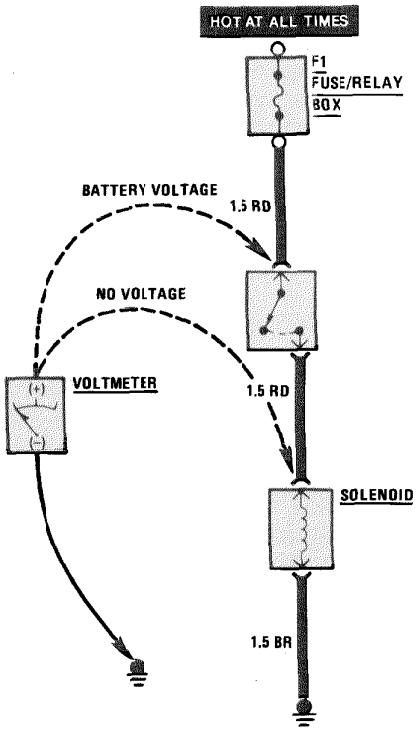

Voltage Test

Voltage Drop Test

This test checks for voltage being lost along a wire, or through a connection or switch.

1. Connect the positive lead of the VOLTMETER to the end of the wire, or to the side of the connection which is closest to the battery.
2. Connect the negative lead to the other end of the wire, or the other side of the connection.
3. When the circuit is operated, the VOLTMETER will show the difference in voltage between the two points. A difference (or drop) of more than one volt indicates a problem.

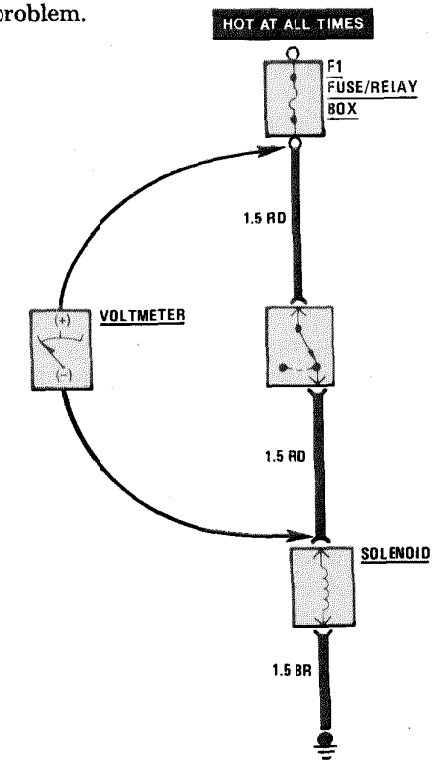

Voltage Drop Test

Testing For Short to Ground With a Voltmeter

1. Remove the blown fuse and disconnect the load.
2. Connect the VOLTMETER across the fuse terminals.
3. Beginning near the fuse box, move the harness from side to side while watching the VOLTMETER.
4. If the meter registers, there is a short to ground in the wiring.

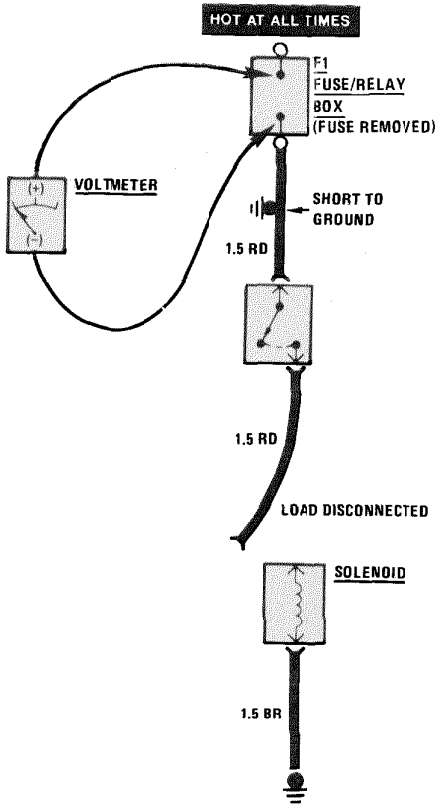

Testing for Short with Voltmeter

REVISIONS:

TROUBLESHOOTING

Continuity Test

1. Check OHMMETER by adjusting the needle to zero while holding the leads together.
2. Disconnect the car battery.
3. Connect one lead of the OHMMETER to one end of the part of the circuit you wish to test.
4. Connect the other lead to the other end.
5. If the meter shows low or no resistance, there is continuity.

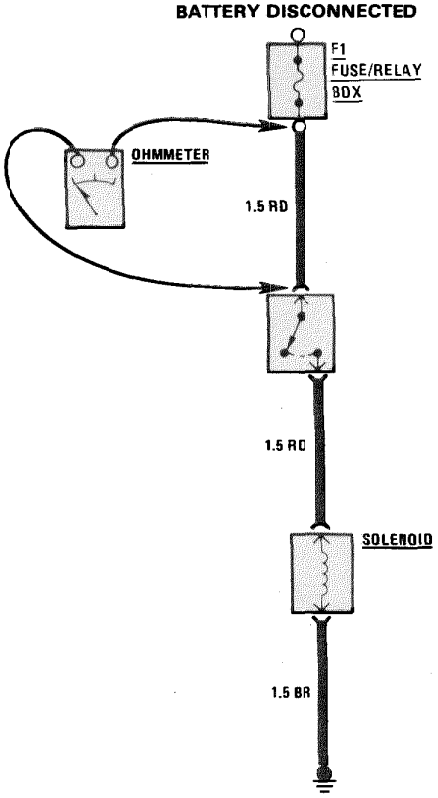

Continuity Test

Testing For Short to Ground With an Ohmmeter

1. Calibrate OHMMETER by adjusting the needle to zero while holding the leads together.
2. Remove the blown fuse and disconnect the battery and load.
3. Connect one lead of the OHMMETER to the fuse terminal on the load side.
4. Connect the other lead to a known good ground.
5. Beginning near the fuse box, move the harness from side to side, while watching the OHMMETER.
6. If there is no short, the meter will show infinitely high resistance. If the meter registers low or no resistance, there is a short to ground in the wiring.

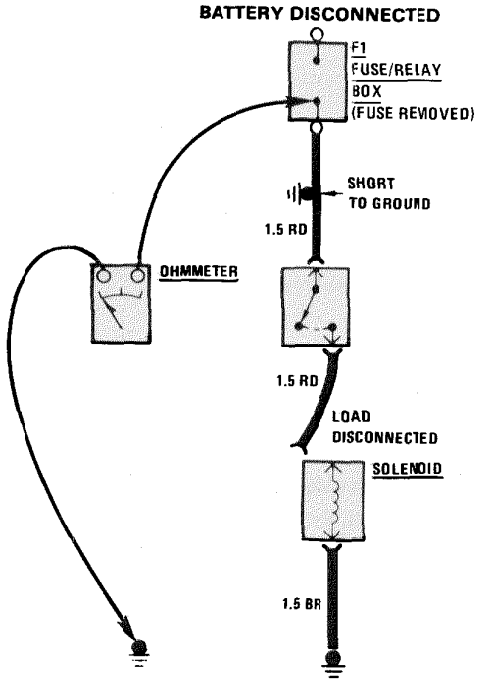

Testing for Short with Ohmmeter

Current Test With a Series Ammeter

1. Disconnect the circuit at a convenient point such as a connector.
2. Connect a lead of the AMMETER to one side of the open circuit.
3. Connect the second lead of the AMMETER to the other side of the open circuit. The AMMETER completes the circuit.
4. With the circuit operating, the AMMETER will show how much current is flowing in the circuit.

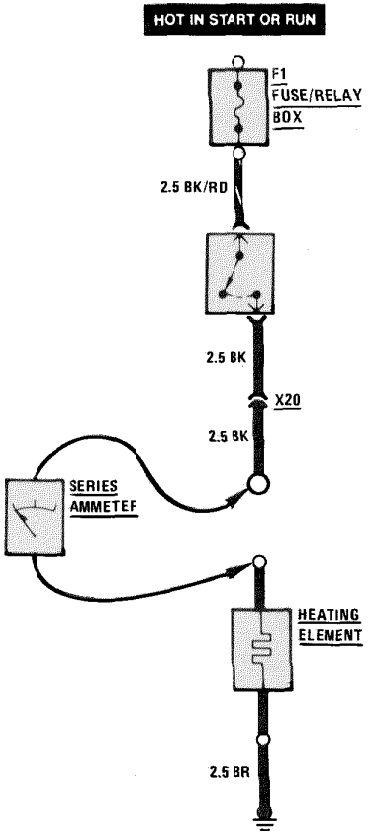

Current Test (Series Ammeter)

REVISIONS:

Current Test With an Inductive Ammeter

1. Clamp the AMMETER pliers around the wire under test in the circuit.
2. With the circuit operating, the AMMETER will show how much current is flowing in the circuit.

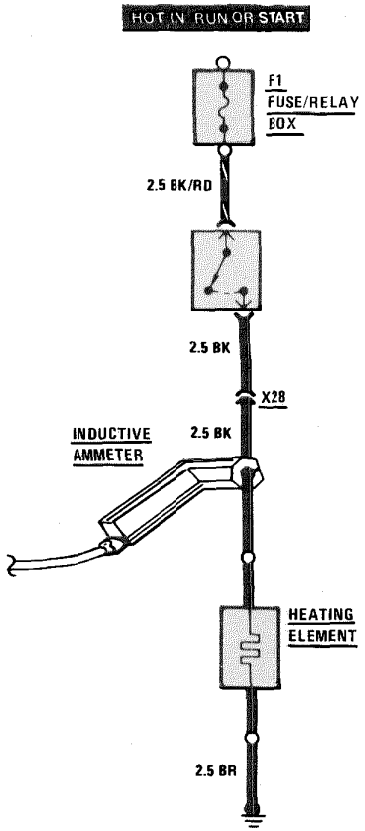

Current Test (Inductive Ammeter)

Troubleshooting Vacuum Components

A VACUUM TESTER is used to apply vacuum to vacuum components. The tester (M-B part no. 589 25 2100) registers in mbar of vacuum. Two typical applications of this tester are shown below.

PERMISSIBLE LEAKS	
Check Valves	50 mbar in 10 min. at 300 mbar vacuum
Other Vacuum Components	20 mbar/min. at 300 mbar vacuum

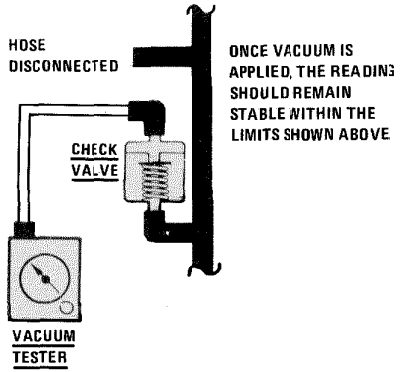

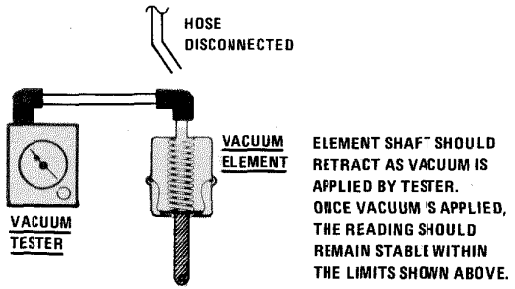

Switchover Valves (as of MY 1984)

The former switchover valves on all models are replaced by a standard switchover valve.

When de-energized (no current), the side and the lower pipes are connected to each other. When energized, the upper pipe connects to the side pipe. If only two pipes are used, a standard protective cap with vent is plugged onto the third pipe.

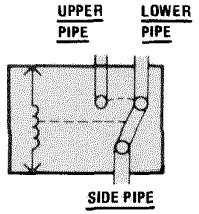

SCHEMATIC SYMBOL FOR SWITCHOVER VALVE

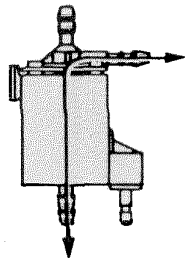

SWITCHOVER VALVE DE-ENERGIZED

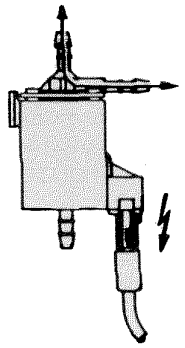

SWITCHOVER VALVE ENERGIZED

REVISIONS:

CIRCUIT IDENTIFICATION

Circuit	Description
1	Negative side of ignition coil (low voltage).
4	Output of ignition coil (high voltage).
15	Battery voltage; ignition/starter switch in "Run" (pos. 2) of "Start".
15R	Battery voltage; ignition/starter switch in "Accy" (pos. 1), "Run" (pos. 2) or "Start".
15R/30	Power feed for Power Seat Motors and Telescopic Steering Wheel.
15X	Battery voltage; ignition/starter switch in "Run" (Pos. 2).
16	Ignition switching unit connection from negative side of coil.
30	Battery voltage; "hot" at all times.
31	Ground.
31b	Switched ground.
49	Turn signal/hazard flasher input.
49a	Turn signal/hazard flasher output.
50	Starter motor control.
56	Power feed for headlamps.
56a	Headlamps; high beam and indicator lamp.
56b	Headlamps; low beam.
56d	Headlamp flasher.
58D	Instrument lamp output; from Electronic Control Unit.
58d	Instrument lamp output; from Rheostat.
58L	Parking, tail, side marker lamps; left side.
58R	Parking, tail, side marker lamps; right side.
58N	Fog lamps.
61	Charge indicator.
85	Relay winding; ground side.
86	Relay winding; positive side.
87	Relay output; normally open.
87a	Relay output; normally closed.
K, K30	Battery voltage; exterior lamp switch in "Parking" or "Headlamp" position.
L	Turn signal lamps; left side.
LA	Preglow indicator.
N	Fog lamp switch; output.
NSE	Fog lamp switch; input.
	Battery voltage with exterior lamp switch in "Parking" or "Headlamp" position.
P30	Power feed for R and L standing lamps; battery voltage with ignition/starter switch in "Off" or "Accessory" position.
R	Turn signal lamps; right side.
TD	Engine speed signal.
	NOTE: Circuit identification numbers will appear on schematics inside component boxes. Connector terminal numbers will appear on schematics outside component boxes.

REVISIONS:

INDEX

MODEL	SALES DESIGNATION	MODEL	SALES DESIGNATION
124.026	260E	124.090	300TE
	300E 2.6 ①	124.128	300D 2.5 Turbo
124.030	300E	124.133	300D Turbo
124.034	400E	124.193	300TD Turbo
124.036	500E	124.230	300E 4MATIC
124.050	300CE	124.290	300TE 4MATIC
124.051	300CE		

CIRCUIT	PAGE
Active Bass: Amplifiers and Speakers	132
Anti-Lock Brake System (ABS)	150
ABS with ASD/4matic	151
ABS with ASR	152
ABS with ASR/Electronic Accelerator	152/4
Automatic Antenna	131
Automatic Climate Control	301
Automatic Locking Differential (ASD)	153
Auxiliary Fan	121
CD Changer	131/8
Cellular Telephone	134
Central Locking System	146
Charging System	123
Cigar Lighter	131
Clock	136
Component Locations	201
Controller Area Network (CAN) Data Bus	122
Cruise Control	137
Diagnostic Module	113/6
Diagnostic Socket	113
Electronic Accelerator System	138
Electronic Diesel System	115
Electronic Engine Controls	117
Engine Overload Protection	121
4MATIC System	154
First Gear Start	164
Fuel Delivery	114
Fuse Block Details	108
Fuse Circuit List	103
Fuse/Relay Box	102
Gauges	136
Ground Distribution	165
Headlamp Wiper/Washer	162
Heated Seats	142
Heated Windshield Washer System	162
Horns	145
Ignition	113
Lamps	
—Backup	125
—Center Console	130
—Courtesy	128

CIRCUIT	PAGE
Lamps (continued)	
—Fog	124
—Glove Box	131
—Hazard	127
—Headlamps	124
—Instrument Cluster	130
—License	126
—Park	126
—Reading	129
—Side Marker	126
—Stop	125
—Tail	126
—Turn Signal	127
—Trunk	128
—Vanity	129
Orthopedic Seats	155
Outside Heated Mirrors	149
Power Distribution	105
Power Seats	148
Power Windows	144
Preglow System	112
Radio	131
Rear Defogger	141
Rear Head Restraint System	139
Rear Window Sun Shade	143
Rear Wiper/Washer	161
Seat Backrest Locking System	156
Seat Belt Extenders	157
Sliding Roof	140
Sound System: Amplifiers and Speakers	133
Start	111
Supplemental Restraint System (SRS)	158
Tachometer	133
Tailgate Closing Assist	129/2
Telescopic Steering Column	147
Transmission Shift Point Relay	120/2
Transmission Kick-down	113
Two-Piece Radio with Sound System	131/6
Warning Indicators	136
Warning System	135
Wiper/Washer	159

REVISIONS: ① **AS OF MY 1990**

FUSE/RELAY BOX

TOP VIEW

AS OF MY 1986

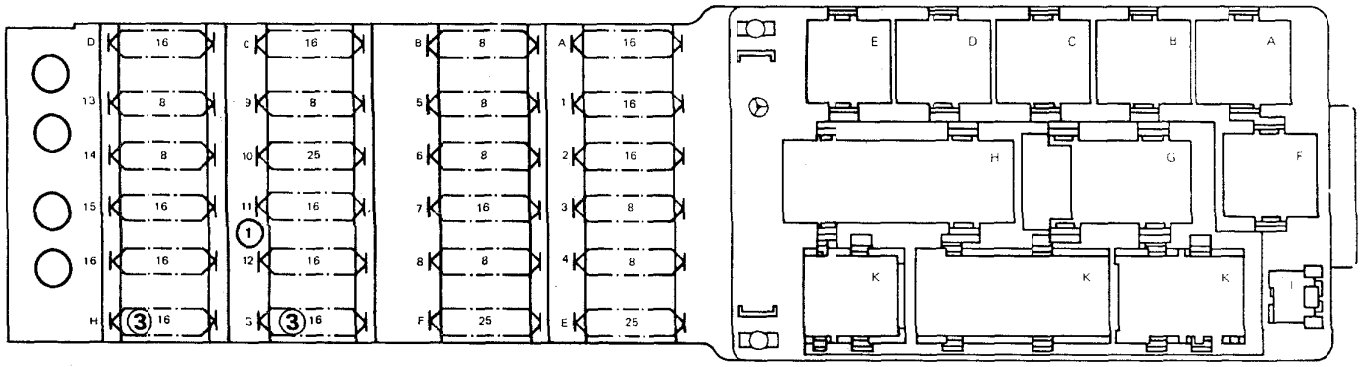

← Driving Direction

RELAY CODE	RELAY USE	RELAY CODE	RELAY USE
A	K5 Power Seat Relay	G	K18 Seat Belt Warning Relay ⑤
B	K10 Auxiliary Fan Preresistor Relay		K29/1 First Gear Start Relay ⑥
	K9k1 Auxiliary Fan Relay ⑥		
C	K9 Auxiliary Fan Relay	H	N10 Combination Relay
	K9k2 Auxiliary Fan Relay Preresistor ⑥	I	V1 Power Seat Diode ④
			V5 Parking Brake/ASR/ Electronic Accelerator ⑥
D	K2 Headlamp Washer Relay		
E	F14 Auxiliary Fuse Holder	K	N7 Exterior Lamp Failure Monitoring Unit
	K17 Air Injection Relay ⑥		
F	K4 Power Window Relay		
	K24 Convenience Relay ②		

REVISIONS:
① IN LINE FUSE REPLACES FUSE NO. 12 AS OF CHASSIS END NUMBER A292112, F023505
② AS OF MY 1990
③ 25 AMP AS OF MY 1990
④ REPLACED BY K24 AS OF BY 1990
⑤ COUPE MODEL ONLY
⑥ AS OF MY 1992, MODELS 400E/500E

FUSE-CIRCUIT LIST

AS OF MY 1986

No.	Amps (color)	Circuits Protected	Connection to Circuit
1	16 AMPS (PK)	Glove Box Lamp/Cigar Lighter/Radio Rear Head Restraint System Rear Defogger Rear Wiper/Washer System	15R
2	16 AMPS (PK)	Wiper/Washer Headlamp Wiper/Washer Headlamps/Fog Lamps Power Seats Power Windows	15R
3	8 AMPS (WT)	Lamps: Park/Tail/Side Marker/ License (Right) Illumination: Instrument Cluster/Center Console Headlamp Wiper/Washer	58R
4	8 AMPS (WT)	Fog Lamps	58N
5	8 AMPS (WT)	Stop Lamps/Dome Lamp/ Lamp Failure Monitoring Unit Warning Indicators/Gauges/ Clock/Tachometer Cruise Control Warning System ①	15
6	8 AMPS (WT)	Turn Signal/Hazard Lamps Outside Temperature Gauge Warning System Horns	15

No.	Amps (color)	Circuits Protected	Connection to Circuit
7	16 AMPS (PK)	Auxiliary Fan Automatic Climate Control Backup Lamps Heated Washer System	15
8	8 AMPS (WT)	Lamps: Park/Tail/Side Marker License	58L
9	8 AMPS (WT)	Hazard Lamps/Clock Warning System Radio ③ Courtesy Lamps Power Seats	30
10	25 AMPS (BU)	Rear Defogger	30
11④	25 AMPS (BU)	Anti-Theft Alarm System	30
12②	25 AMPS (BU)	Automatic Climate Control (Blower Control)	15X
12④	25 AMPS (BU)	Anti-Theft Alarm System	30
13	8 AMPS (WT)	Headlamps (Left Low Beam) Anti-Theft Alarm System	56b
14	8 AMPS (WT)	Headlamps (Right Low Beam) Anti-Theft Alarm System	56b

(Continued on next page)

REVISIONS:
① AS OF MODEL YEAR 1987
② IN LINE FUSE REPLACES FUSE 12 AS OF CHASSIS END NUMBER A292112, F023505
③ AS OF MY 1992, RADIO CONTROL UNIT (A2/2 OR A2/4) ONLY
④ MODELS 400/500E

FUSE CIRCUIT LIST

(Continued from previous page)

Fuse No.	Fuse Amps (color)	Circuits Protected	Connection to Circuit
15	8 AMPS (WT) ⑤	Headlamps (Left High Beam)	56a
16	8 AMPS (WT) ⑤	Headlamps (Right High Beam) High Beam Indicator	56a
A	16 AMPS (PK)	Sliding Roof Heated Seats Orthopedic Seats	15R
B	8 AMPS (WT)	Outside Heated Mirrors Rear Window Sun Shade Seat Belt Extender	15
C	16 AMPS (PK)	Anti-Theft Alarm System Central Locking System Automatic Antenna Courtesy Lamps and Trunk Lamp Radio tuner/Amplifier ④ Audio Power Amplifiers ④ CD Changer ④	30
D	16 AMPS (PK)	Auxiliary Fan	30
E	25 AMPS (BU)	Power Seats Driver Power Seat Motors (Memory): Front Height Backrest, Head Restraint Front Passenger Power Seat Motors: Rear-Height, Backrest, Head Restraint	15R/30
F	25 AMPS (BU)	Power Seats/Telescopic Steering Column Driver Power Seat Motors (Memory): Rear Height Fore-Aft Telescopic Steering Column Front Passenger Power Seat Motors: Front-Height, Fore-Aft	15R/30

F13

Fuse No.	Fuse Amps (color)	Circuits Protected	Connection to Circuit
G	16 AMPS (PK) ①	Power Windows (Front Left and Rear Right) ②	15R
H	16 AMPS (PK) ①	Power Windows (Front Right and Rear Left) ③	15R
	8 AMPS (PK) ④	Cellular Telephone	30

F13

F22/2

REVISIONS:
① 25 AMPS AS OF MY 1990
② FRONT WINDOWS ONLY AS OF MY 1990
③ REAR WINDOWS ONLY AS OF MY 1990
④ AS OF MY 1992
⑤ MODELS 400/500E

POWER DISTRIBUTION

AS OF MY 1986

GASOLINE

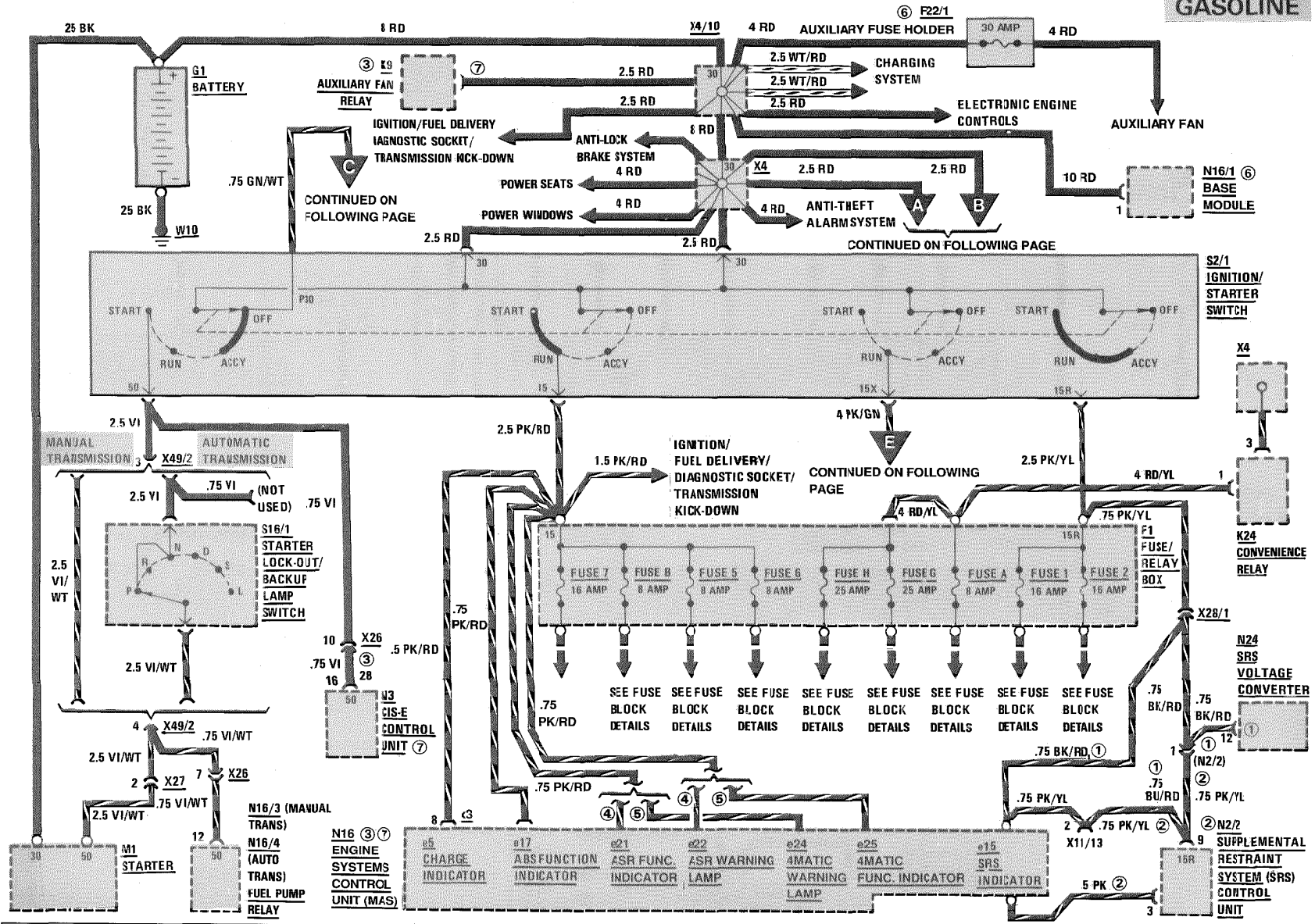

REVISIONS: ① MODEL YEAR 1986 AND 1987 ONLY ② AS OF MY 1988 ③ AS OF MY 1990 ④ WITH ASR ⑤ WITH 4MATIC ⑥ MODELS 400E/500E ⑦ EXCEPT MODELS 400E/500E

POWER DISTRIBUTION

AS OF MY 1986
DIESEL

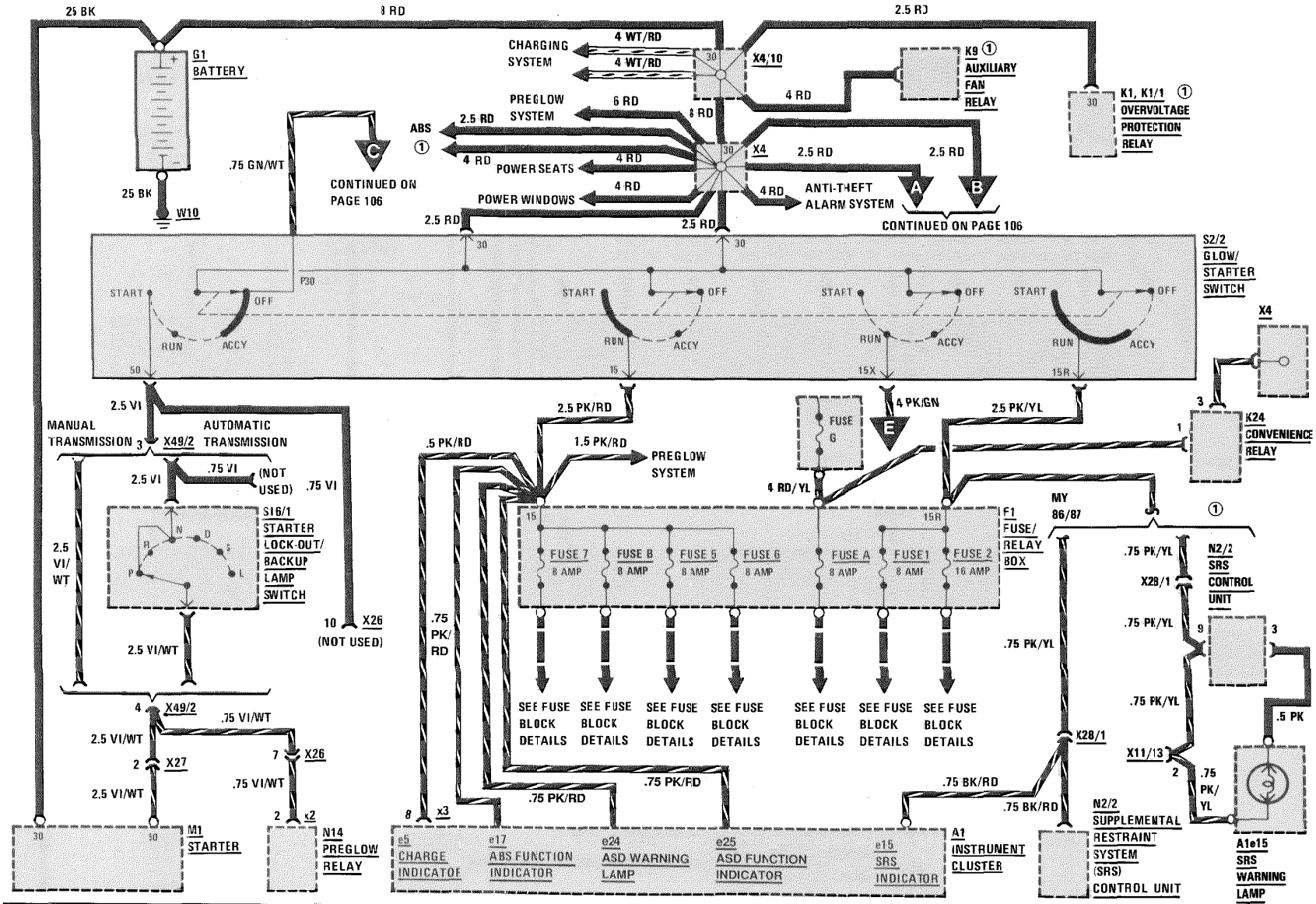

REVISIONS: ① AS OF MY 90

POWER DISTRIBUTION

AS OF MY 1986

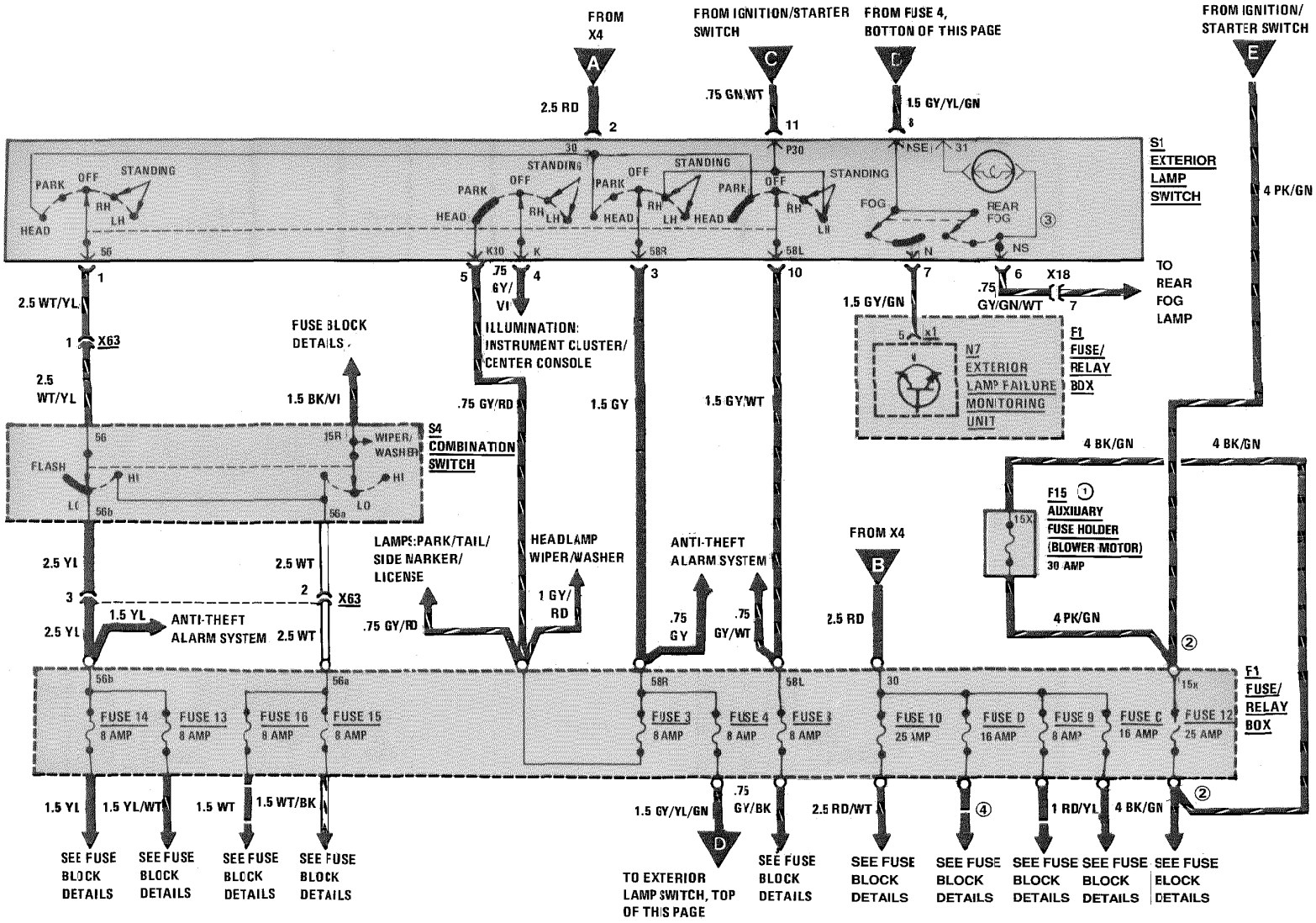

REVISIONS:
① AS OF A CHASSIS END NUMBER A292112, F023505
② AS OF MODEL YEAR 1988, WIRED DIRECTLY THROUGH F15 (F12 NOT USED)
③ AS OF MY 1991
④ EXCEPT MODELS 400E/500E

POWER DISTRIBUTION

AS OF MY 1990

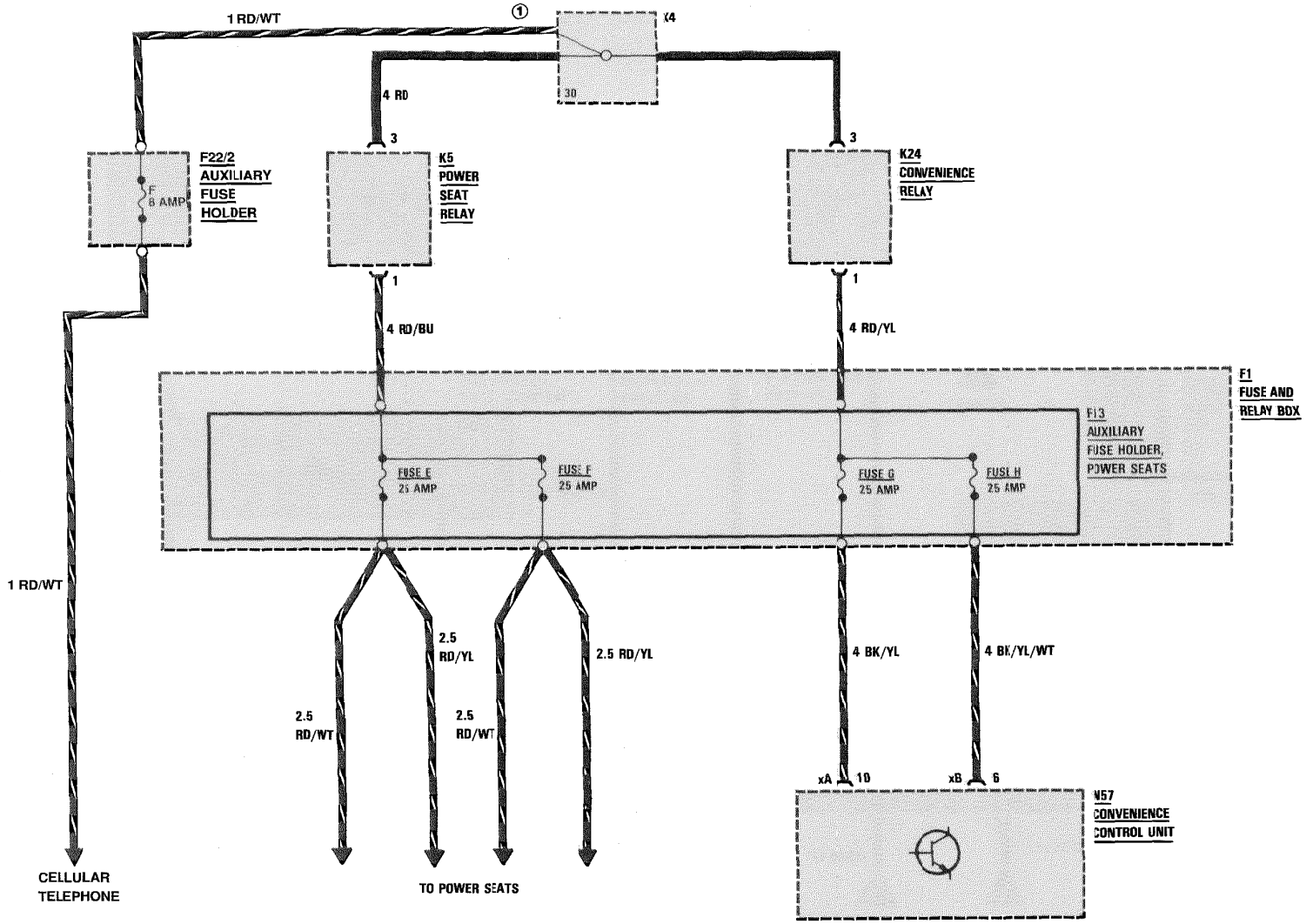

REVISIONS: ① AS OF MY 1992

FUSE BLOCK DETAILS

AS OF MY 1986

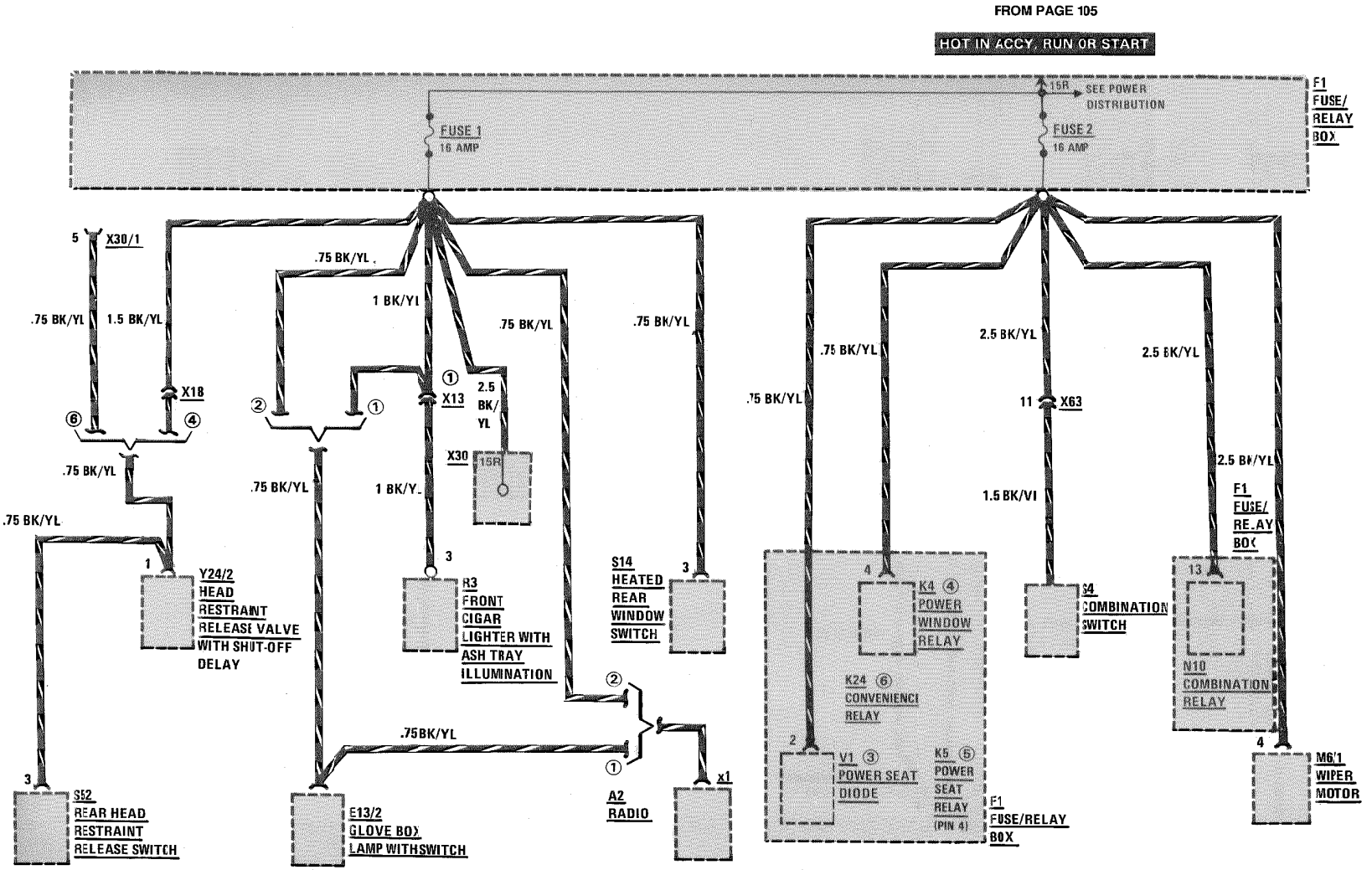

REVISIONS:
① MODEL YEAR 1986 AND 1987 ONLY
② AS OF MODEL YEAF 1988
③ MY 1986-1988
④ MY 1986-1989
⑤ ASOF MY 1989
⑥ ASOF MY 1990

FUSE BLOCK DETAILS

AS OF MY 1986

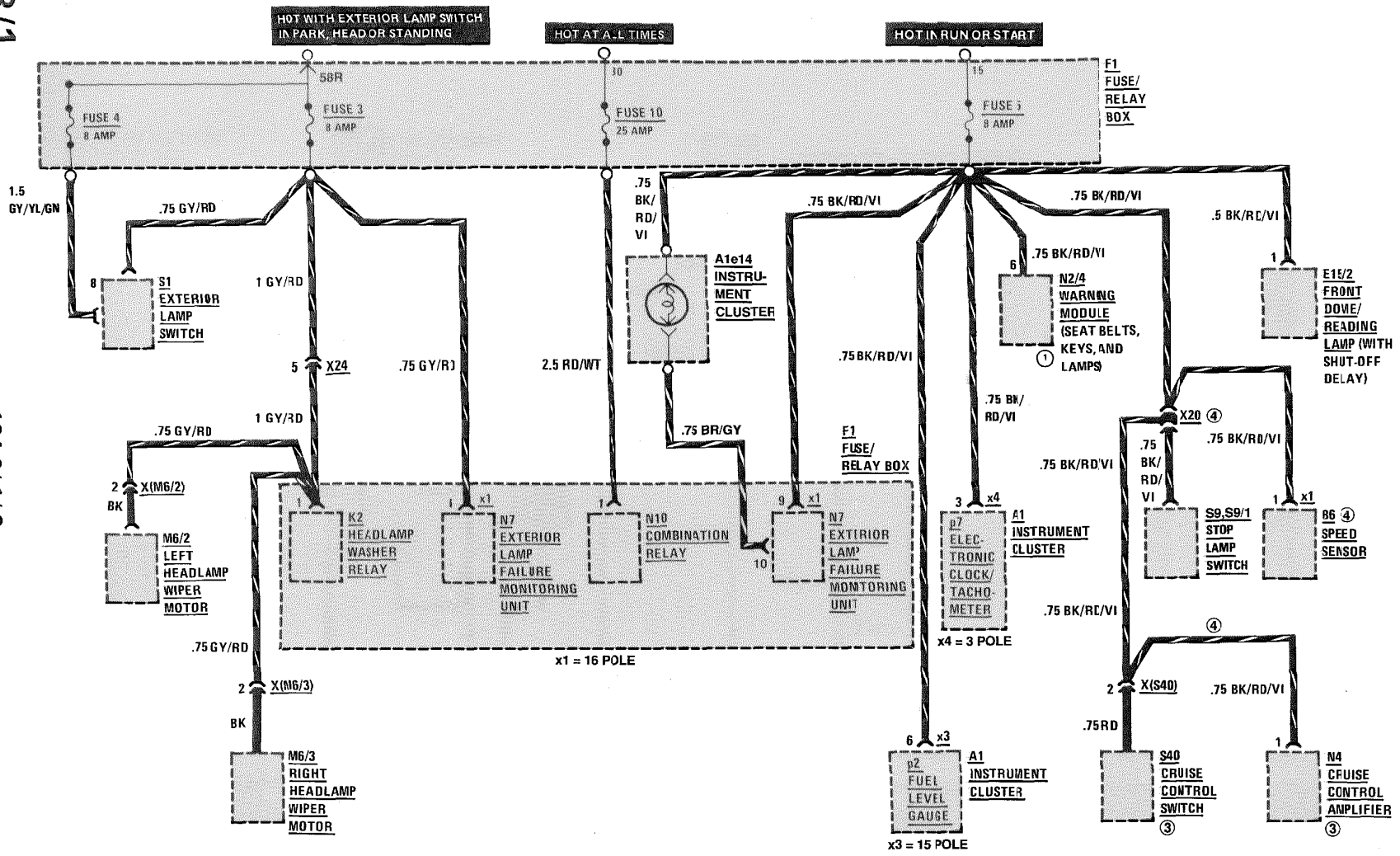

REVISIONS: ① AS OF MODEL YEAR 1987
② MODELS 400E/500E
③ DIRECTLY CONNECTED TO FUSES, MODELS 400E/500E
④ EXCEPT MODELS 400E/500E

FUSE BLOCK DETAILS

AS OF MY 1986

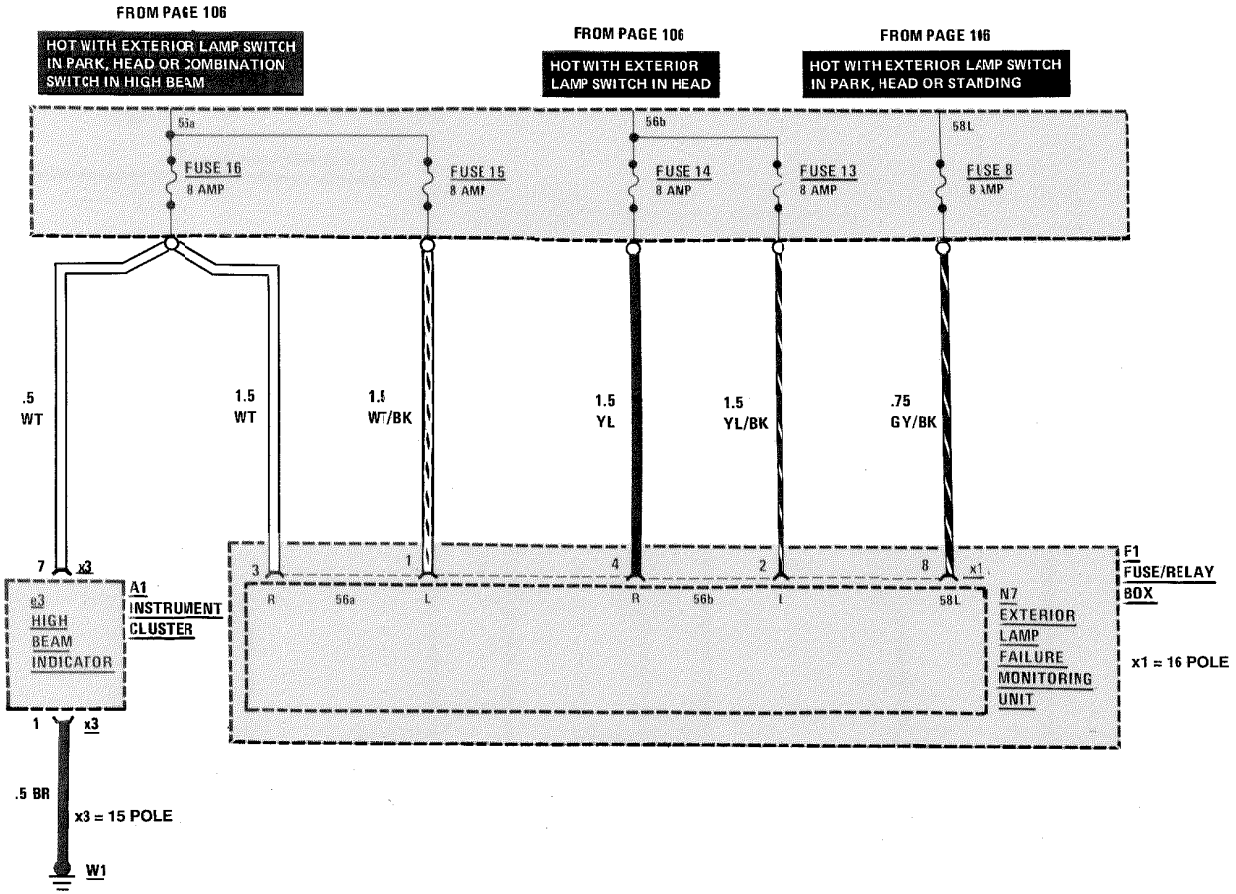

REVISIONS:

FUSE BLOCK DETAILS

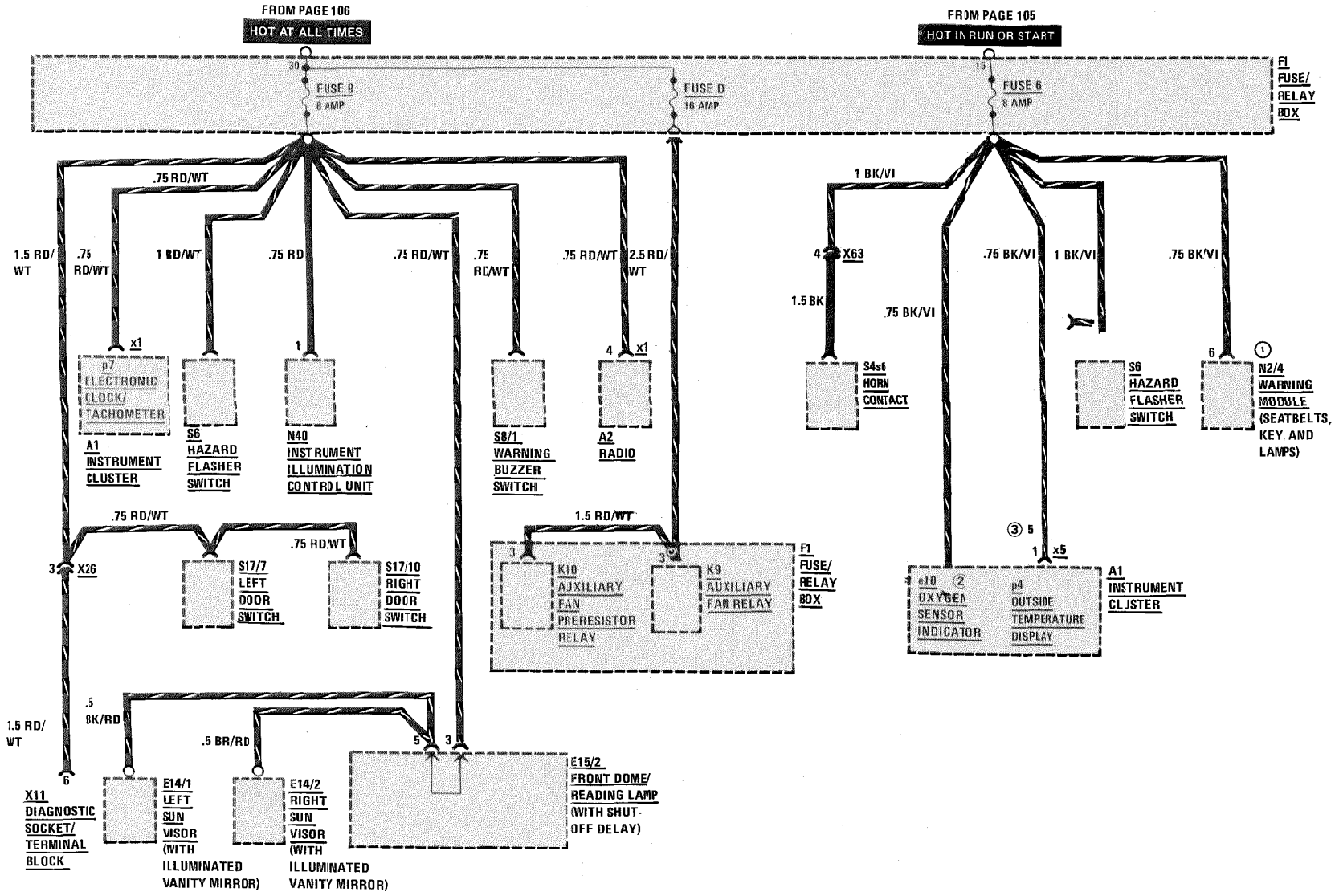

REVISIONS:
① MODEL YEAR 1986
② MODEL YEARS 1986 AND 1987 ONLY
③ AS OF MY 1989

FUSE BLOCK DETAILS

MY 1986-1989

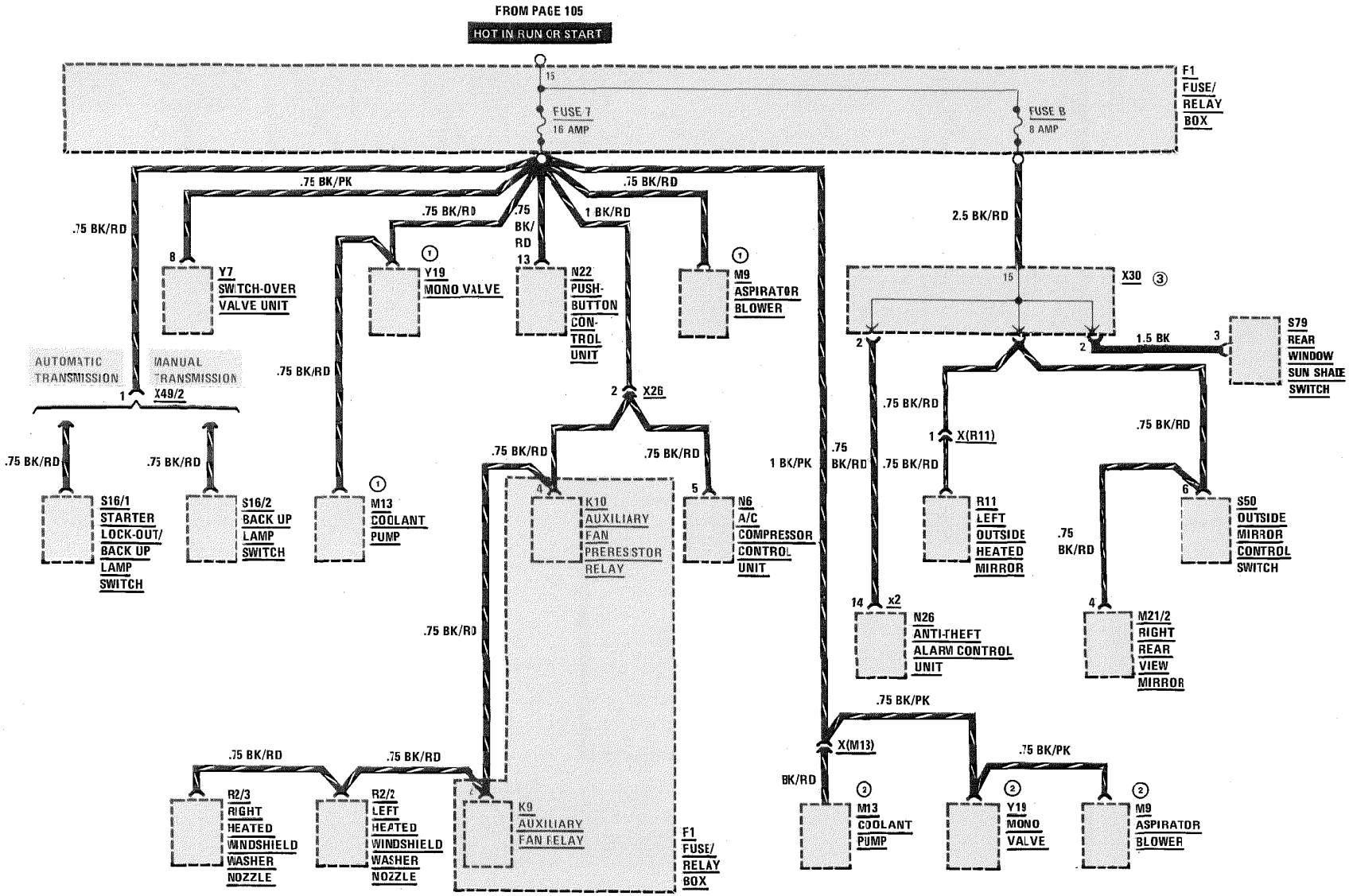

REVISIONS: ① MODEL YEAR 1986 ONLY
② AS OF MODEL YEAR 1987
③ SEE SEAT BELT EXTENDERS SECTION FOR CONNECTION ON MODEL 300CE

FUSE BLOCK DETAILS

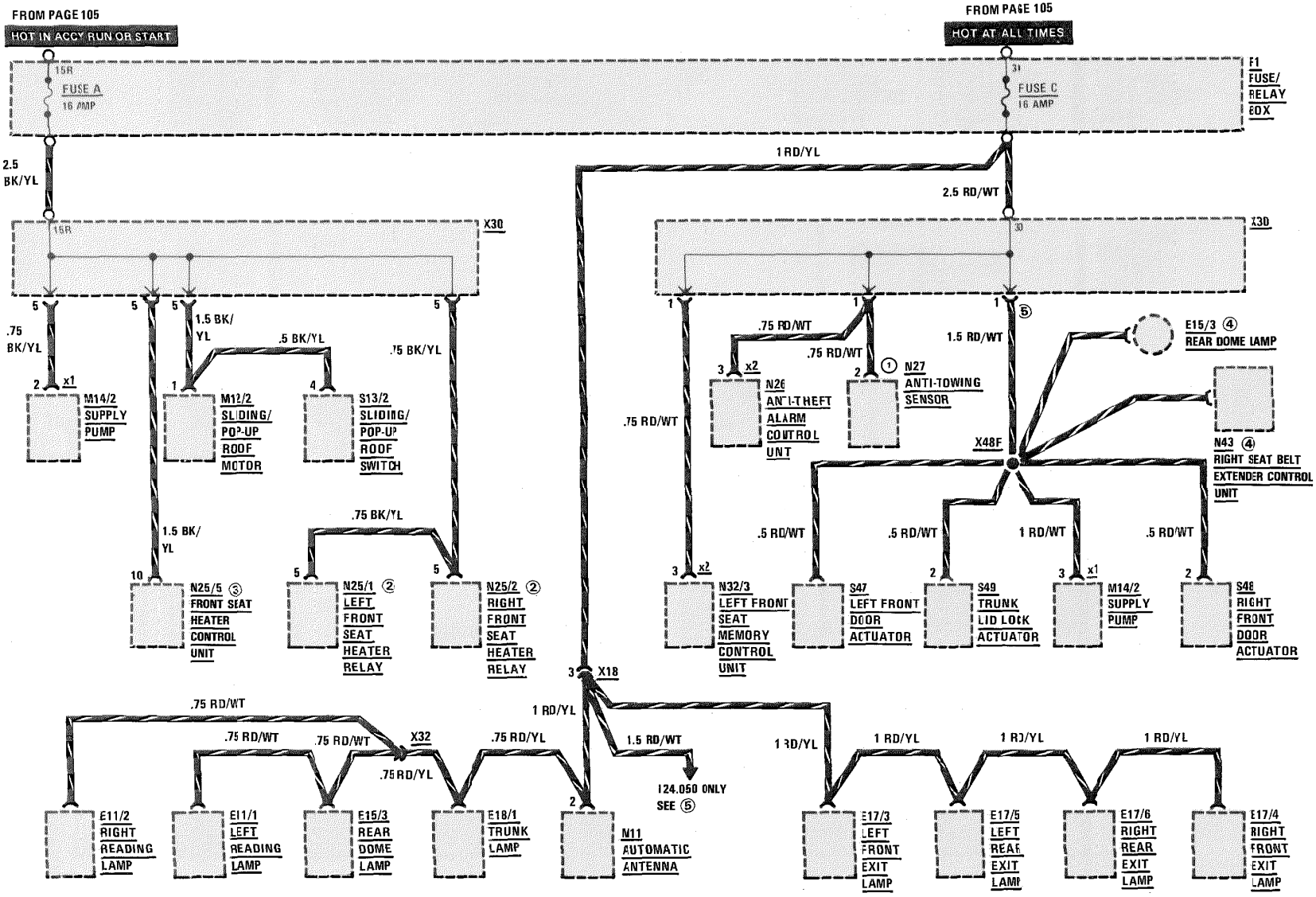

REVISIONS: ① ANTI-TOWING SENSOR NOT USED AS OF CHASSIS END NUMBER A298949, F017692
② UP TO APRIL 1987 PRODUCTION
③ AS OF APRIL 1987 PRODUCTION
④ 300CE ONLY
⑤ ON 300CE MODELS ONLY, POWER IS NOT TAKEN FROM X30 BUT RATHER FROM X18 PIN 3

AS OF MY 1990

FUSE BLOCK DETAILS

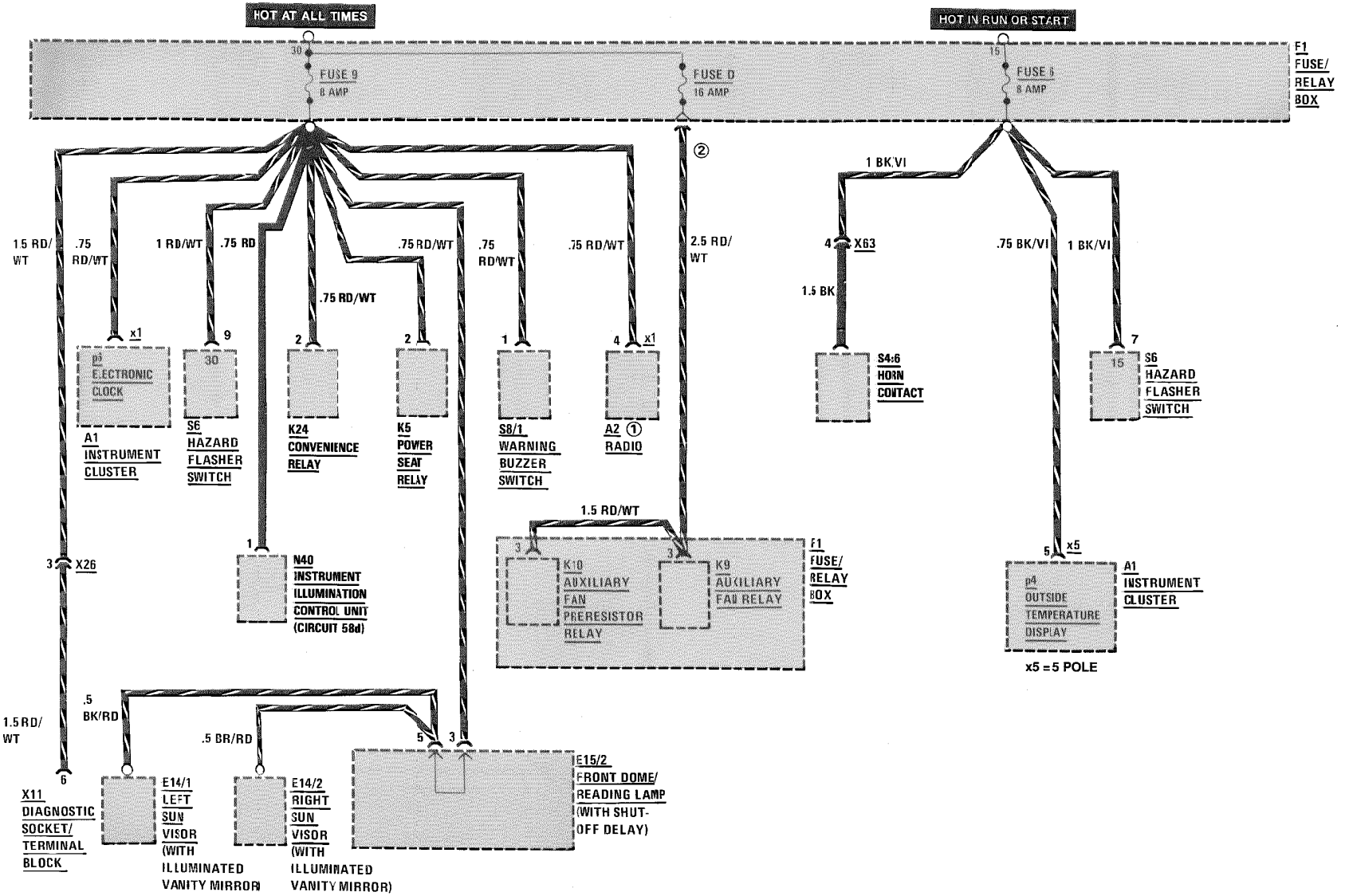

REVISIONS: ① A2/4 AS OF MY 1992

② EXCEPT MODELS 400E/500E

FUSE BLOCK DETAILS

AS OF MY 1990

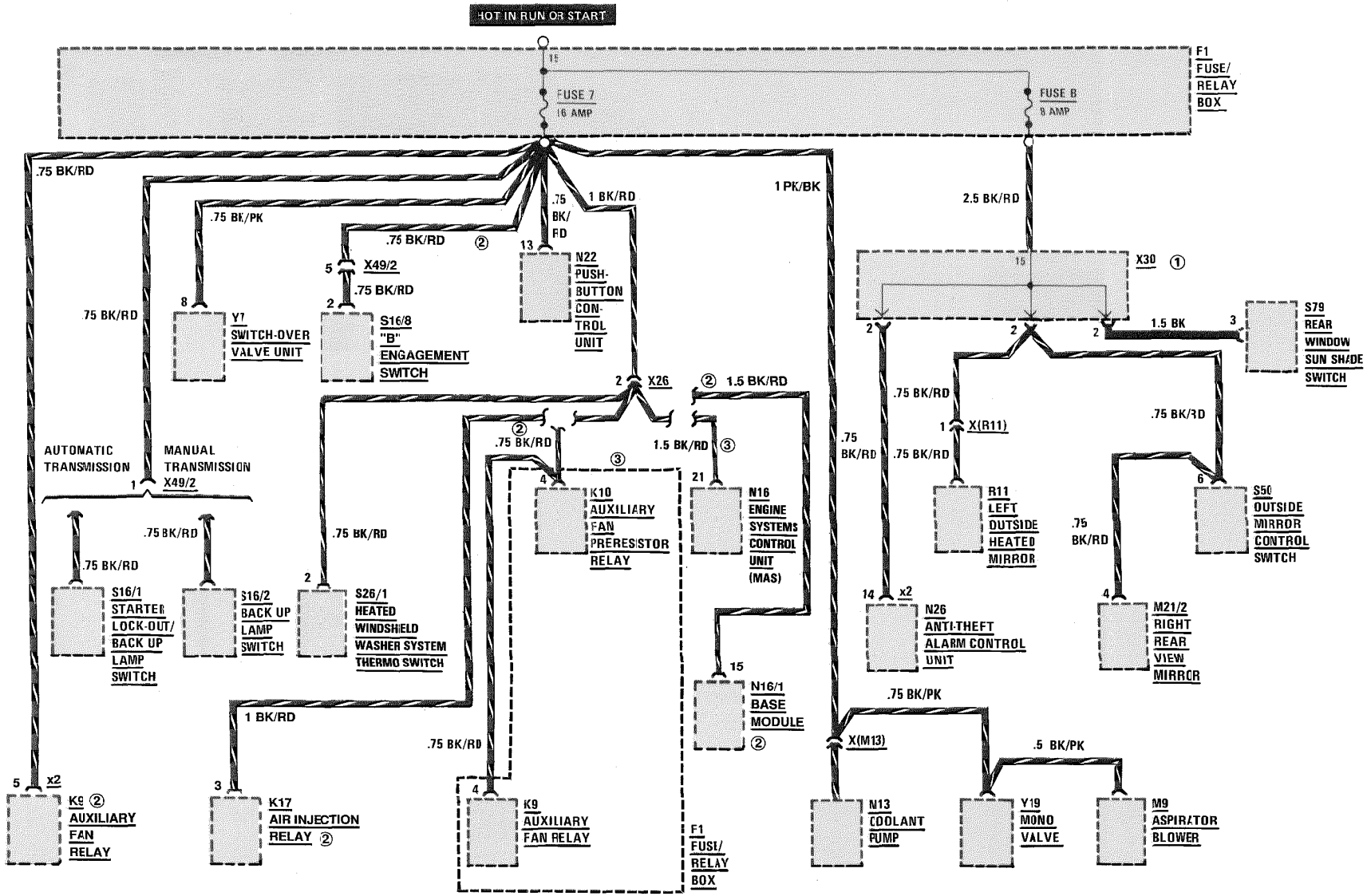

REVISIONS: ① SEE SEAT BELT EXTENDERS SECTION FOR CONNECTION ON MODEL 300CE
② MODELS 400E/500E
③ EXCEPT MODELS 400E/500E

FUSE BLOCK DETAILS

AS OF MY 1990

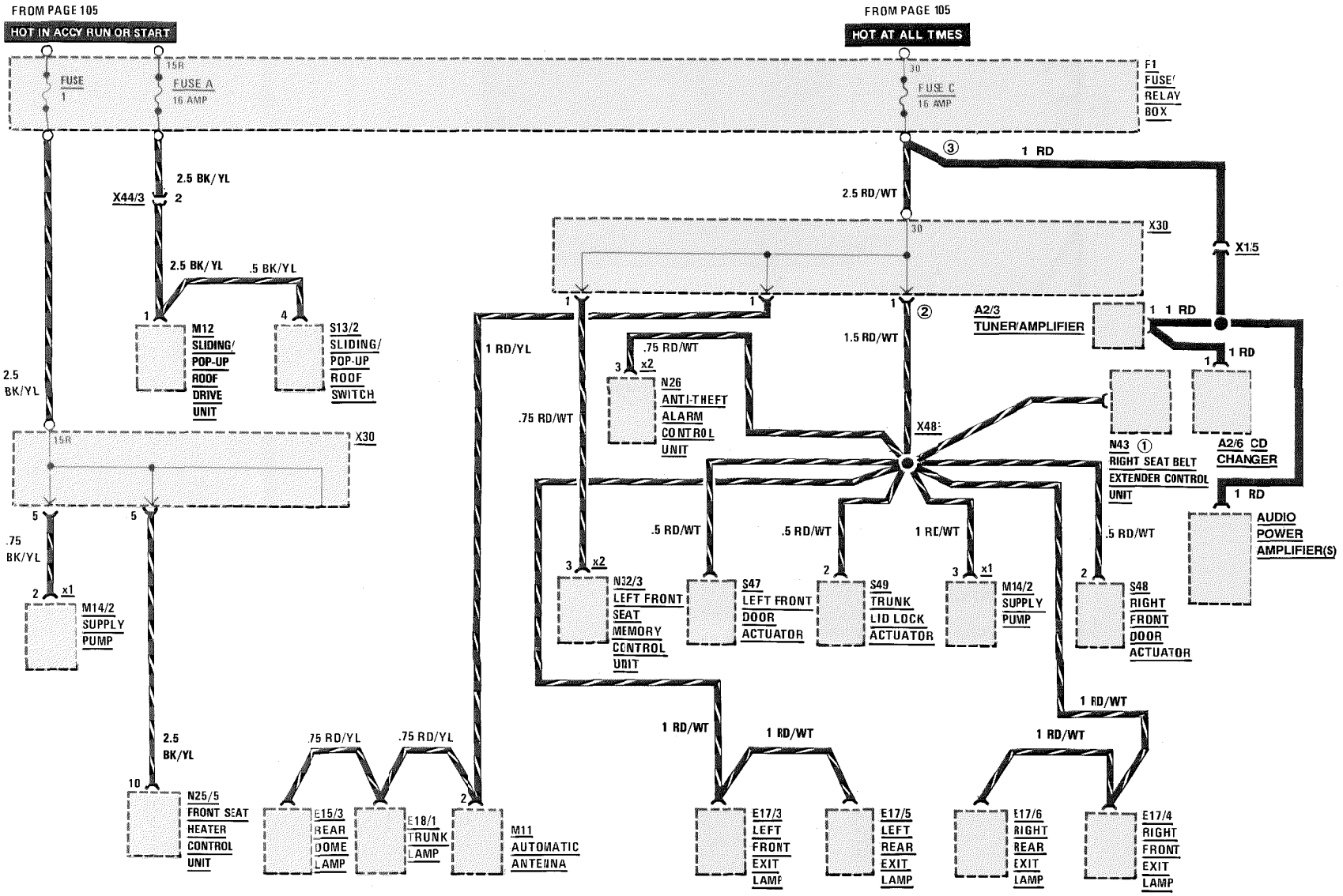

REVISIONS: ① 300 CE ONLY
② ON MODEL 300CE, POWER IS TAKEN FROM X18 PIN 3, NOT X30
③ AS OF MY 1992

START

MY 1986-1989

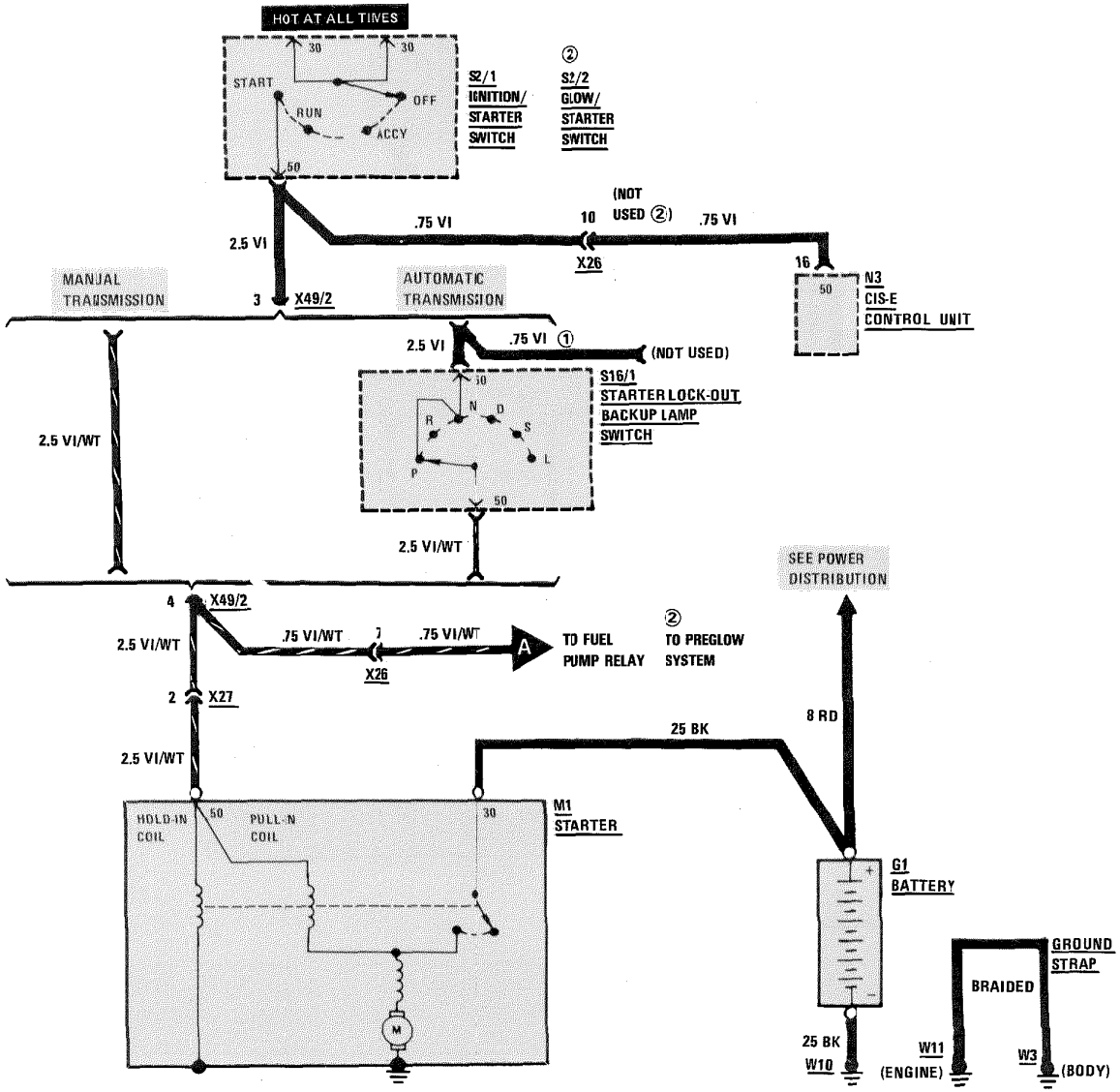

REVISIONS: ① MY 1986/MY 1987/MY 1988 ONLY

② DIESEL MODELS

START

AS OF MY 1990

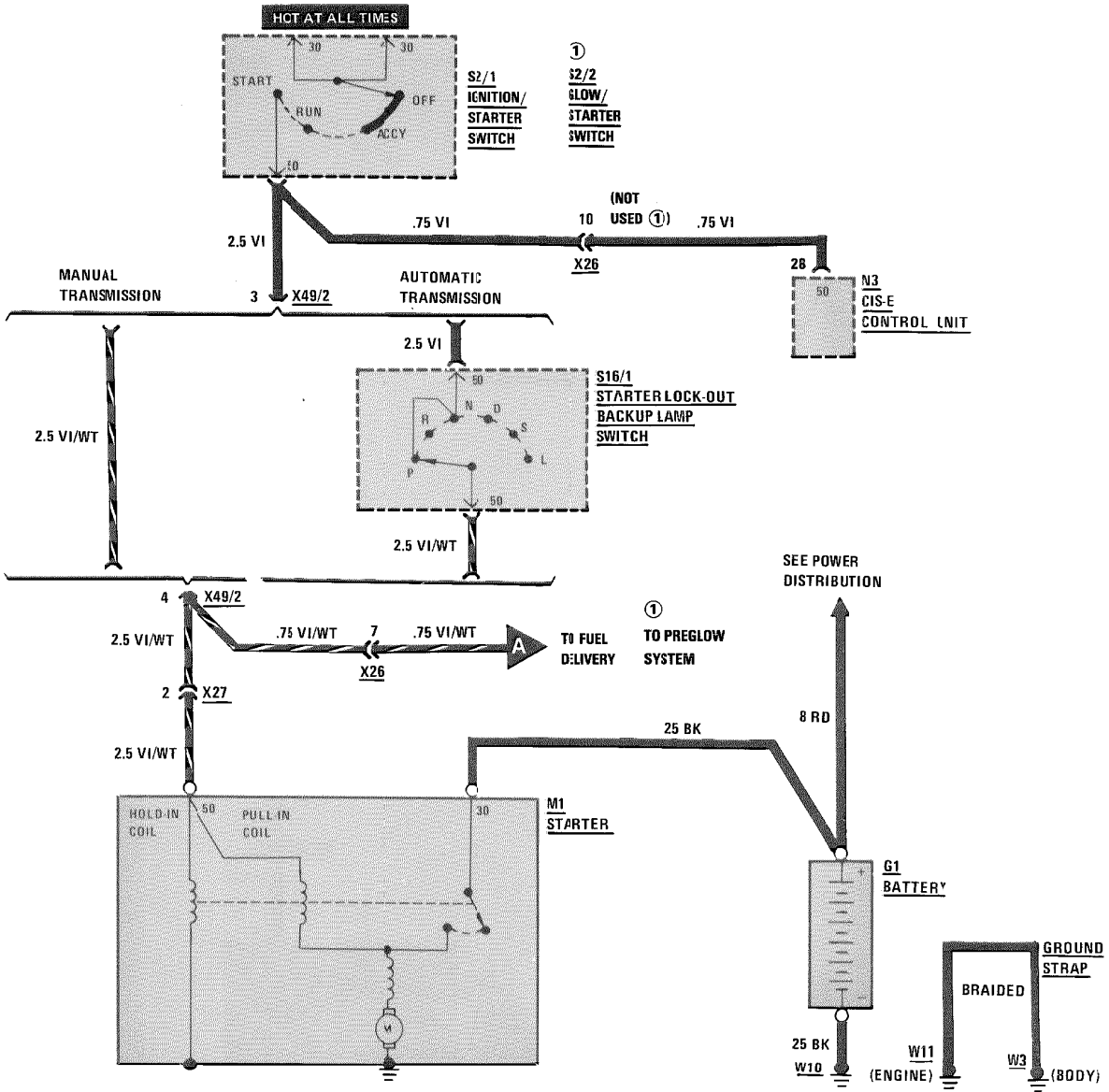

REVISIONS: ① DIESEL MODELS ONLY

START

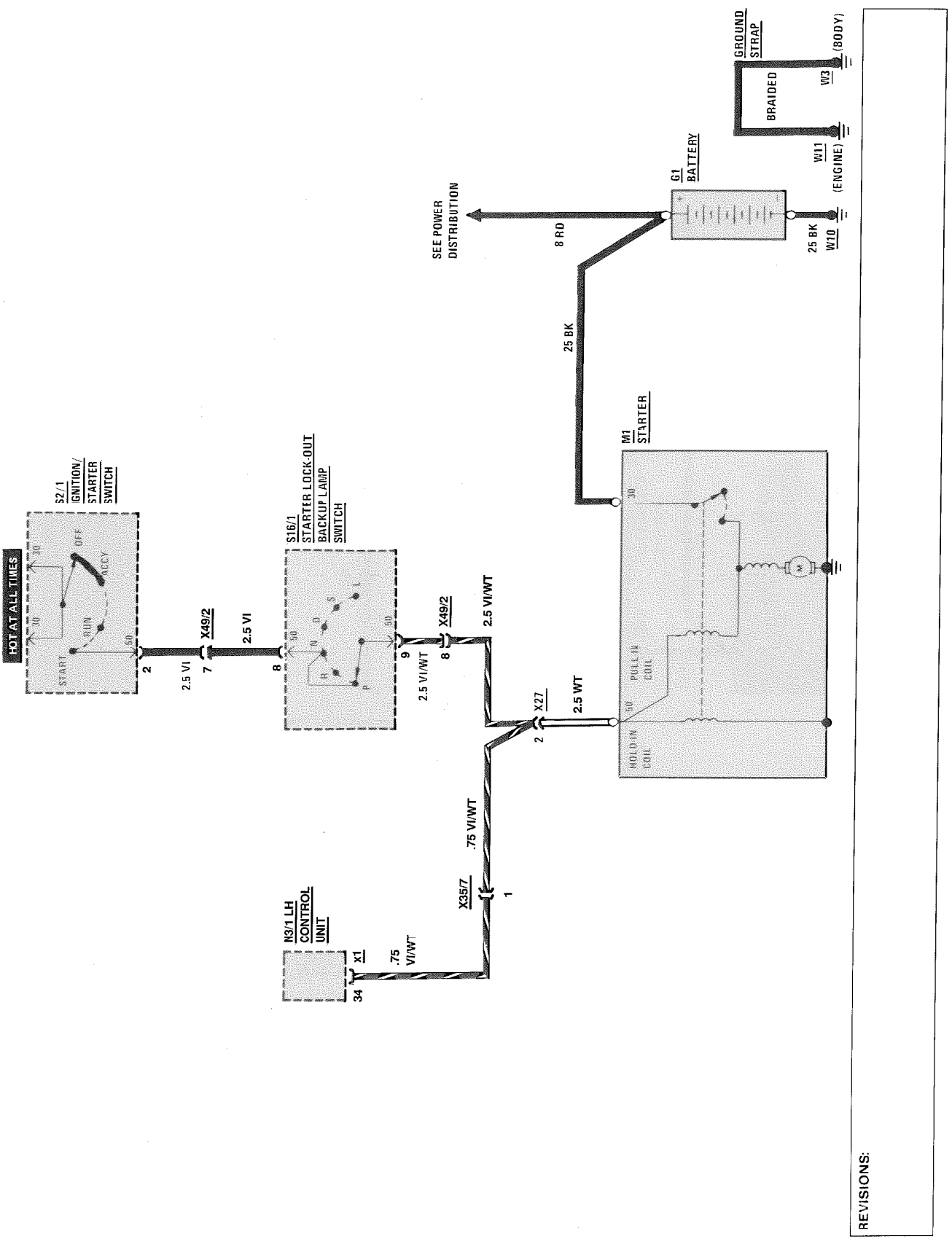
HOT AT ALL TIMES
S2/1 IGNITION/ STARTER SWITCH
OFF
ACCY
RUN
START
30
50
2
2.5 VI
X49/2
7
2.5 VI
8
S16/1 STARTER LOCK-OUT BACKUP LAMP SWITCH
N
D
S
L
R
P
9
2.5 VI/WT
X49/2
8
2.5 VI/WT
X27
2
2.5 WT
M1 STARTER
30
50
PULL-IN COIL
HOLD-IN COIL
25 BK
8 RD
SEE POWER DISTRIBUTION
G1 BATTERY
25 BK
W10
W11 (ENGINE)
GROUND STRAP
BRAIDED
W3 (BODY)
N3/1 LH CONTROL UNIT
X1
34
.75 VI/WT
X35/7
.75 VI/WT
1
REVISIONS:

PREGLOW SYSTEM

MY 1987
DIESEL

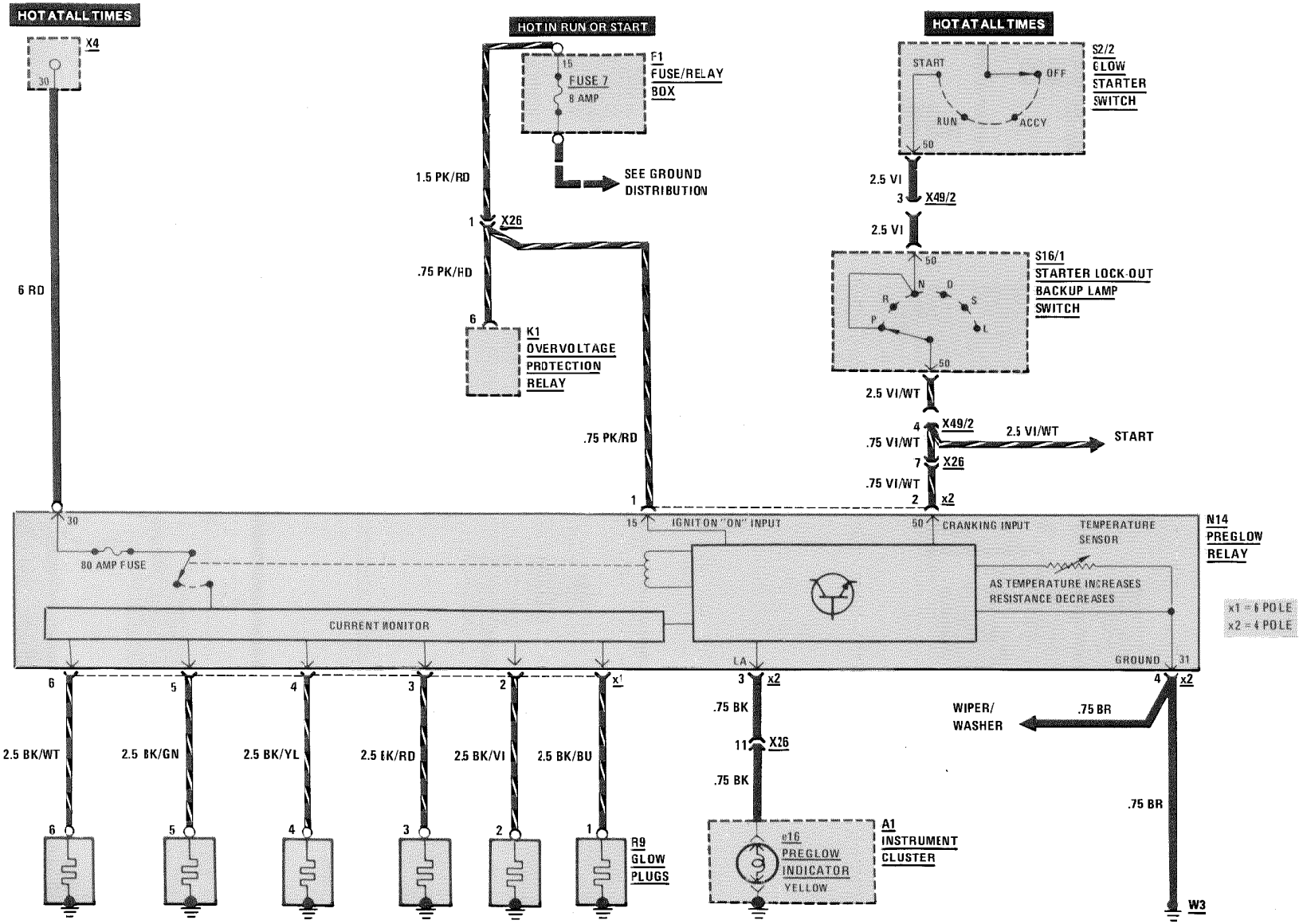

REVISIONS:

PREGLOW SYSTEM

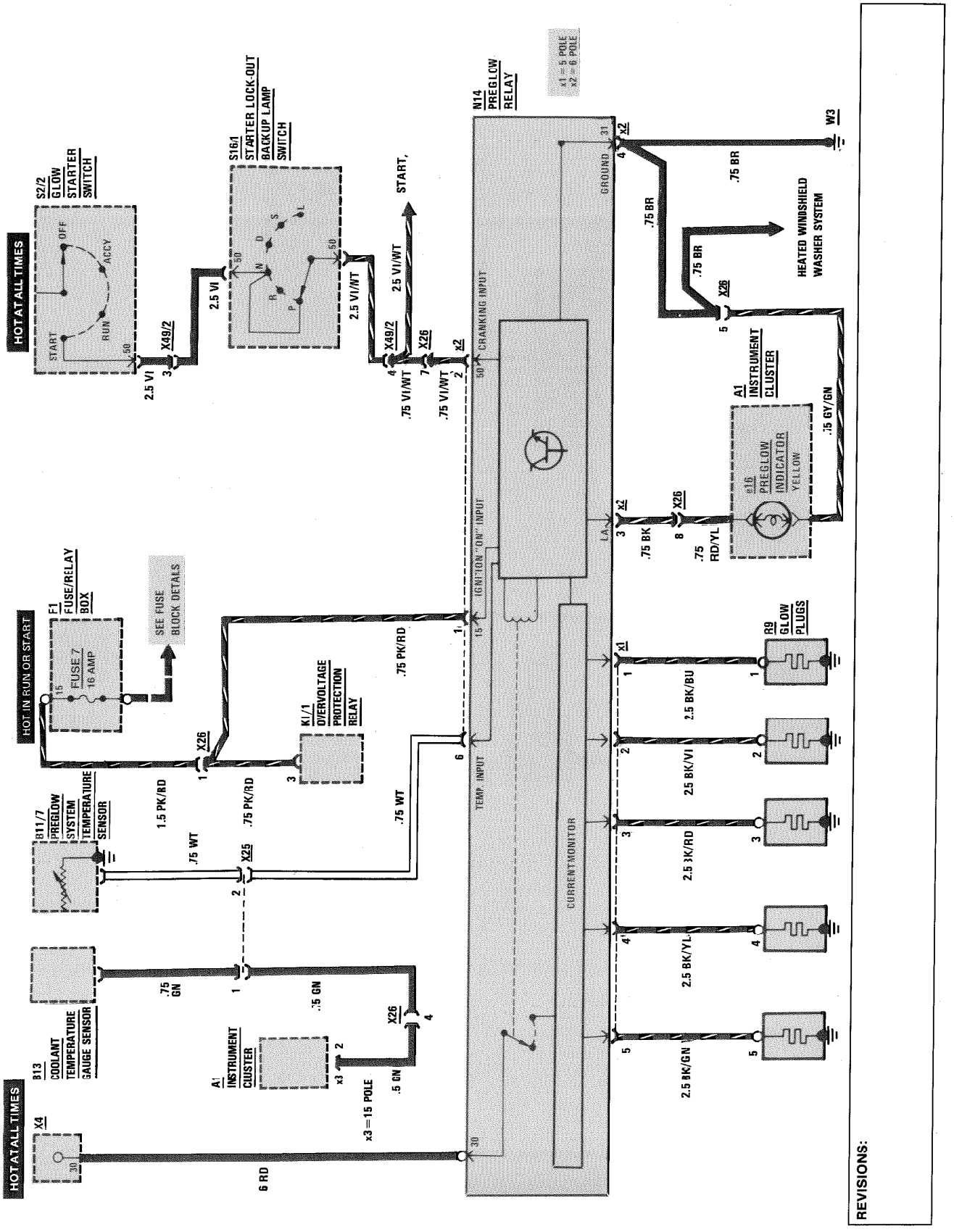

IGNITION / DIAGNOSTIC SOCKET / KICK-DOWN

MY 1986-1989

GASOLINE

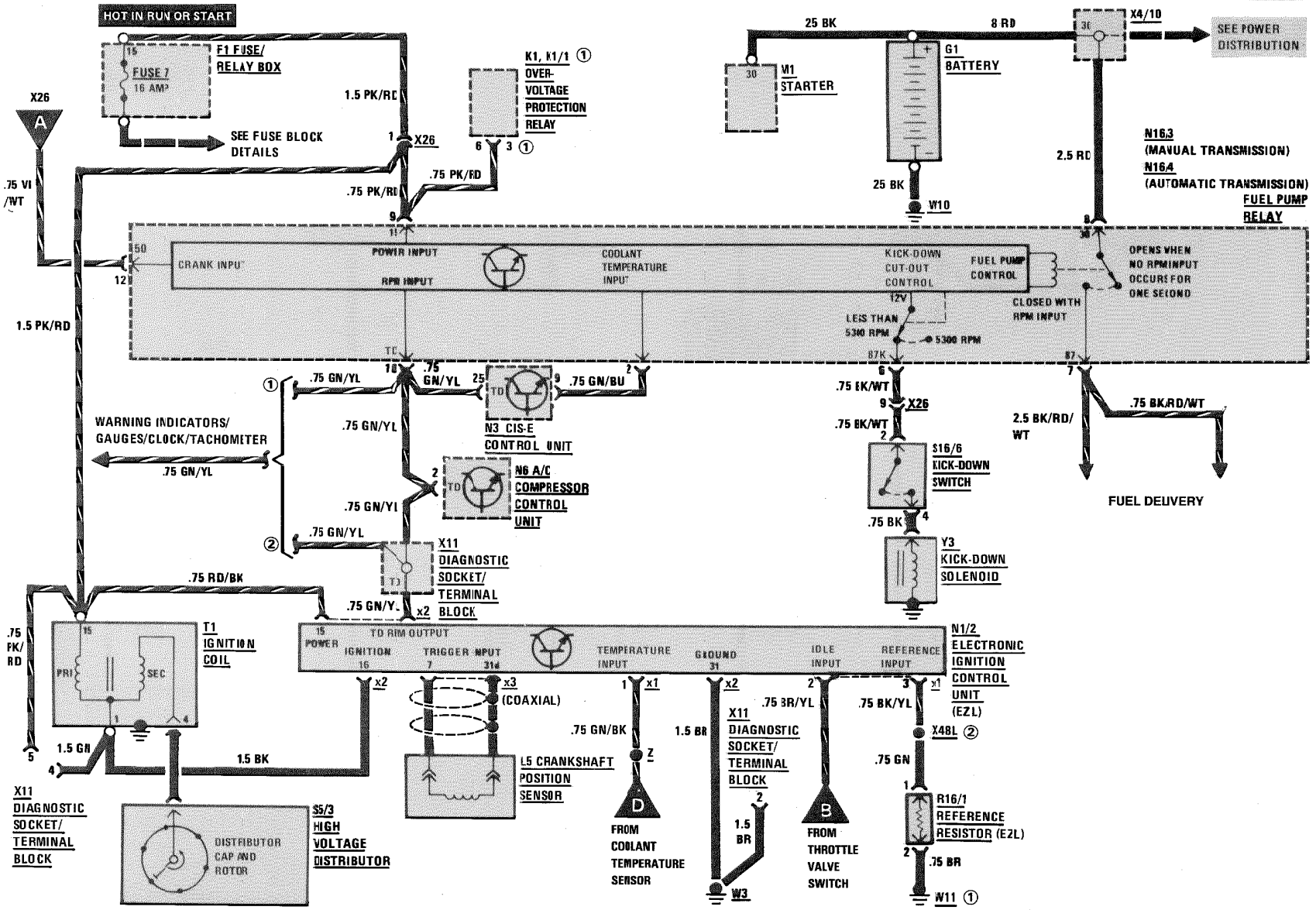

REVISIONS: ① AS OF MY 1988
② MY 1986-1988

KICKDOWN, AIR INJECTION, A/C COMPRESSOR

AS OF MY 1990

GASOLINE

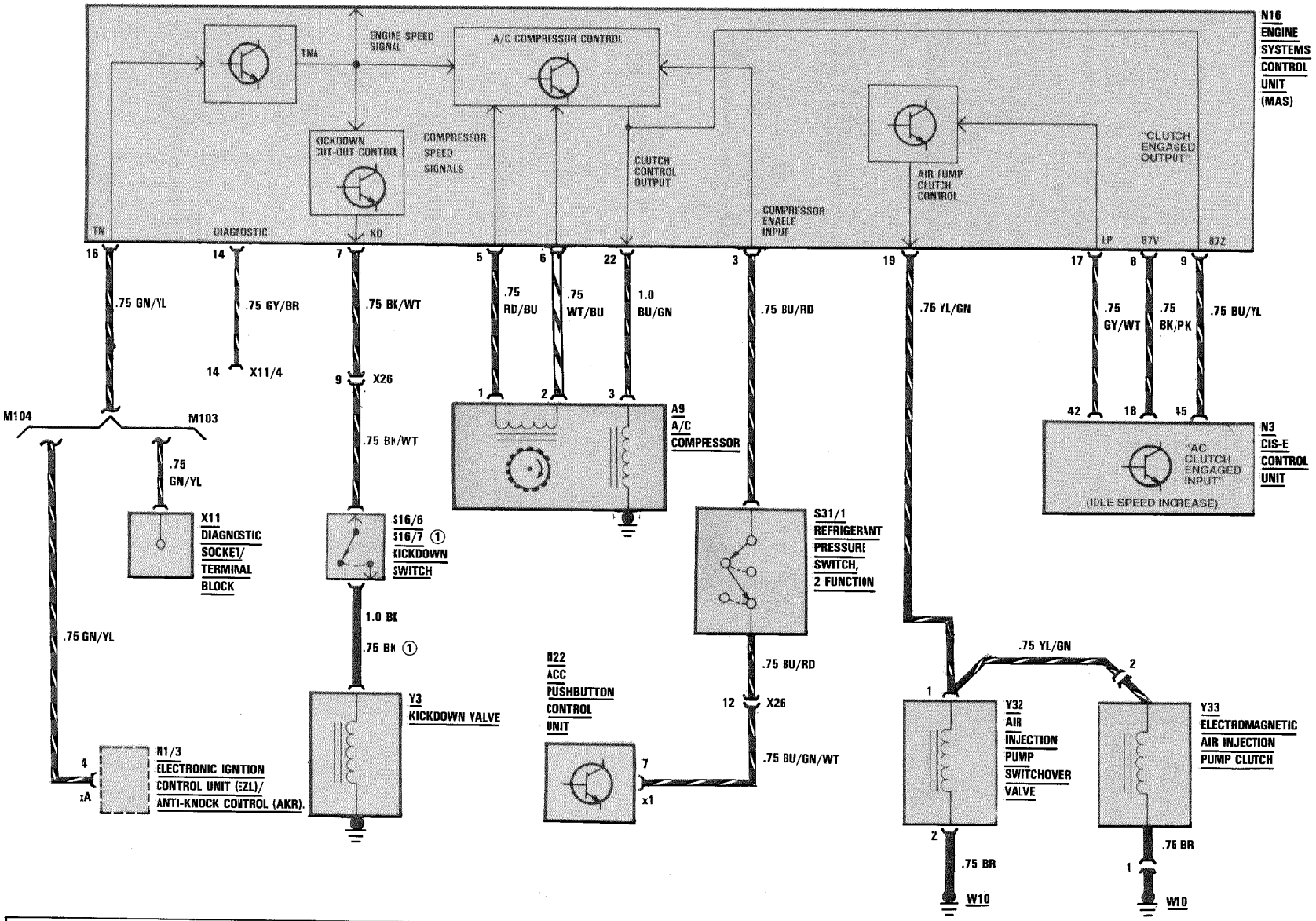

REVISIONS: ① COUPE

IGNITION/DIAGNOSTIC SOCKET

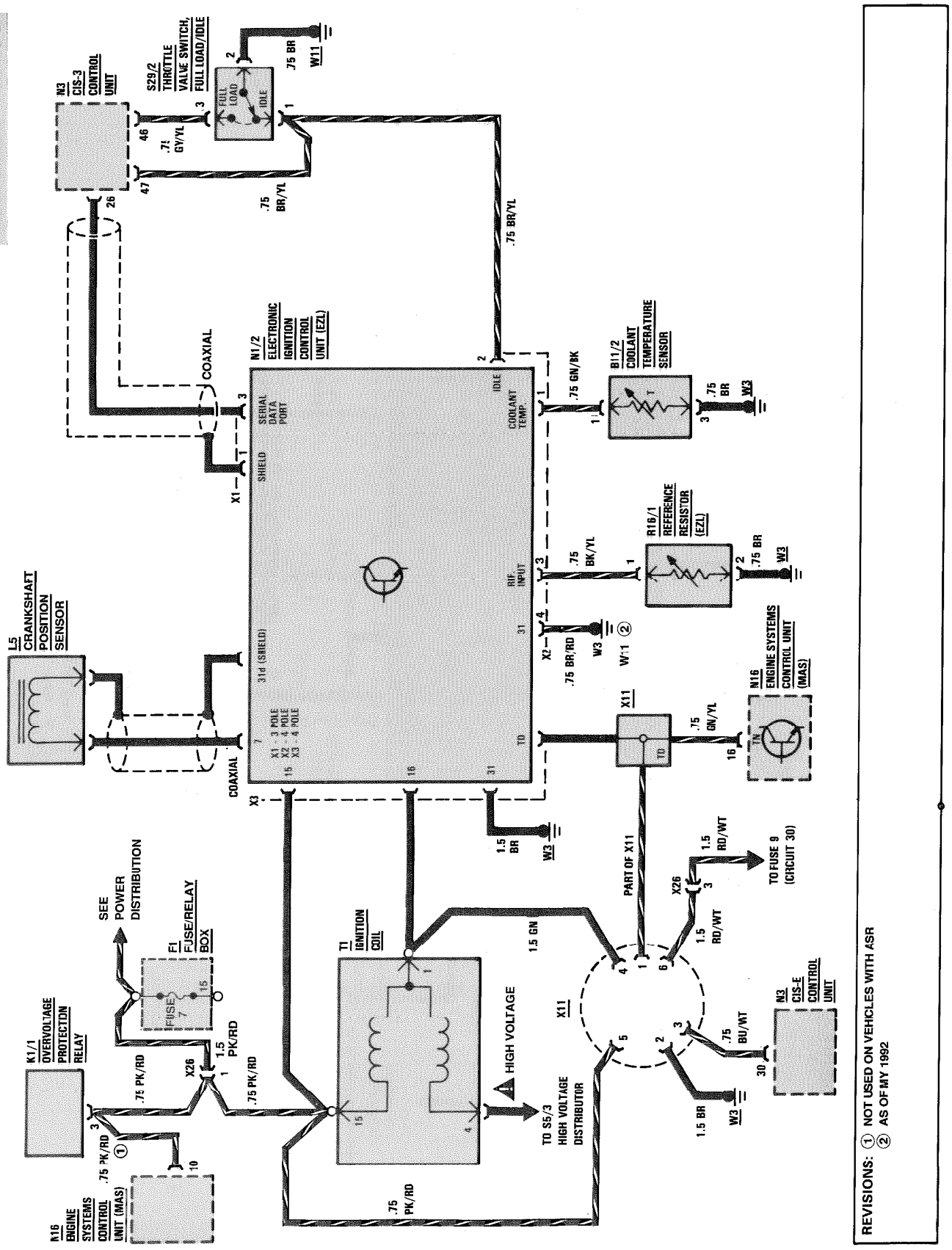

IGNITION/DIAGNOSTIC SOCKET

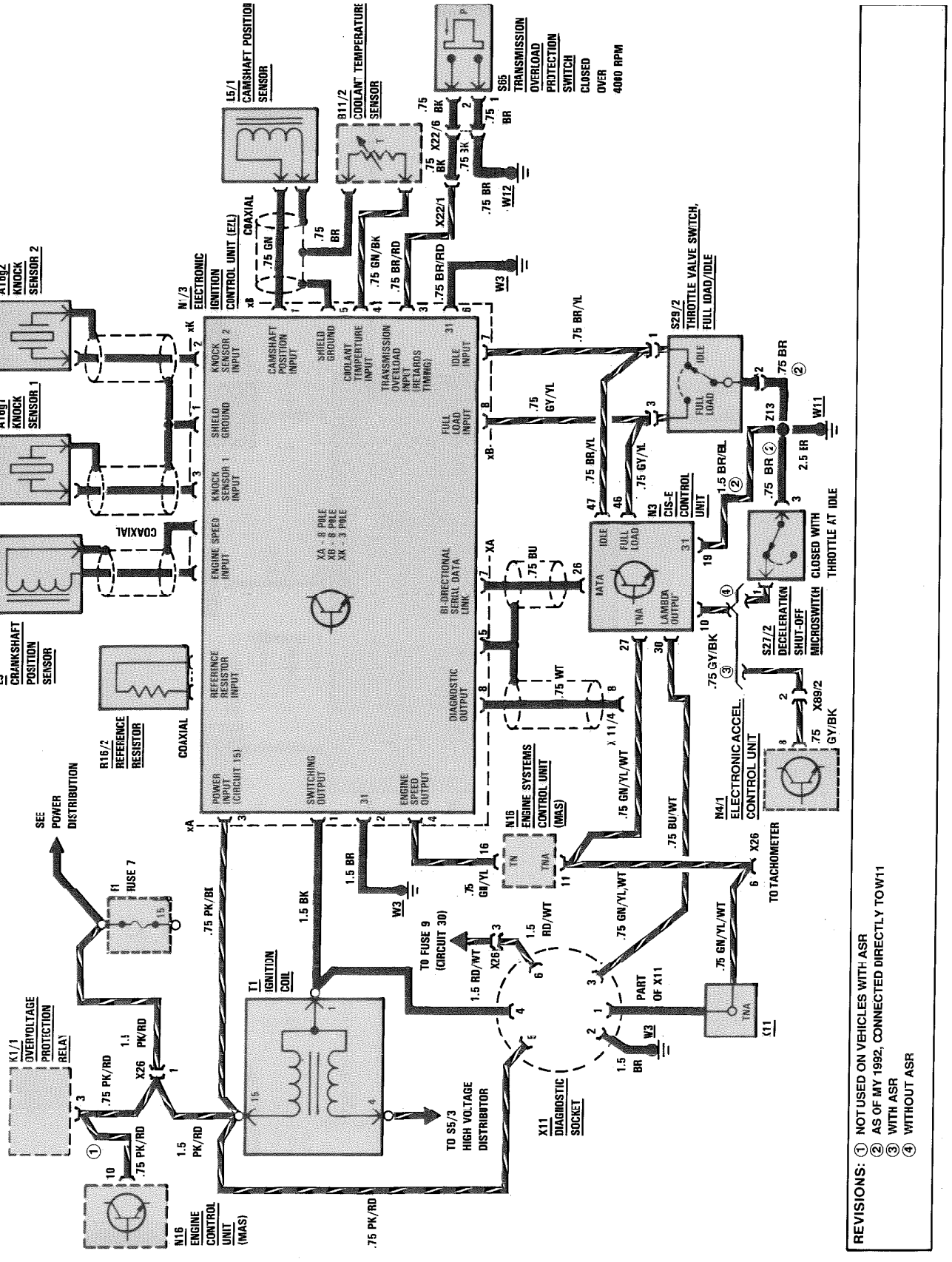

IGNITION/DIAGNOSTIC SOCKET

AS OF MY 1992

400E/500E

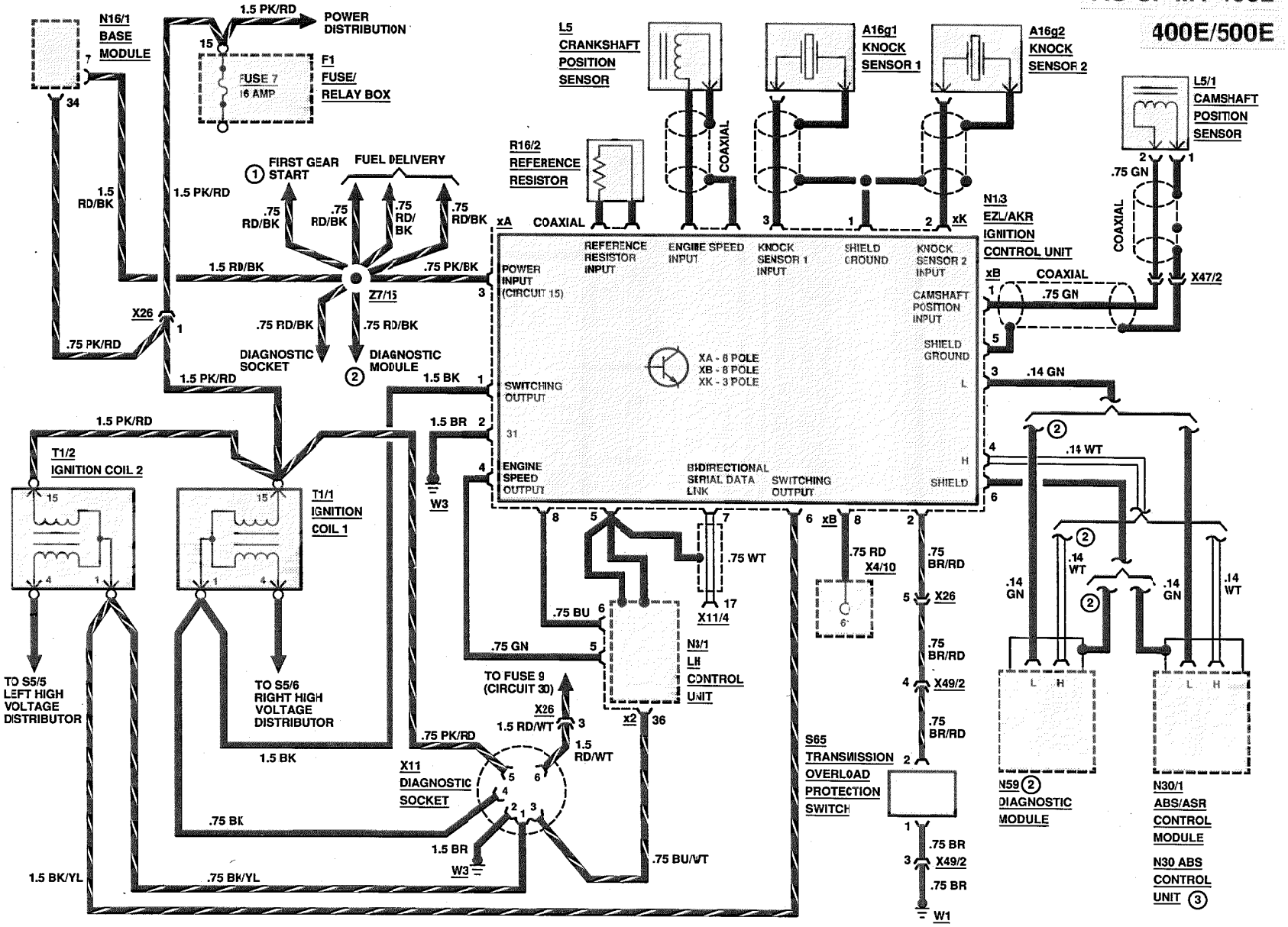

REVISIONS: (1) MODEL 400E
(2) CALIFORNIA VERSION
(3) W/O ASR

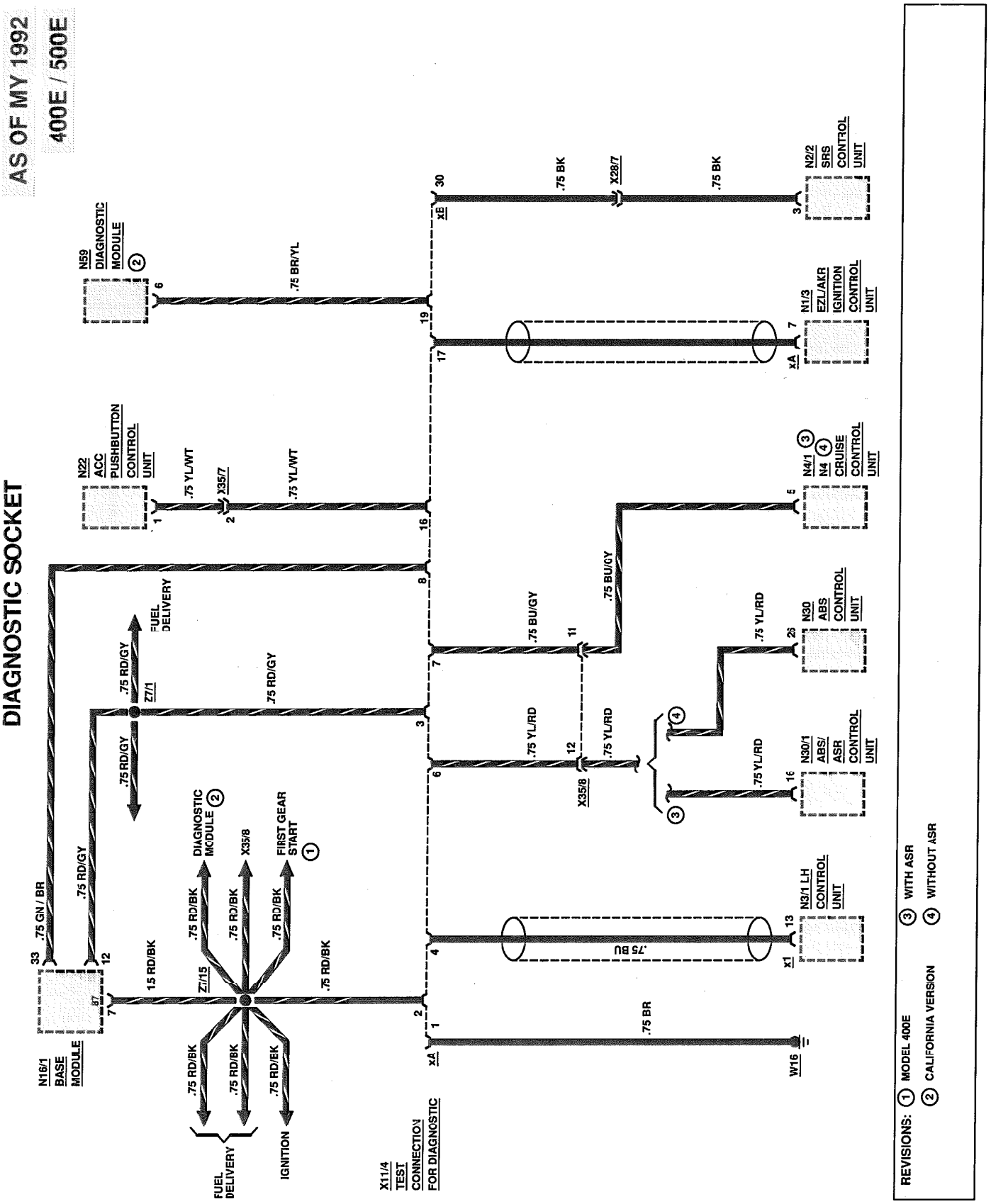
AS OF MY 1992
400E / 500E
DIAGNOSTIC SOCKET
N16/1 BASE MODULE
N59 DIAGNOSTIC MODULE
N22 ACC PUSHBUTTON CONTROL UNIT
N3/1 LH CONTROL UNIT
N30/1 ABS/ ASR CONTROL UNIT
N30 ABS CONTROL UNIT
N4/1 N4 CRUISE CONTROL UNIT
N1/3 EZL/AKR IGNITION CONTROL UNIT
N2/2 SRS CONTROL UNIT
X11/4 TEST CONNECTION FOR DIAGNOSTIC
W16
FUEL DELIVERY
IGNITION
DIAGNOSTIC MODULE
FIRST GEAR START
X35/8
X35/7
X28/7
Z7/1
Z7/15
.75 GN / BR
.75 RD/GY
.75 RD/BK
.75 RD/BK
.75 RD/BK
.75 RD/BK
.75 RD/BK
.75 RD/BK
.75 RD/BK
.75 RD/GY
.75 RD/GY
.75 BR/YL
.75 YL/WT
.75 YL/WT
.75 BU/GY
.75 BU/GY
.75 YL/RD
.75 YL/RD
.75 YL/RD
.75 YL/RD
.75 BU
.75 BR
.75 BK
.75 BK
REVISIONS: ① MODEL 400E ② CALIFORNIA VERSION ③ WITH ASR ④ WITHOUT ASR

DIAGNOSTIC MODULE (CARB)

AS OF MY 1992
400E/500E
CALIFORNIA ONLY

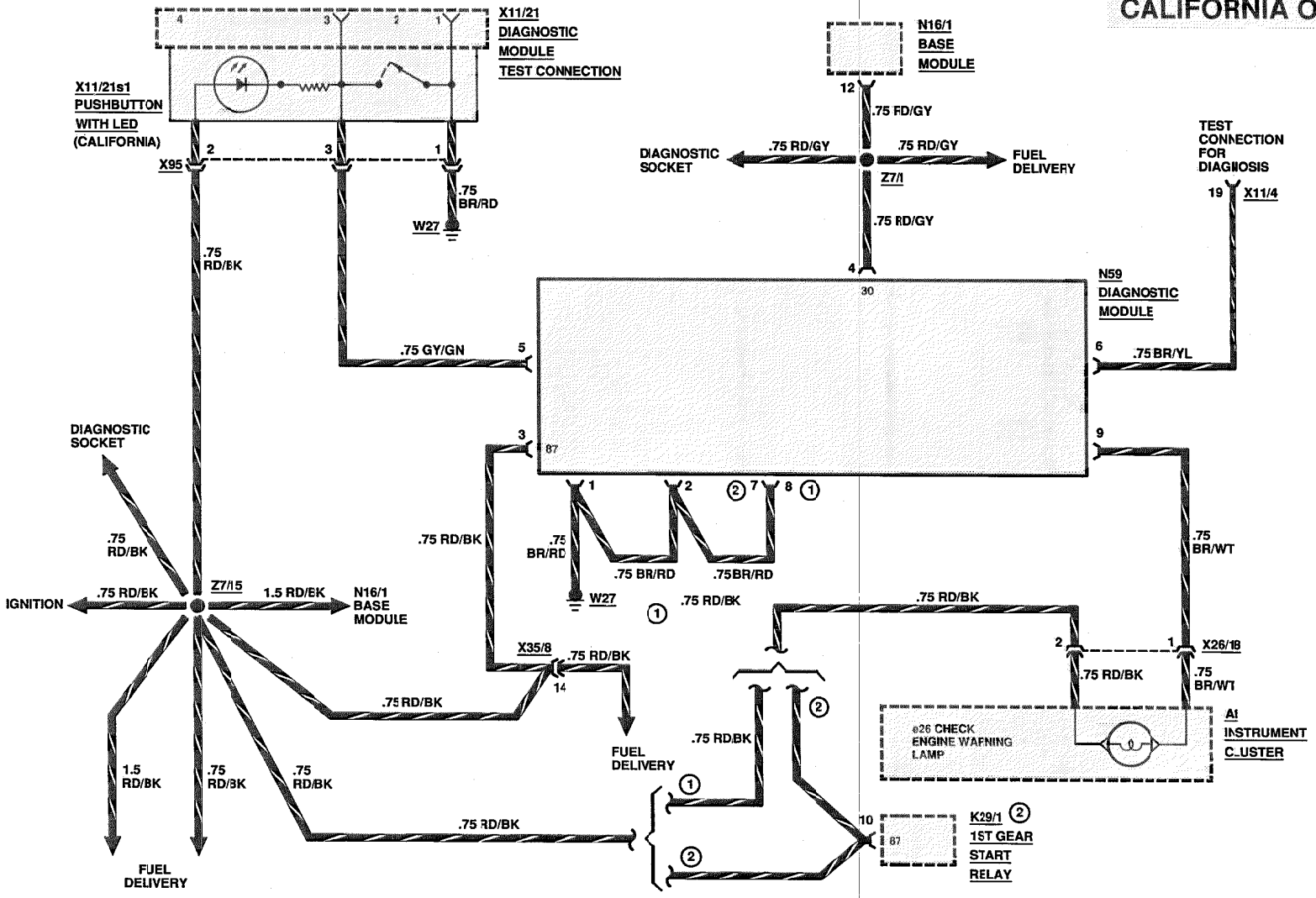

REVISIONS: ① MODEL 500E
② MODEL 400E

FUEL DELIVERY

MY 1986-1989

GASOLINE

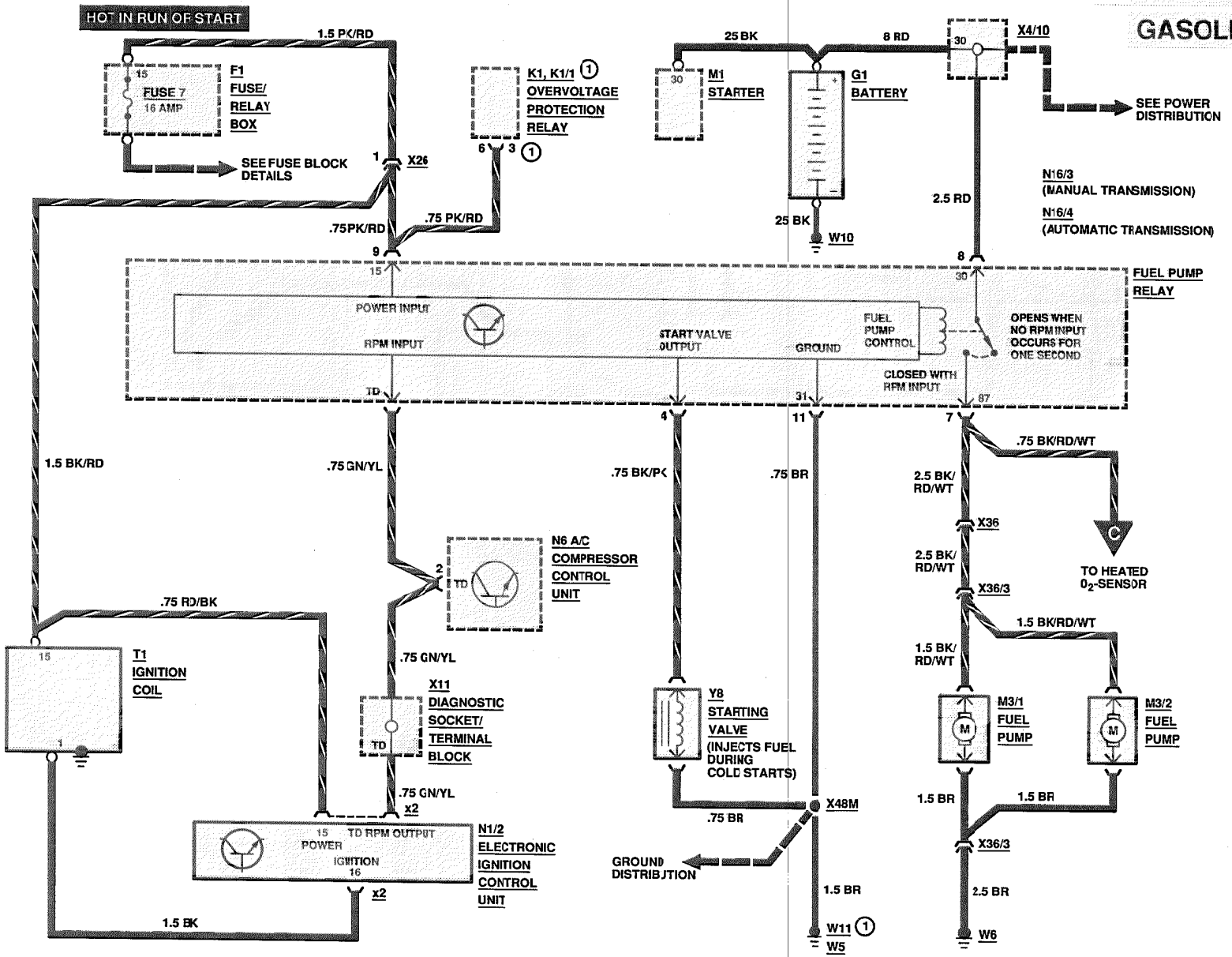

REVISIONS: (1) AS OF MY 1988

FUEL DELIVERY/O_2 SENSOR

AS OF MY 1990
GASOLINE

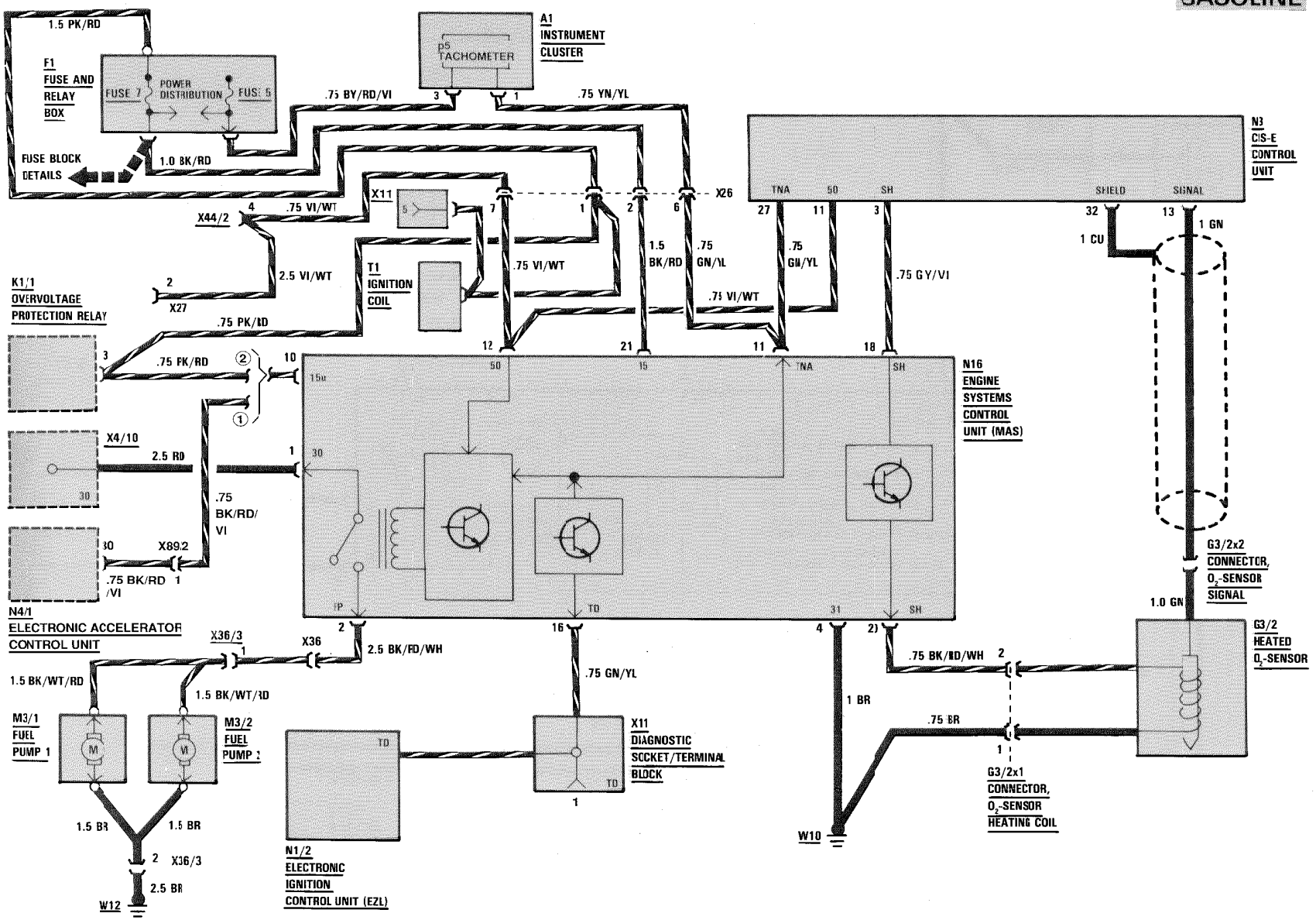

REVISIONS: ① VEHICLES WITH ASR
② VEHICLES W/O ASR

FUEL DELIVERY/O_2 SENSOR

AS OF MY 1990

300CE

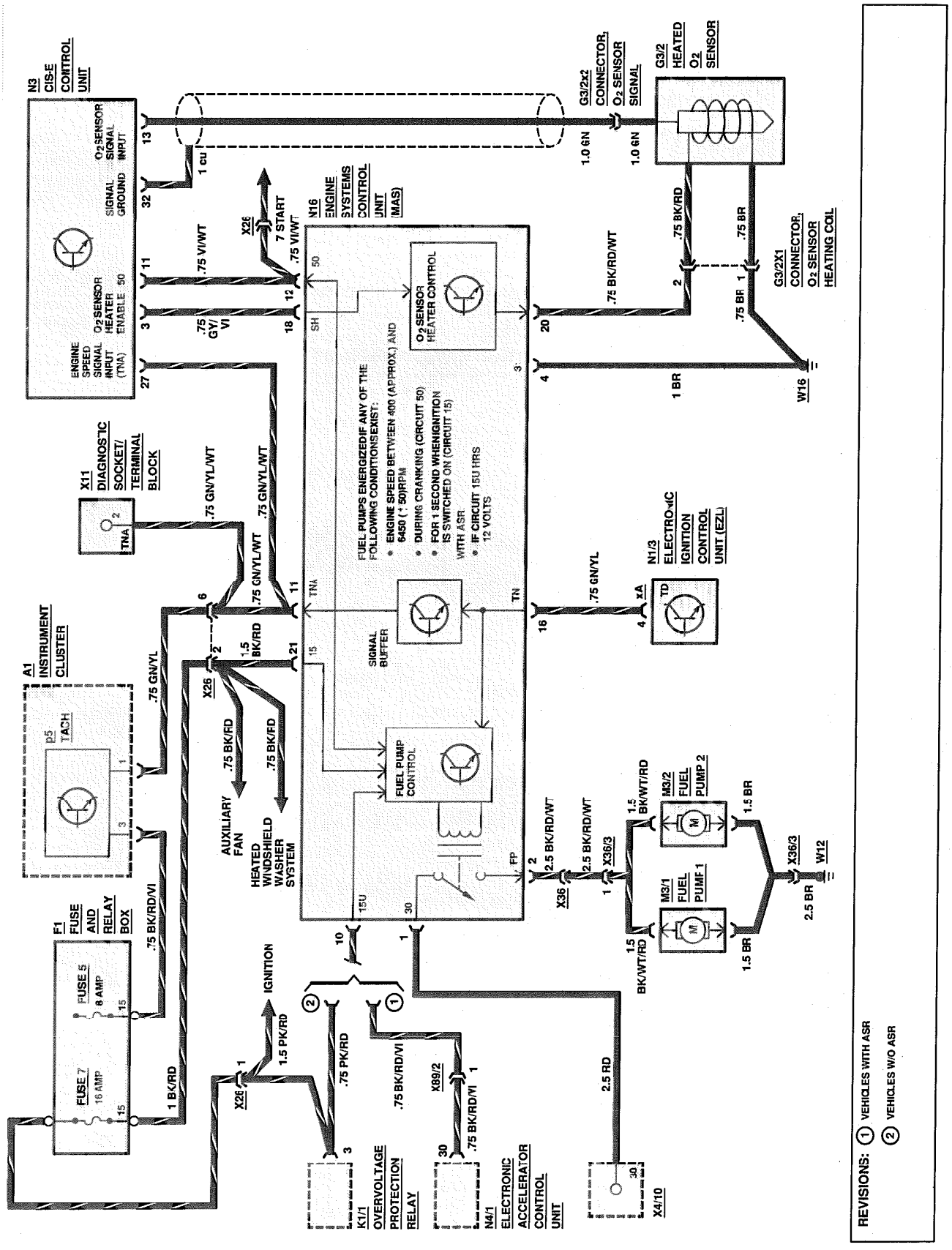

FUEL DELIVERY

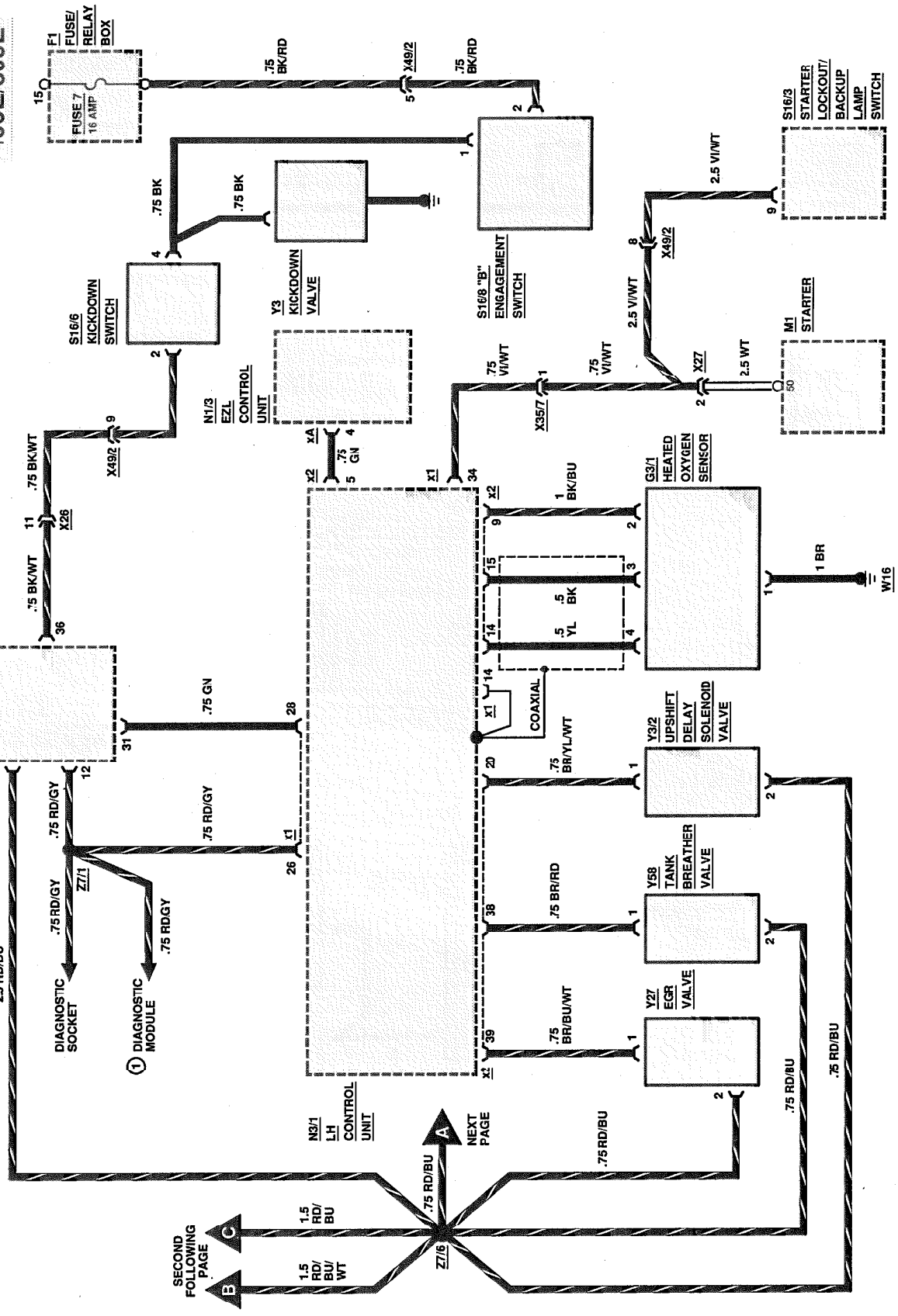

REVISIONS:
① CALIFORNIA VERSION

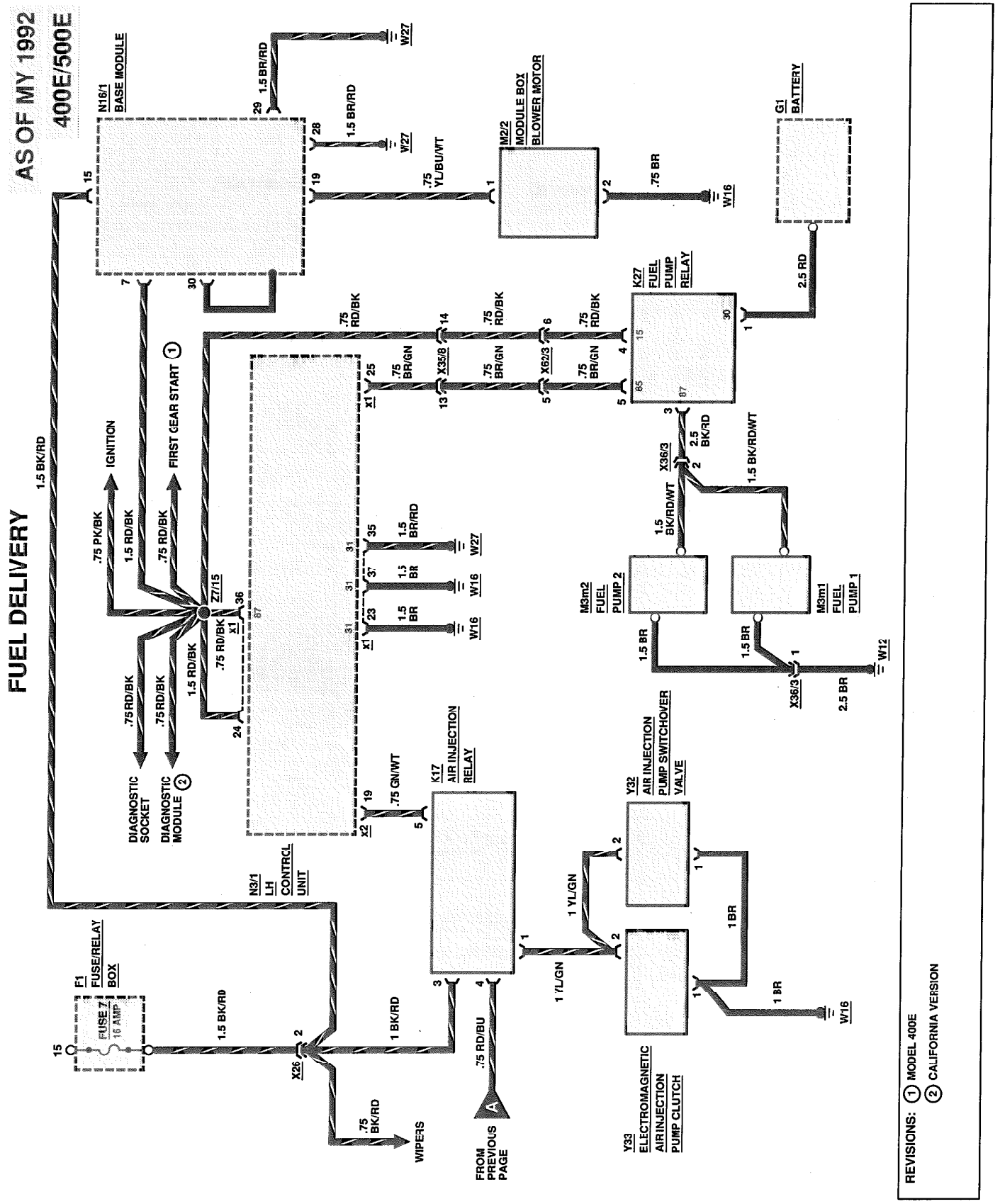
FUEL DELIVERY
AS OF MY 1992
400E/500E
1.5 BK/RD
N16/1 BASE MODULE
F1 FUSE/RELAY BOX
FUSE 7 16 AMP
N3/1 LH CONTRCL UNIT
X26
IGNITION
FIRST GEAR START
DIAGNOSTIC SOCKET
DIAGNOSTIC MODULE
Z7/15
K17 AIR INJECTION RELAY
K27 FUEL PUMP RELAY
M2/2 MODULE BOX BLOWER MOTOR
G1 BATTERY
M3m2 FUEL PUMP 2
M3m1 FUEL PUMP 1
Y32 AIR INJECTION PUMP SWITCHOVER VALVE
Y33 ELECTROMAGNETIC AIRINJECTION PUMP CLUTCH
X35/8
X62/3
X36/3
X1
X2
W27
W16
W12
WIPERS
FROM PREVIOUS PAGE
.75 PK/BK
.75 RD/BK
1.5 RD/BK
.75 BR/GN
1.5 BR/RD
1.5 BR
.75 GN/WT
1 YL/GN
1 BR
1 BK/RD
.75 RD/BU
.75 BK/RD
1.5 BK/RD/WT
2.5 BK/RD
.75 YL/BU/WT
2.5 RD
2.5 BR
REVISIONS: ① MODEL 400E
② CALIFORNIA VERSION

FUEL DELIVERY

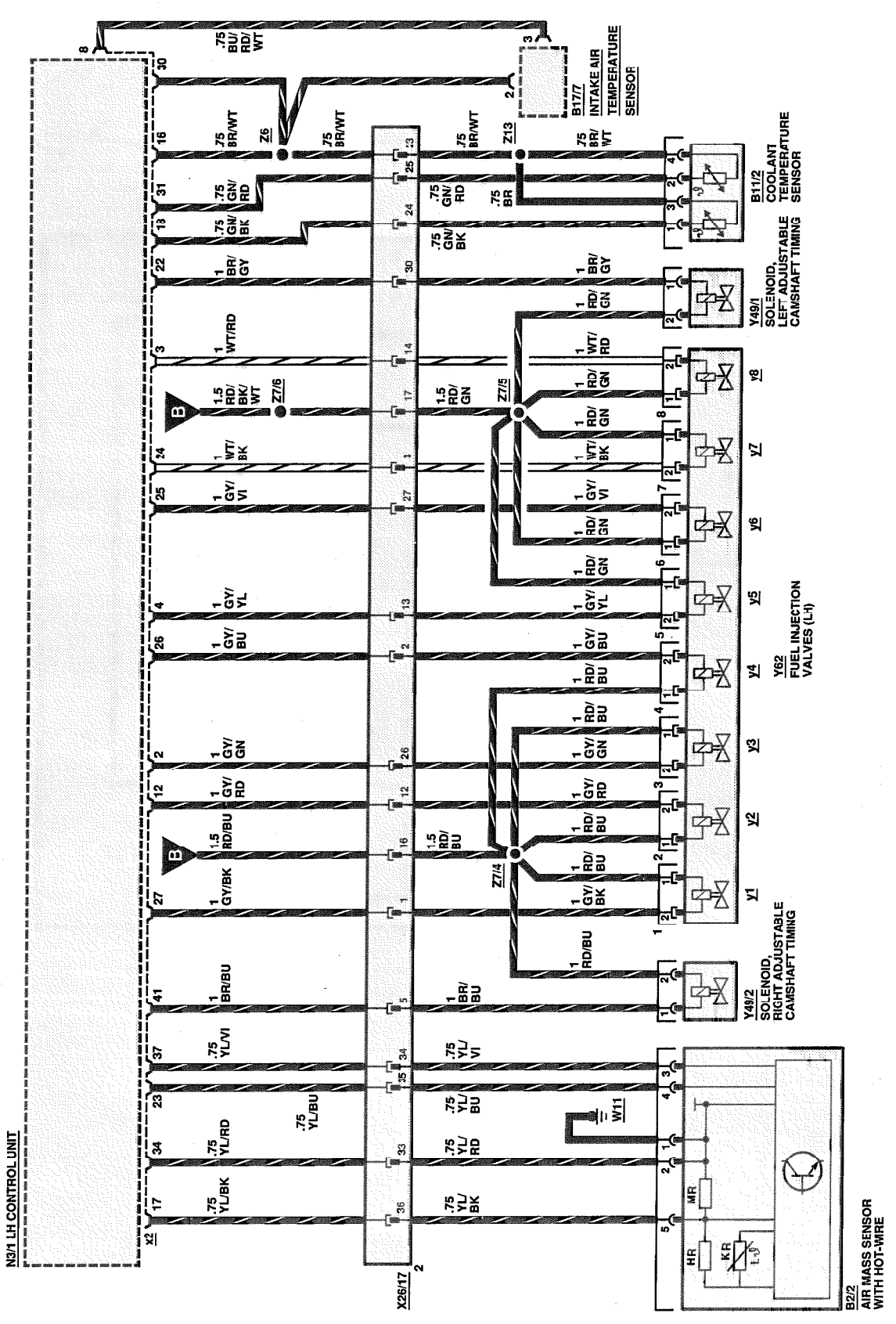

REVISIONS:

ELECTRONIC DIESEL SYSTEM

MY 1987

DIESEL

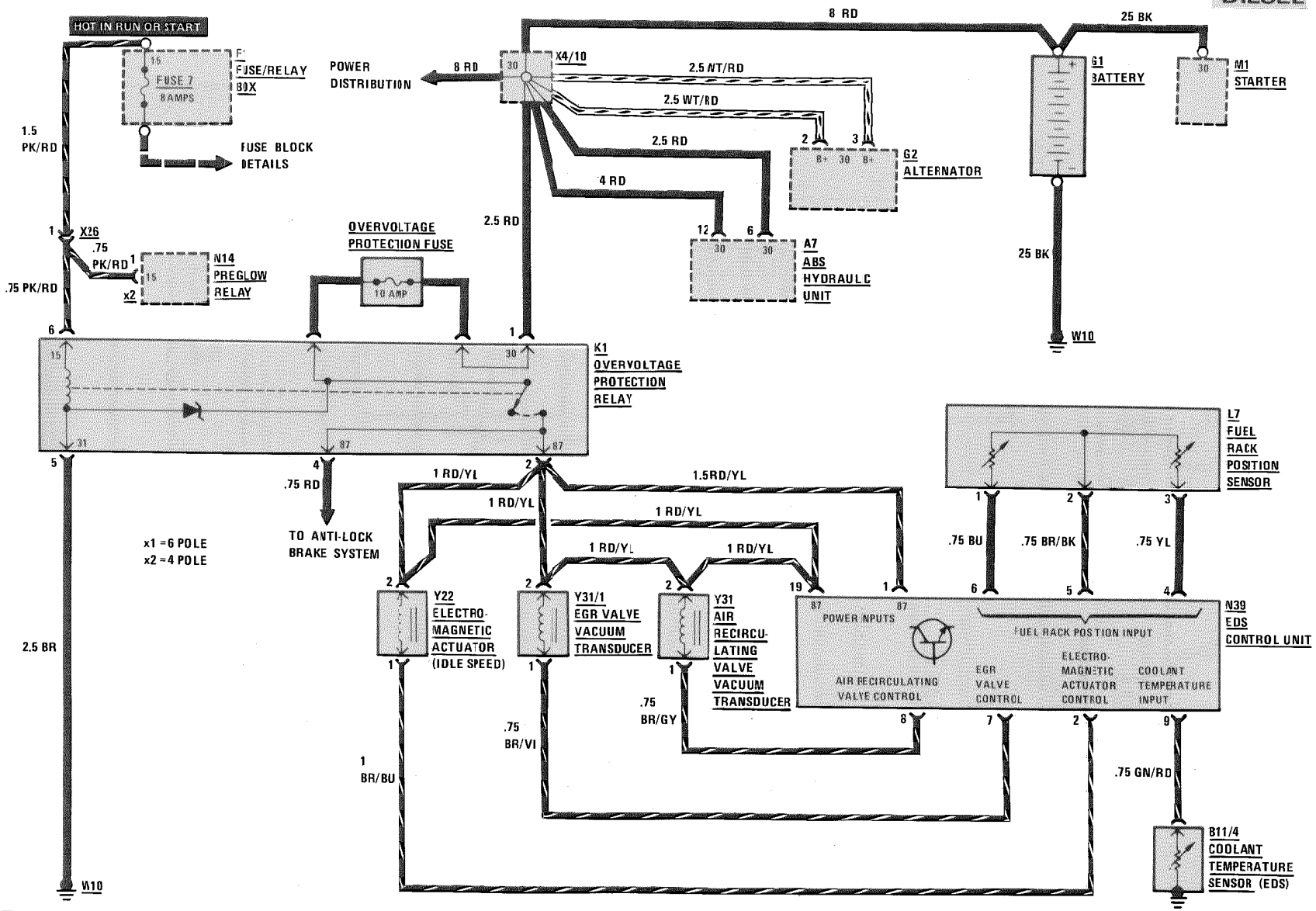

REVISIONS:

ELECTRONIC DIESEL SYSTEM

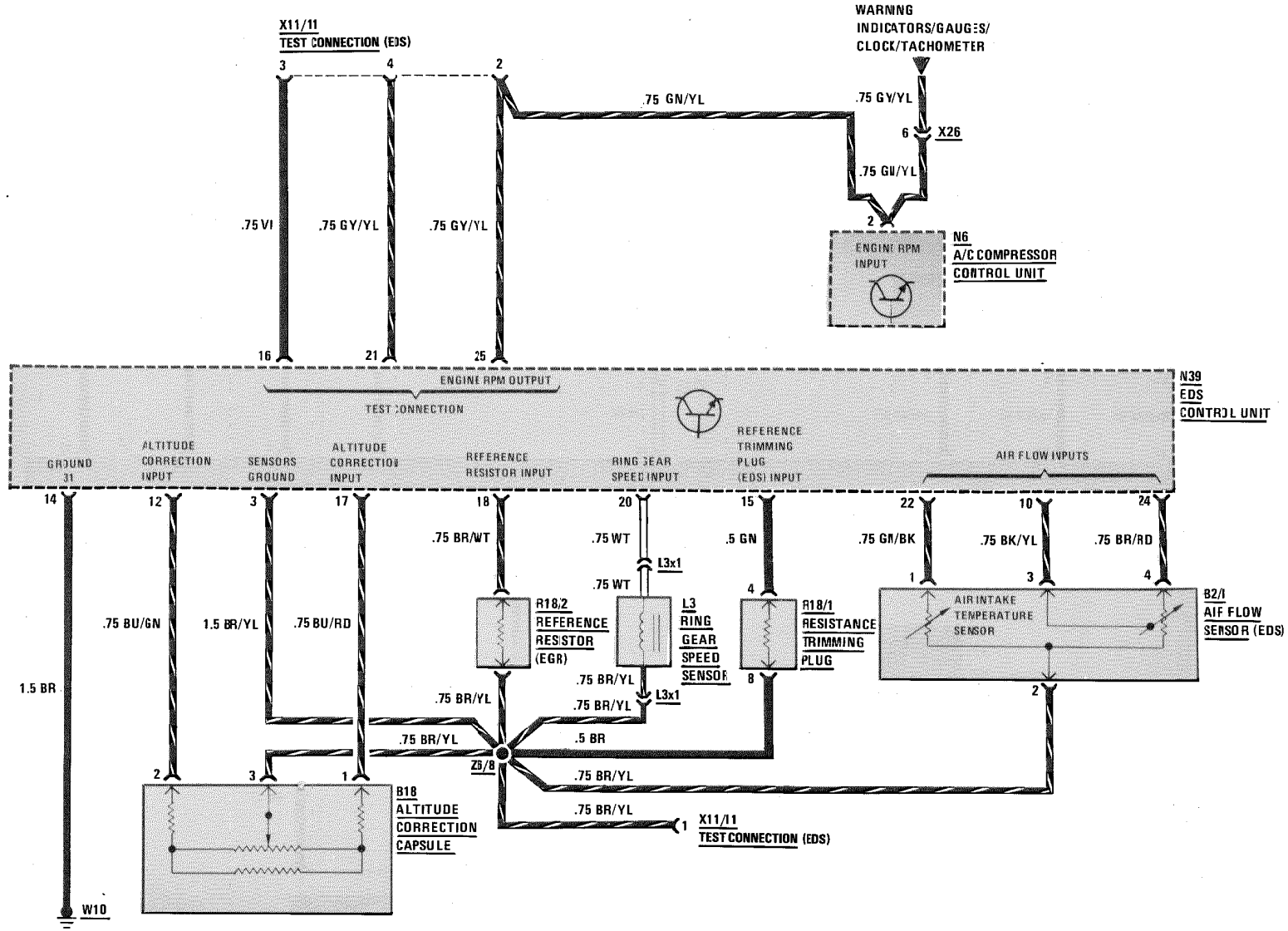

REVISIONS:

ELECTRONIC DIESEL SYSTEM

AS OF MY 1990

300D 2.5

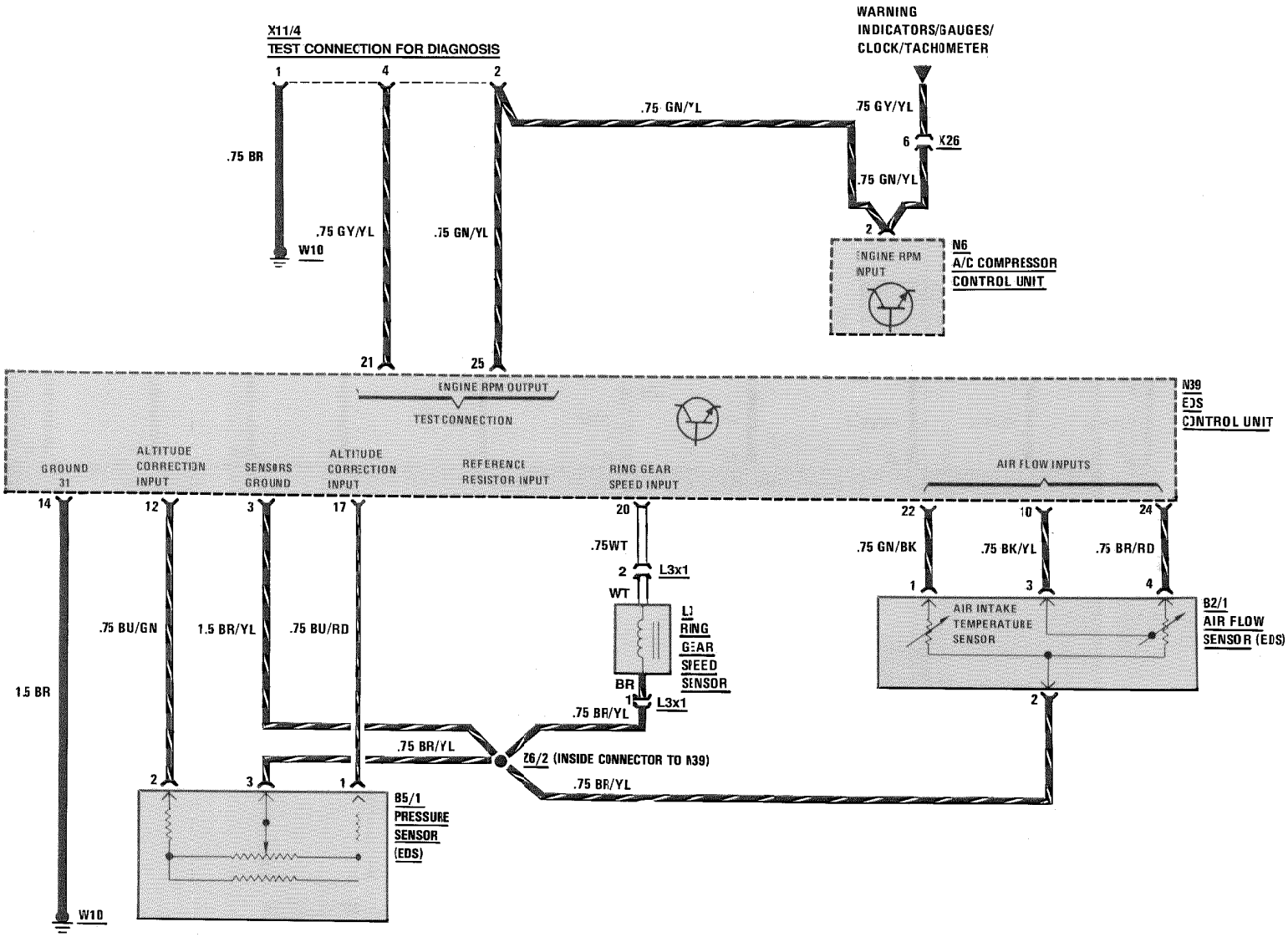

REVISIONS:

ELECTRONIC DIESEL SYSTEM

MY 1990-1991

300D 2.5

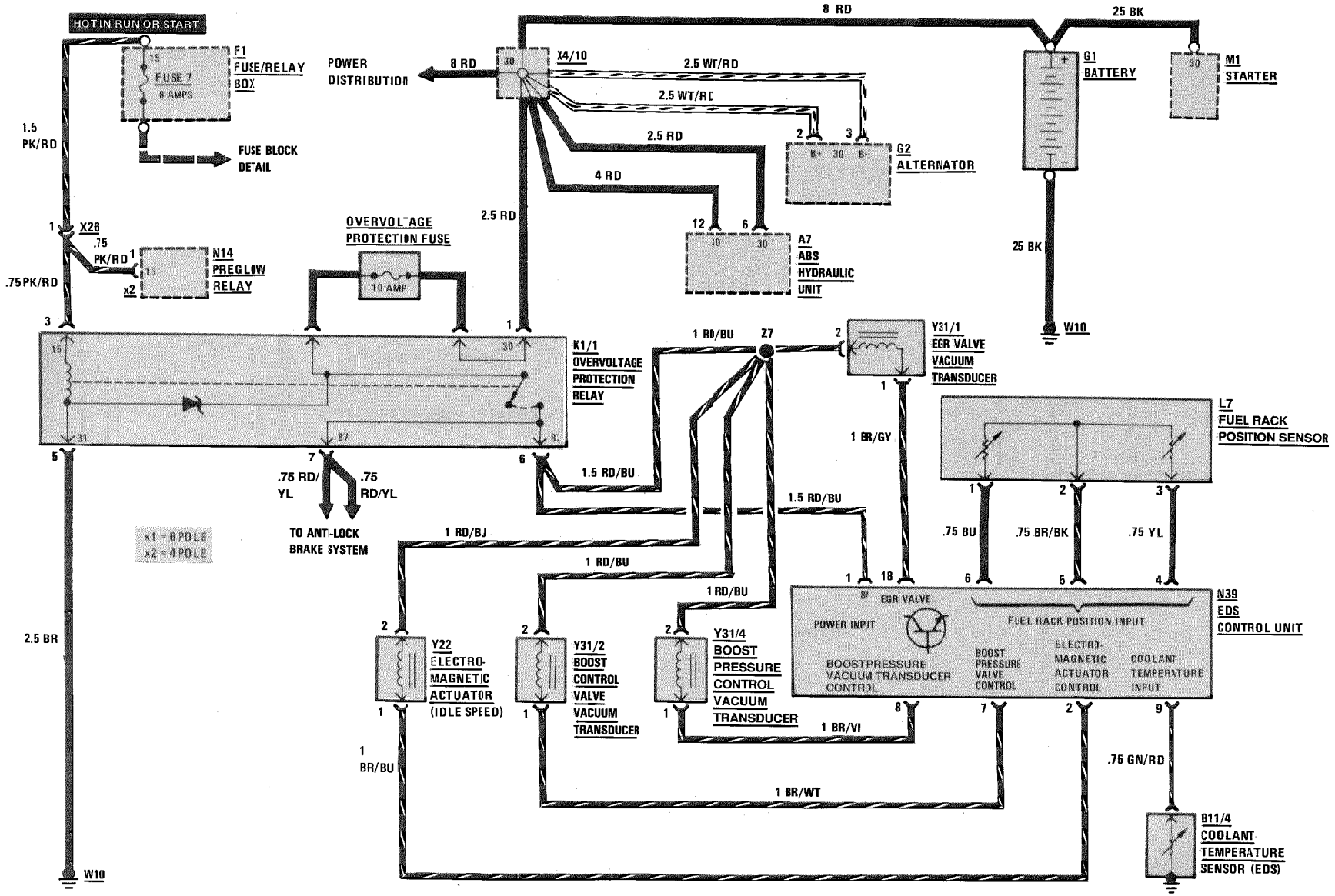

REVISIONS:

ELECTRONIC DIESEL SYSTEM

AS OF MY 1992

300D 2.5

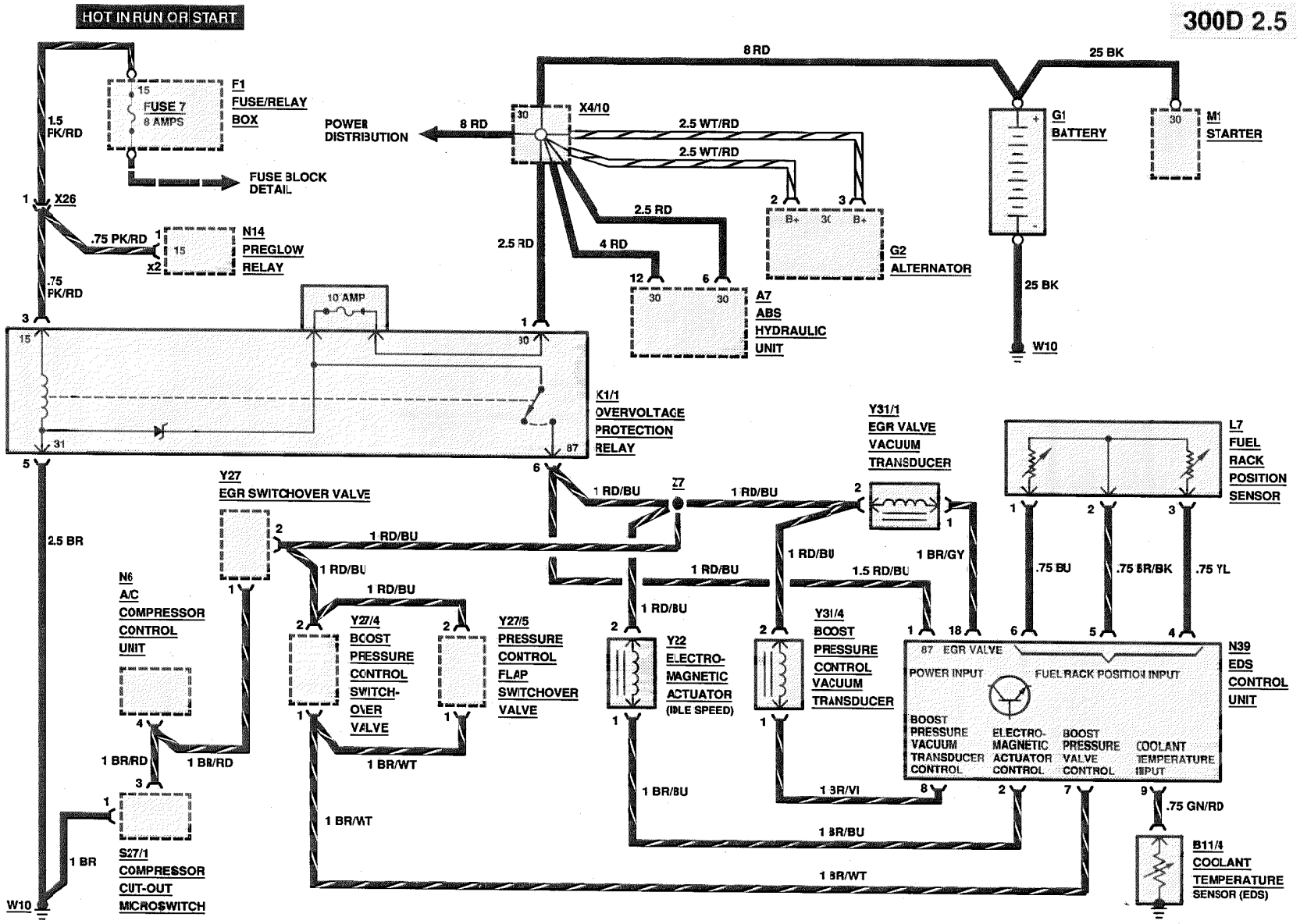

REVISIONS:

ELECTRONIC ENGINE CONTROLS/DIAGNOSTIC SOCKET

MY 1986/MY 1987
260 E/300 E

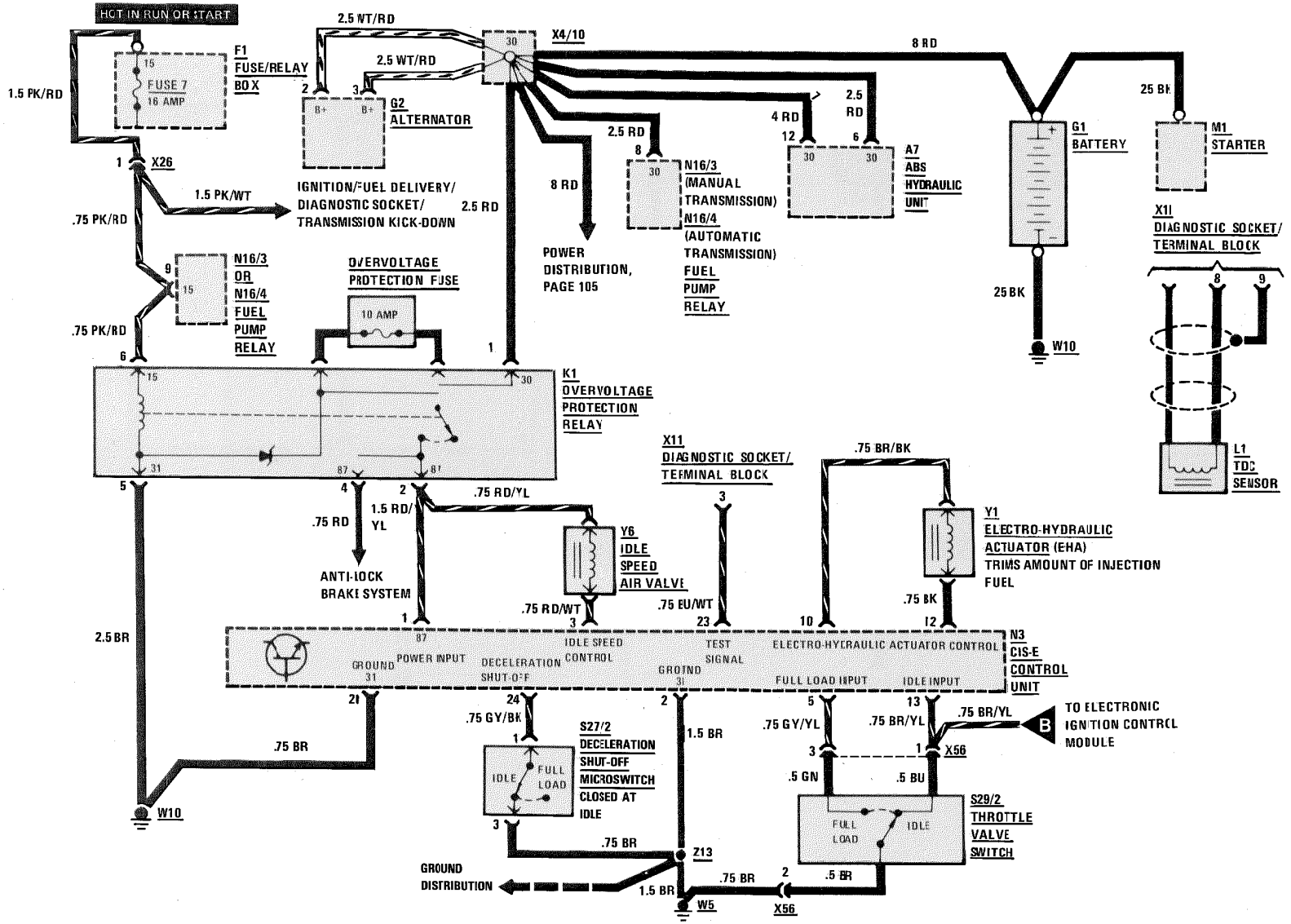

REVISIONS:

ELECTRONIC ENGINE CONTROLS

MY 1986/1987
260 E/300 E

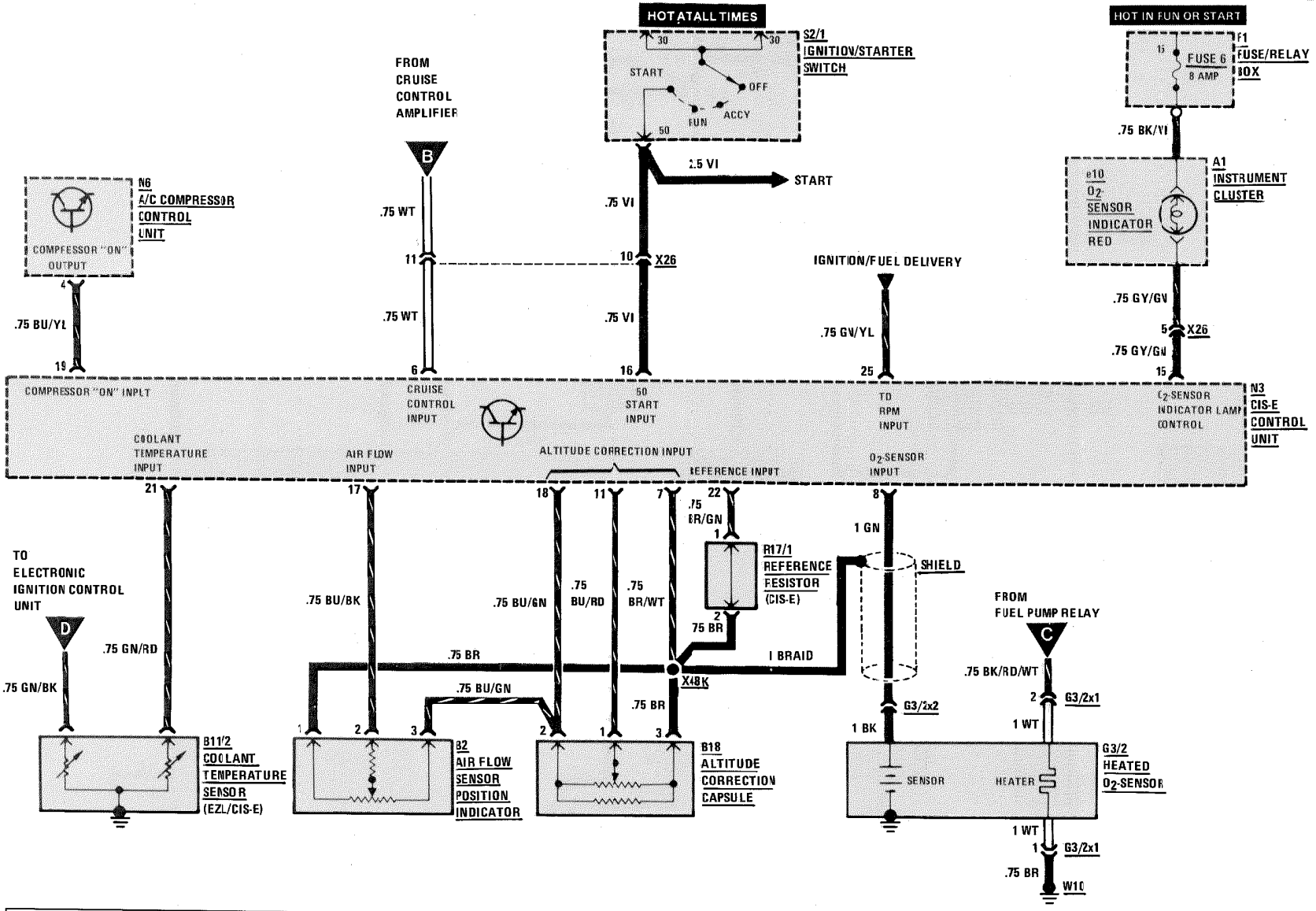

REVISIONS:

ELECTRONIC ENGINE CONTROLS/DIAGNOSTIC SOCKET

MY 1988-1989

GASOLINE/FEDERAL

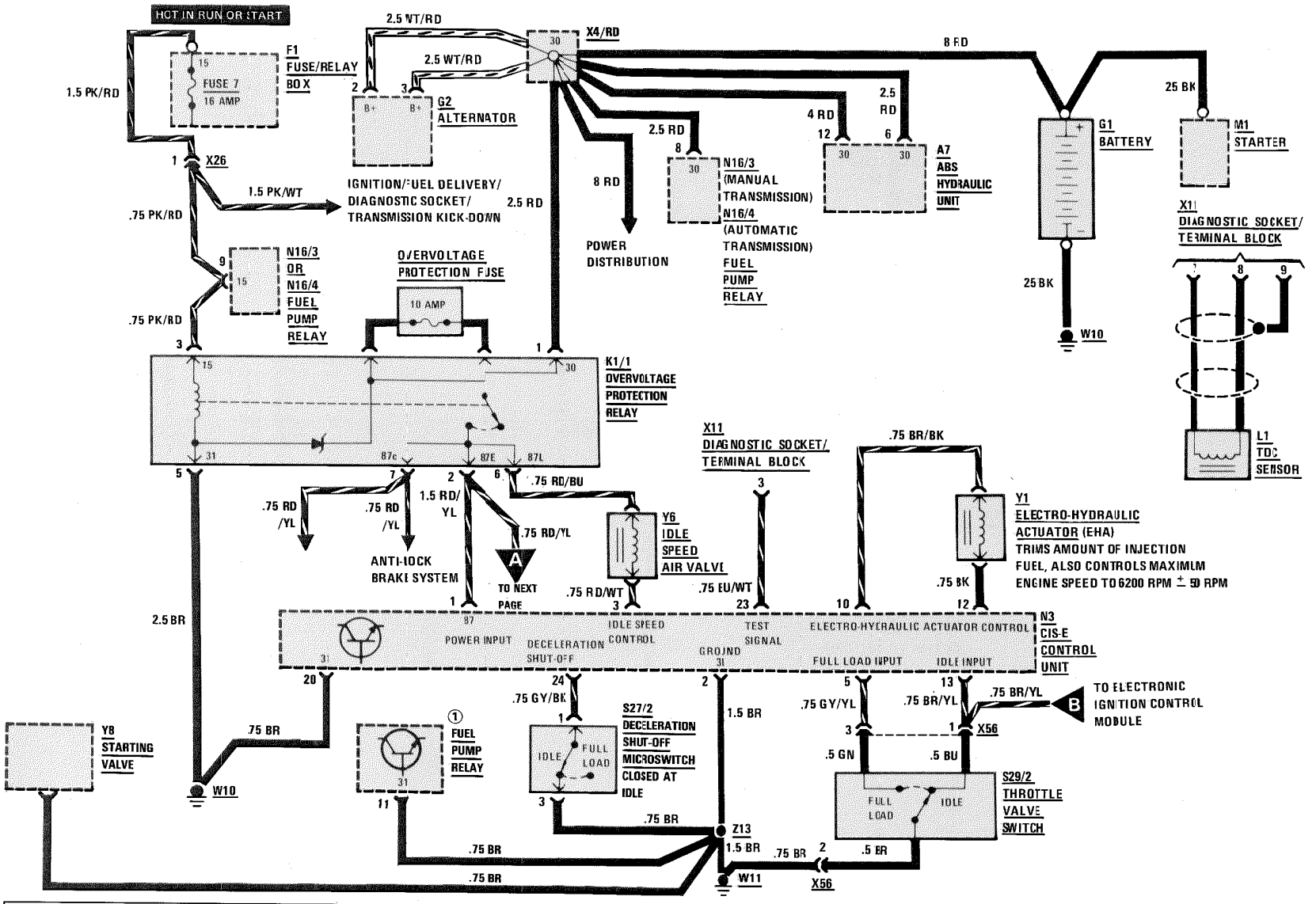

REVISIONS: ① N16/3 (MANUAL TRANSMISSION)
N16/4 (AUTOMATIC TRANSMISSION)

ELECTRONIC ENGINE CONTROLS

MY 1988-1989

GASOLINE/FEDERAL

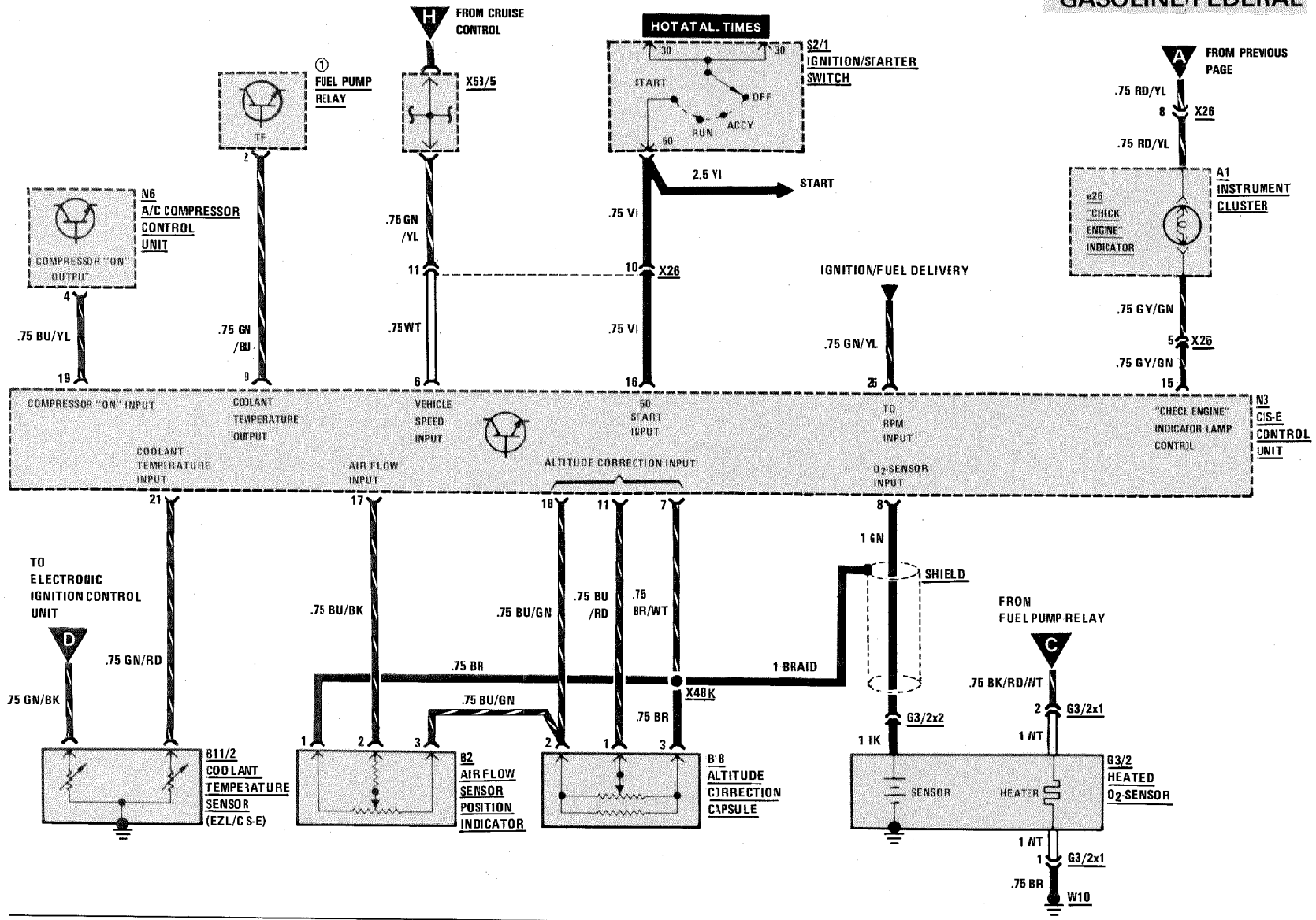

REVISIONS: ① N16/3 (MANUAL TRANSMISSION)
N16/4 (AUTOMATIC TRANSMISSION)

ELECTRONIC ENGINE CONTROLS/DIAGNOSTIC SOCKET

MY 1988-1989

GASOLINE/CALIFORNIA

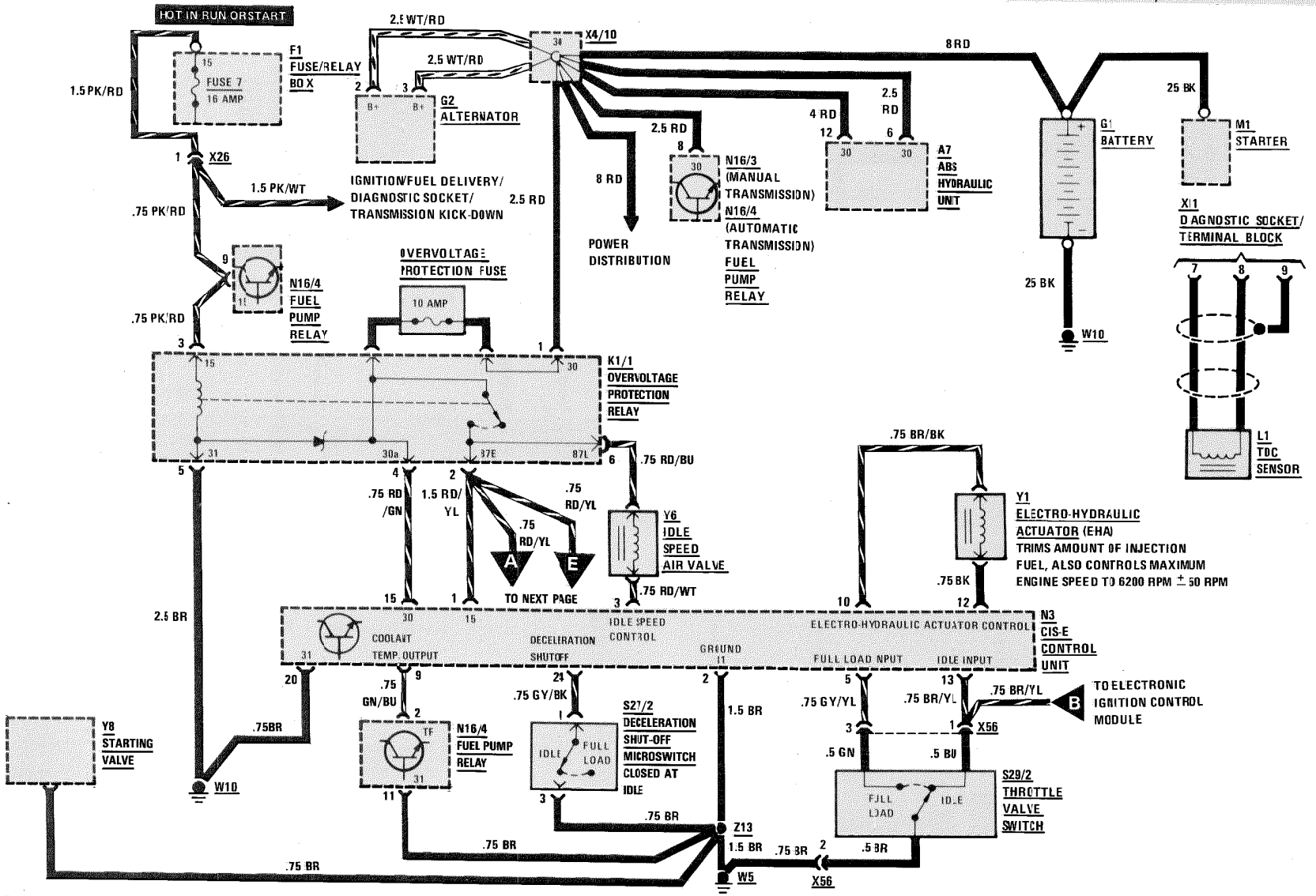

REVISIONS:

ELECTRONIC ENGINE CONTROLS

MY 1988-1989
GASOLINE/CALIFORNIA

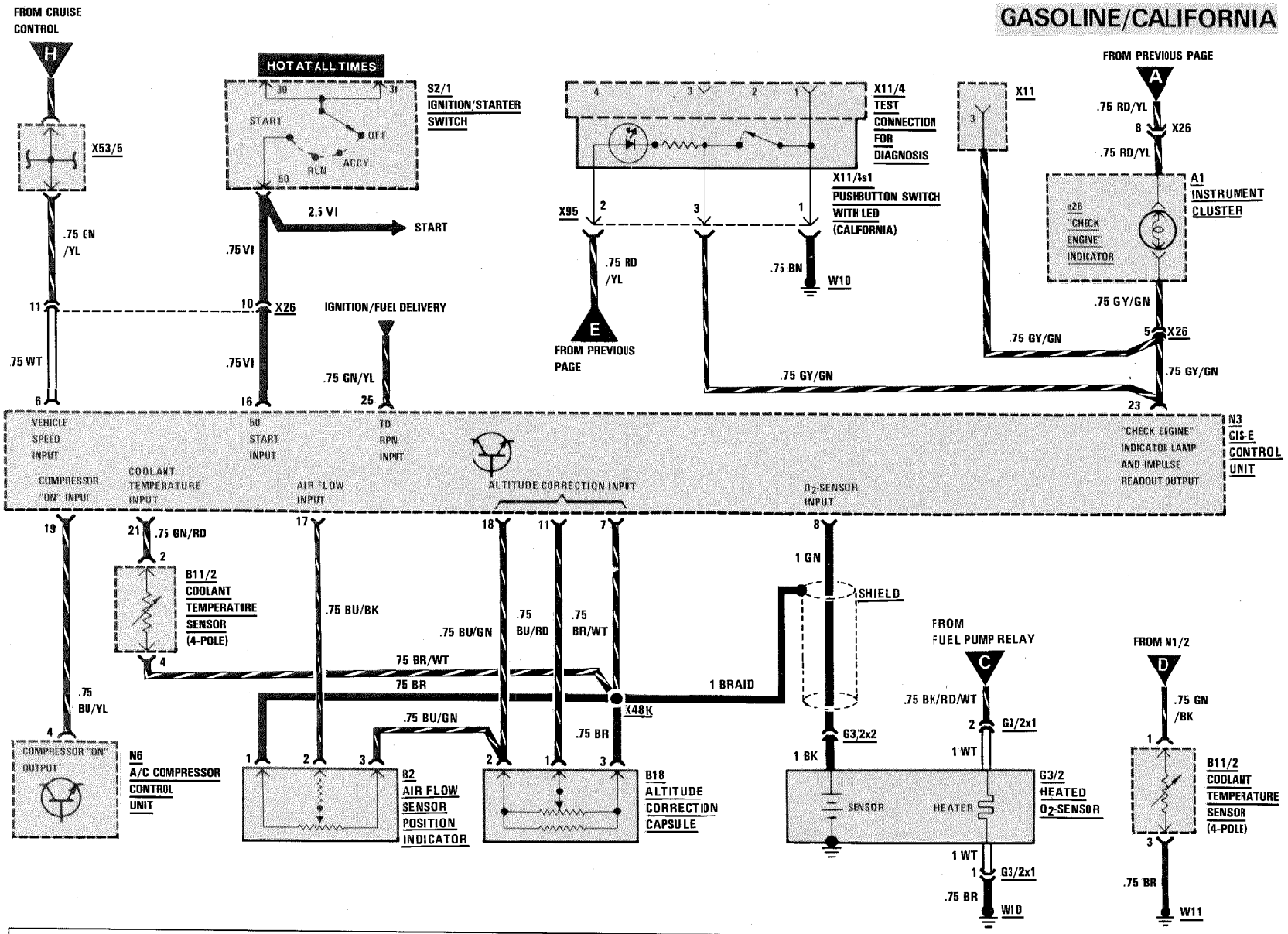

REVISIONS:

AS OF MY 1990
M103 GASOLINE

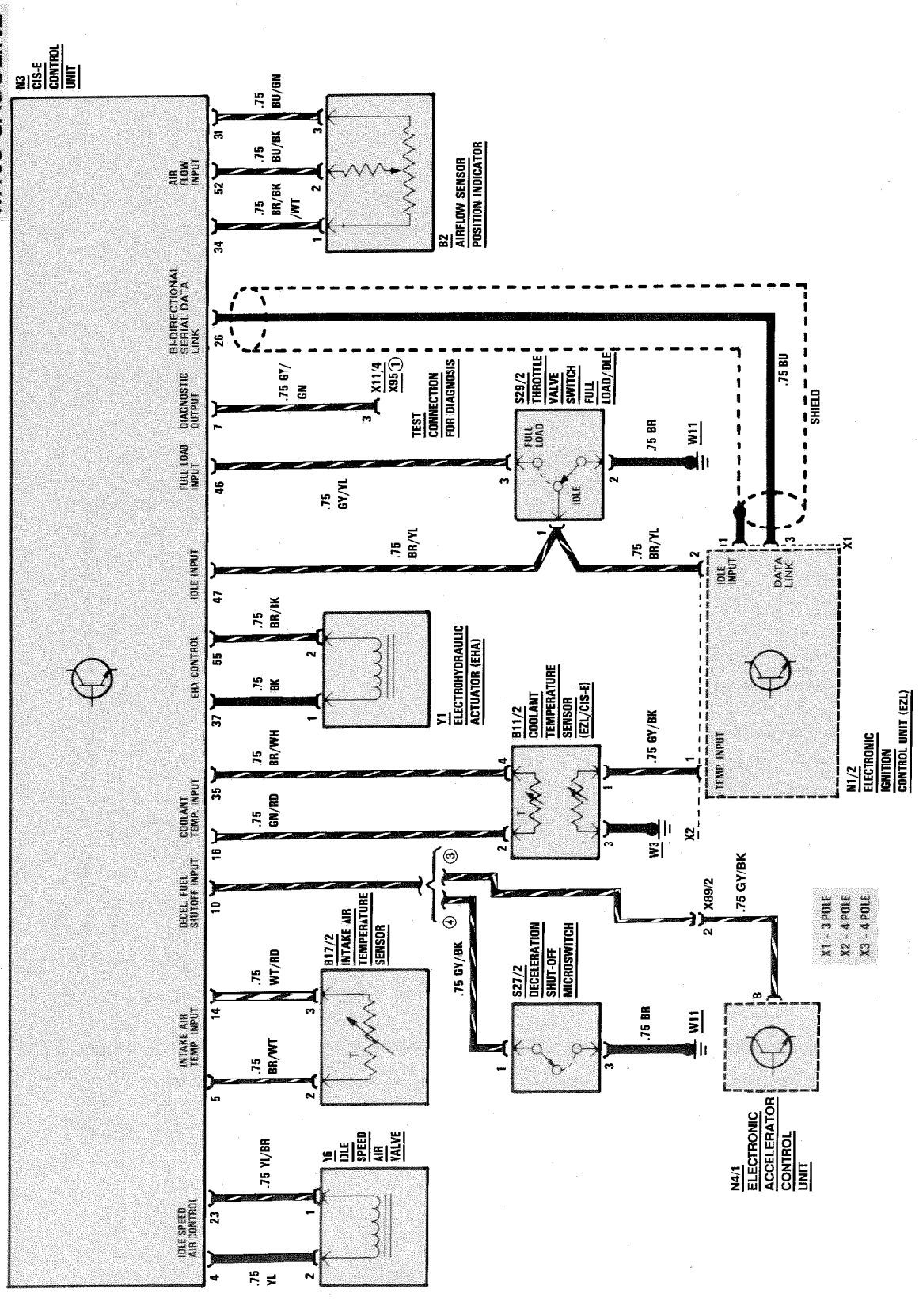

REVISIONS:
① CALIFORNIA ONLY
② NOT WITH MANUAL TRANSMISSON
③ WITH ASR
④ WITHOUT ASR

ELECTRONIC ENGINE CONTROLS

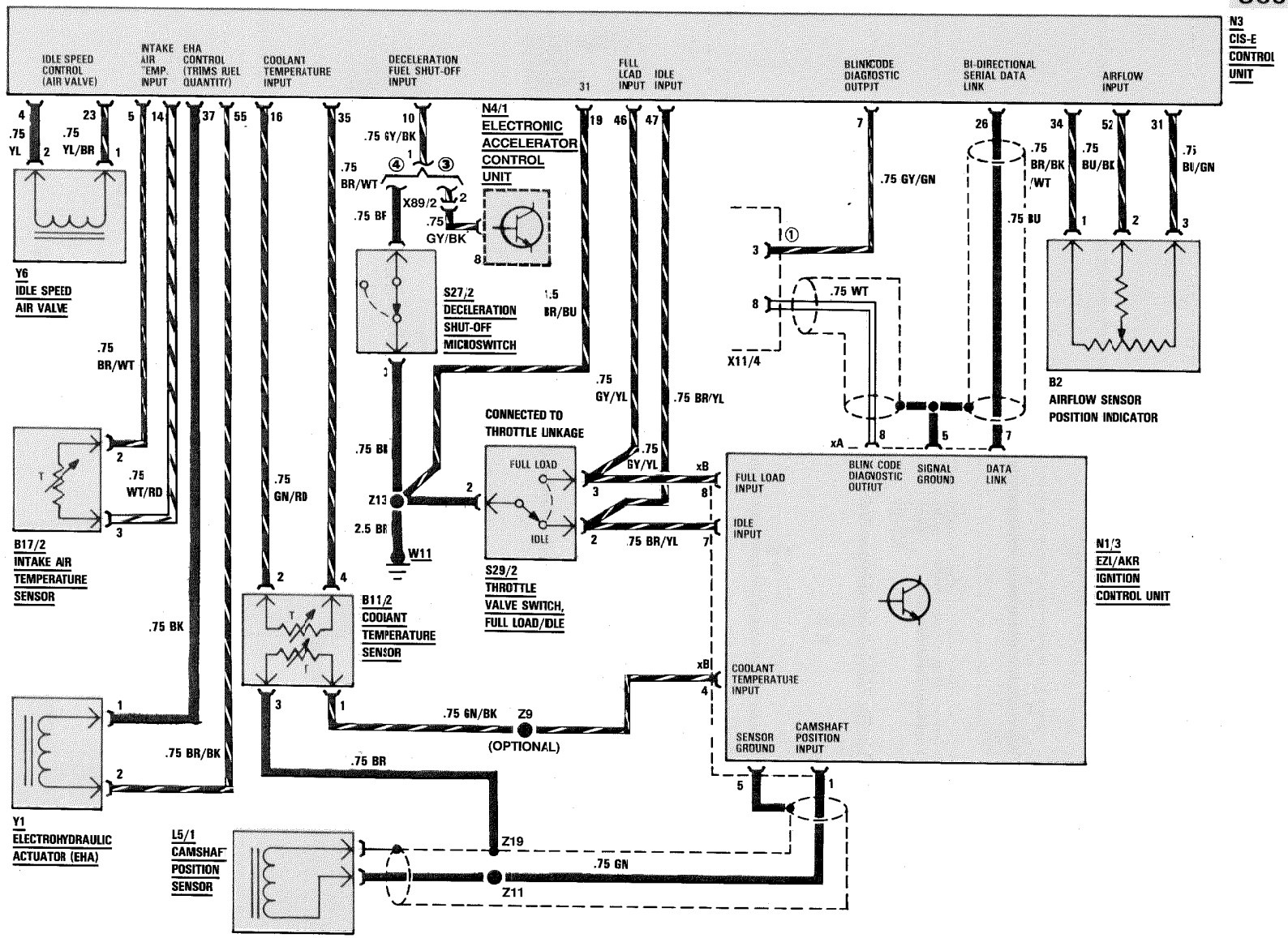

REVISIONS:
① IN CALIFORNIA, X95
② AS OF MY 1992, CONNECTED DIRECTLY TO W11
③ VEHICLES WITH ASR
④ VEHICLES W/O ASR

ELECTRONIC ENGINE CONTROLS/TRANSMISSION SHIFT POINT RELAY

MY 1990-1991

GASOLINE

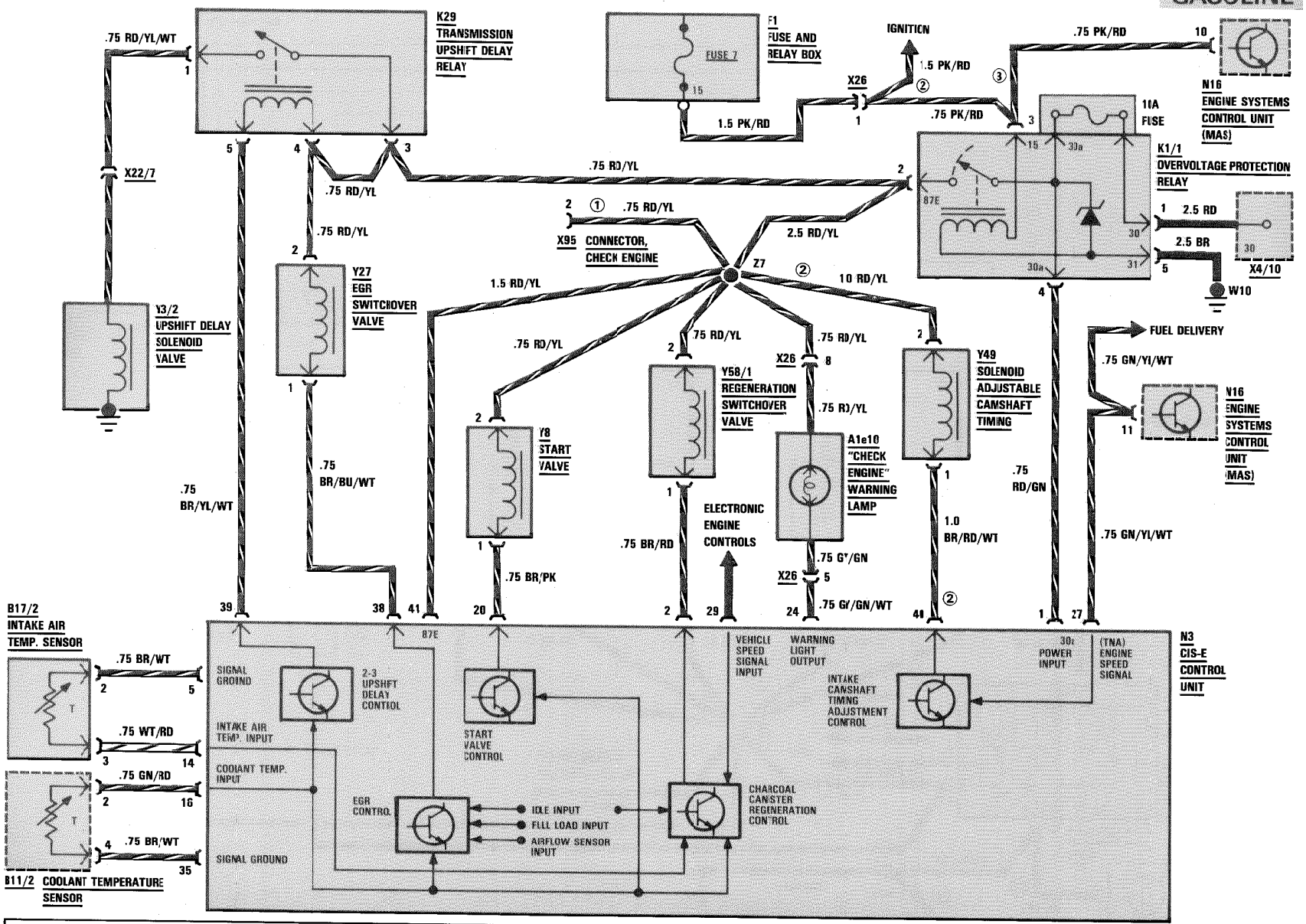

REVISIONS: ① ONLY IN CALIF. VEHICLES
② ONLY USED IN 300CE (M104)
③ NOT USED ON VEHICLES WITH ASR

ELECTRONIC ENGINE CONTROLS/TRANSMISSION SHIFT POINT DELAY AS OF MY 1992

GASOLINE

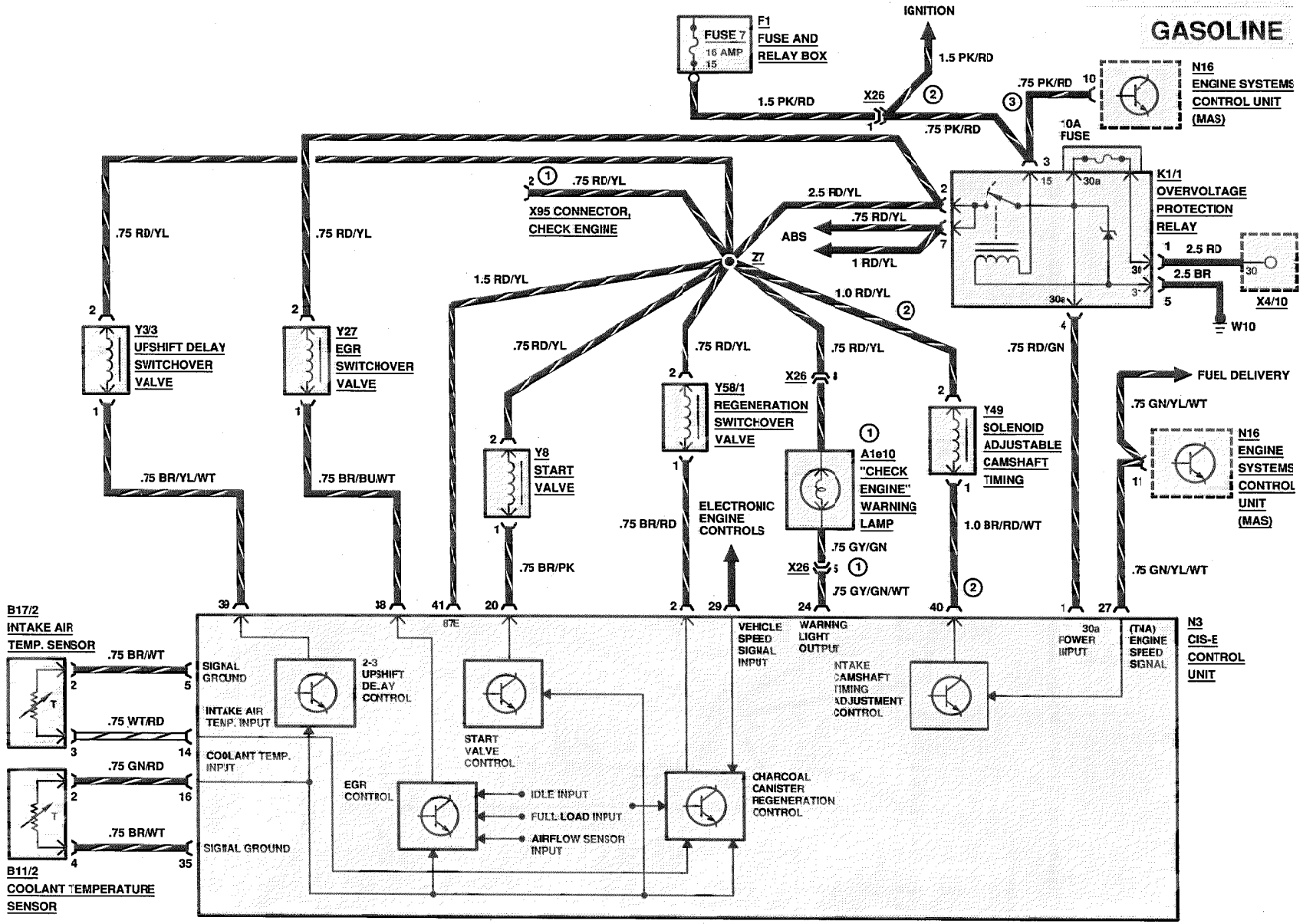

REVISIONS:

(1) ONLY IN CALIF. VEHICLES
(2) ONLY USED IN MODEL 300CE (M104)
(3) NOT USED ON VEHICLES WITH ASR

ELECTRONIC ENGINE CONTROLS

AS OF MY 1990
GASOLINE

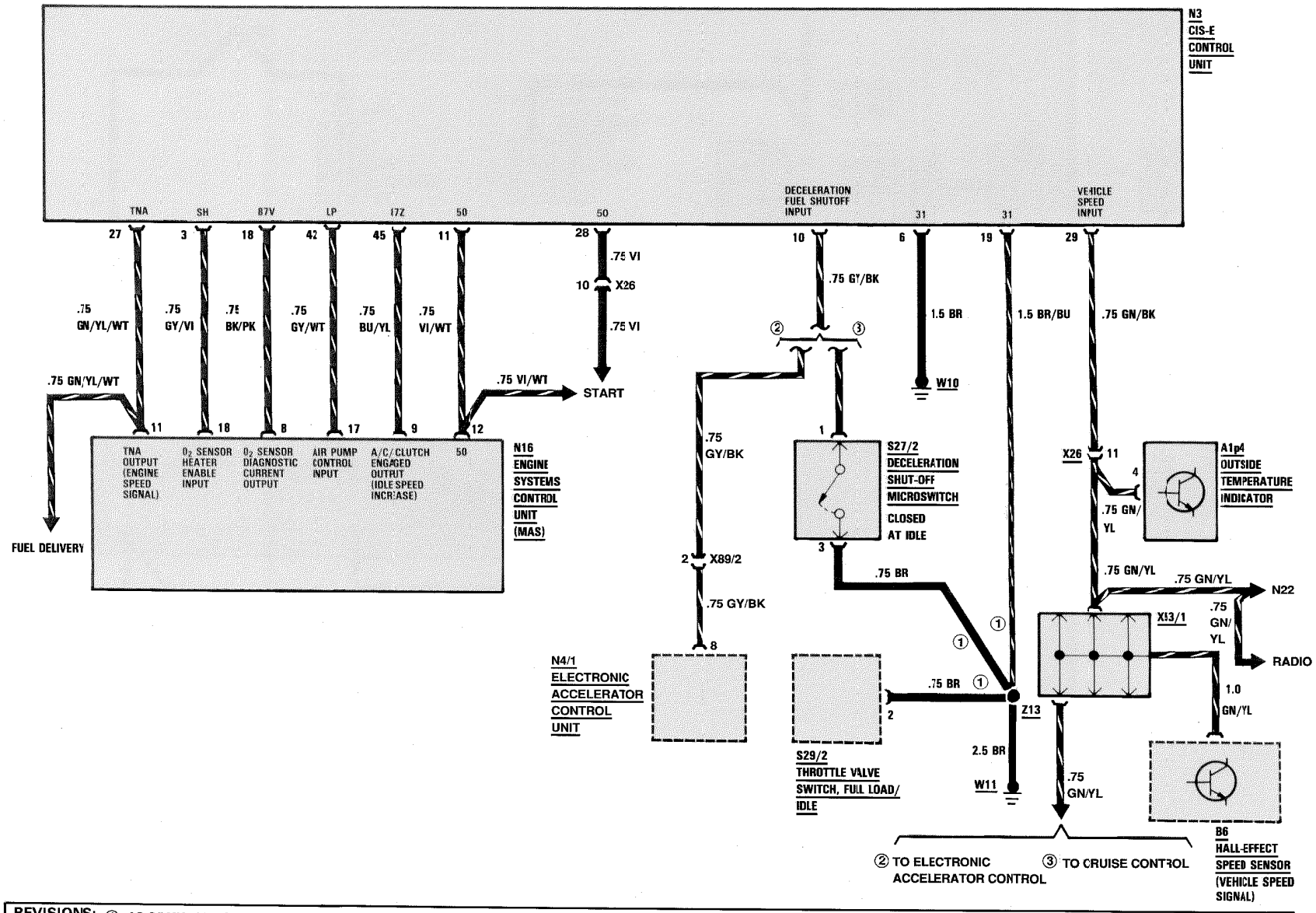

REVISIONS:
① AS OF MY 1992, CONNECTED DIRECTLY TO W11
② VEHICLES WITH ASR
③ VEHICLES W/O ASR

AUXILIARY FAN/ENGINE OVERLOAD PROTECTION

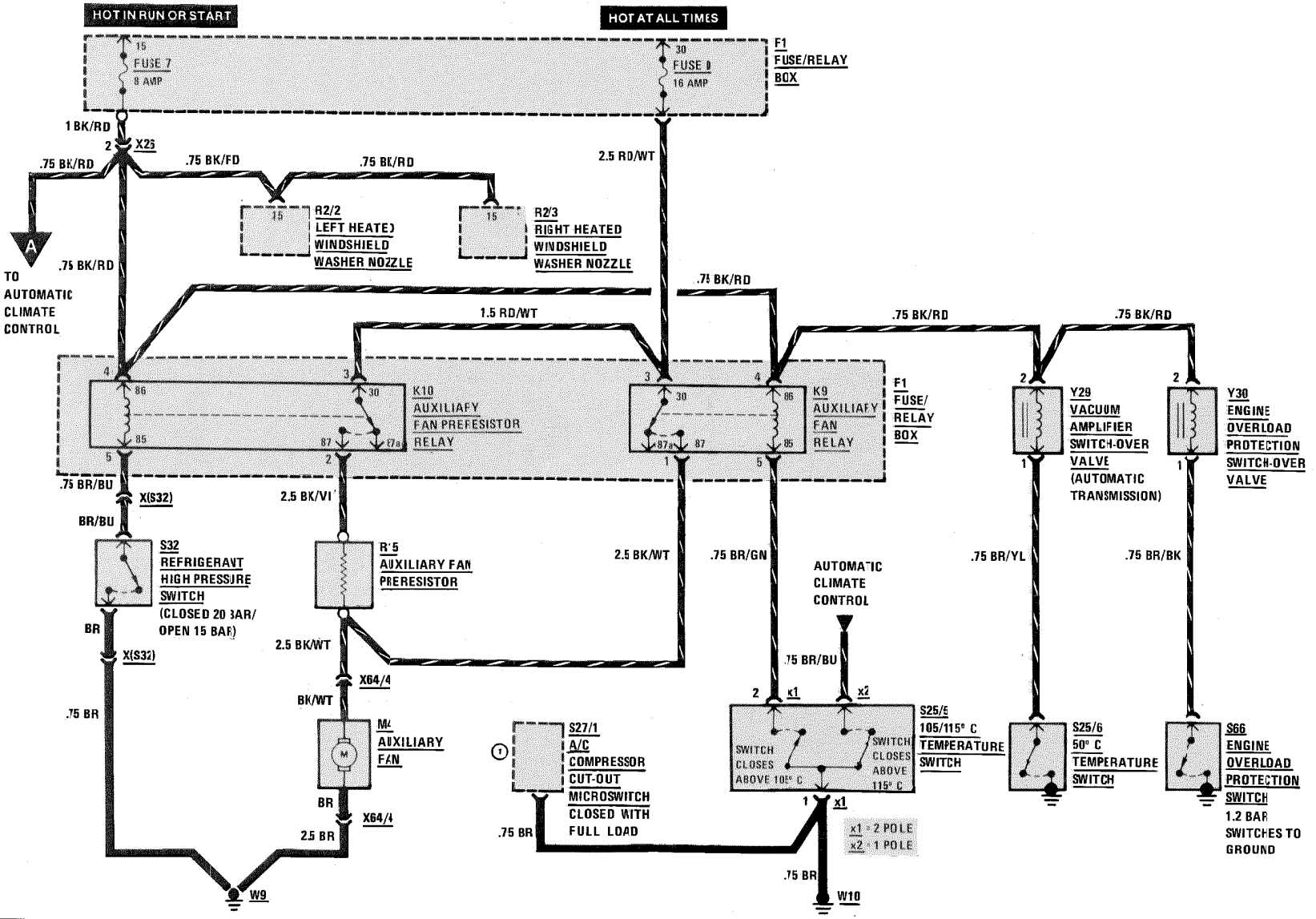

REVISIONS: ① MODEL YEAR 1986 ONLY

AUXILIARY FAN/ENGINE OVERLOAD PROTECTION

MY 1990-1991

DIESEL

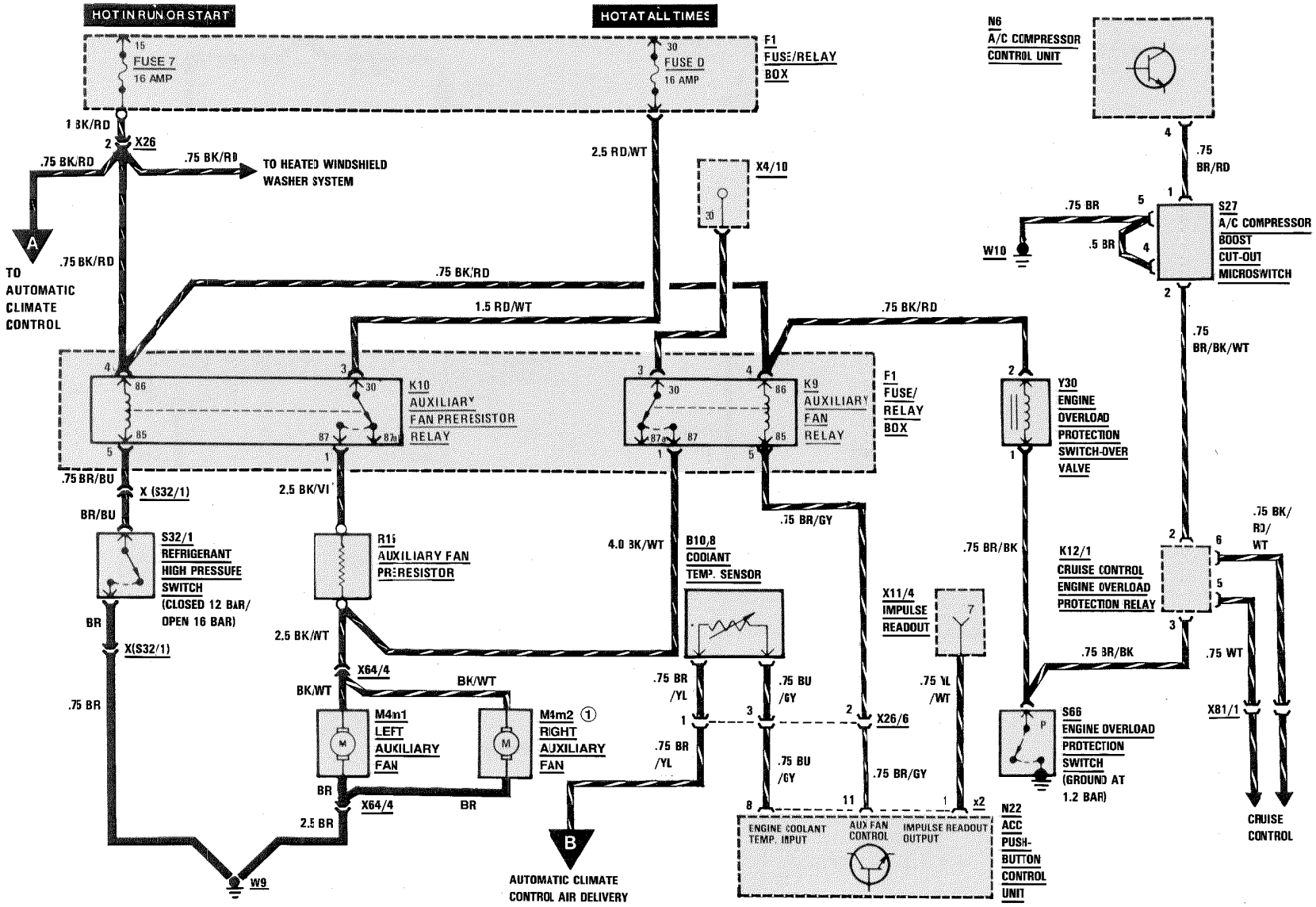

REVISIONS: ① AS OF MY 1991

AUXILIARY FAN/ENGINE OVERLOAD PROTECTION

AS OF MY 1992

DIESEL

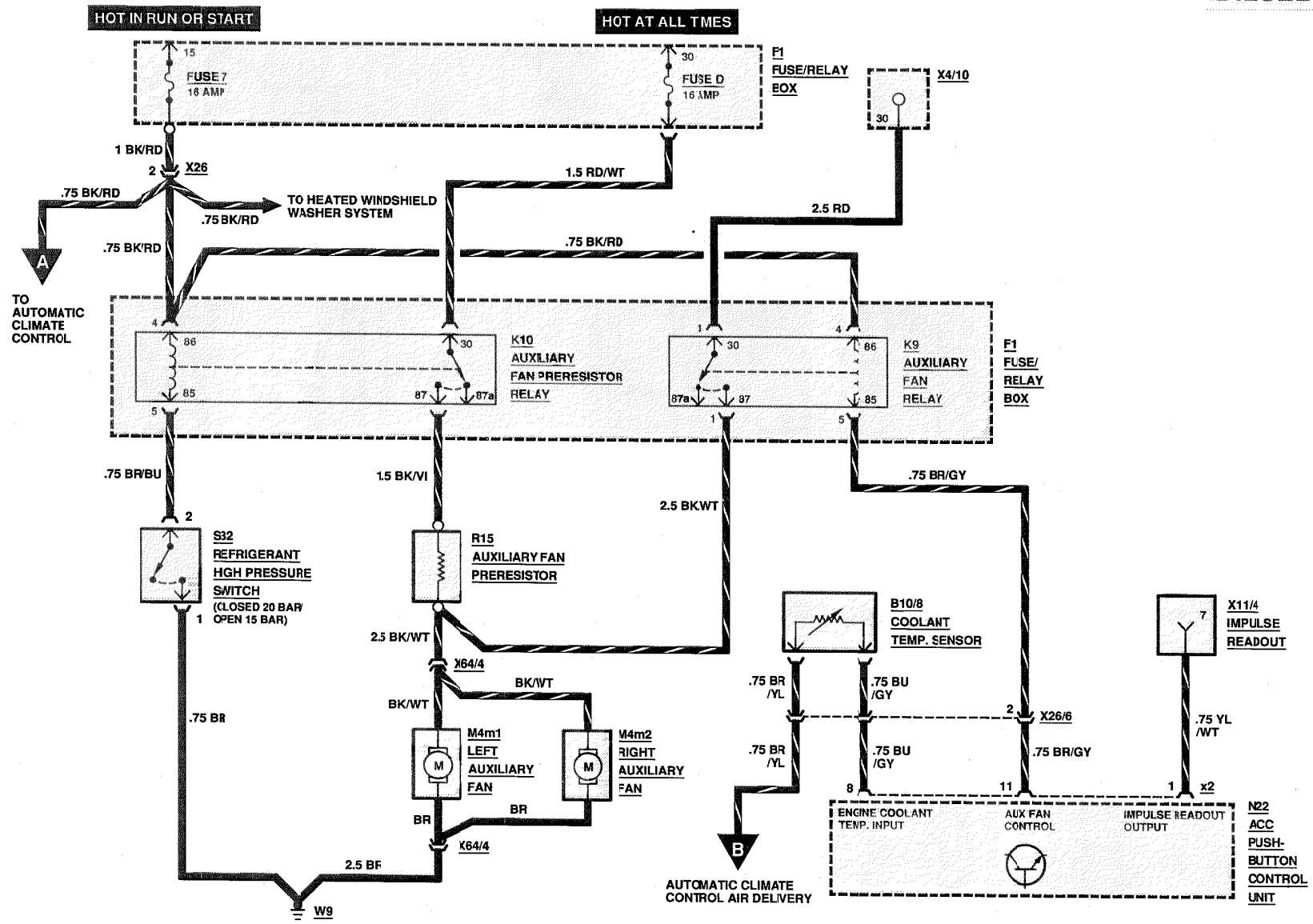

REVISIONS:

AUXILIARY FAN

MY 1986-1989
GASOLINE

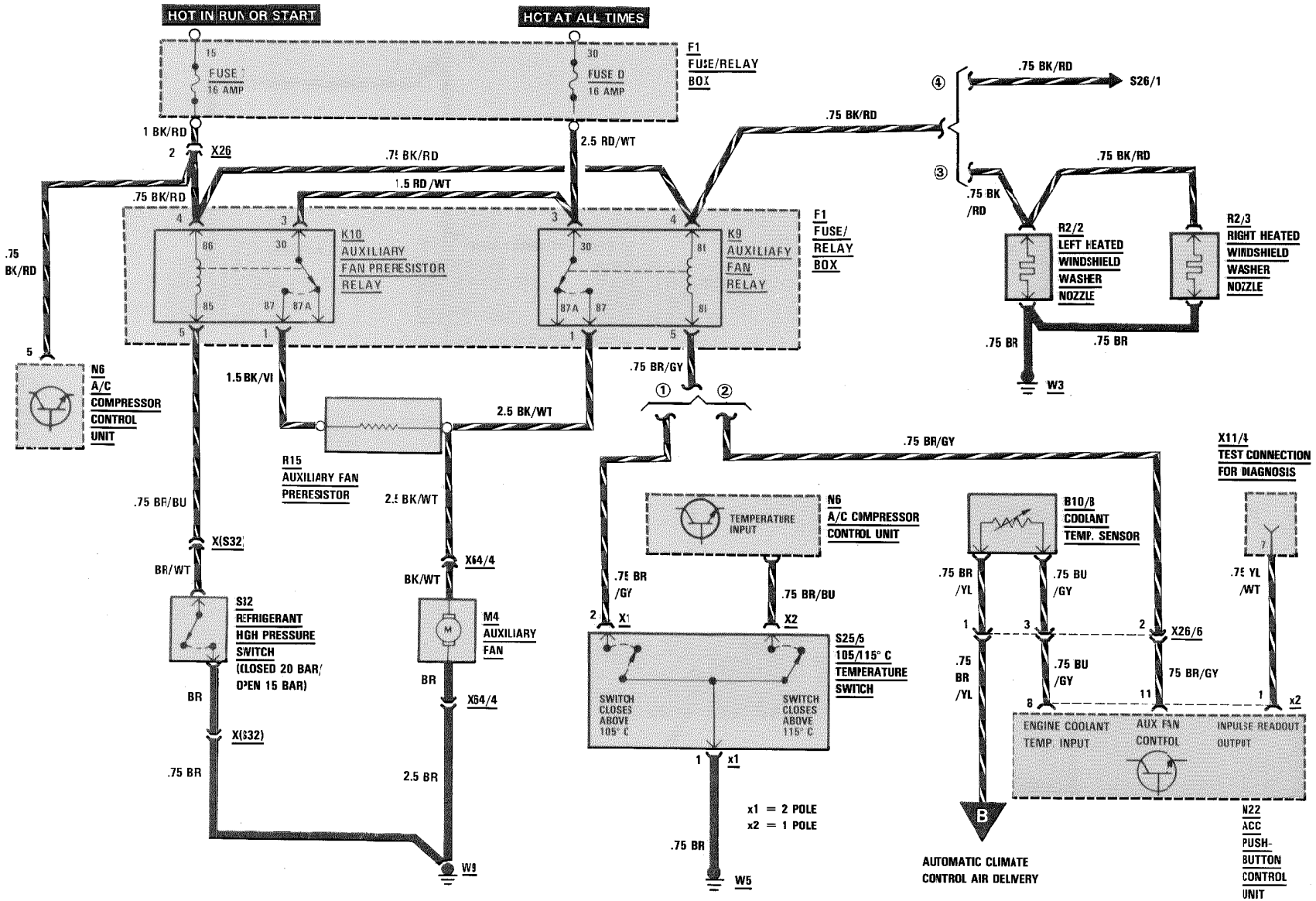

REVISIONS:
① MY 1985 AND MY 1987 ONLY
② AS OF MY 1988
③ MY 1985-1988
④ AS OF MY 1989

AUXILIARY FAN

AS OF MY 1990
GASOLINE

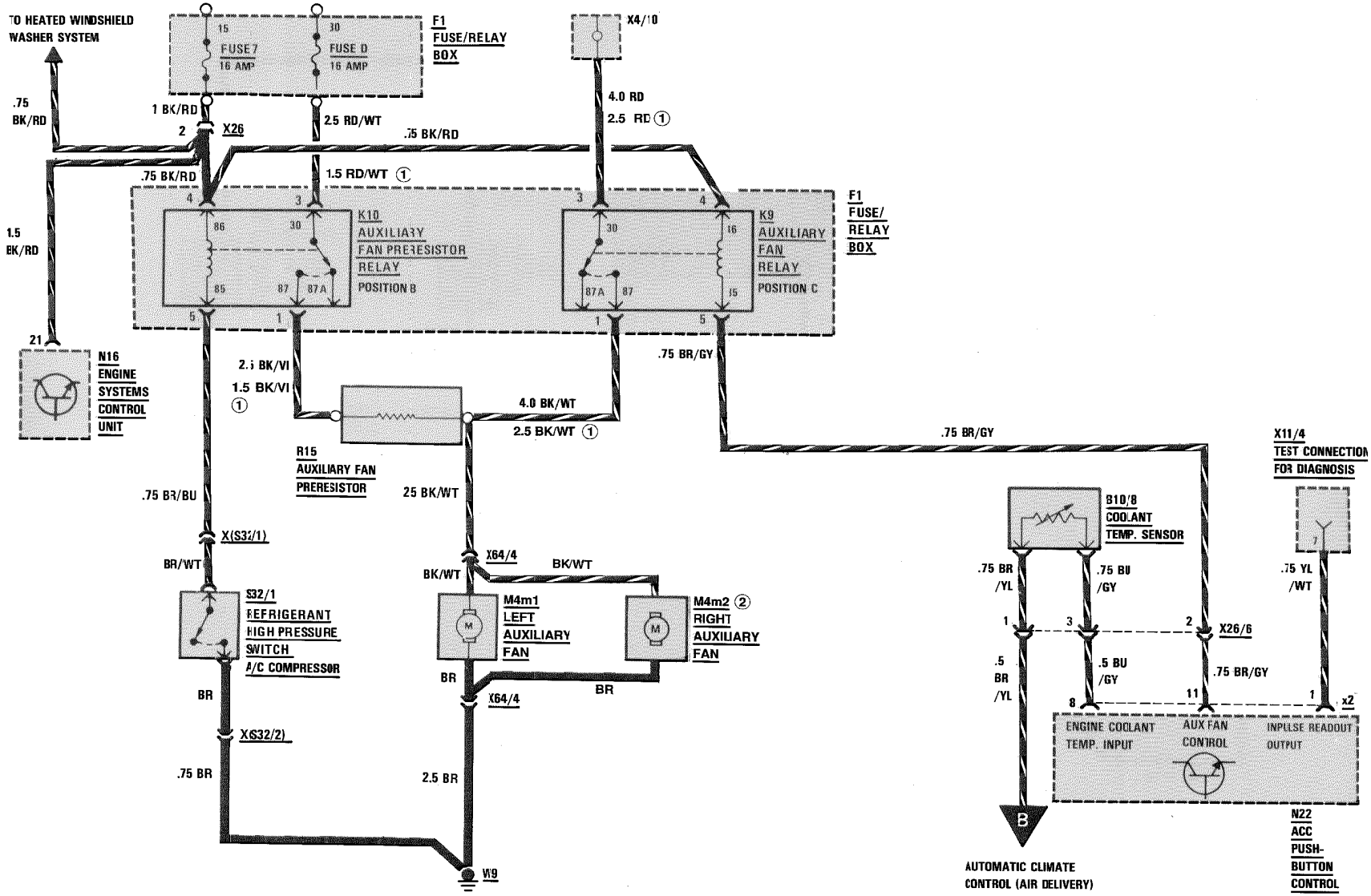

REVISIONS: ① ONLY ON VEHICLES WITH ASR
② AS OF MY 1991

AUXILIARY FAN

AS OF MY 1992
400E/500E

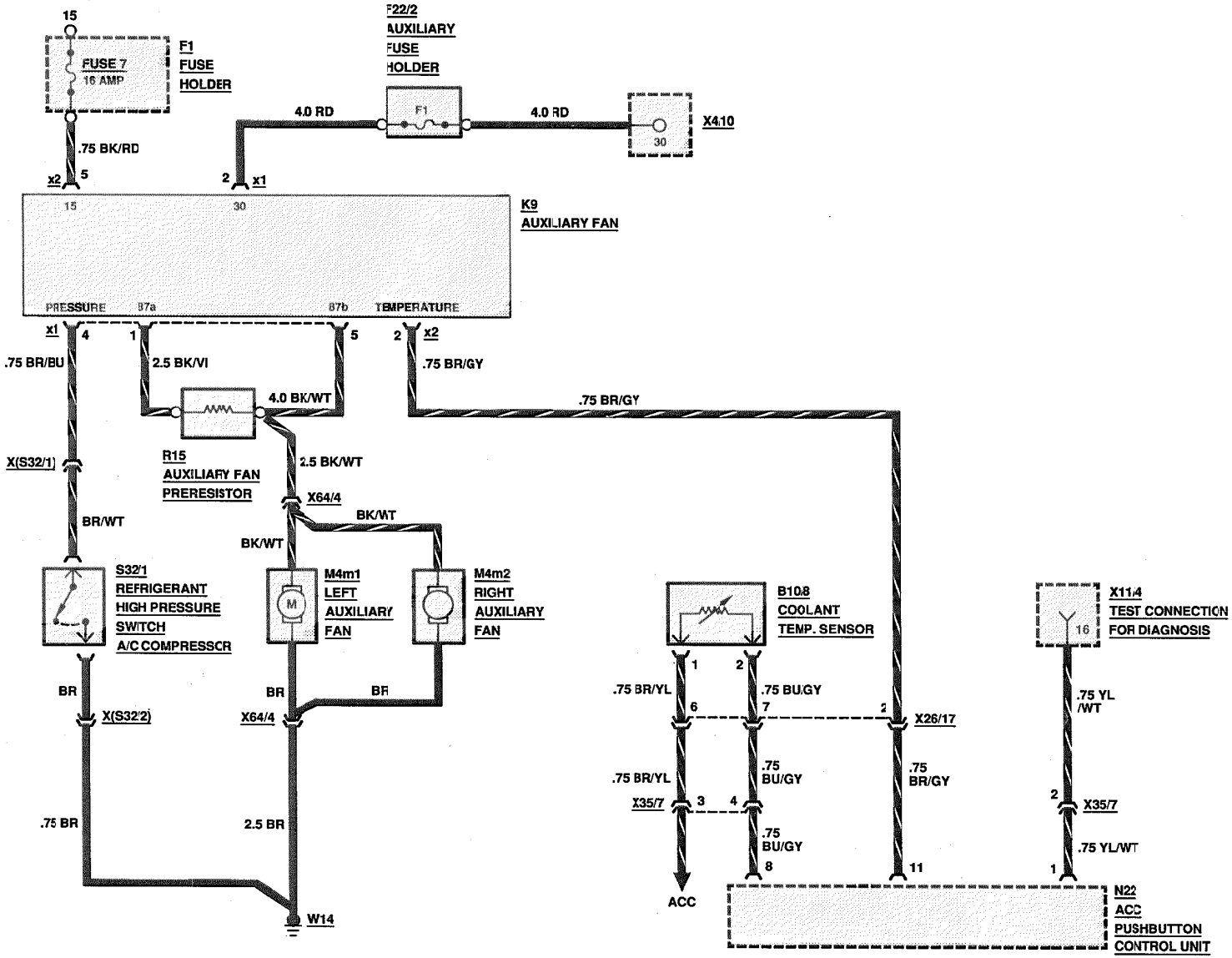

REVISIONS:

CONTROLLER AREA NETWORK (CAN) DATA BUS

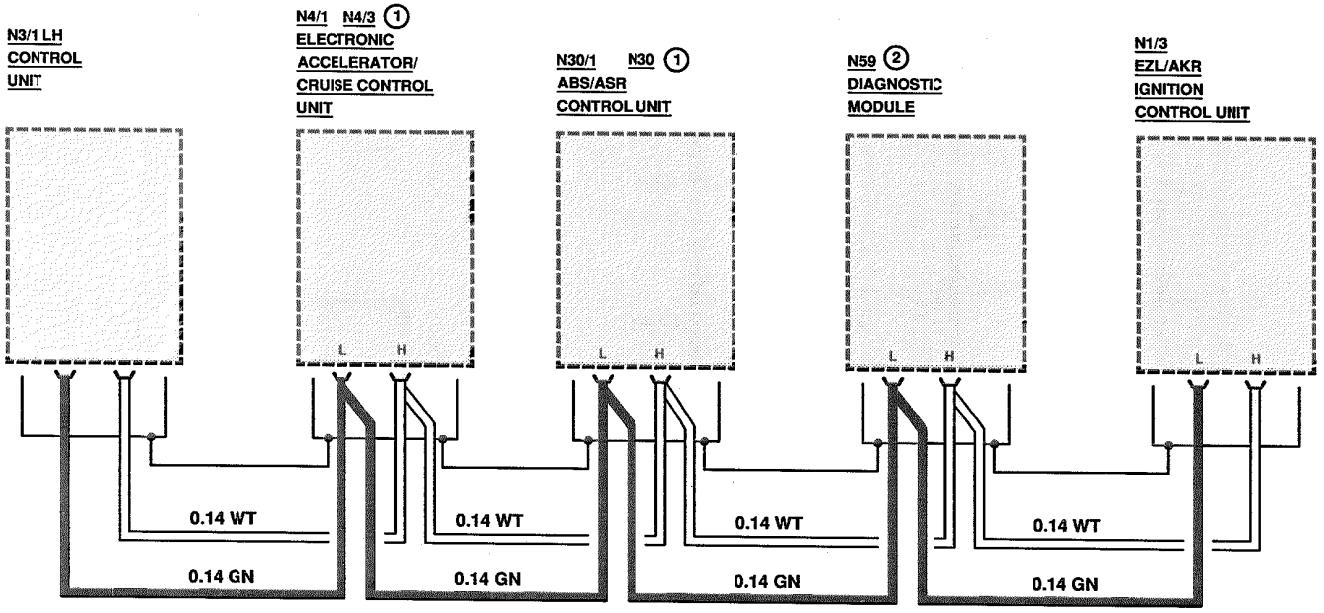

REVISIONS: (1) W/C ASR
(2) CALIFORNIA VERSION

CHARGING SYSTEM

MY 1986-1989

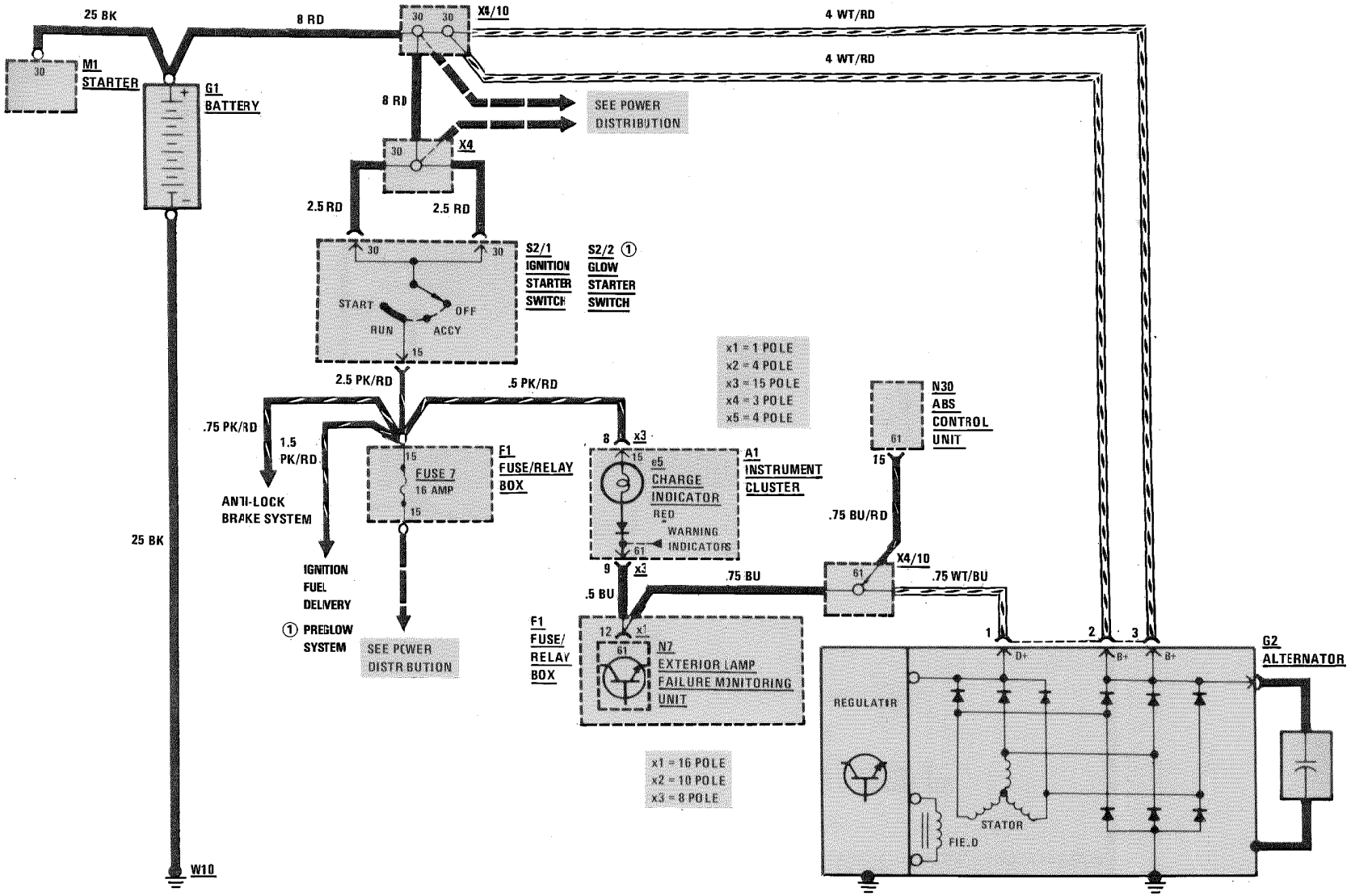

REVISIONS: ① DIESEL MODELS

CHARGING SYSTEM

AS OF MY 1990

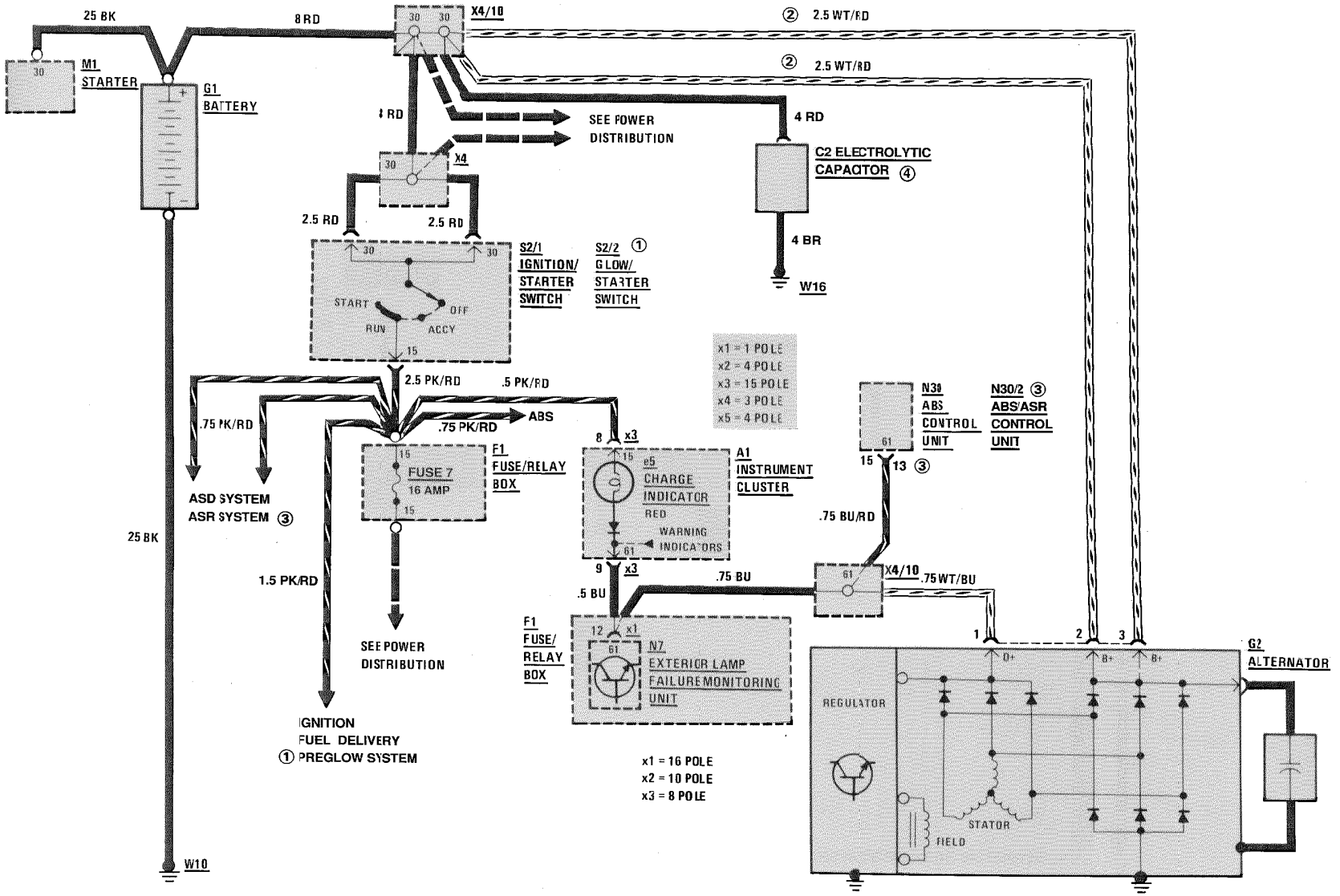

REVISIONS:
① DIESEL MODELS
② ON GASOLINE MODELS, A SINGLE 8 WT/RD WIRE GOES TO G2
③ VEHICLES WITH ASR
④ MODELS 400E/500E

HEADLAMPS/FOG LAMPS

AS OF MY 1986

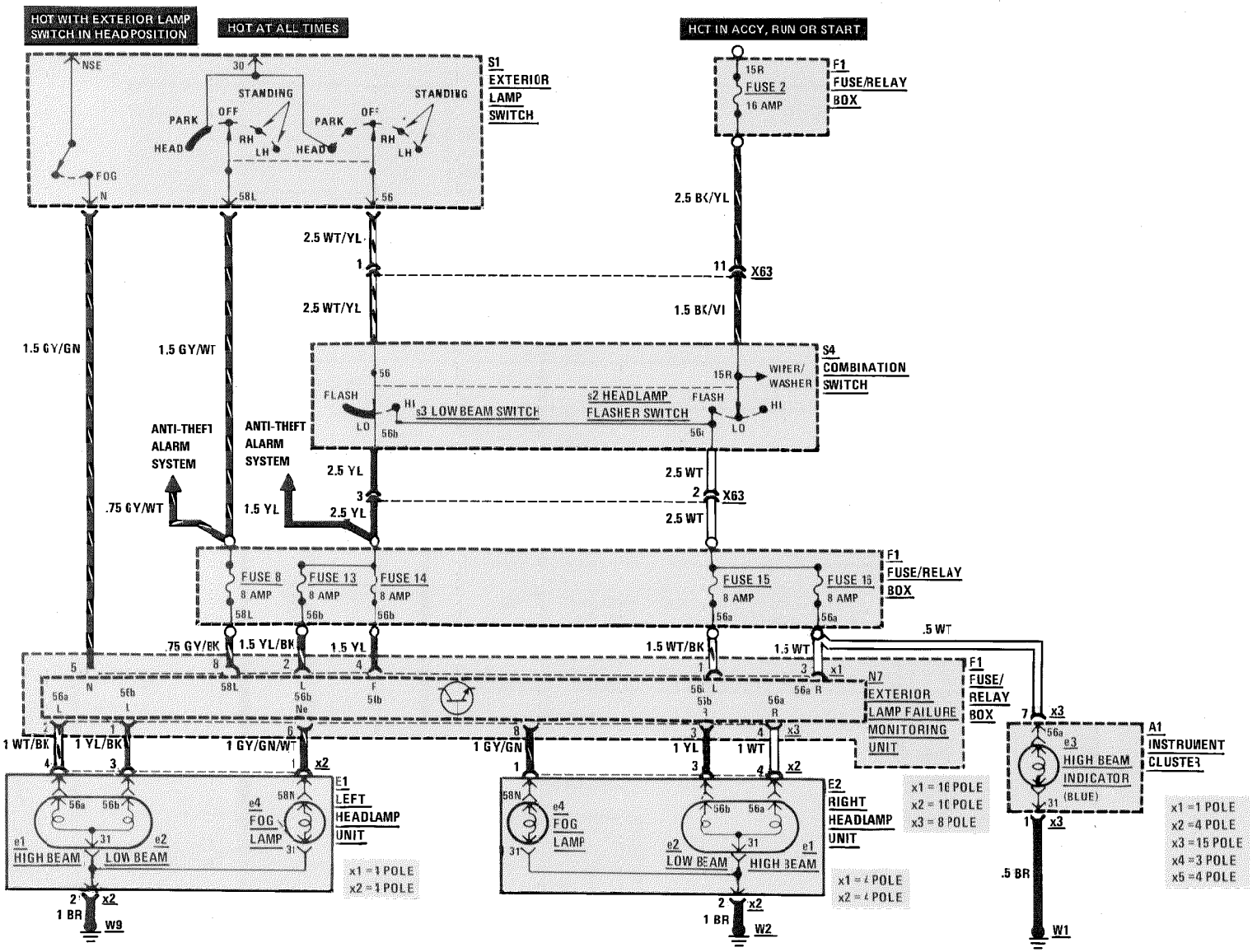

REVISIONS:

HEADLAMPS/FOG LAMPS

AS OF MY 1991

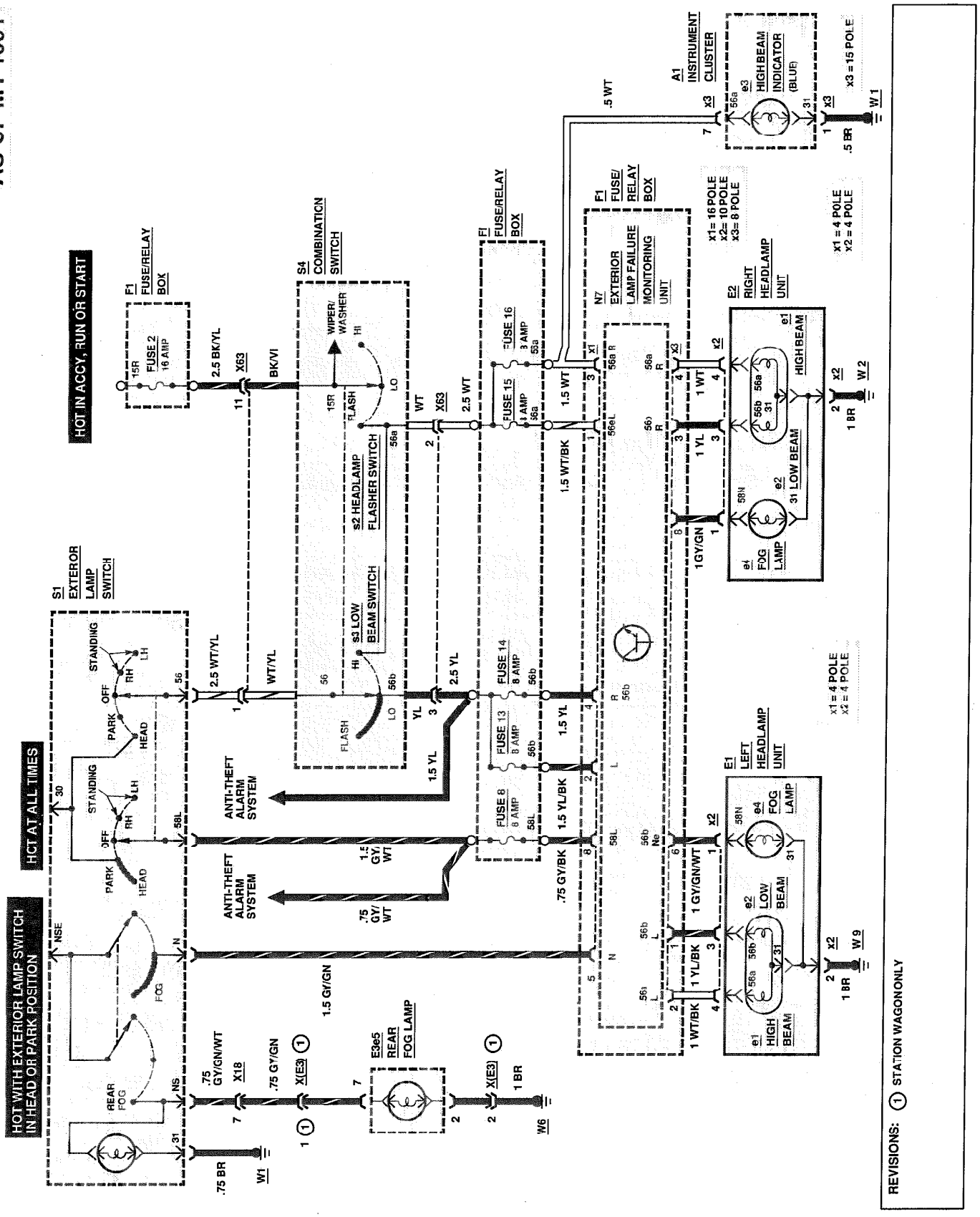

STOP LAMPS/BACKUP LAMPS

AS OF MY 1986

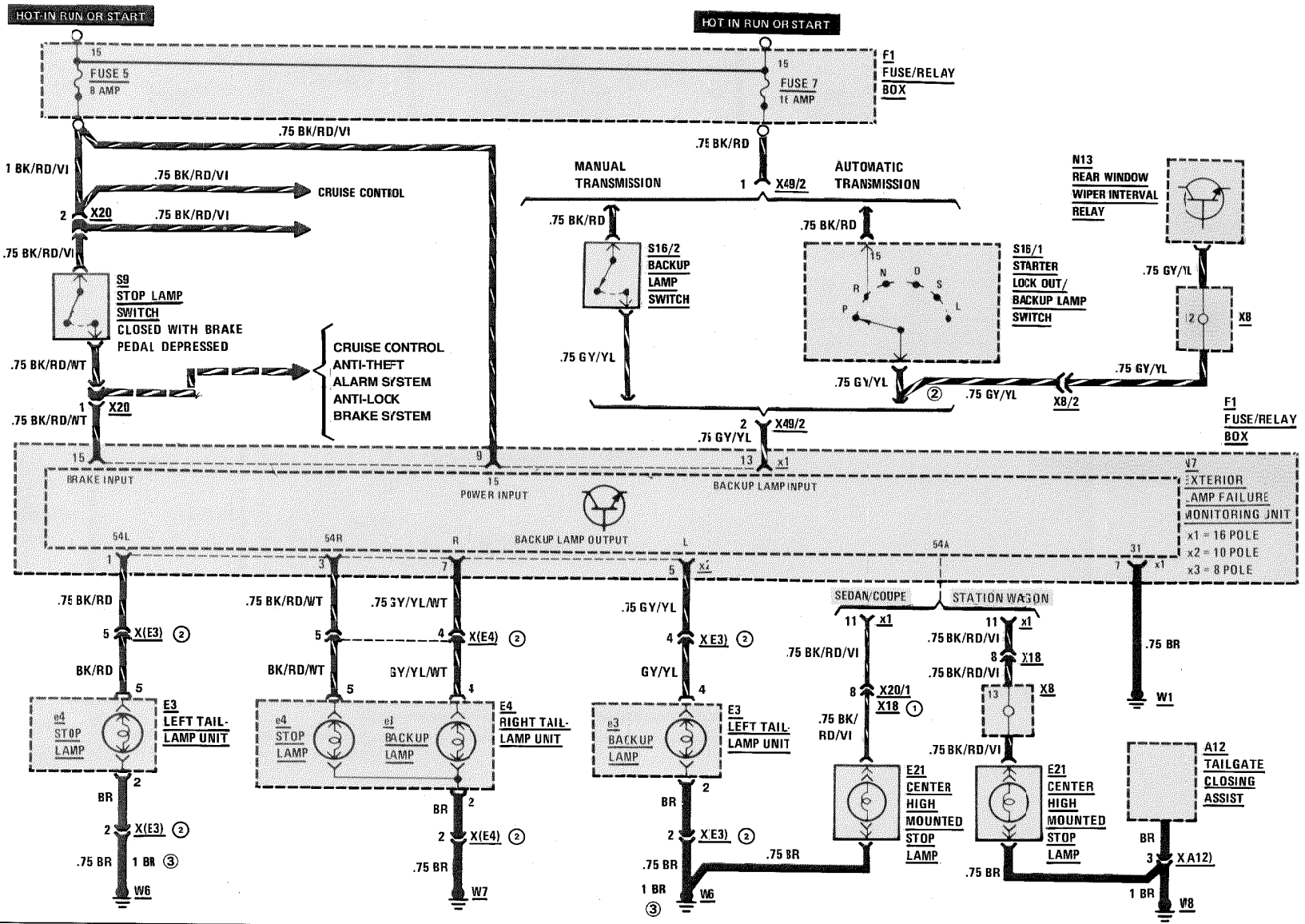

REVISIONS: ① AS OF MODEL YEAR 1987
② STATION WAGON ONLY
③ AS OF MODEL YEAR 1990

LAMPS: PARK/TAIL/SIDE MARKER/LICENSE

AS OF MY 1986
(EXCEPT STATION WAGON)

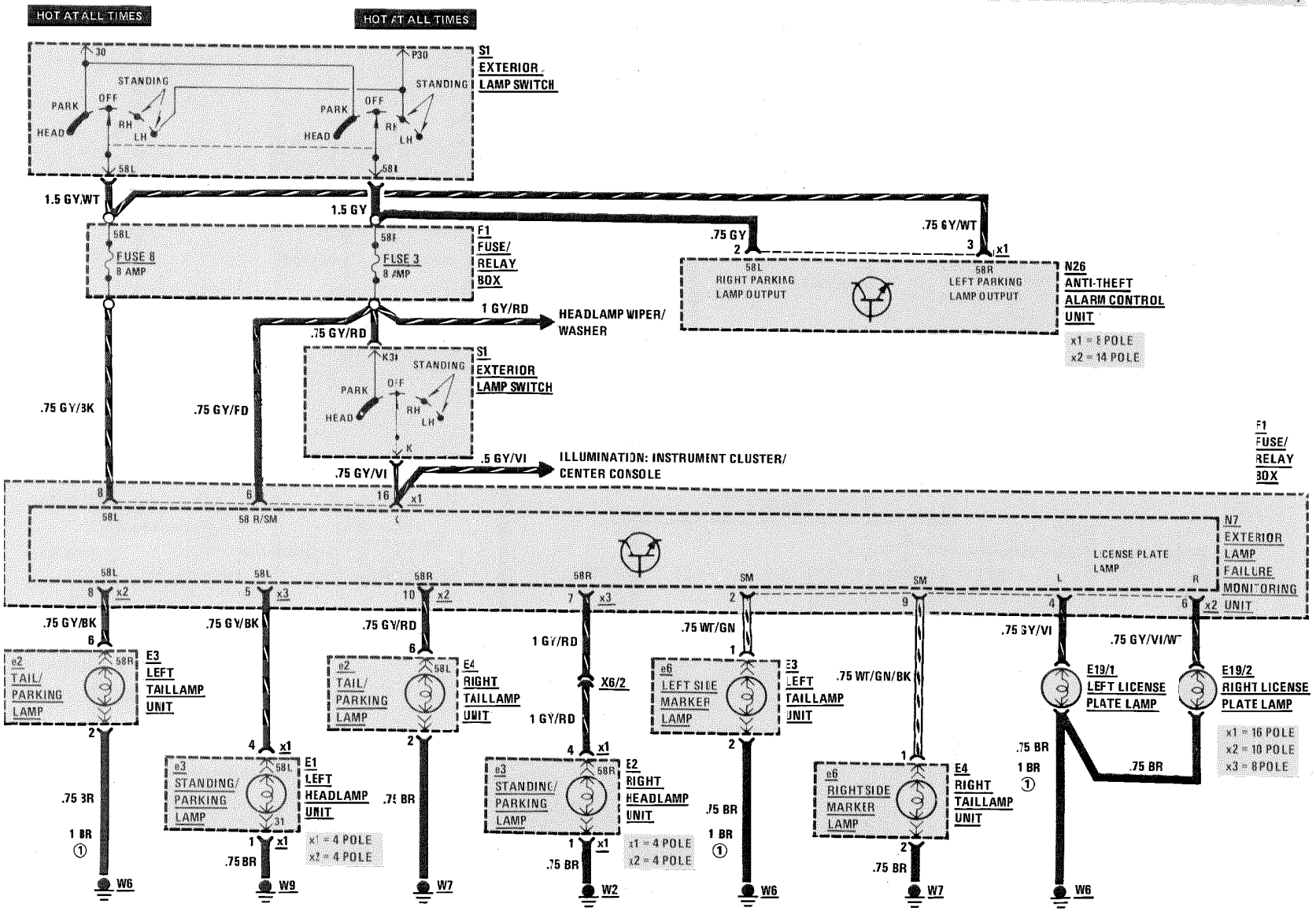

REVISIONS: ① AS OF MODEL YEAR 1990

LAMPS: PARK/TAIL/SIDE MARKER/LICENSE

AS OF MY 1987
300TD/300TE

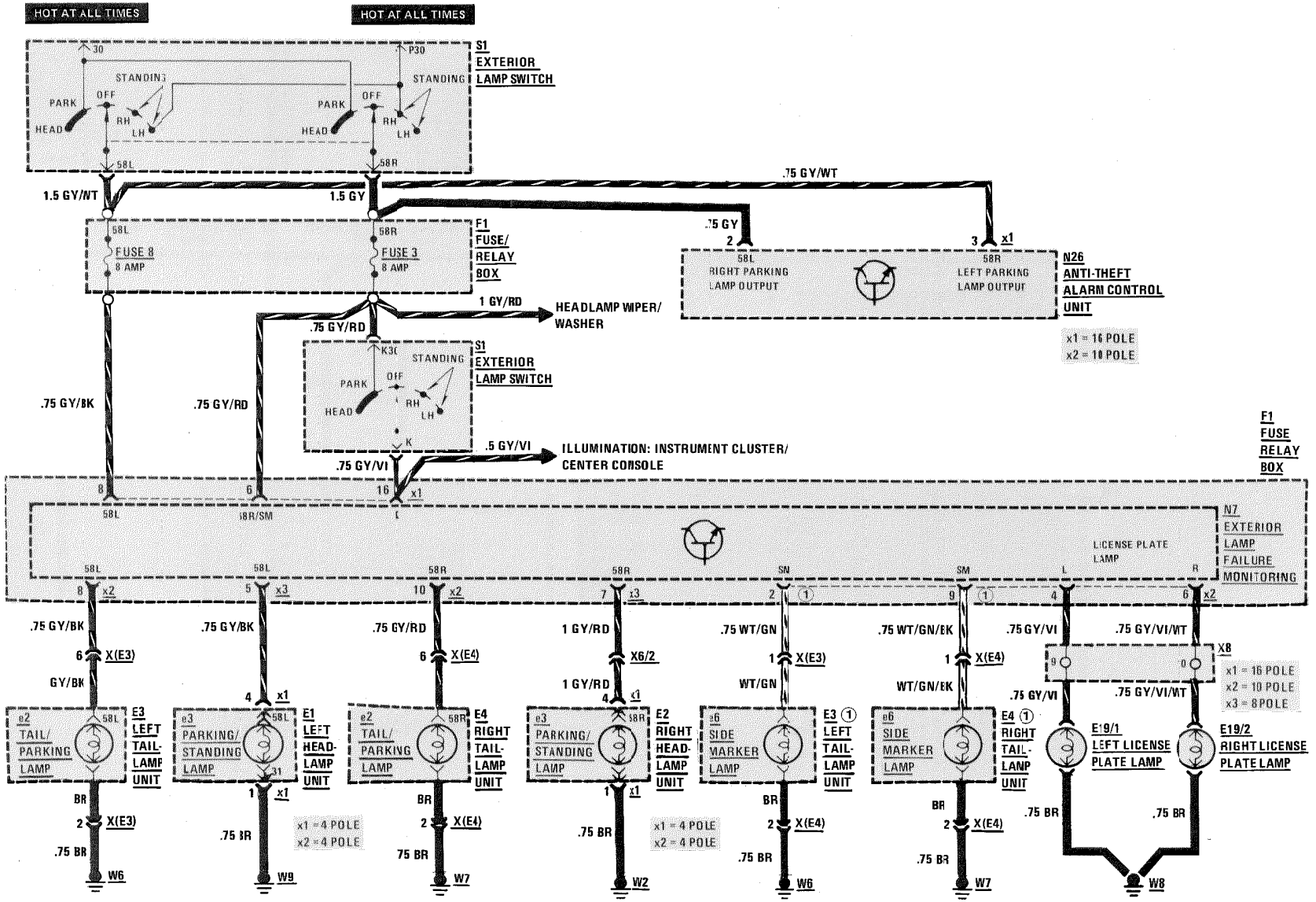

REVISIONS: ① NOT USED AS OF NY 1991

TURN SIGNAL/HAZARD LAMPS

AS OF MY 1986

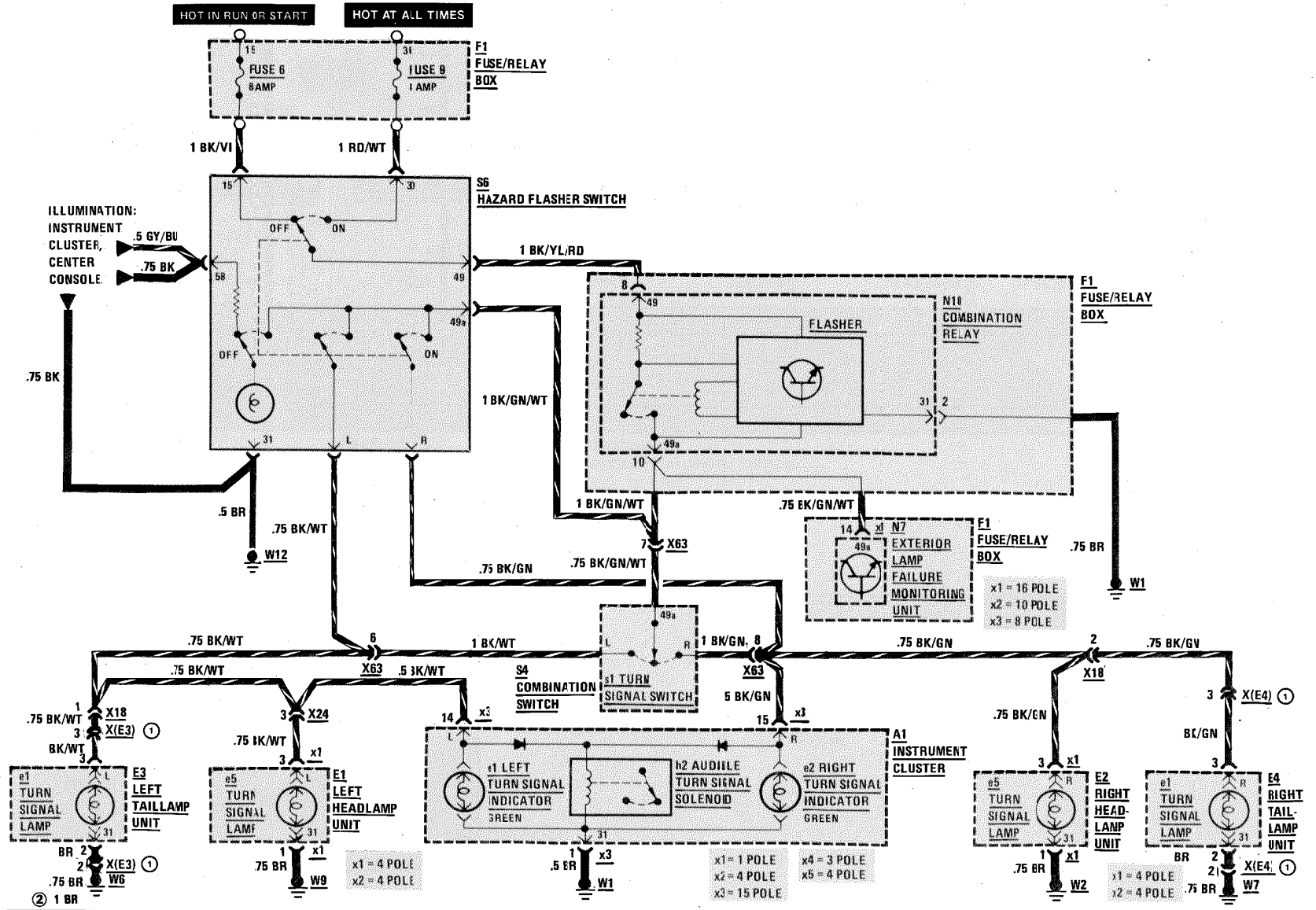

REVISIONS: ① MODEL 124.090 ONLY
② AS OF MY 90, EXCEPT STATION WAGON

COURTESY LAMPS AND TRUNK LAMP

MY 1986

300 D/300 E

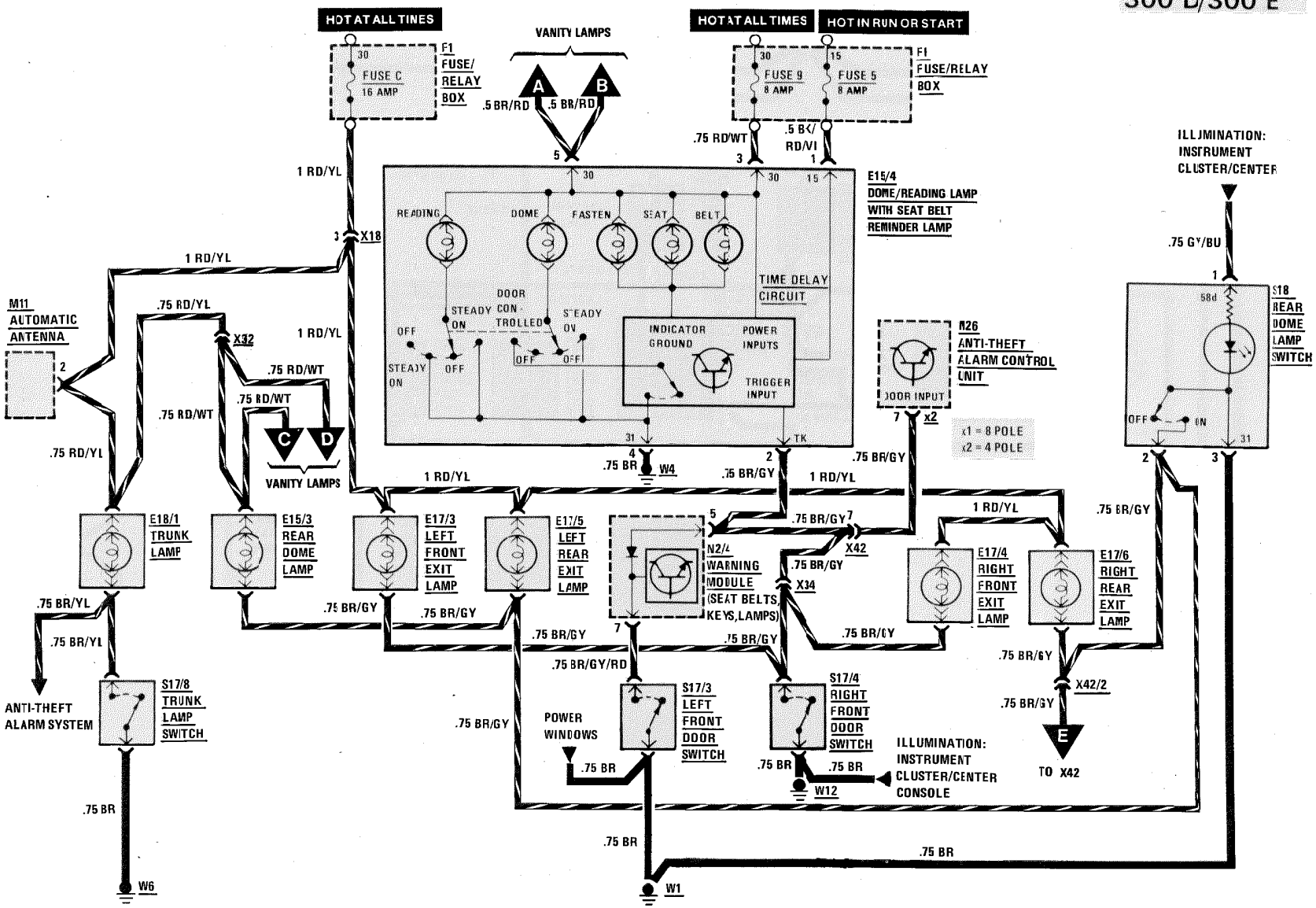

REVISIONS:

COURTESY LAMPS AND TRUNK LAMP (WITHOUT ANTI-THEFT)

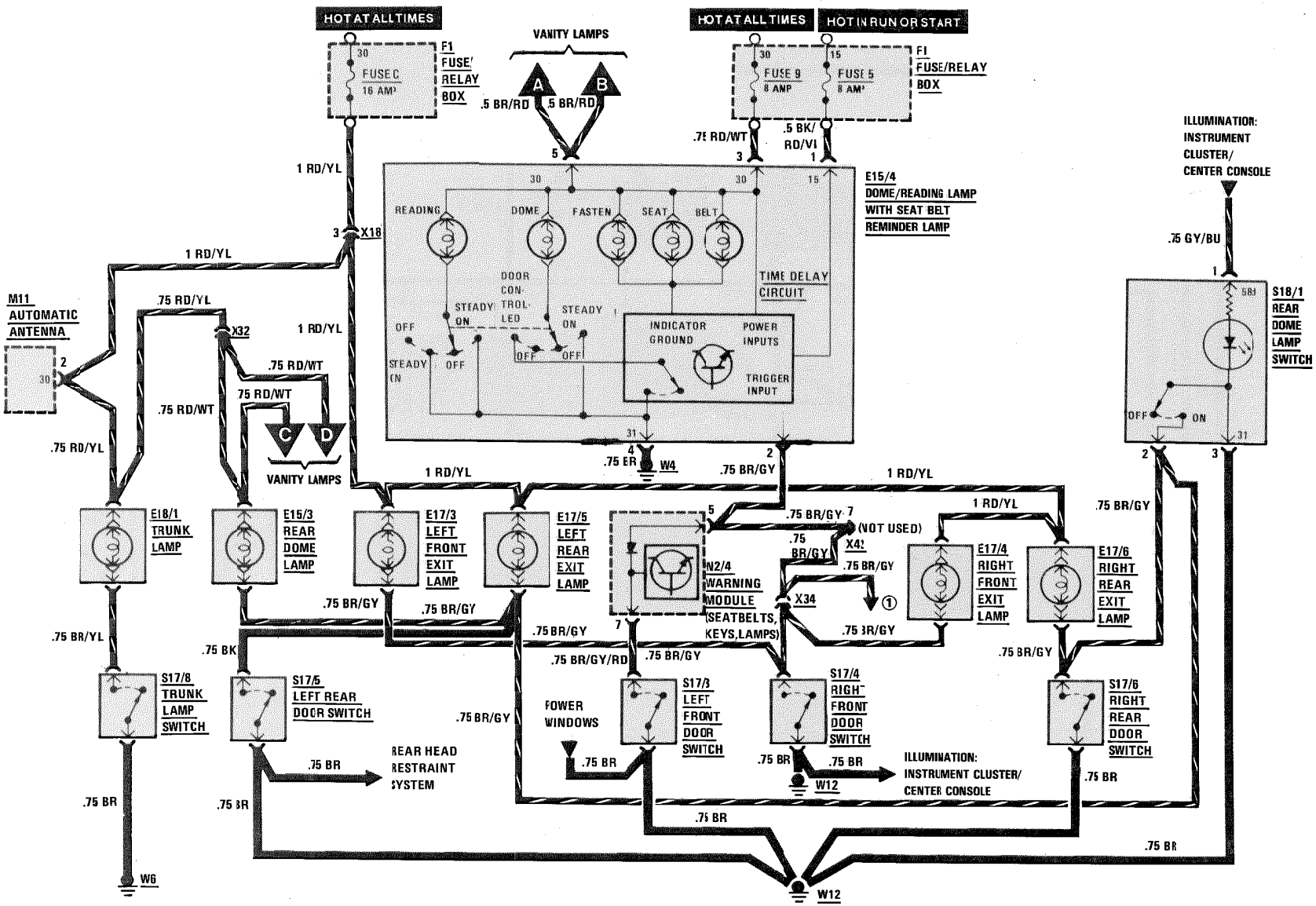

REVISIONS: ① AS OF MY 1989, SEE POWER SEATS PAGE 143

COURTESY LAMPS AND TRUNK LAMP (WITH ANTI-THEFT)

MY 1987-1988
300D/300E

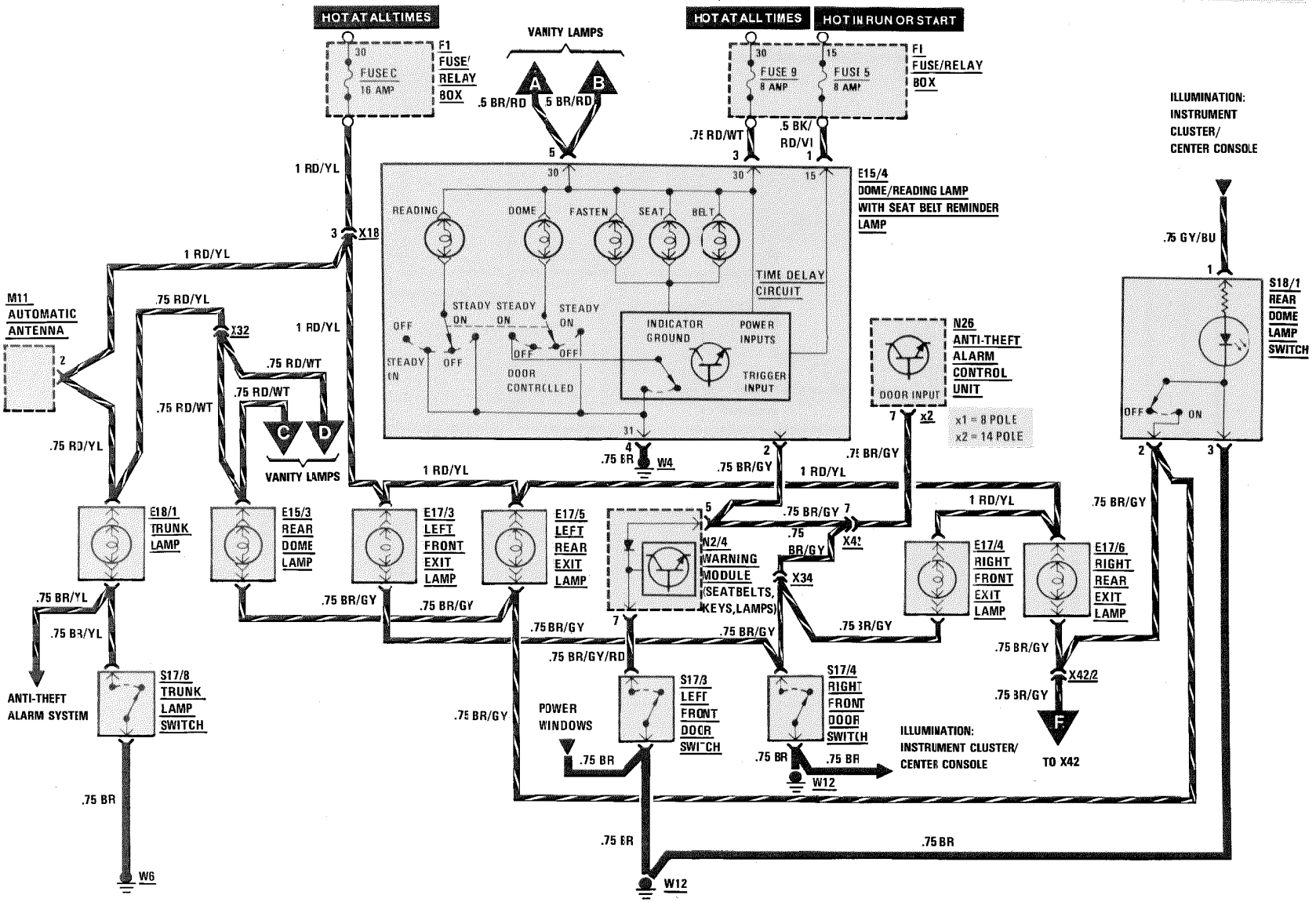

REVISIONS:

COURTESY LAMPS AND TRUNK LAMP (WITH ANTI-THEFT)

MY 1989
300 E

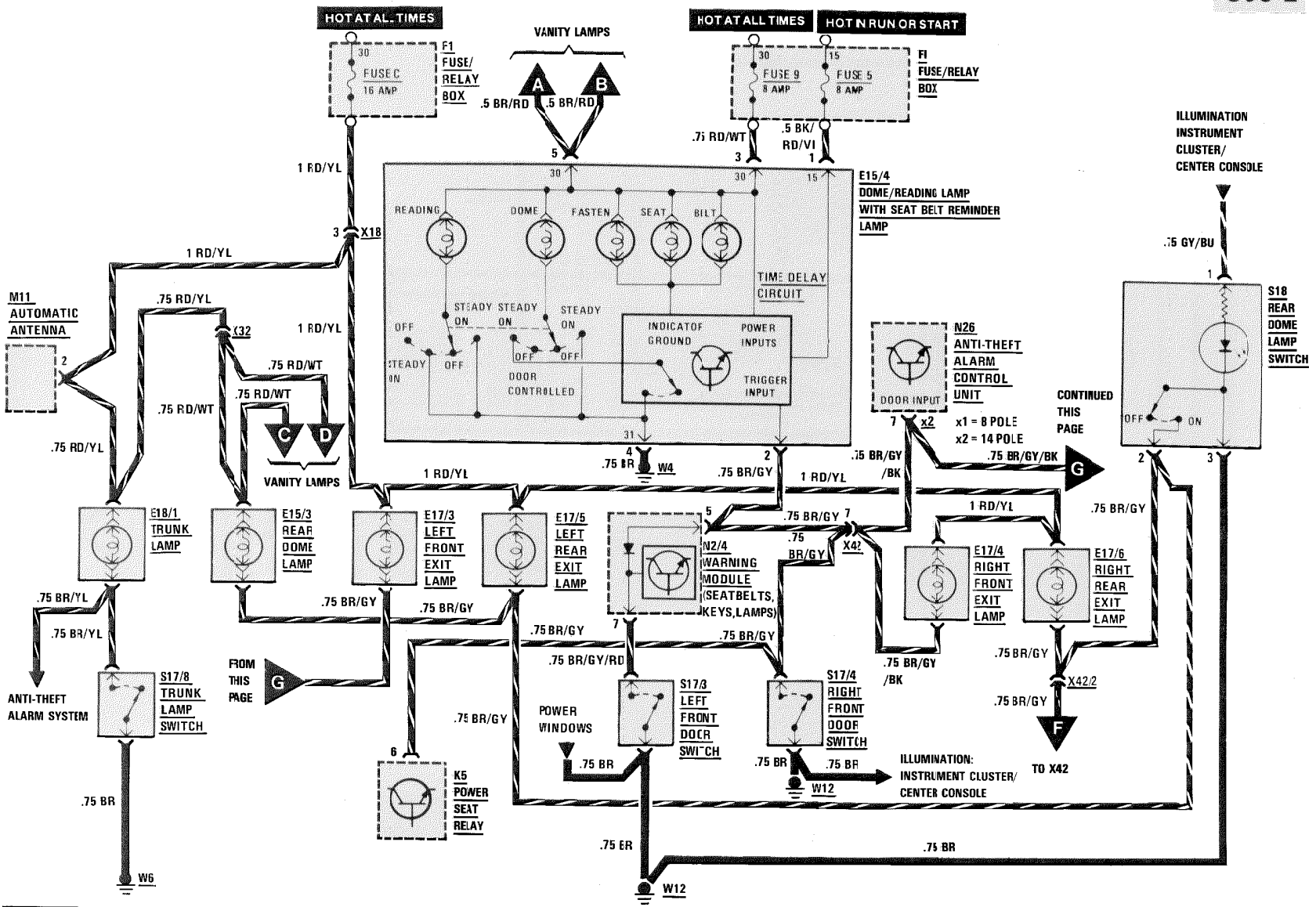

REVISIONS:

COURTESY LAMPS AND TRUNK LAMP

MY 1988-1989

300CE

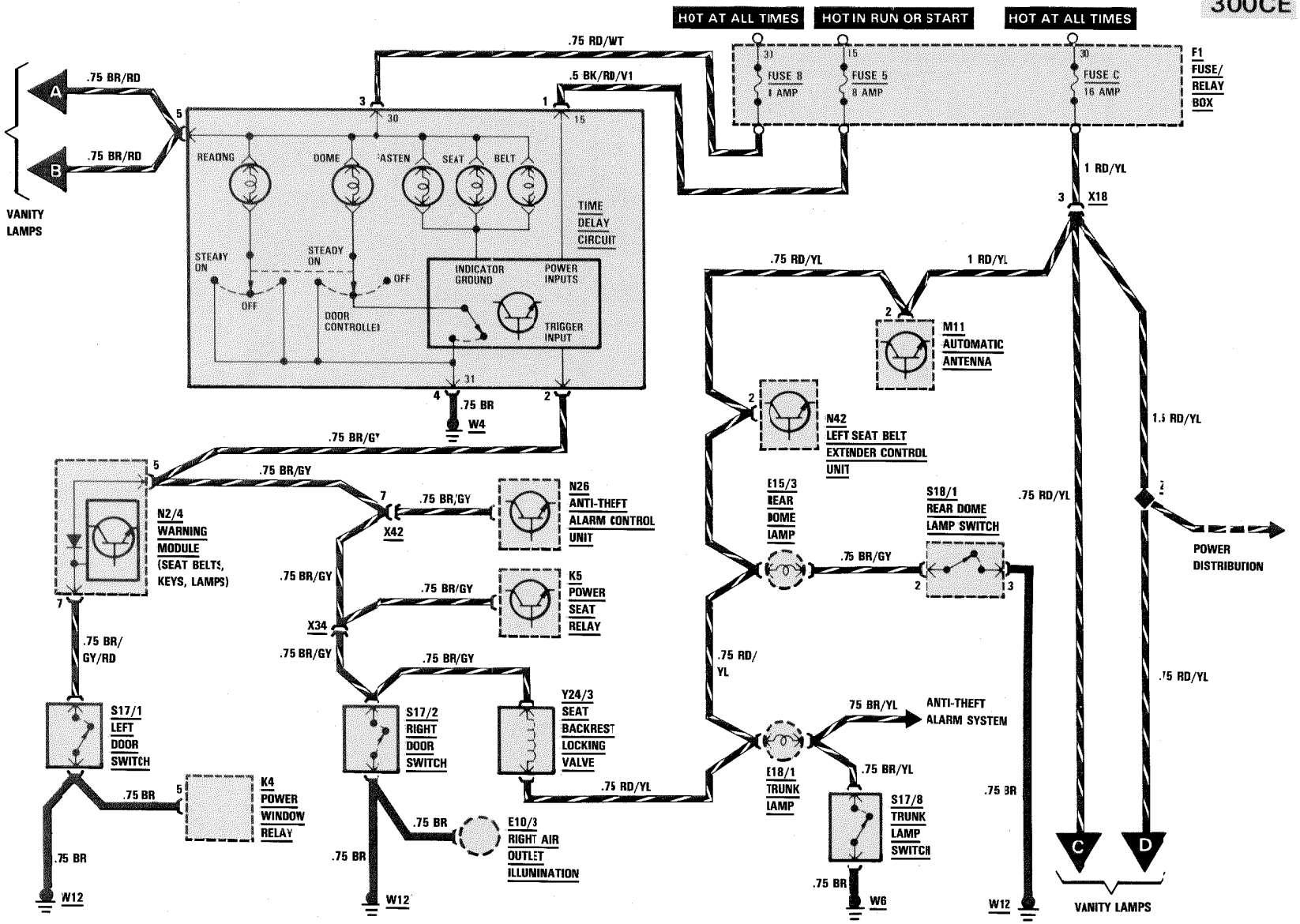

REVISIONS:

COURTESY LAMPS

MY 1987-1989

300TD/300 TE

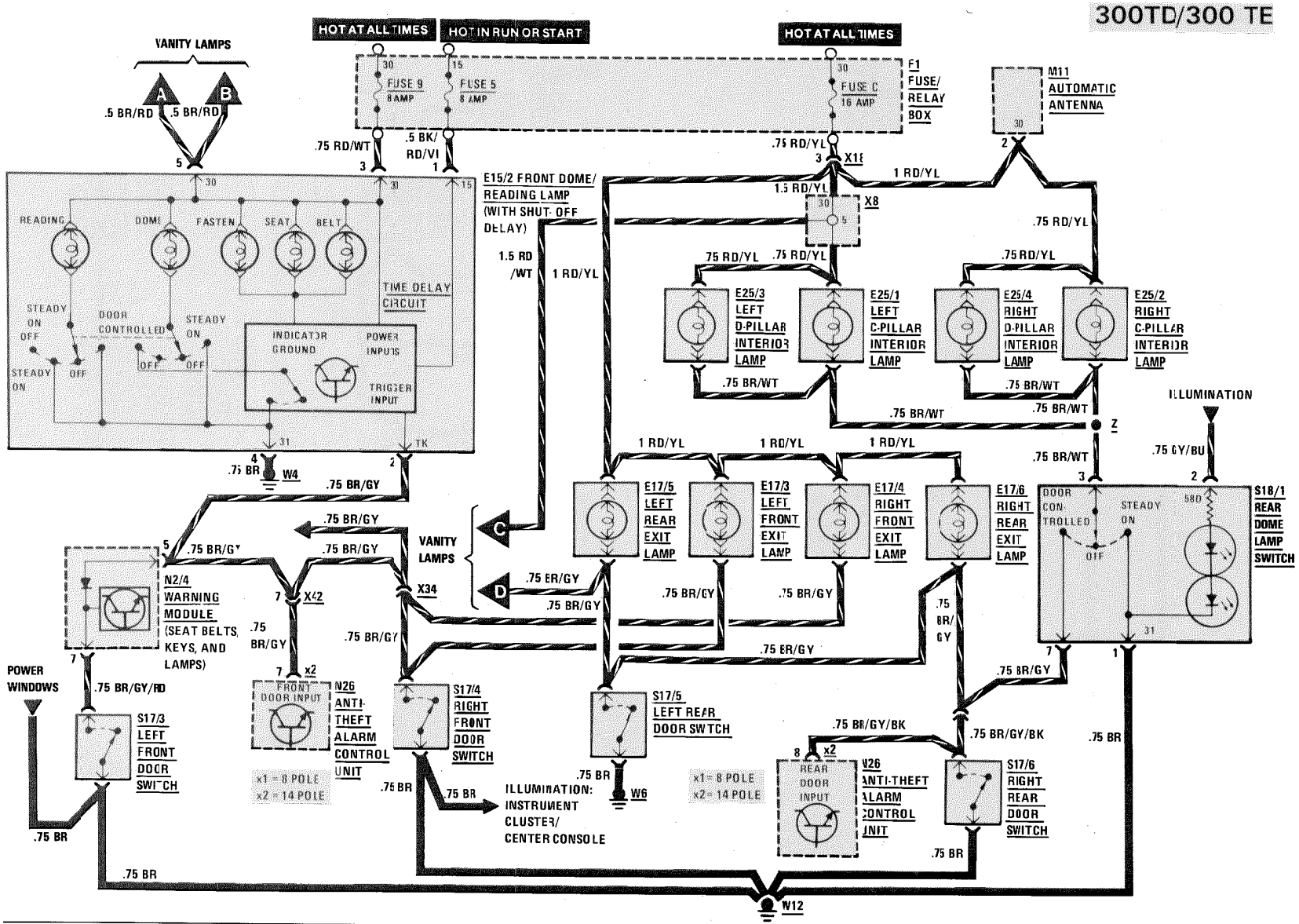

REVISIONS: ① AS OF MY 1989 SEE POWER SEATS PAGE 143

COURTESY LAMPS AND TRUNK LAMP

AS OF MY 1990

300D2.5

300E2.6

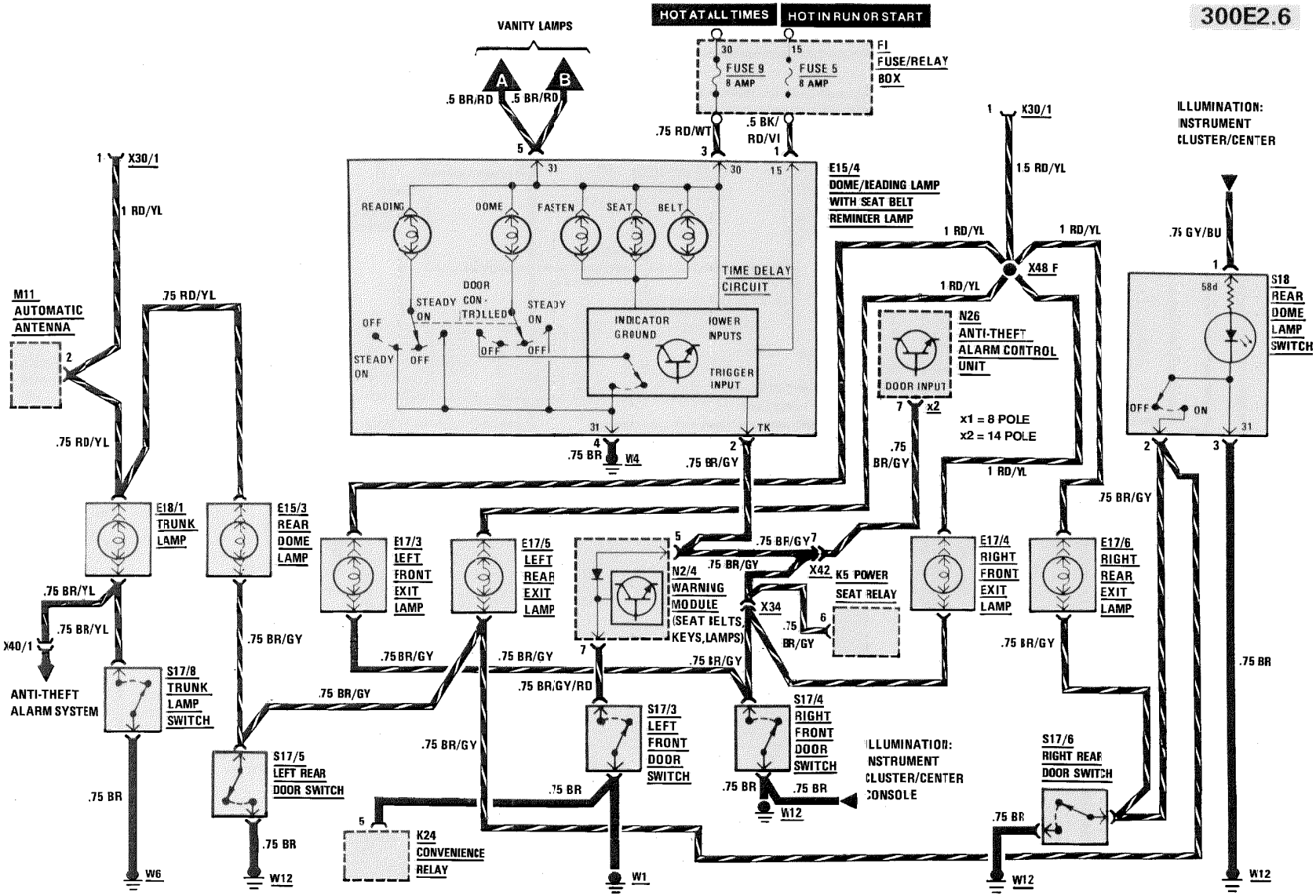

REVISIONS:

COURTESY LAMPS AND TRUNK LAMP (WITH ANTI-THEFT)

AS OF MY 1990

300 E

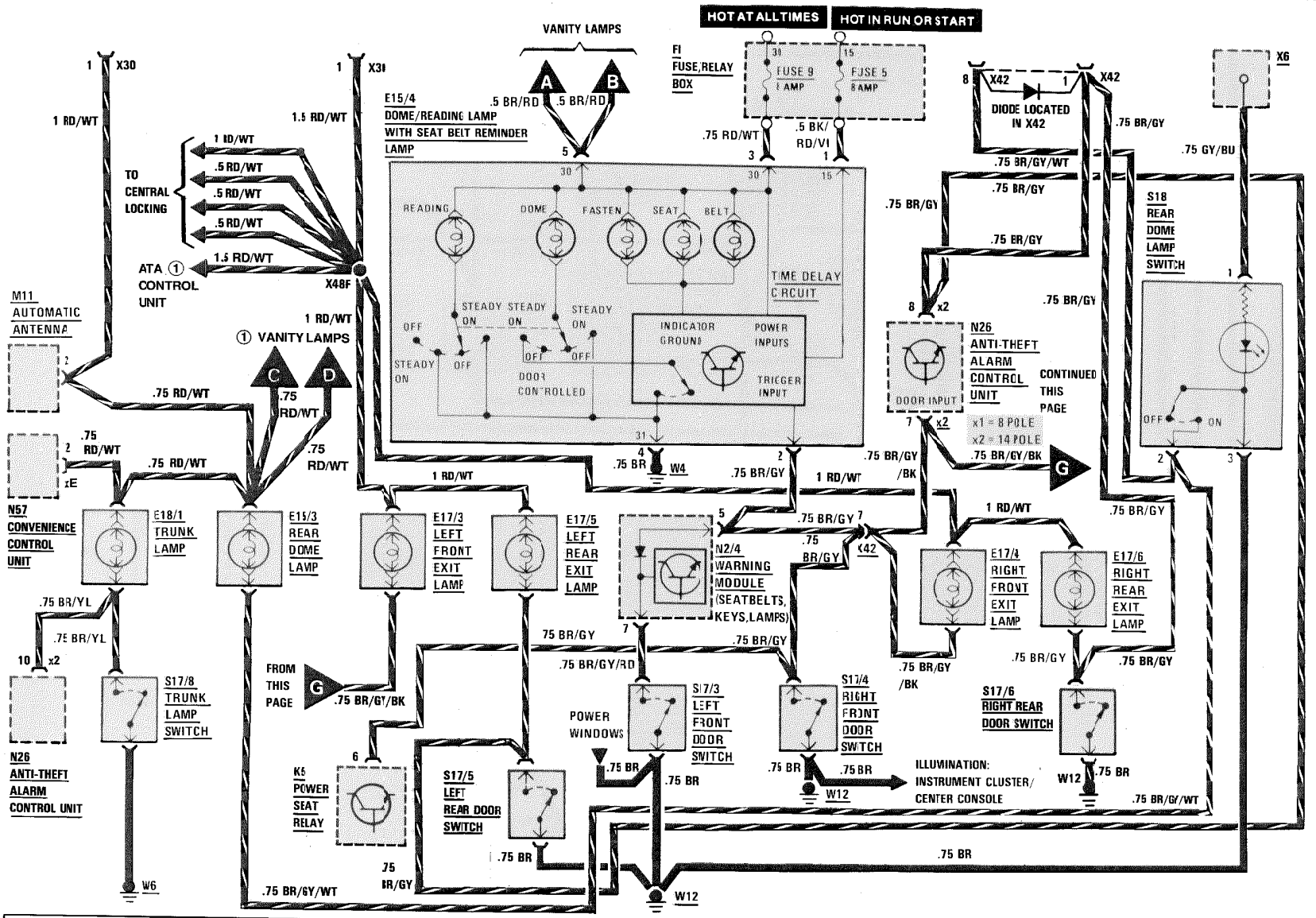

REVISIONS: ① AS OF MY 1991

COURTESY LAMPS AND TRUNK LAMP

AS OF MY 1990

300CE

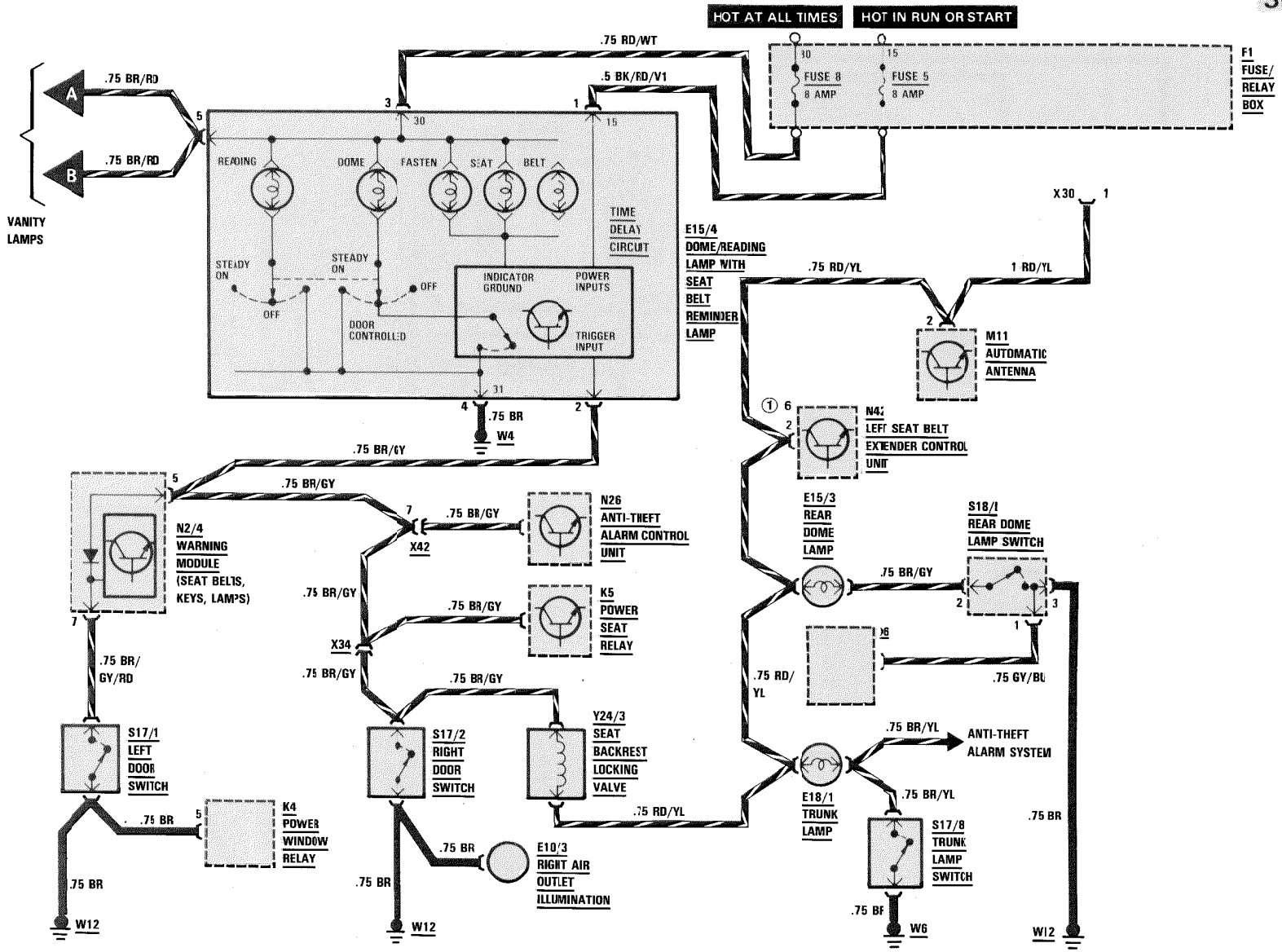

REVISIONS: ① AS OF MY 1991

COURTESY LAMPS

AS OF MY 1990

300 TE

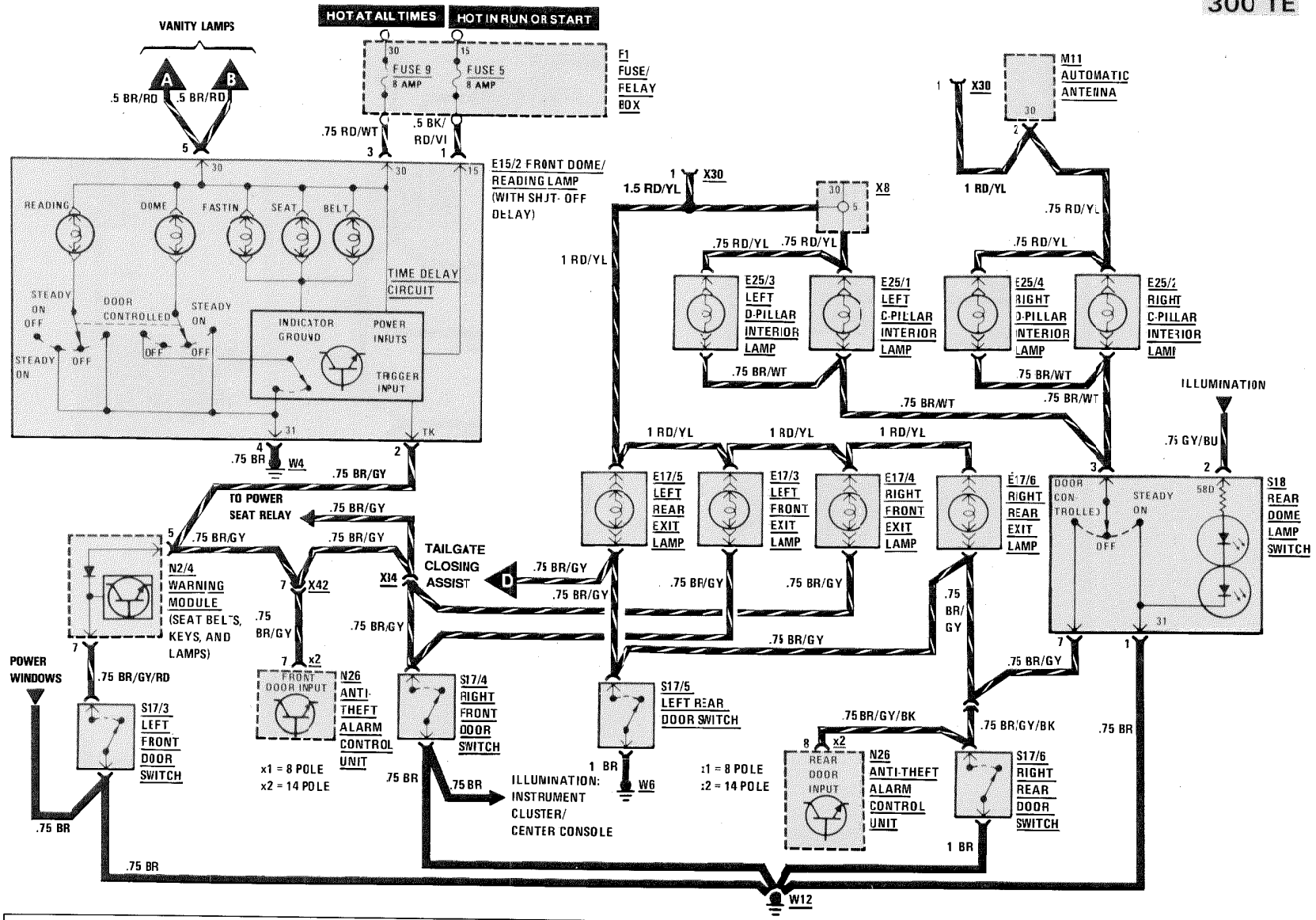

REVISIONS: ① AS OF MY 1989 SEE POWER SEATS PAGE 143

VANITY LAMPS AND READING LAMPS

AS OF MY 1986
SEDAN ONLY

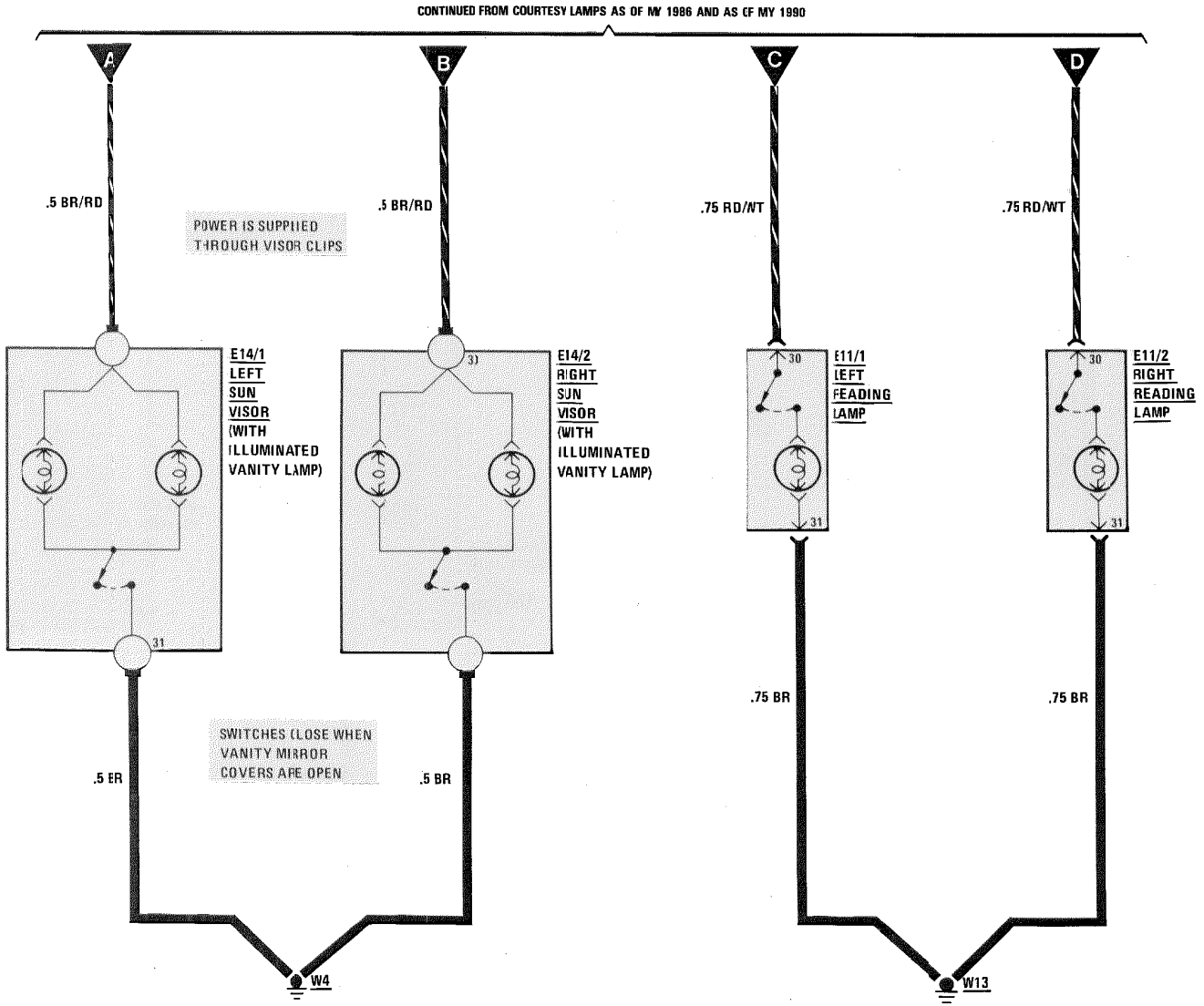

REVISIONS:

VANITY LAMPS AND EXIT LAMPS

CONTINUED FROM COURTESY LAMPS MY 1988-1989

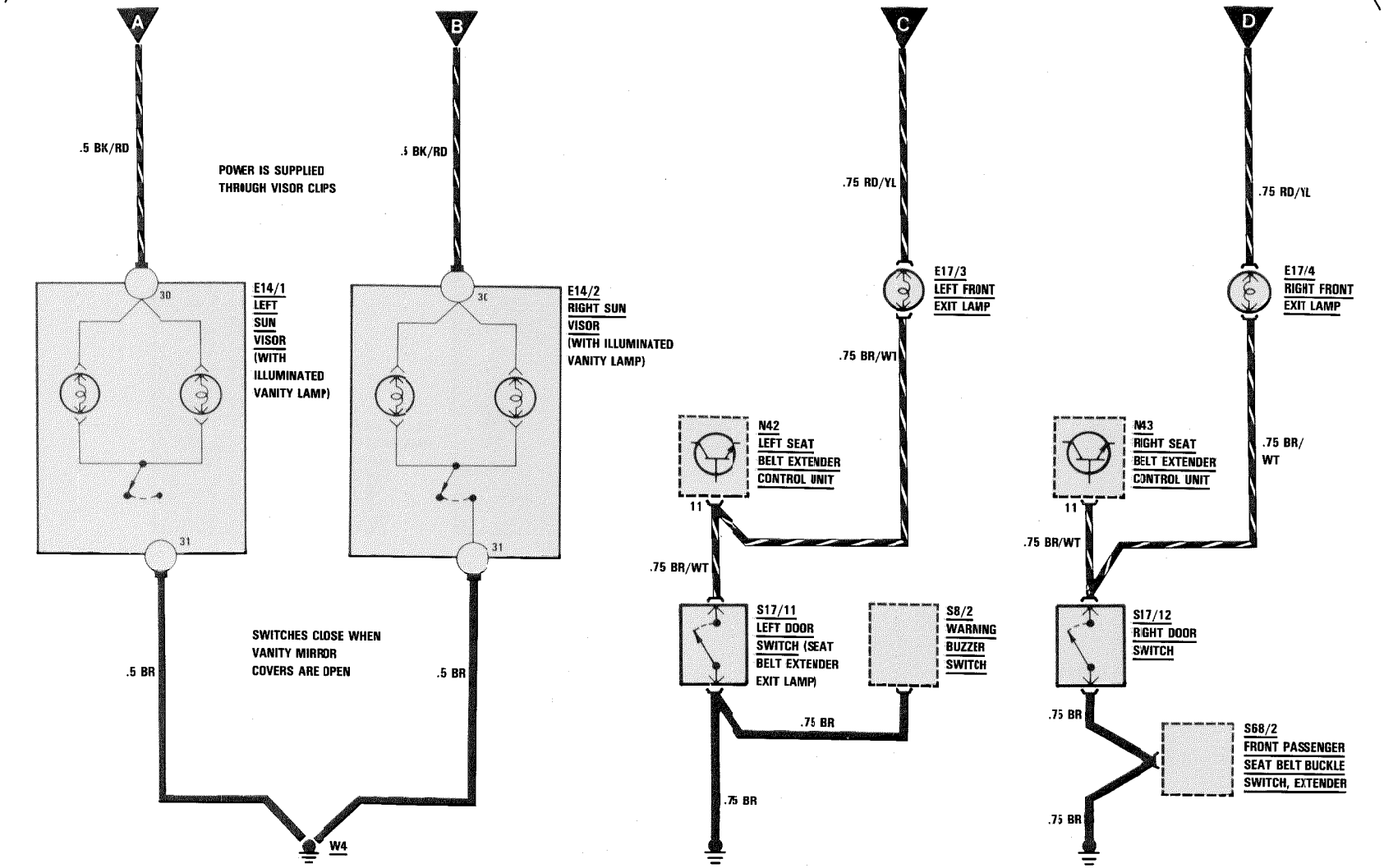

REVISIONS:

VANITY LAMPS AND TAILGATE CLOSING ASSIST

MY 1987-1989
300TD/300 TE

CONTINUED COURTESY LAMPS MY 1987-1989

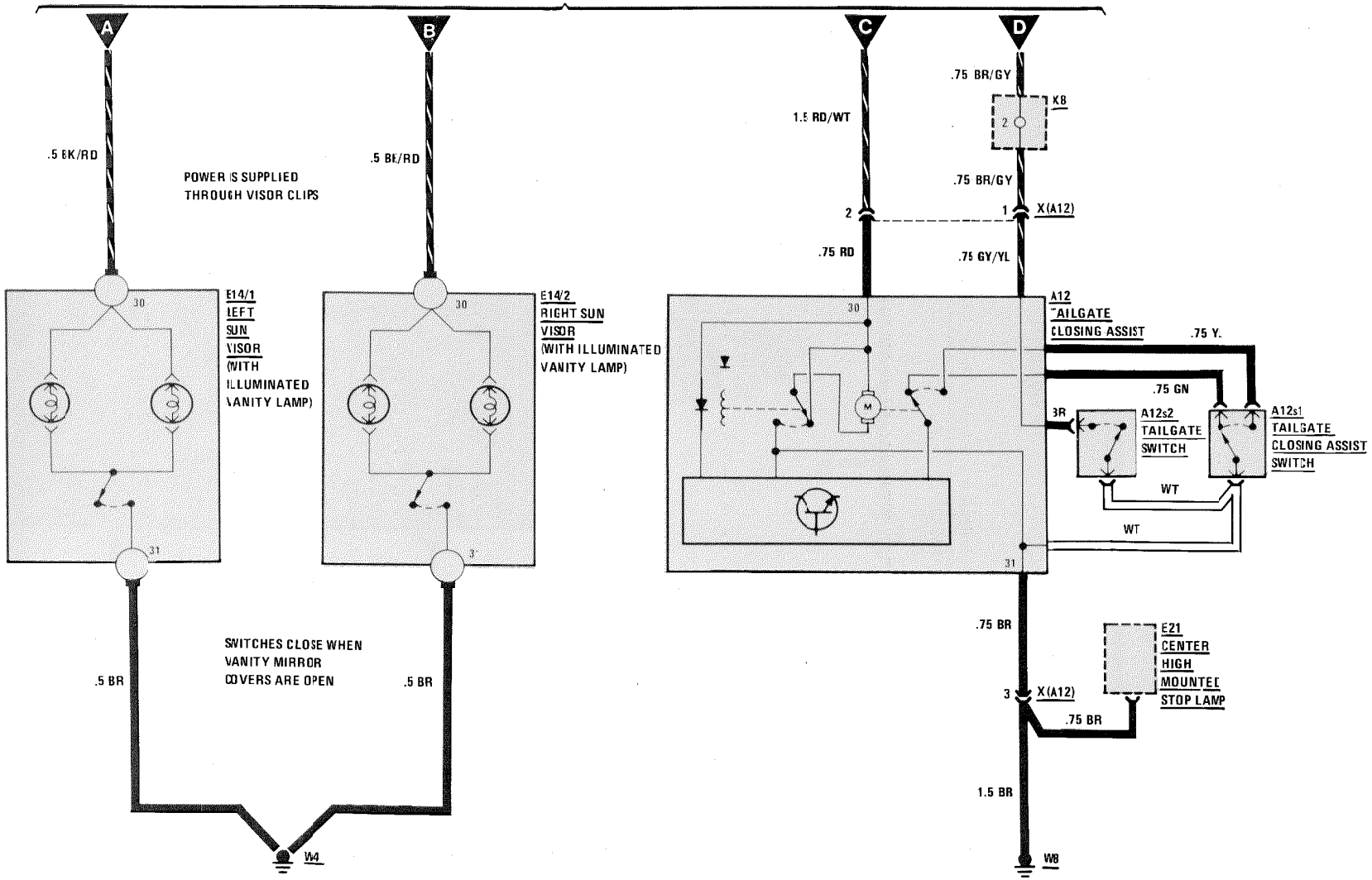

REVISIONS:

VANITY LAMPS AND EXIT LAMPS

AS OF MY 1990

300CE

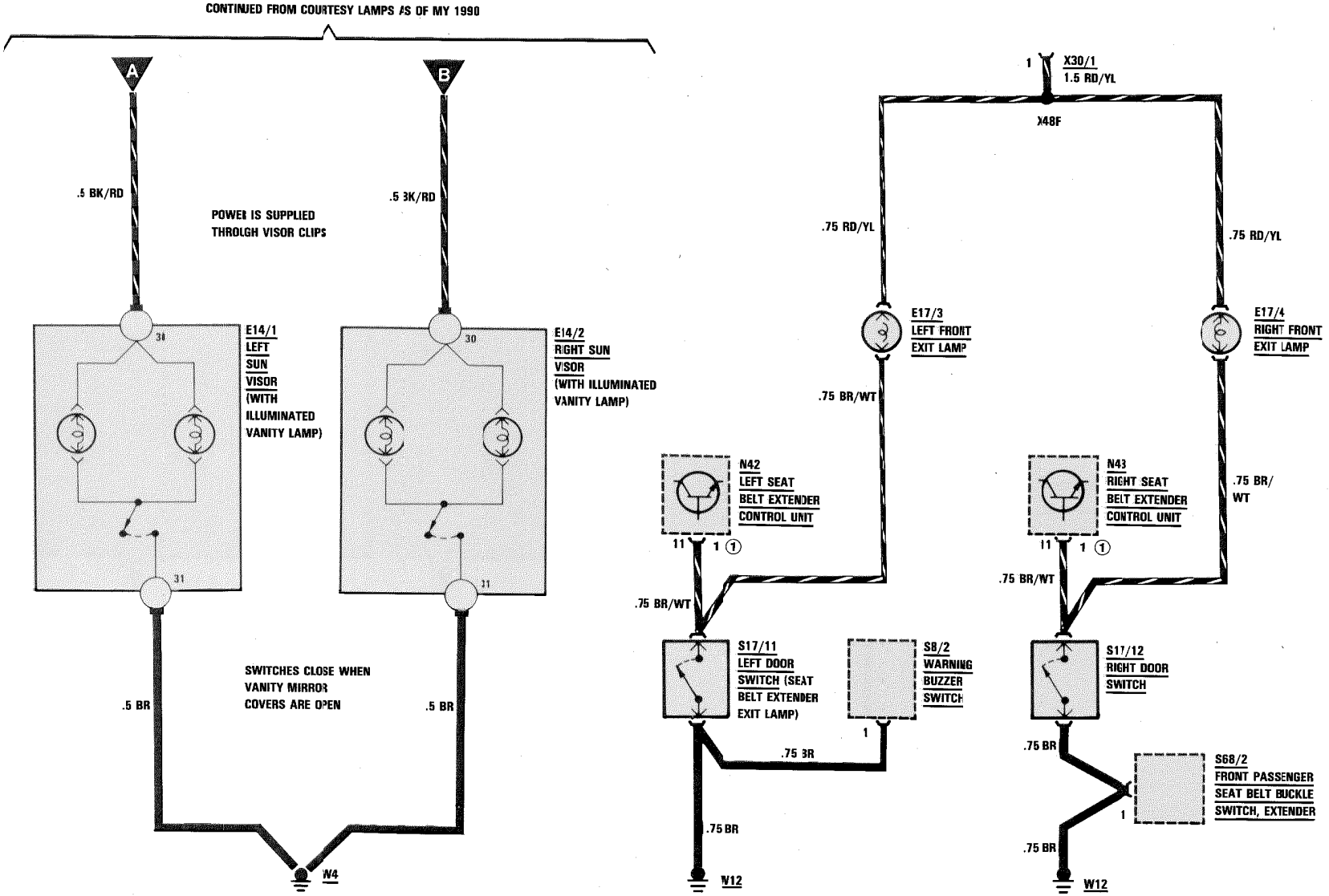

REVISIONS: ① AS OF MY 1991

VANITY LAMPS AND TAILGATE CLOSING ASSIST

AS OF MY 1990
300 TE

CONTINUED FROM COURTESY LAMPS AS OF MY 1990

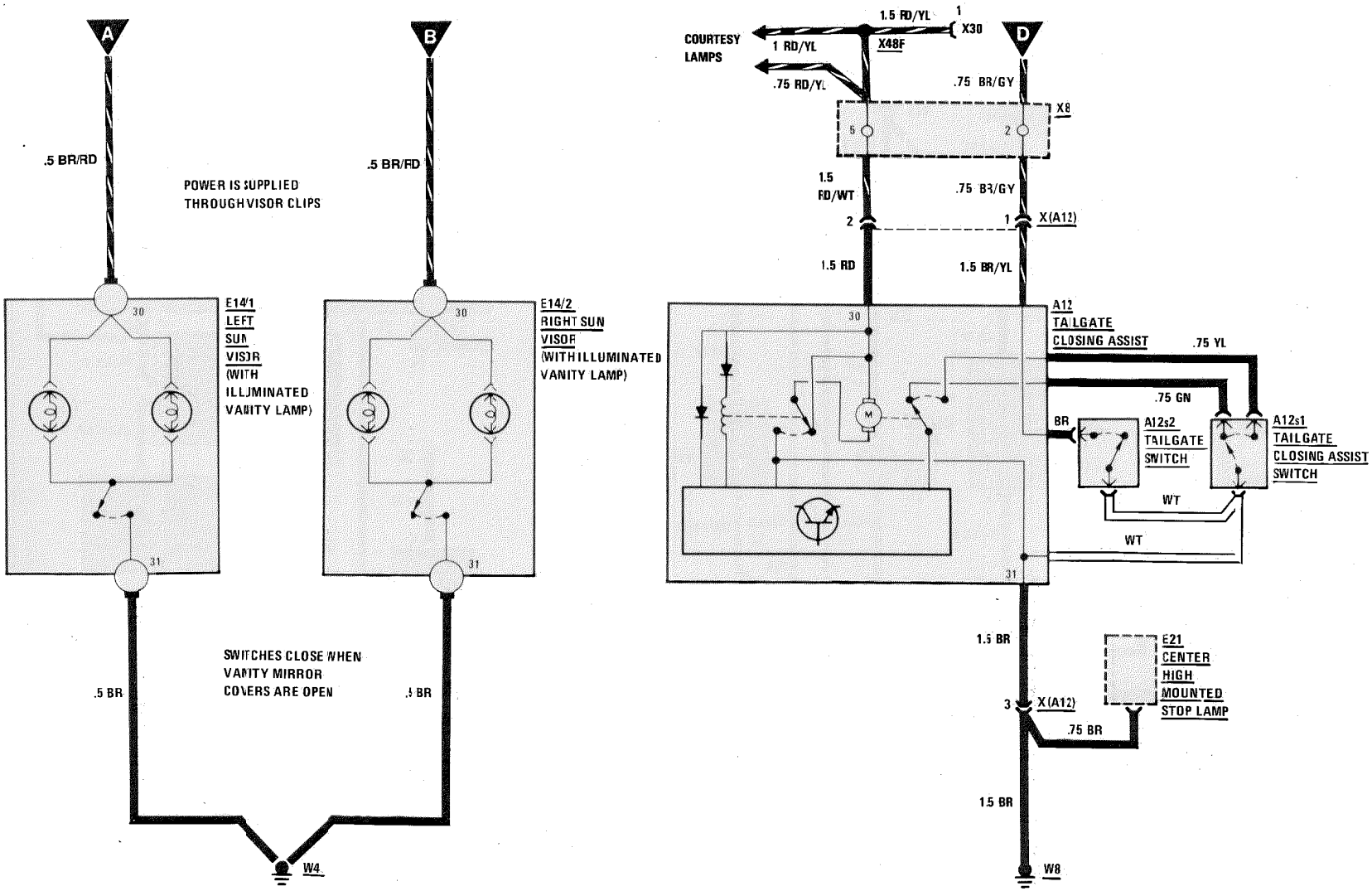

REVISIONS:

ILLUMINATION: INSTRUMENT CLUSTER/CENTER CONSOLE

MY 1986
BEFORE 1/1986 PRODUCTION
300E

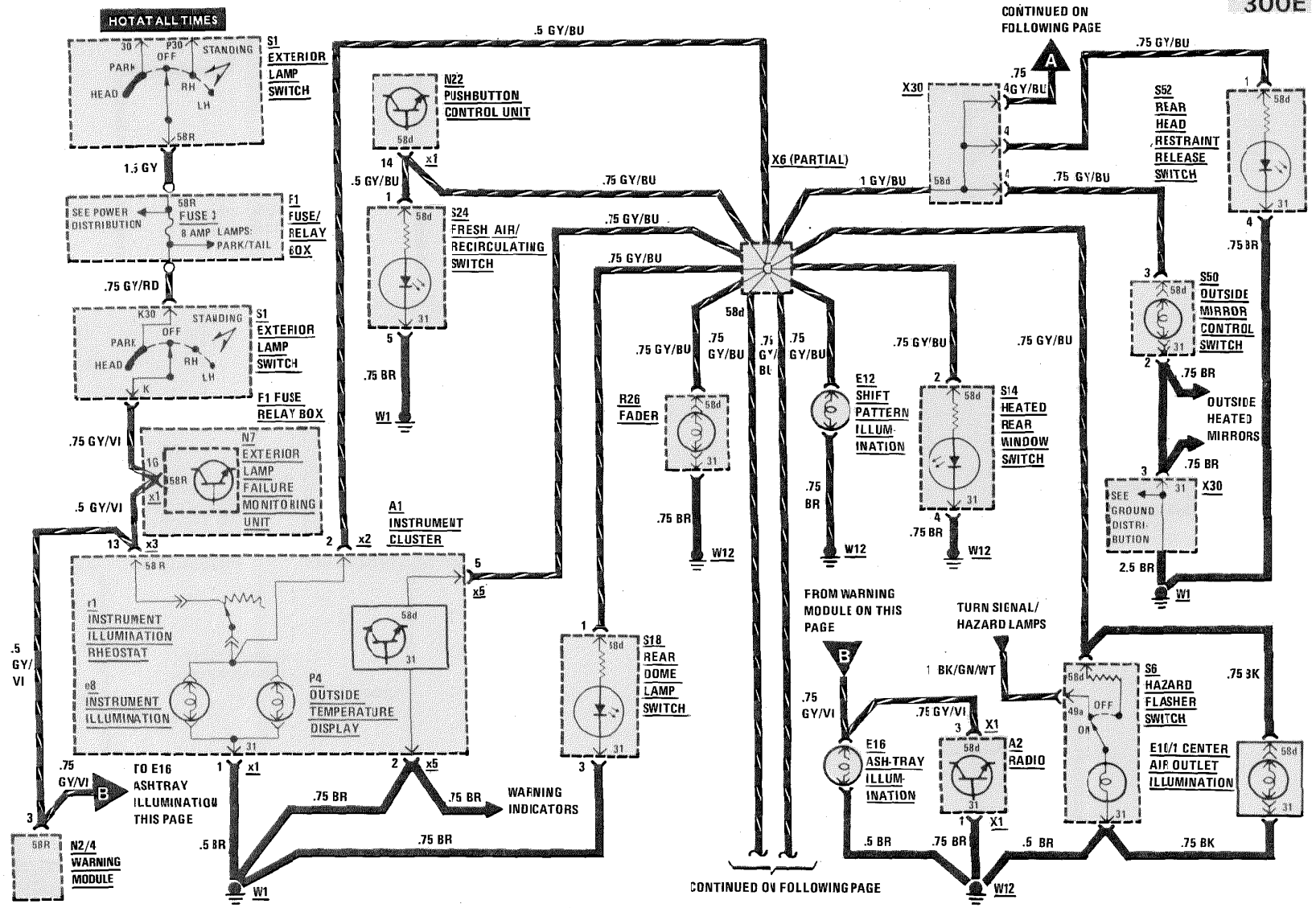

REVISIONS:

ILLUMINATION: INSTRUMENT CLUSTER/CENTER CONSOLE

MY 1986

BEFORE 1/1986 PRODUCTION

300 E

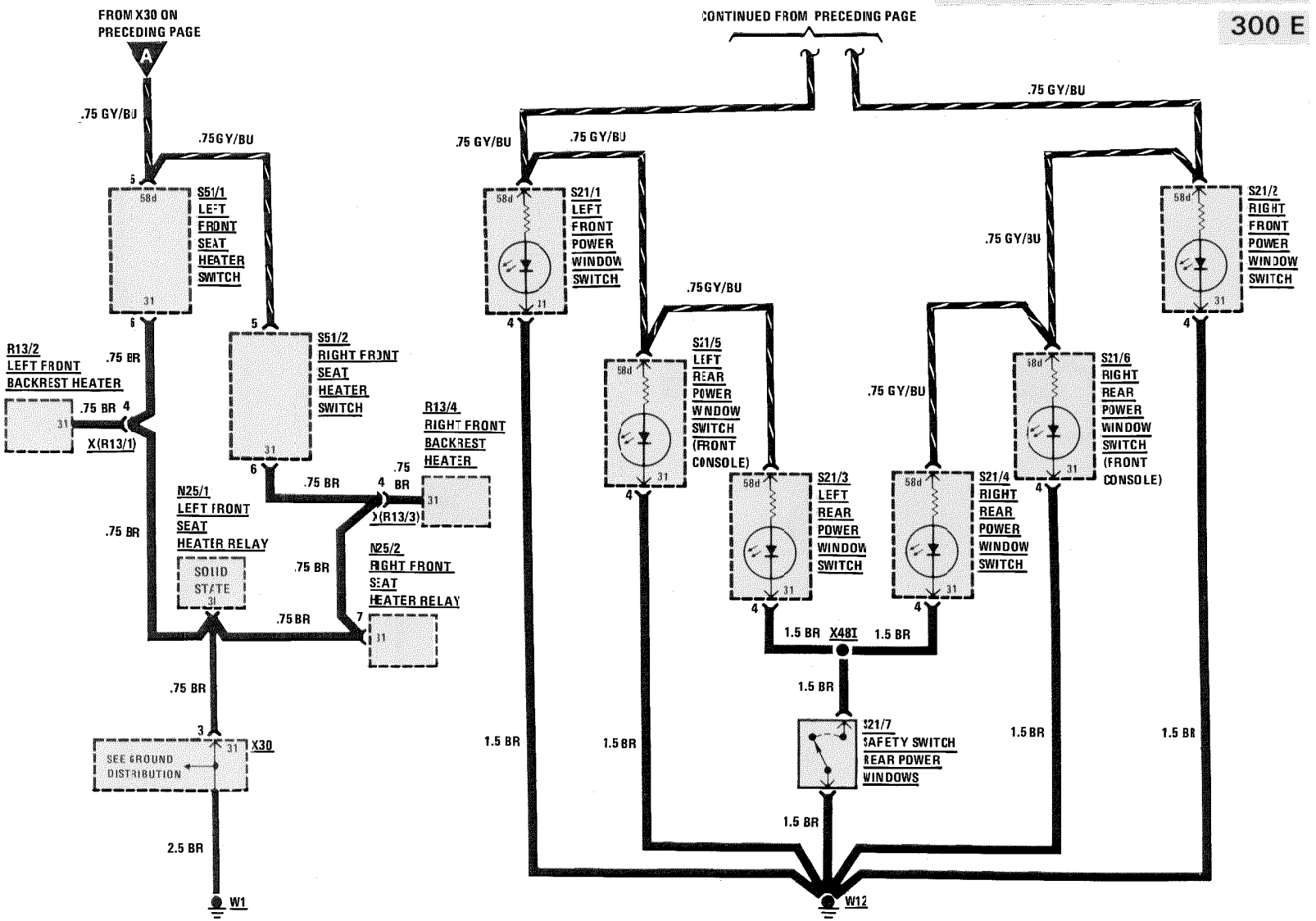

REVISIONS:

ILLUMINATION: INSTRUMENT CLUSTER/CENTER CONSOLE

MY 1986
BEFORE 1/1986 PRODUCTION
300 E

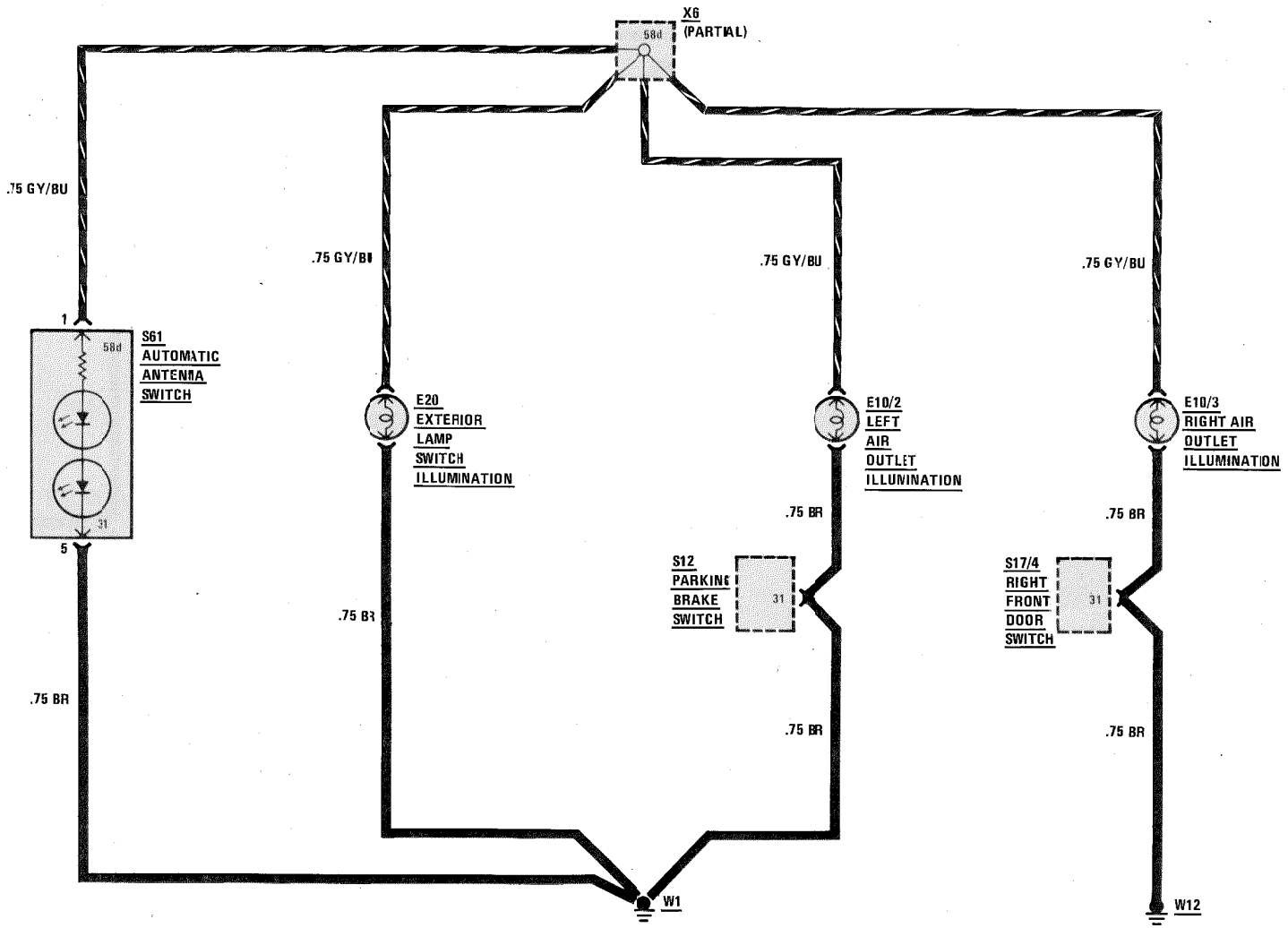

REVISIONS:

ILLUMINATION: INSTRUMENT CLUSTER/CENTER CONSOLE

AS OF MY 1986

AFTER 1/1986 PRODUCTION

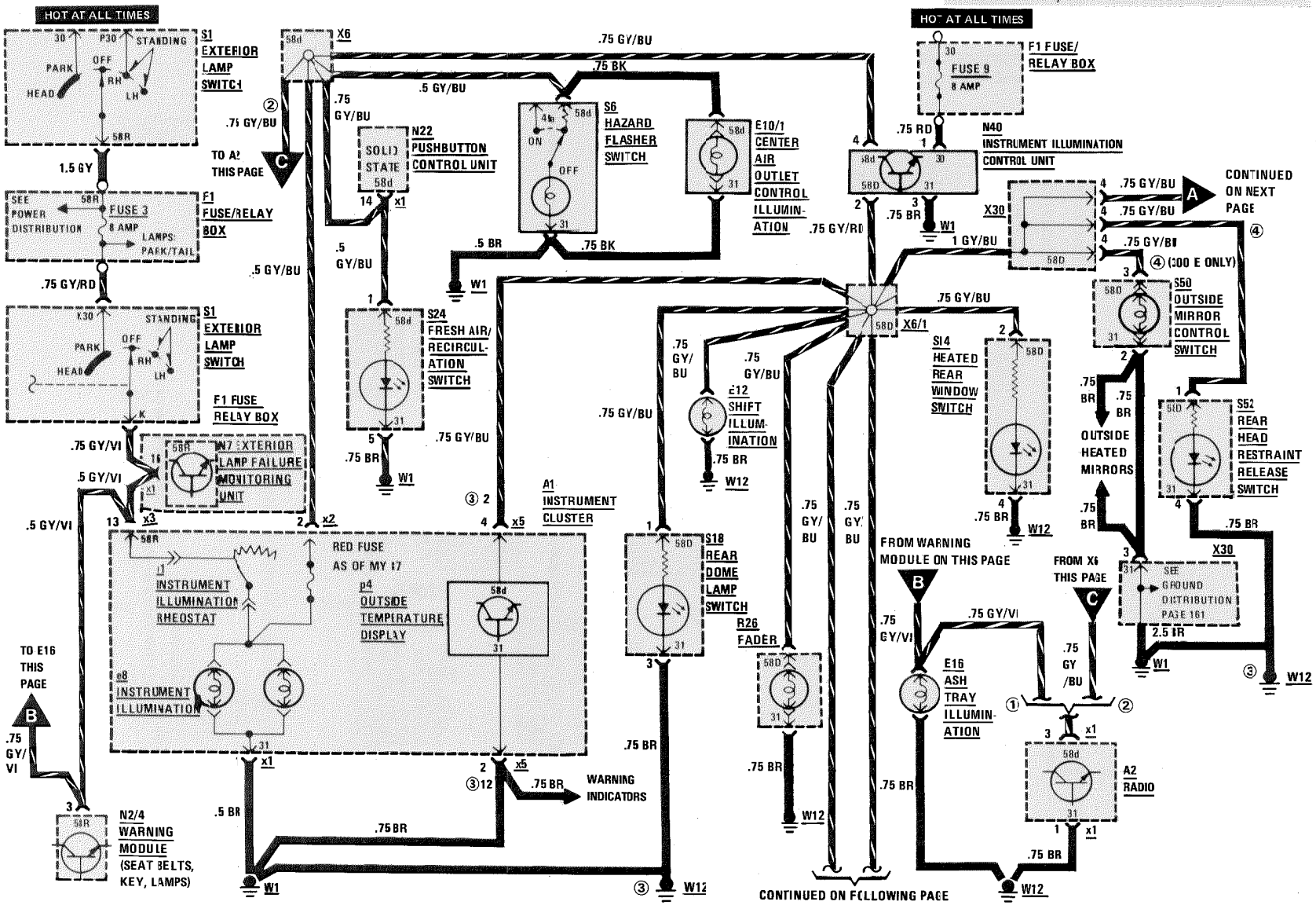

REVISIONS:
① MY 1986 AND MY 1987
② AS OF MY 1988
③ AS OF MY 1990
④ AS OF MY 1990, CONNECTED DIRECTLY TO X6/1

ILLUMINATION: INSTRUMENT CLUSTER/CENTER CONSOLE

AS OF MY 1986

AFTER 1/1986 PRODUCTION

(For Component Locations See Page 209)

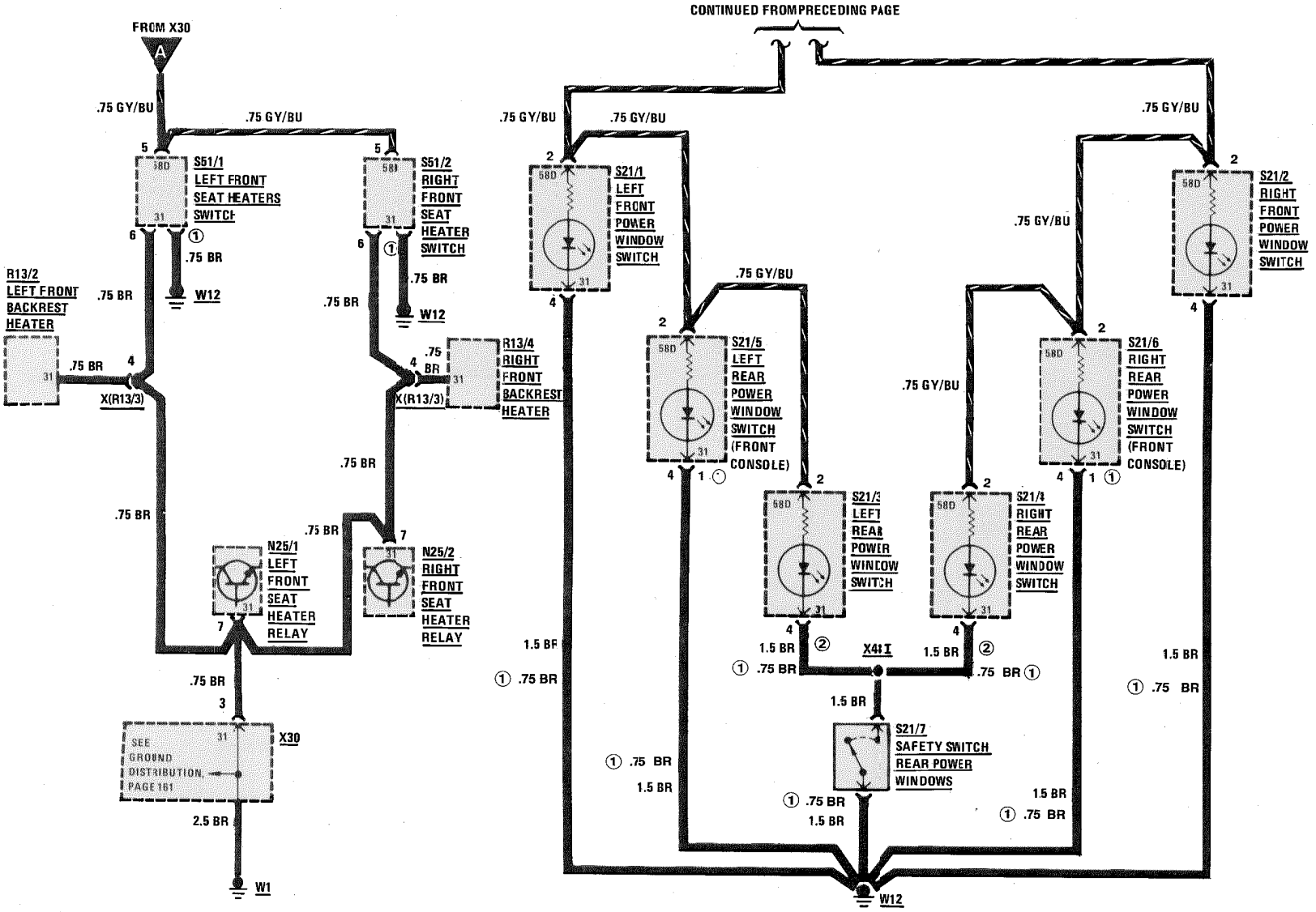

REVISIONS: ① AS OF MY 1990

② AS OF MY 1990, CONNECTED DIRECTLY TO S21/7

ILLUMINATION: INSTRUMENT CLUSTER/CENTER CONSOLE

MY 1986-1989

AFTER 1/1986 PRODUCTION

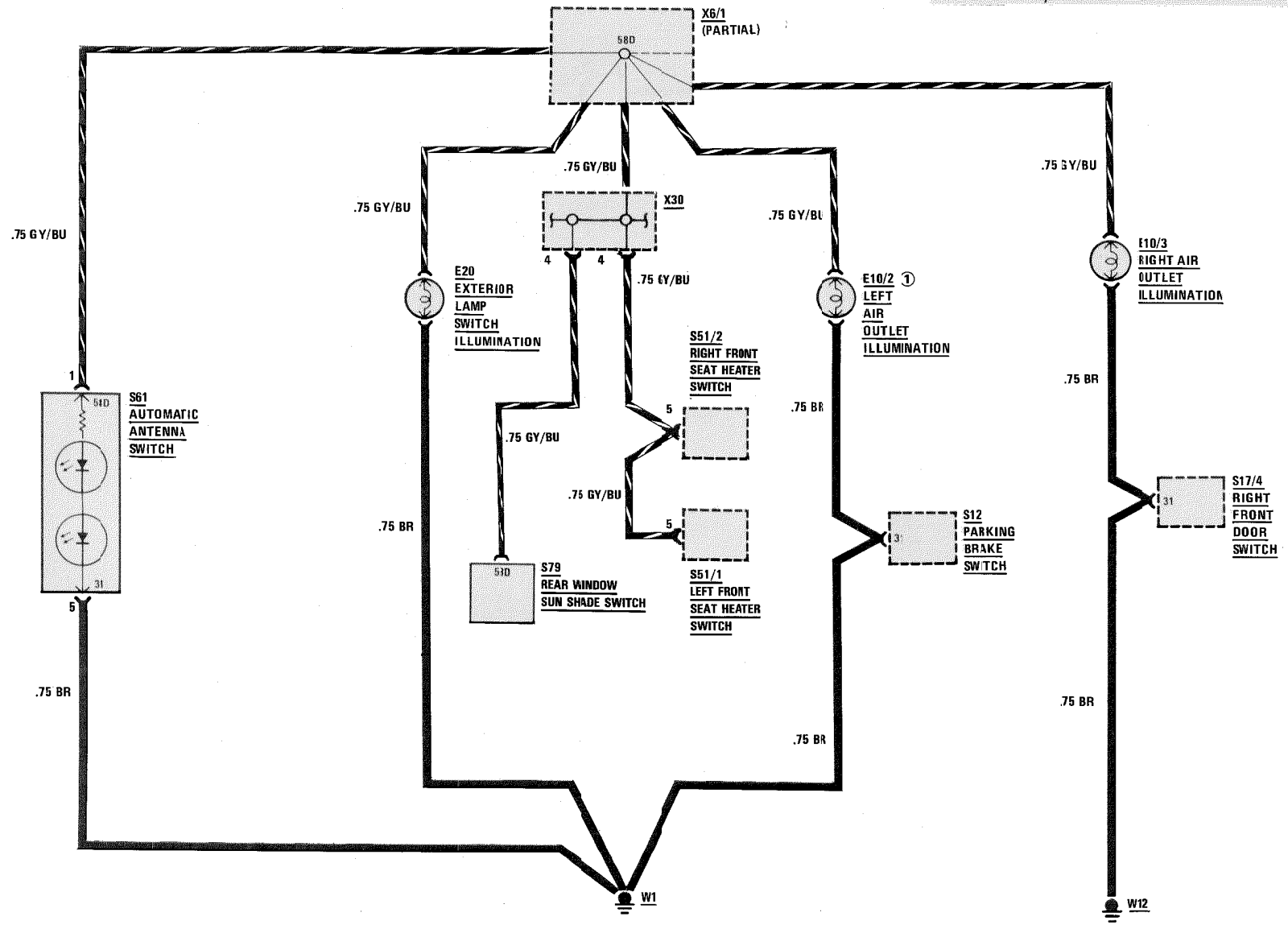

REVISIONS: ① AS OF MY 1989 E10/2 IS CONNECTED DIRECTLY TO GROUND

ILLUMINATION: INSTRUMENT CLUSTER/CENTER CONSOLE

AS OF MY 1990

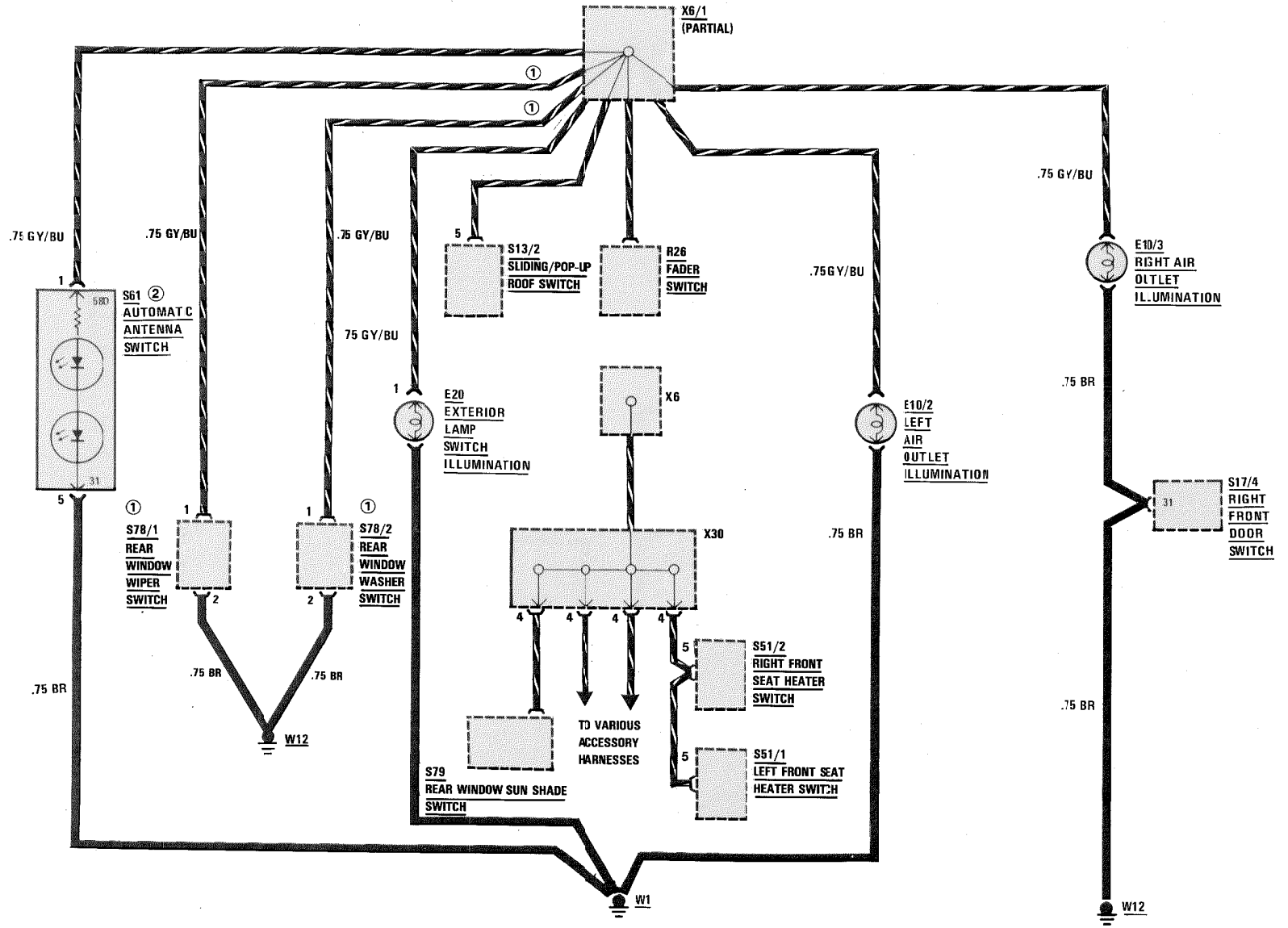

REVISIONS: ① 300 TE ONLY
② NOT USED AS OF MY 1991

GLOVE BOX LAMP/CIGAR LIGHTER/RADIO/AUTOMATIC ANTENNA MY 1986-1989

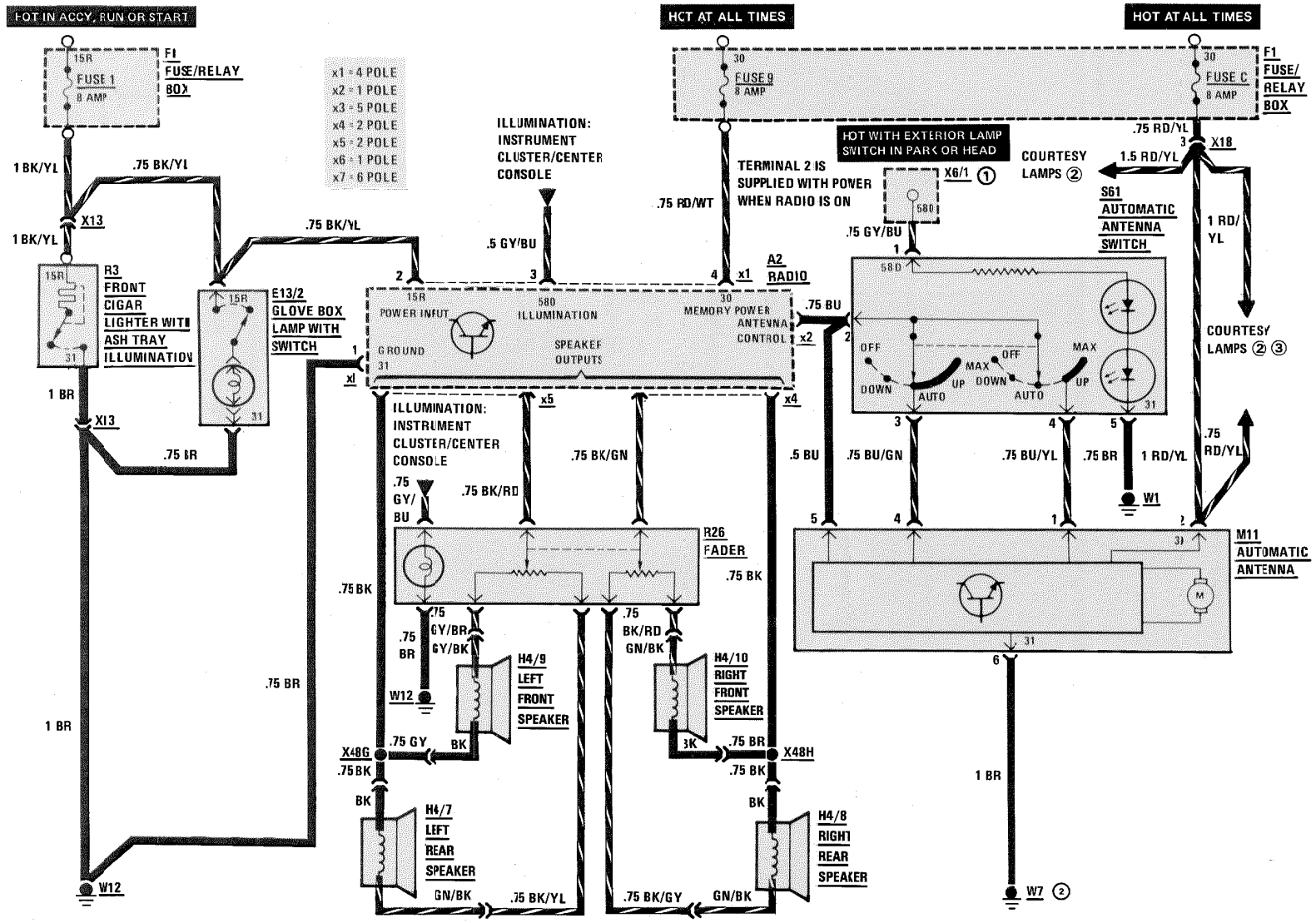

REVISIONS: ① X6 BEFORE JANUARY 1986, SEE PAGE 125
② MODEL 124.193 ONLY
③ MODEL 124.133 ONLY

GLOVE BOX LAMP/CIGAR LIGHTER/RADIO/AUTOMATIC ANTENNA

MY 1990

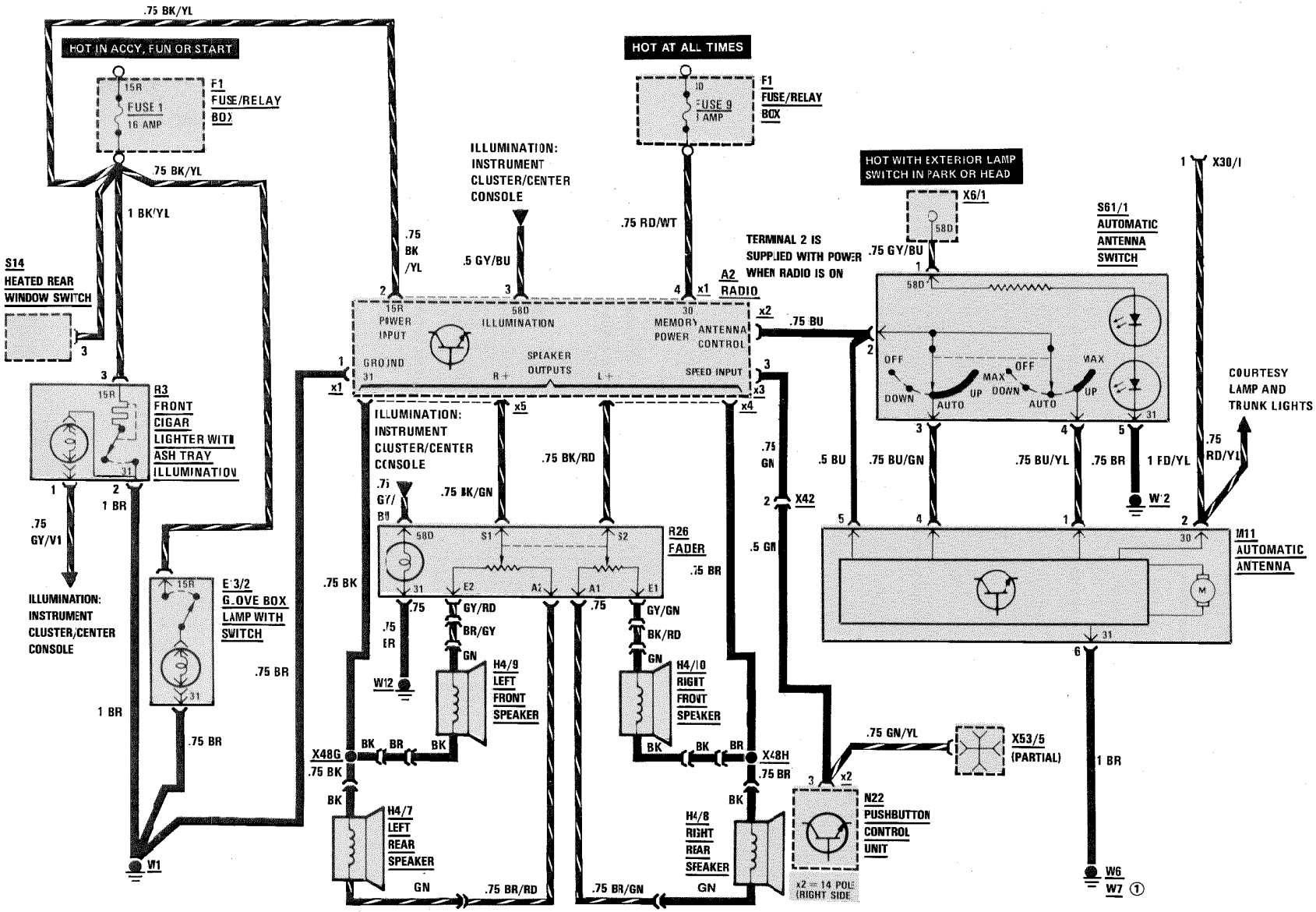

REVISIONS: ① STATION WAGON ONLY

RADIO WITH ACTIVE BASS SYSTEM/ AUTOMATIC ANTENNA

MY 1990

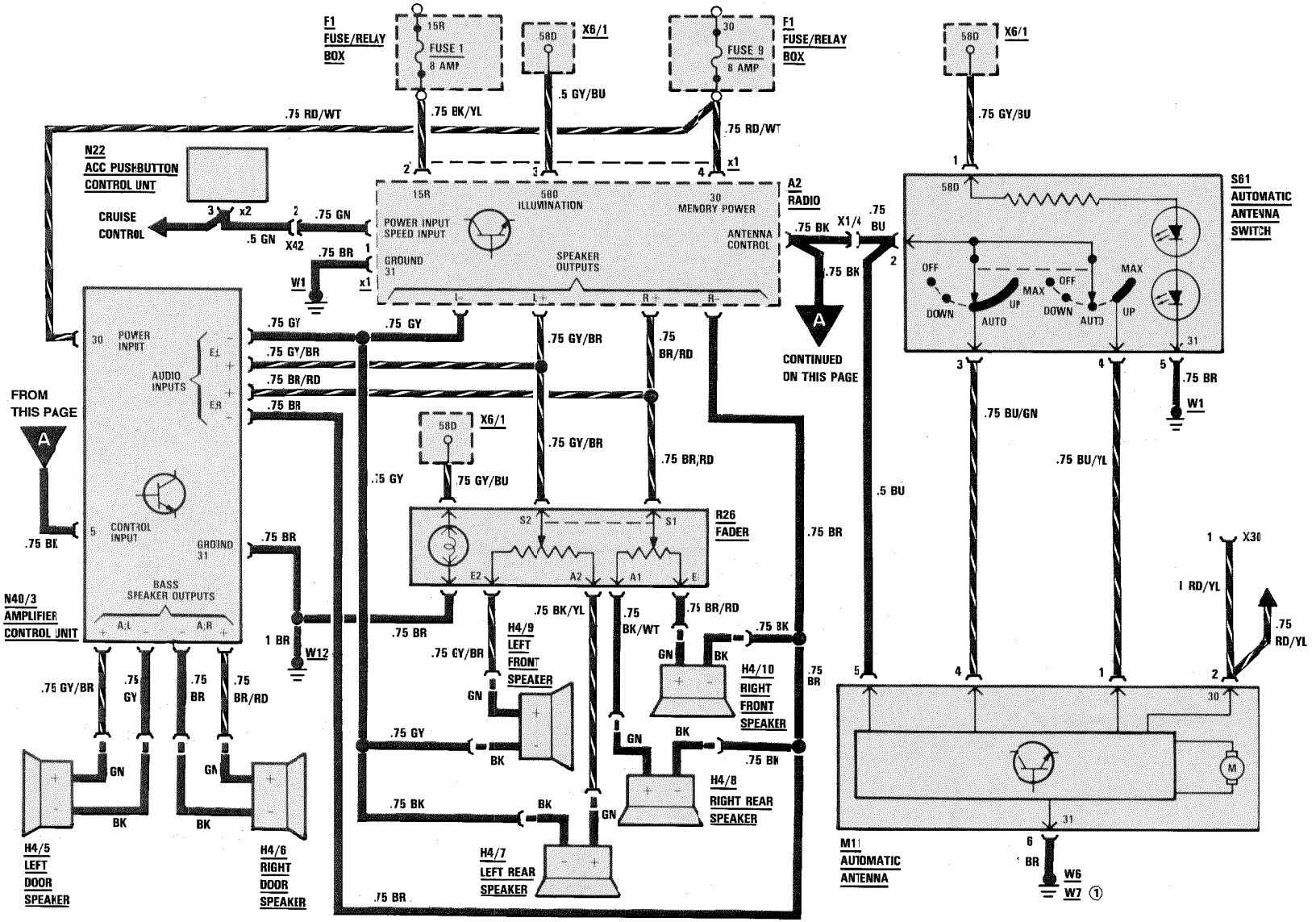

REVISIONS: ① STATION WAGON

RADIO WITH ACTIVE BASS/AUTOMATIC ANTENNA

AS OF MY 1990 (LATE PRODUCTION)

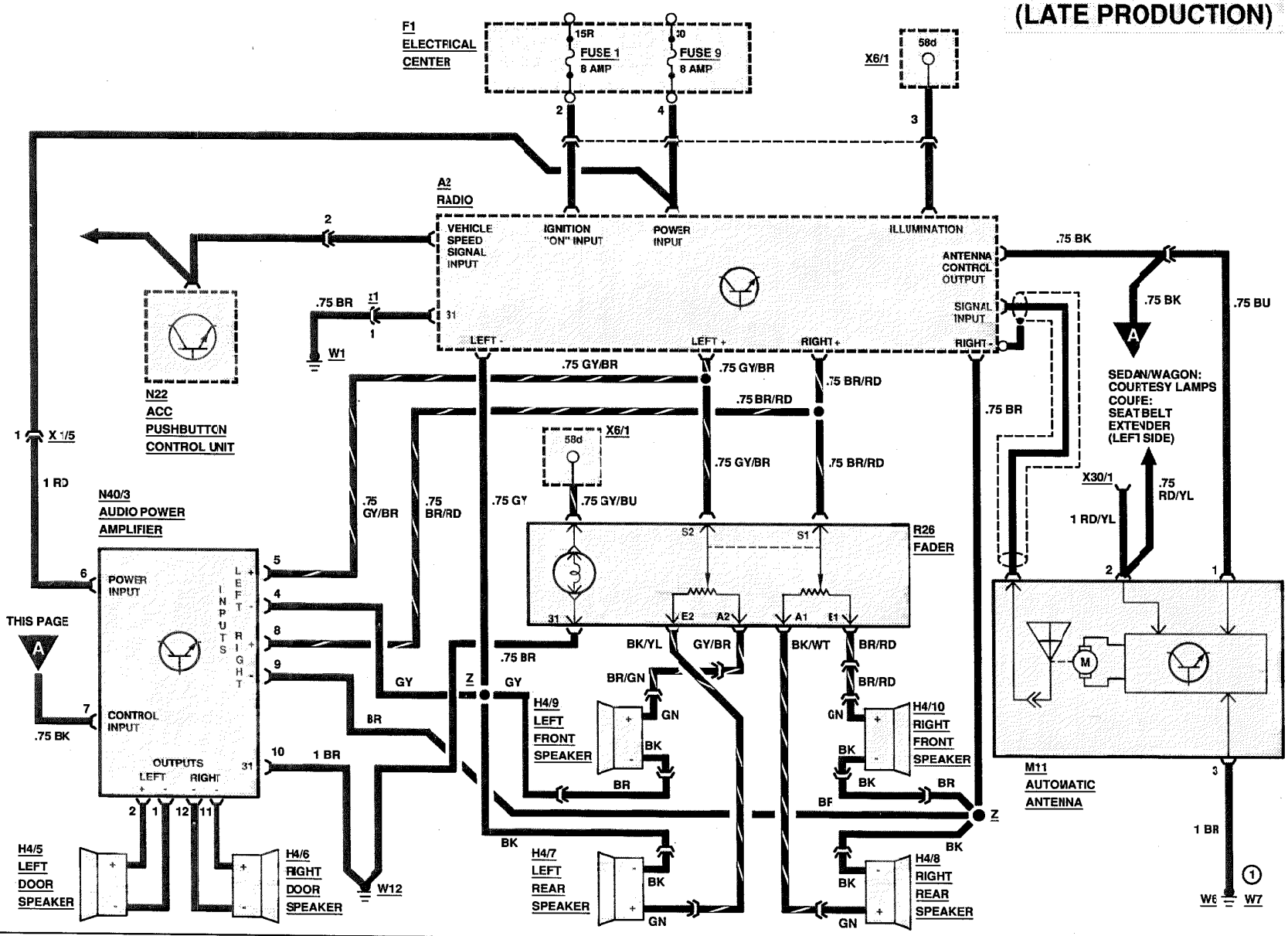

REVISIONS: (1) STATION WAGON ONLY

RADIO WITH SOUND SYSTEM / AUTOMATIC ANTENNA

AS OF MY 1990
(LATE PRODUCTION)

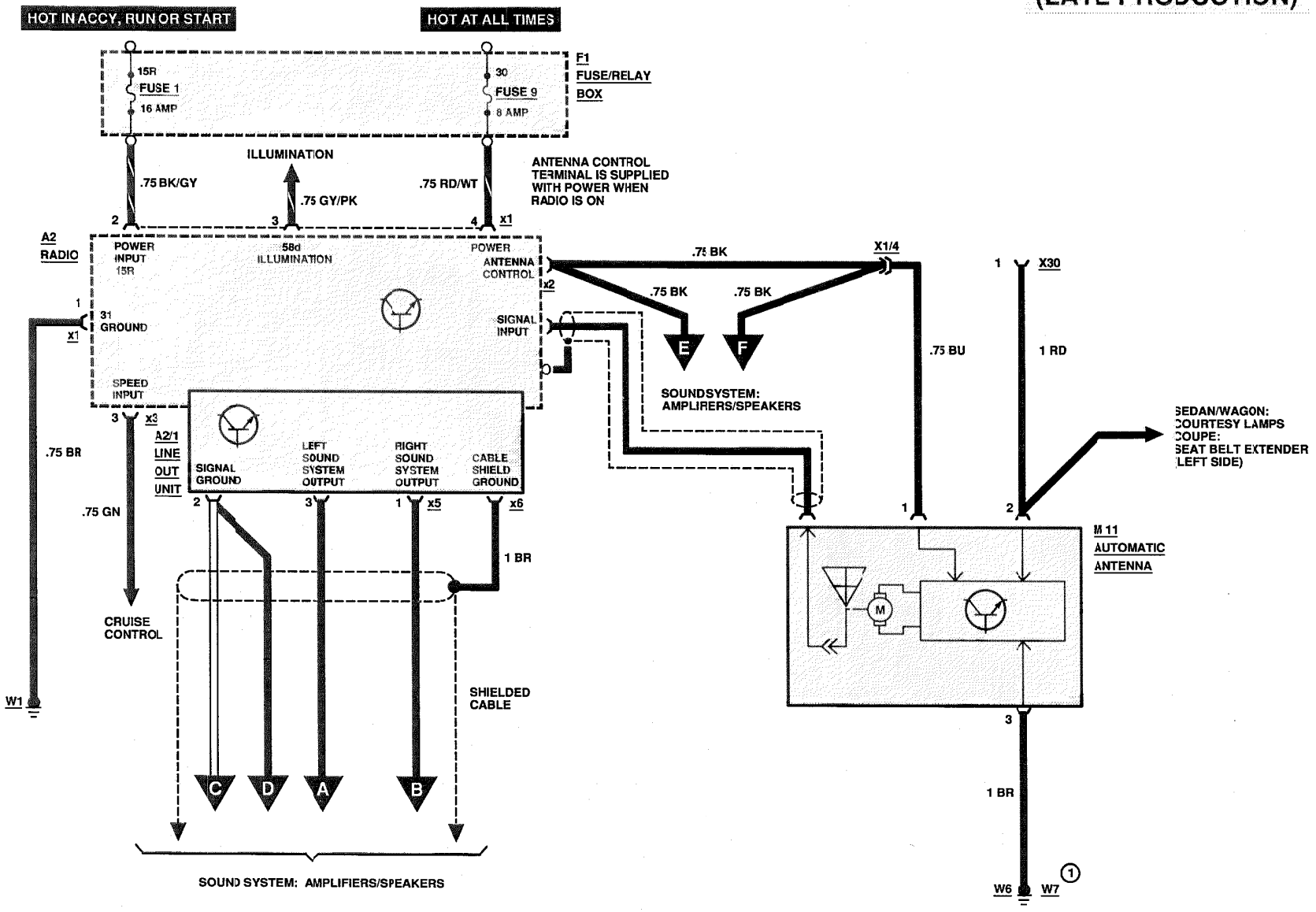

REVISIONS: (1) STATION WAGON

TWO PIECE RADIO WITH SOUND SYSTEM/ACTIVE BASS

MY 1990 (LATE PRODUCTION) TO MY 1991

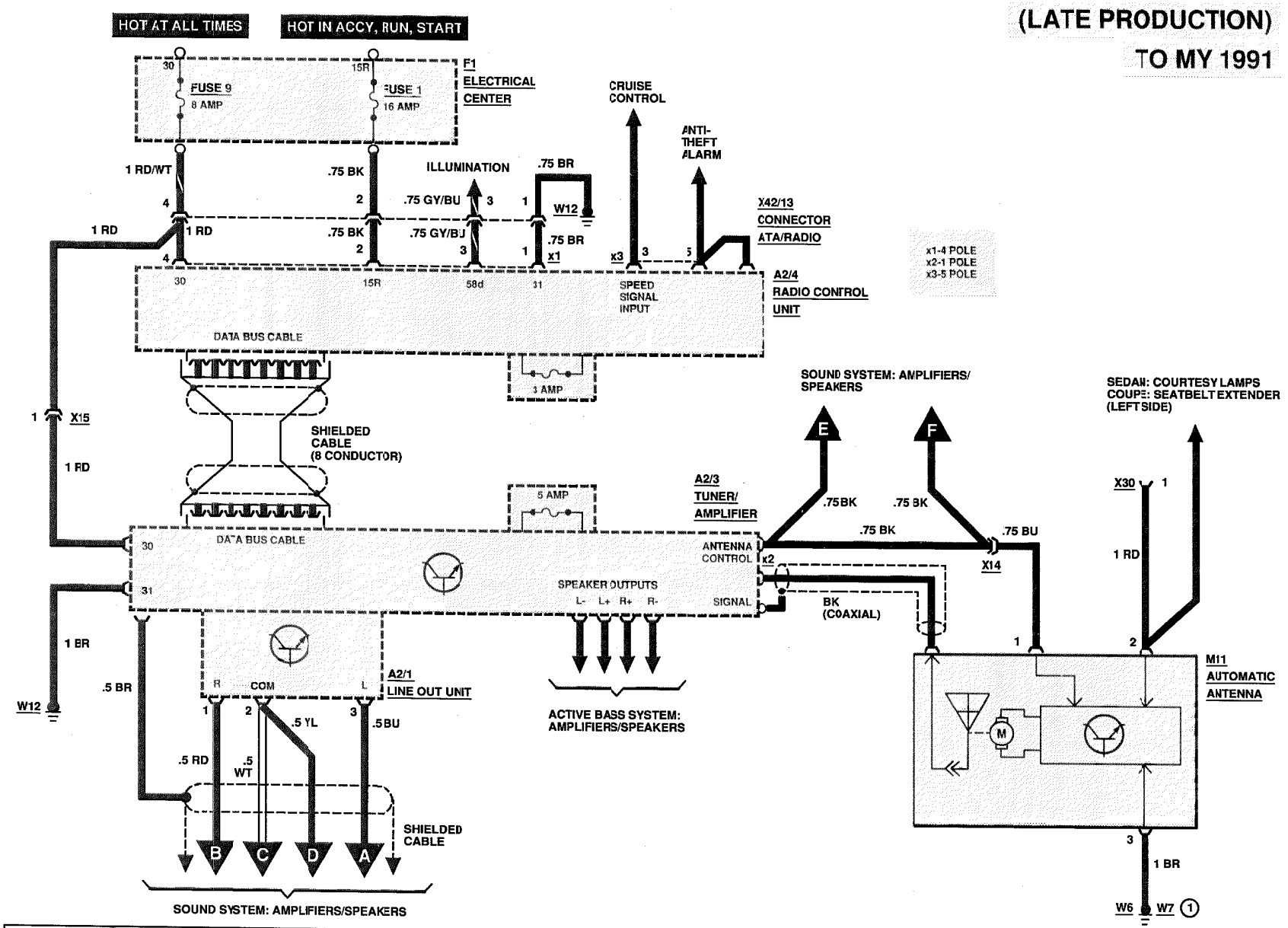

REVISIONS: ① STATION WAGON

TWO PIECE RADIO WITH SOUND SYSTEM/ACTIVE BASS

AS OF MY 1992

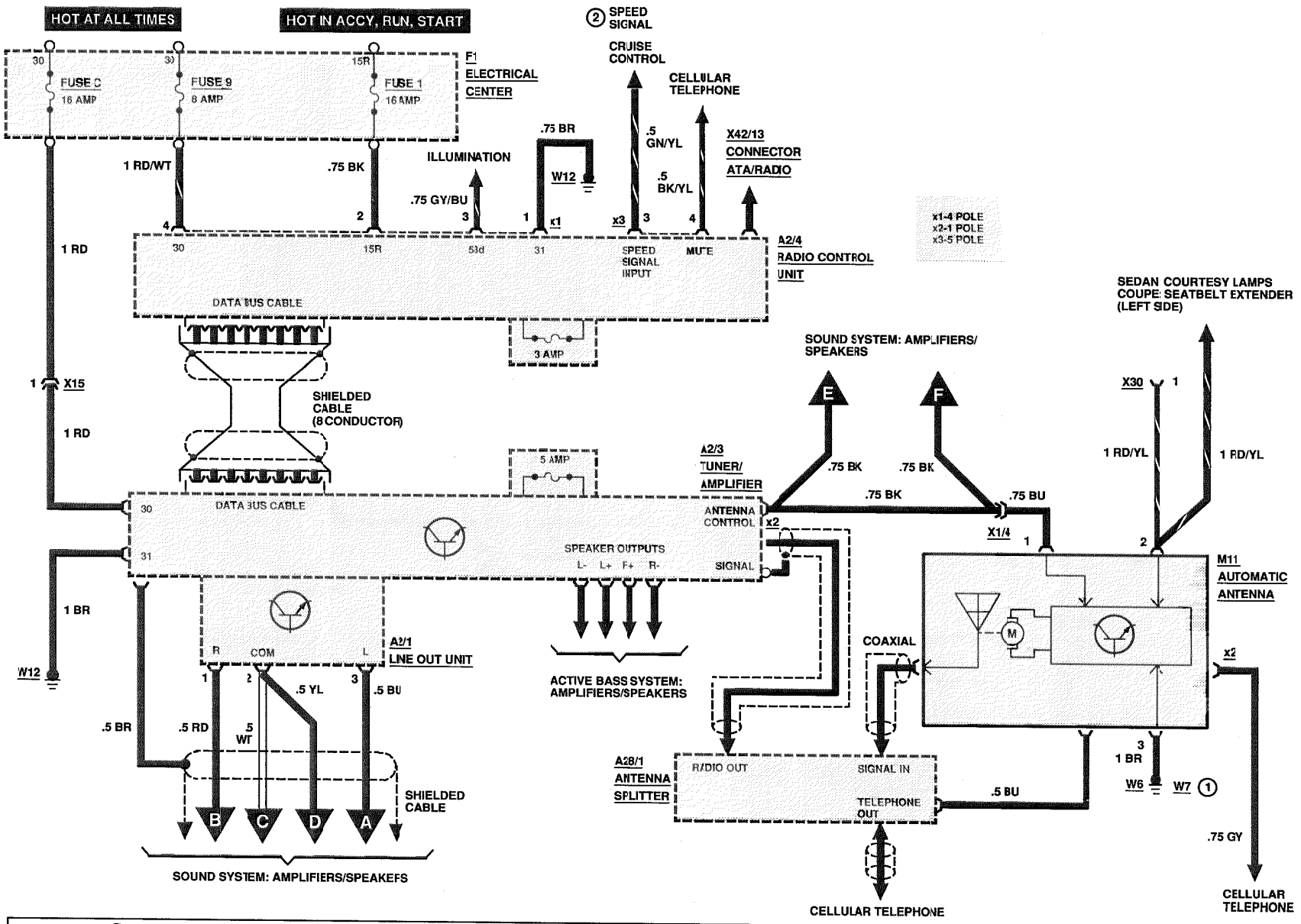

REVISIONS: ① STATION WAGON
② MODELS 400E/500E

TWO PIECE RADIO WITH CD PLAYER

MY 1990 (LATE PRODUCTION) TO MY 1991

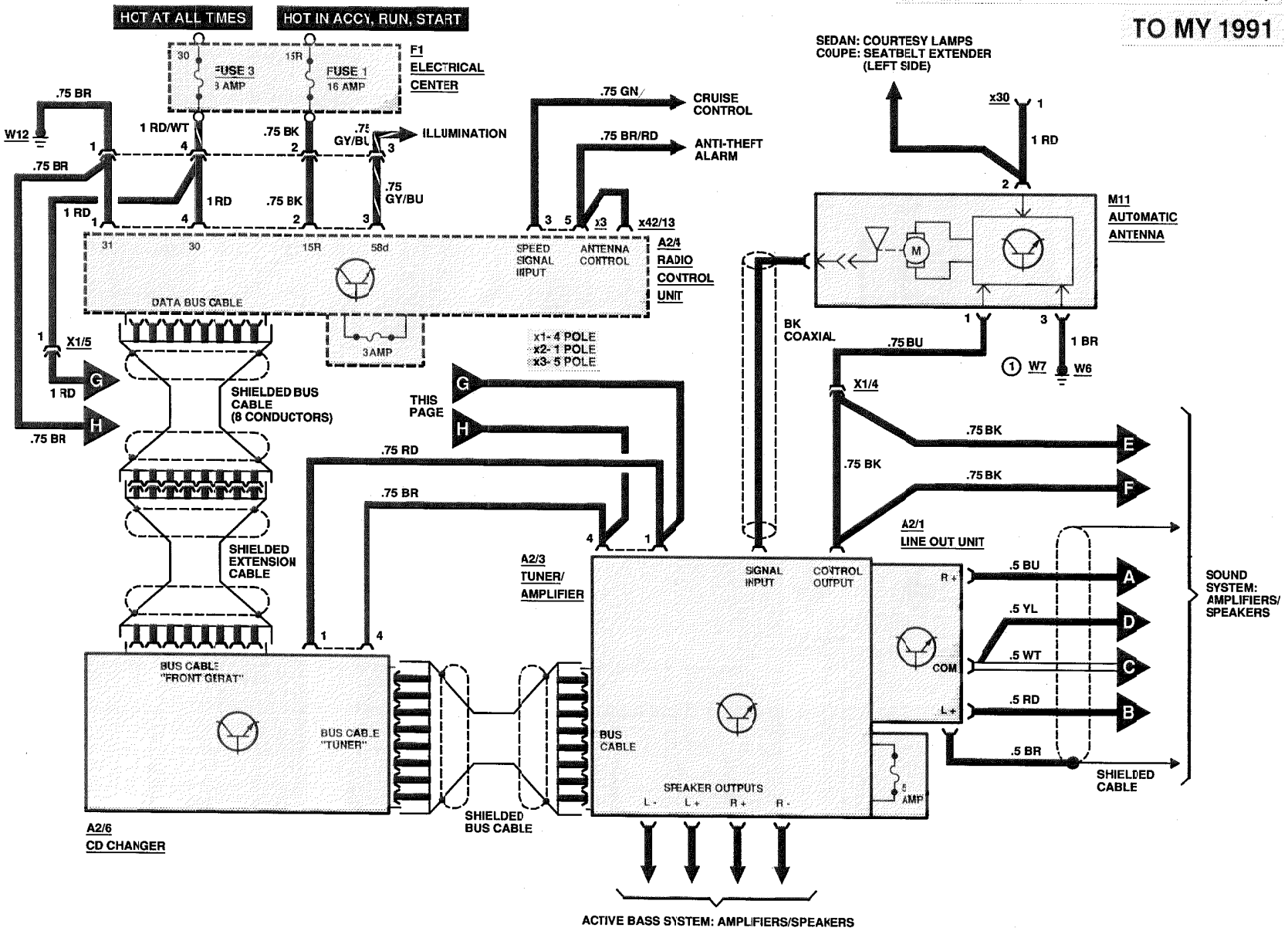

REVISIONS: (1) STATION WAGON

TWO PIECE RADIO WITH CD PLAYER

AS OF MY 1992

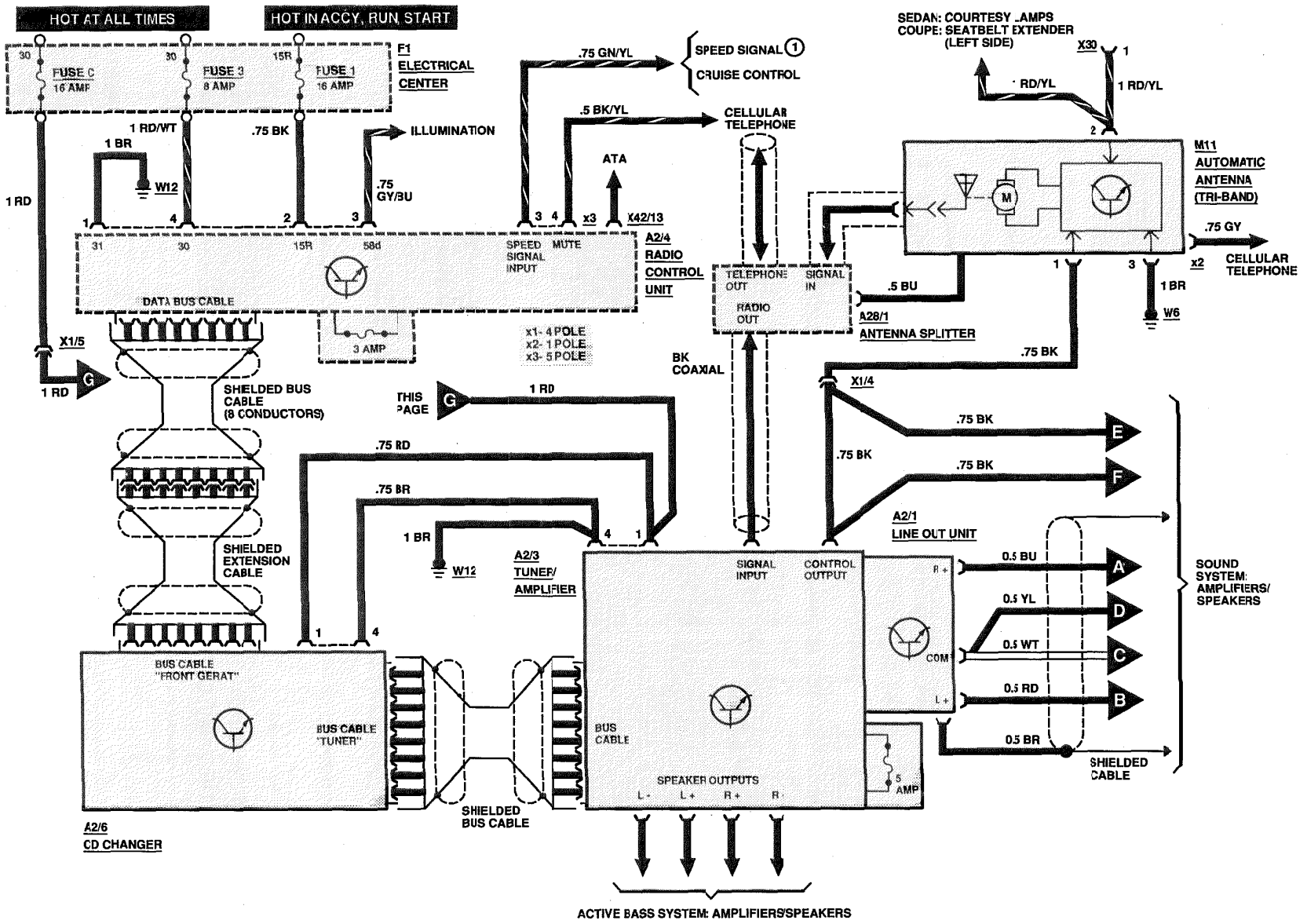

REVISIONS: (1) MODELS 400E/500E

ACTIVE BASS SYSTEM: AMPLIFIERS/SPEAKERS

MY 1990
(LATE PRODUCTION)
TO MY 1991

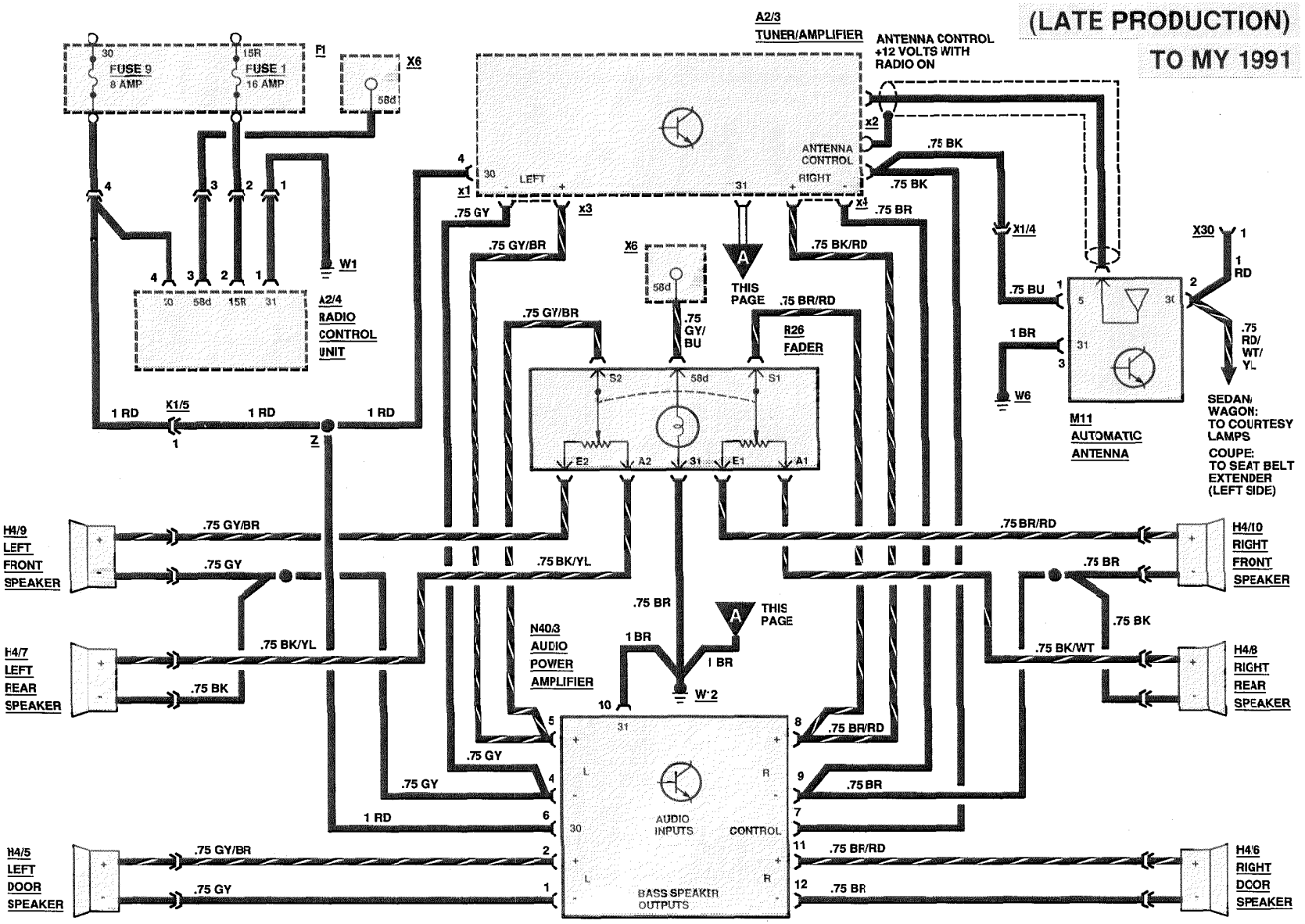

REVISIONS:

ACTIVE BASS SYSTEM: AMPLIFIERS/SPEAKERS

AS OF MY 1992

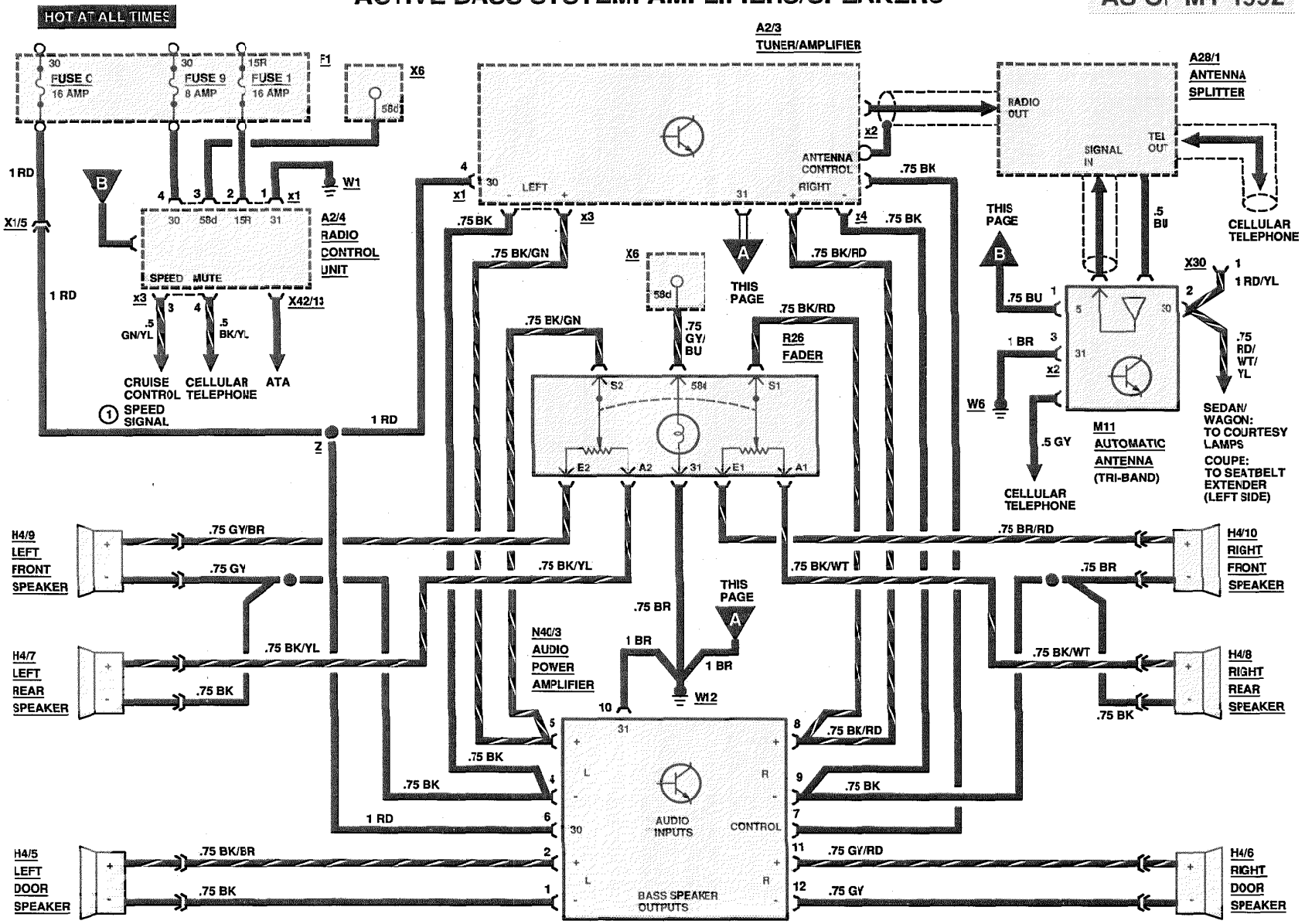

REVISIONS: (1) MODELS 400E/500E

SOUND SYSTEM: AMPLIFIERS/SPEAKERS

MY 1990 (LATE PRODUCTION) TO MY 1991

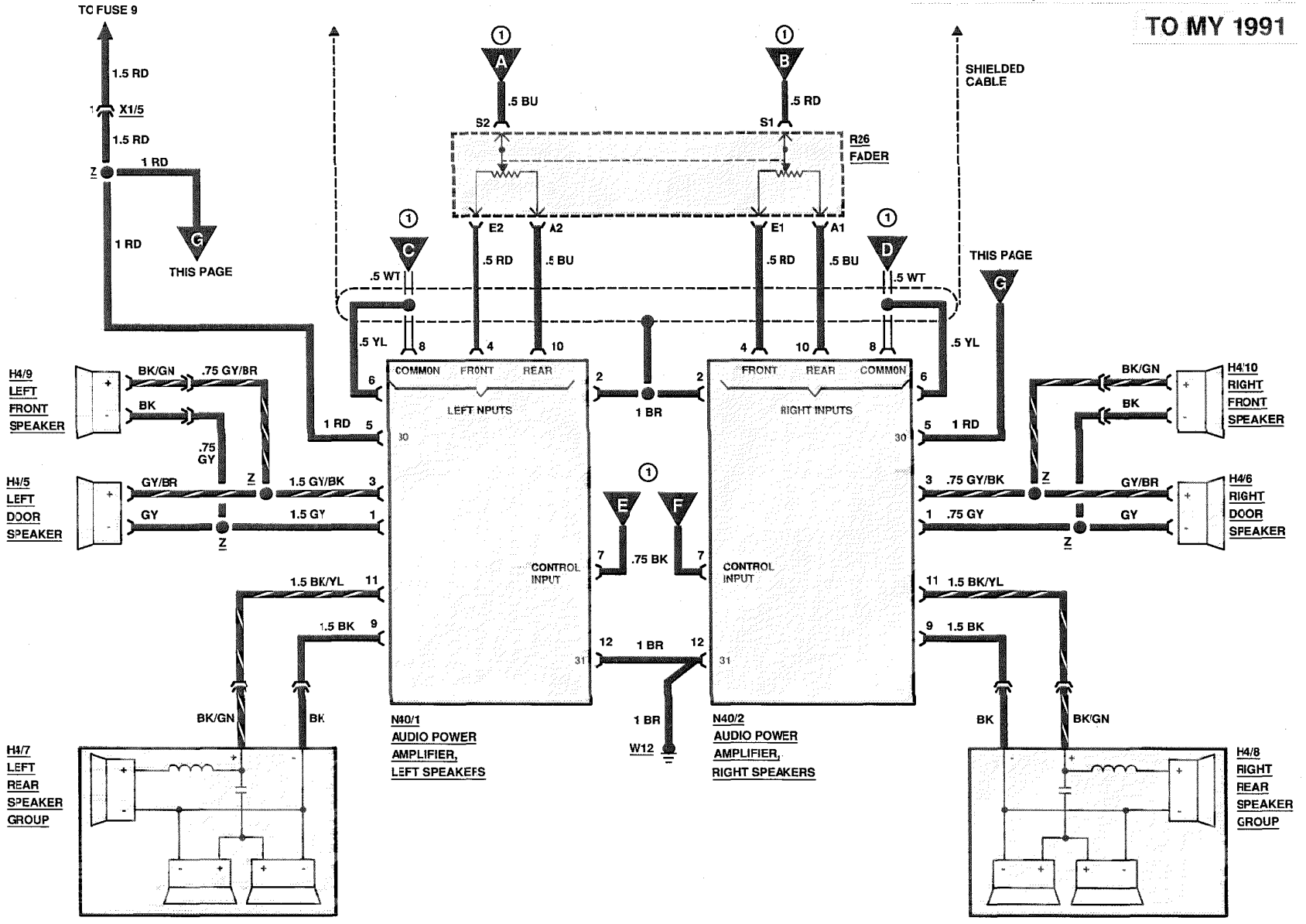

REVISIONS: (1) FROM LINE-OUT UNIT (A2/1)

SOUND SYSTEM: AMPLIFIERS/SPEAKERS

AS OF MY 1992

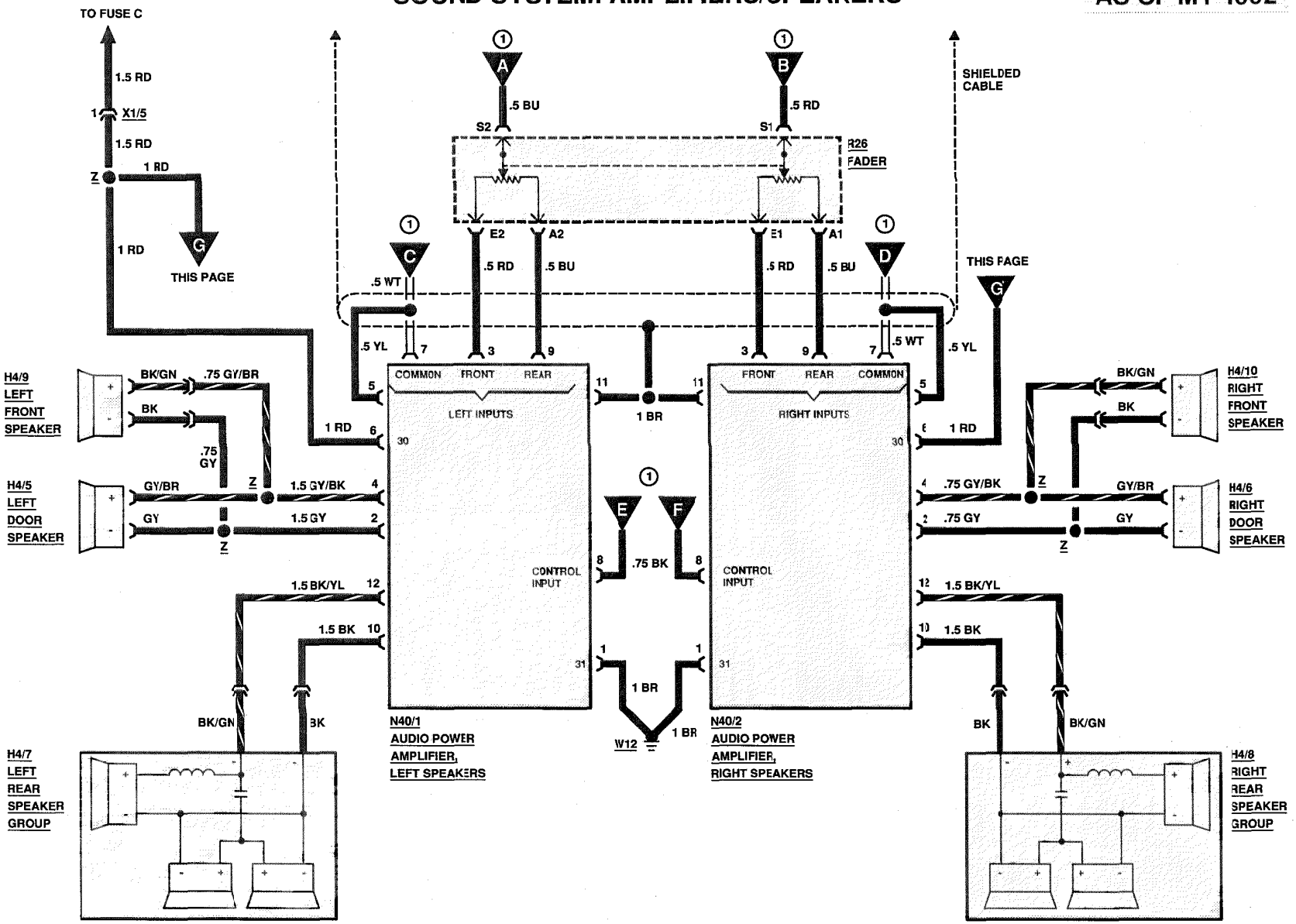

REVISIONS: (1) FRCM LINE-OUT UNIT (A2/1)

CELLULAR TELEPHONE

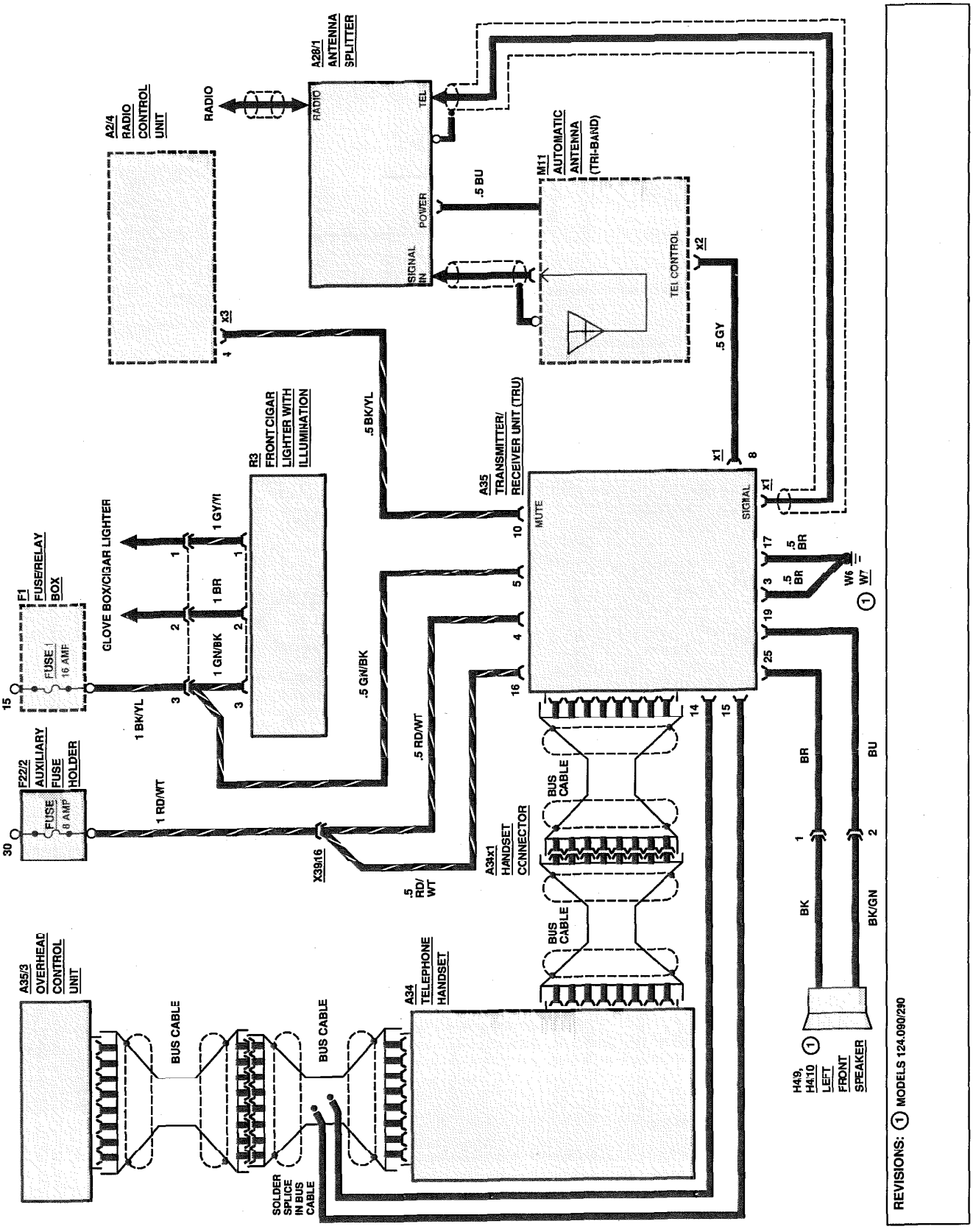

WARNING SYSTEM

MY 1986
300 E

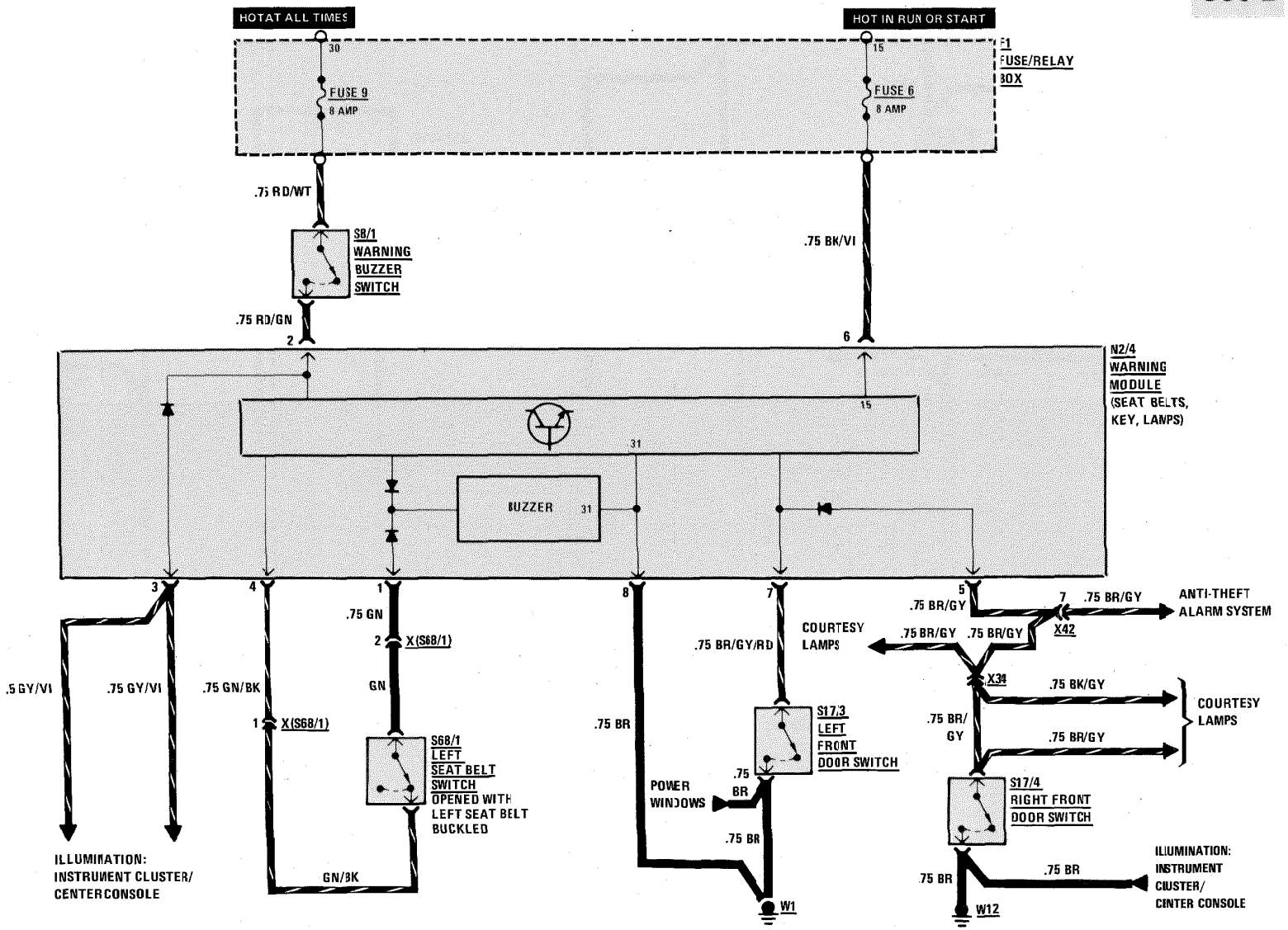

REVISIONS:

WARNING SYSTEM

MY 1987-1989

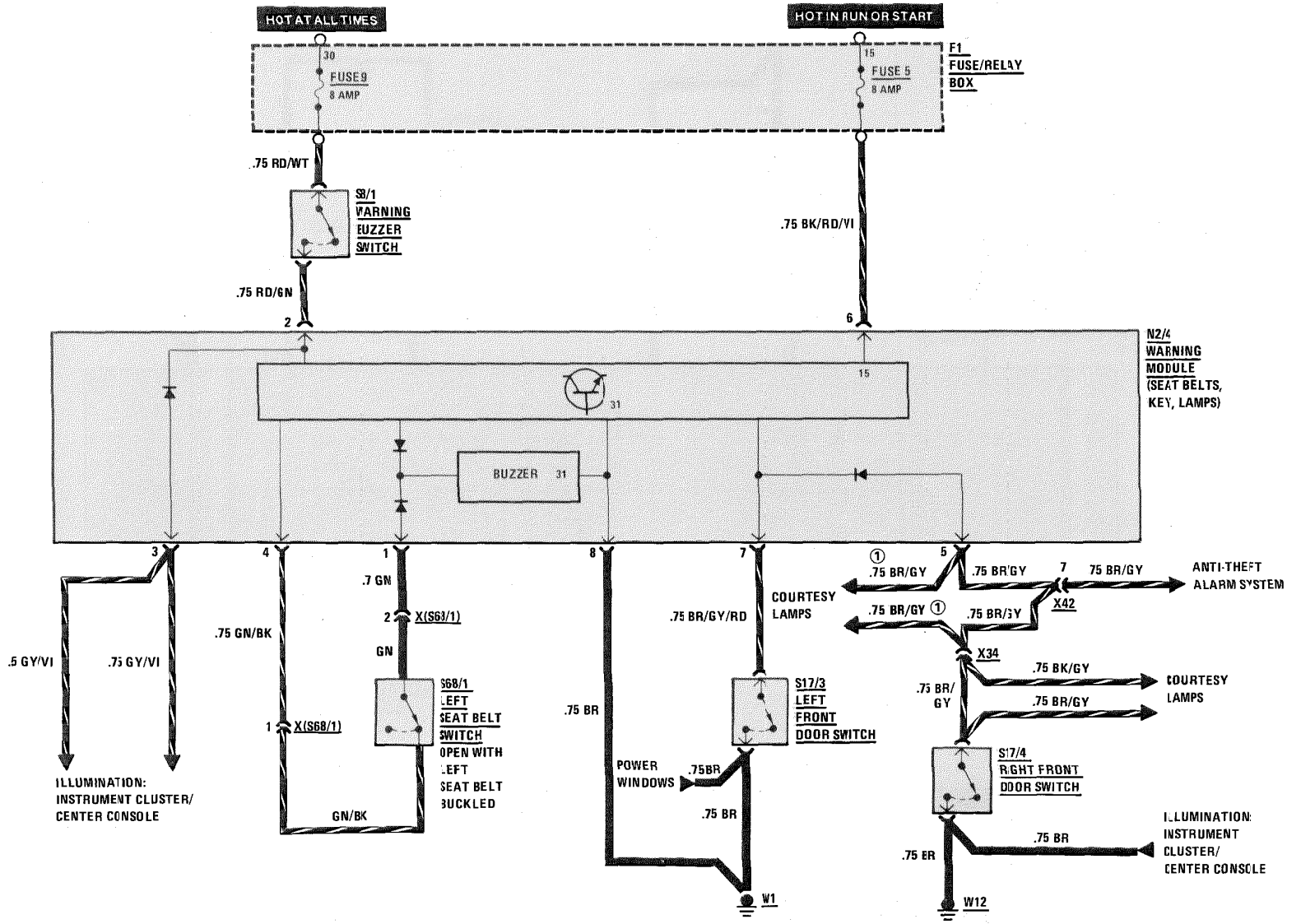

REVISIONS: ① STATION WAGON: CONNECTED TO X34
SEDAN: CONNECTED TO N2/4 PIN 5

WARNING SYSTEM

MY 1988-1989
300 CE

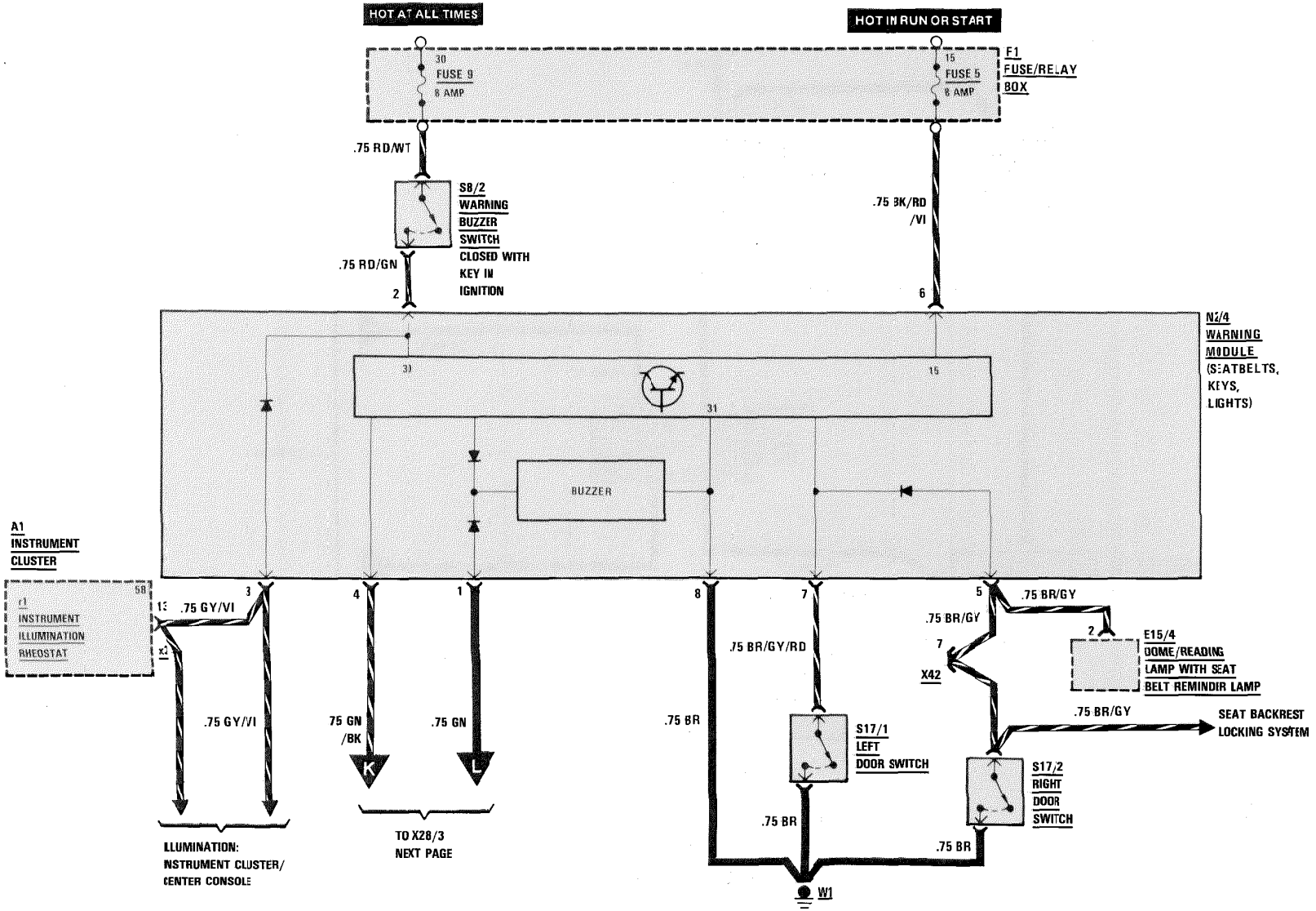

REVISIONS:

WARNING SYSTEM

AS OF MY 1988

300 CE

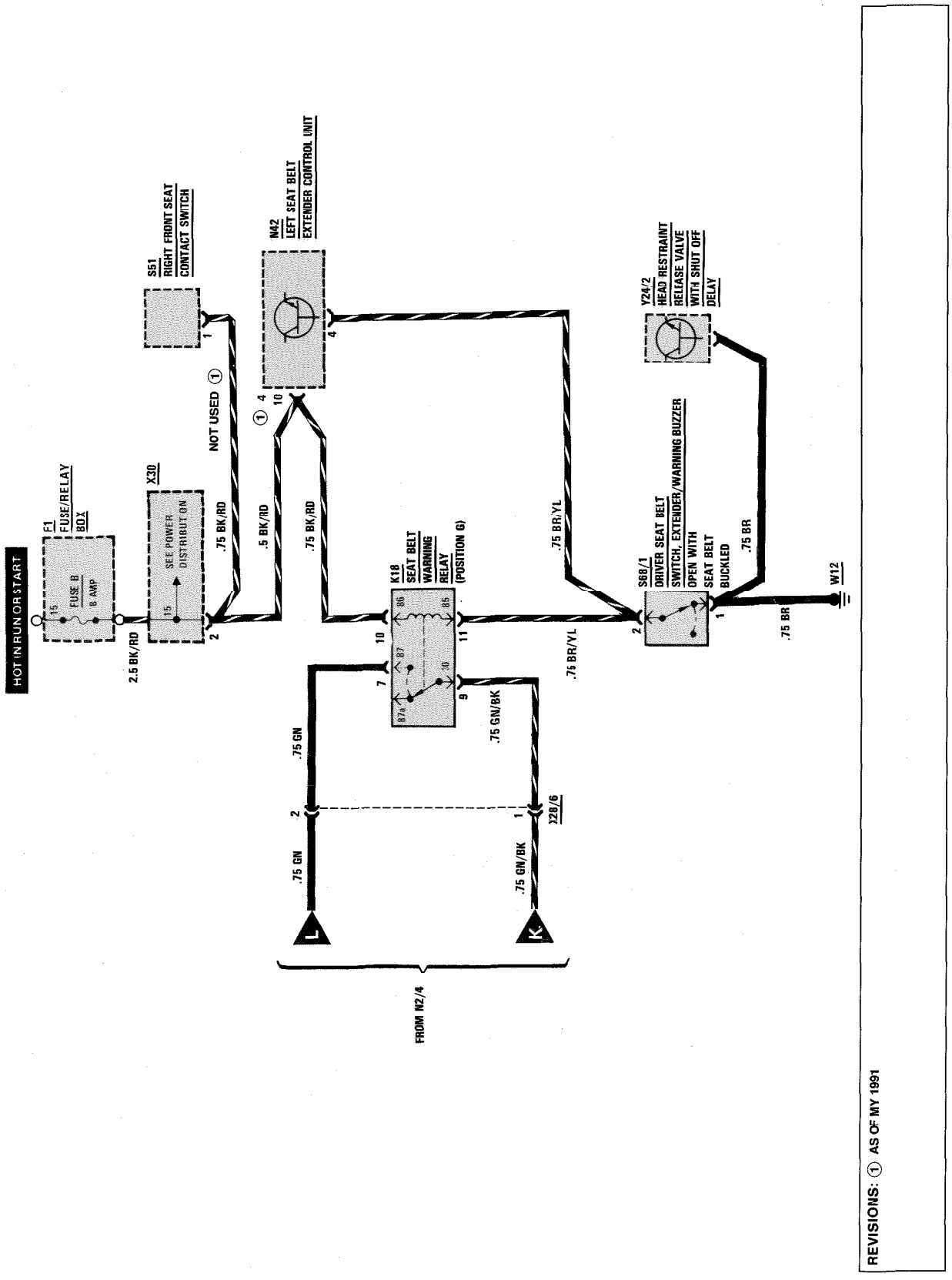

AS OF MY 1990

WARNING SYSTEM

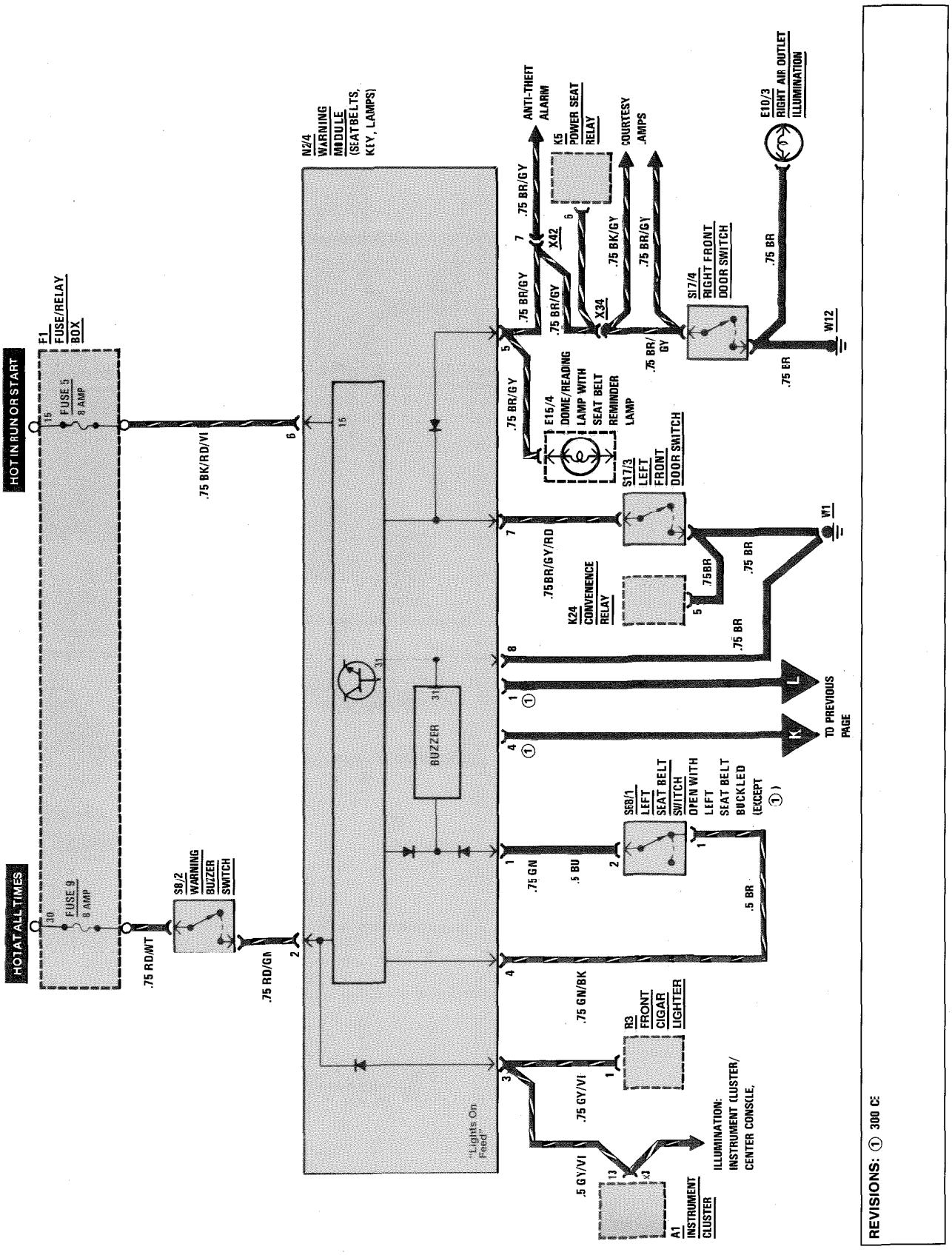

WARNING INDICATORS/GAUGES/CLOCK/TACHOMETER

AS OF MY 1986

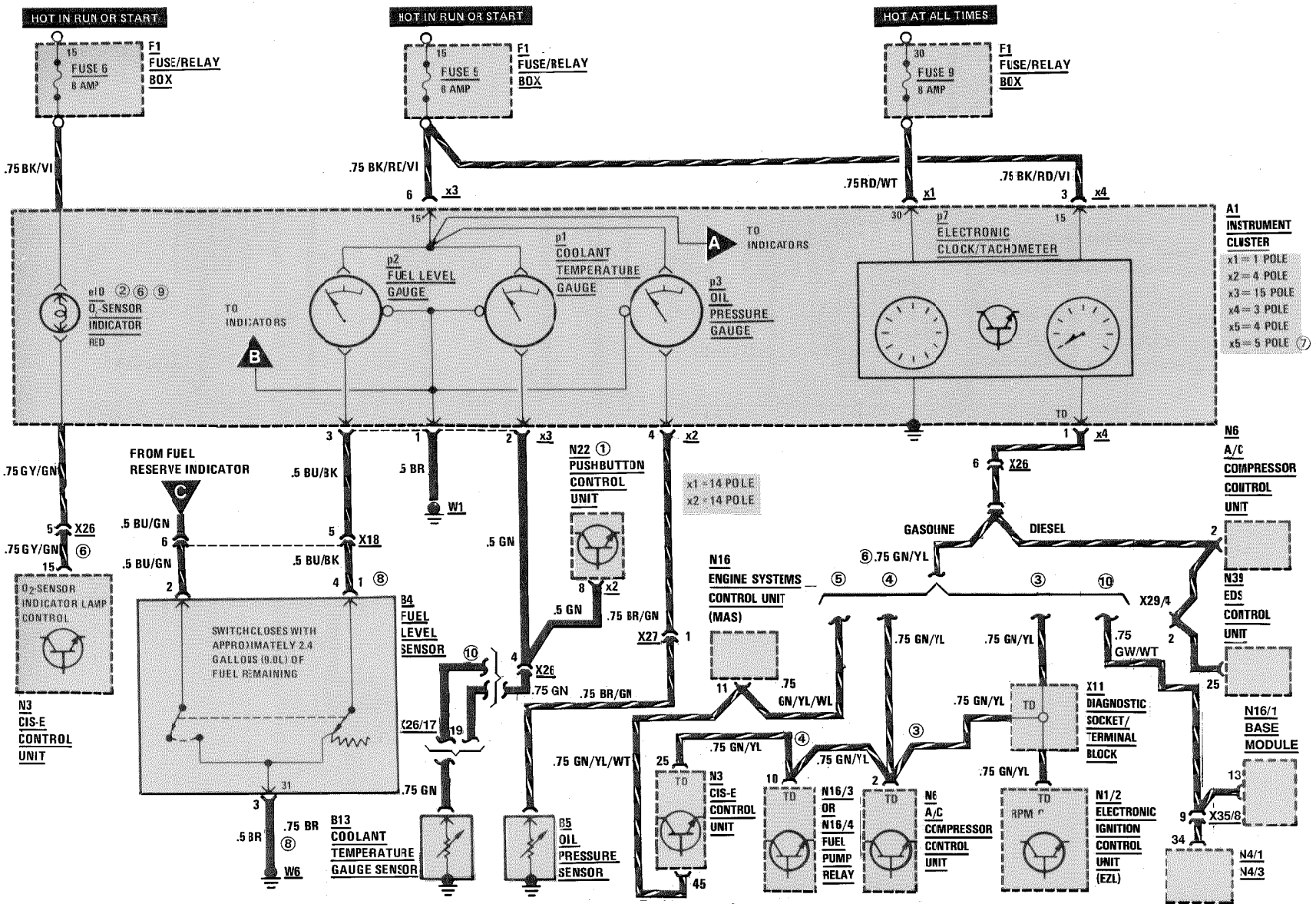

REVISIONS:
① MY 1986 AND MY 1987 ONLY
② AS OF MY 1988 "CHECK ENGINE" INDICATOR
③ MY 1986-1988
④ MY 1989
⑤ AS OF MY 1990
⑥ NOT USED IN DIESELS
⑦ AS OF MY 1988
⑧ STATION WAGONONLY, AS OF MY 1990
⑨ AS OF MY 1992, CALIFORNIA ONLY (CHECK ENGINE)
⑩ MODELS 400E/500E

WARNING INDICATORS/GAUGES

AS OF MY 1986

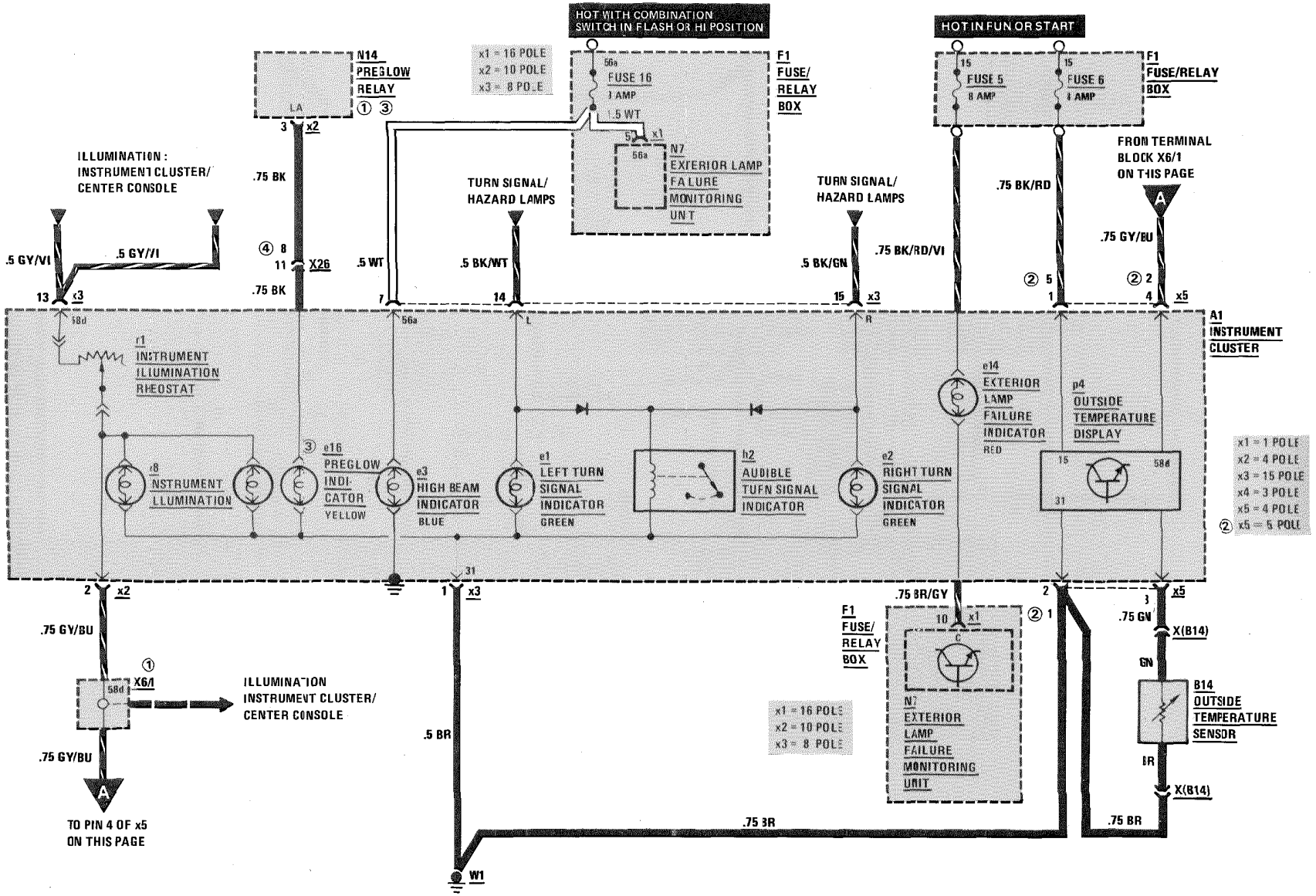

REVISIONS: ① X6 BEFORE JANUARY 1986 ② AS OF MY MODEL YEAR 1988 ③ DIESEL MODELS ONLY ④ AS OF MY 1990

WARNING INDICATORS

AS OF MY 1986

GASOLINE

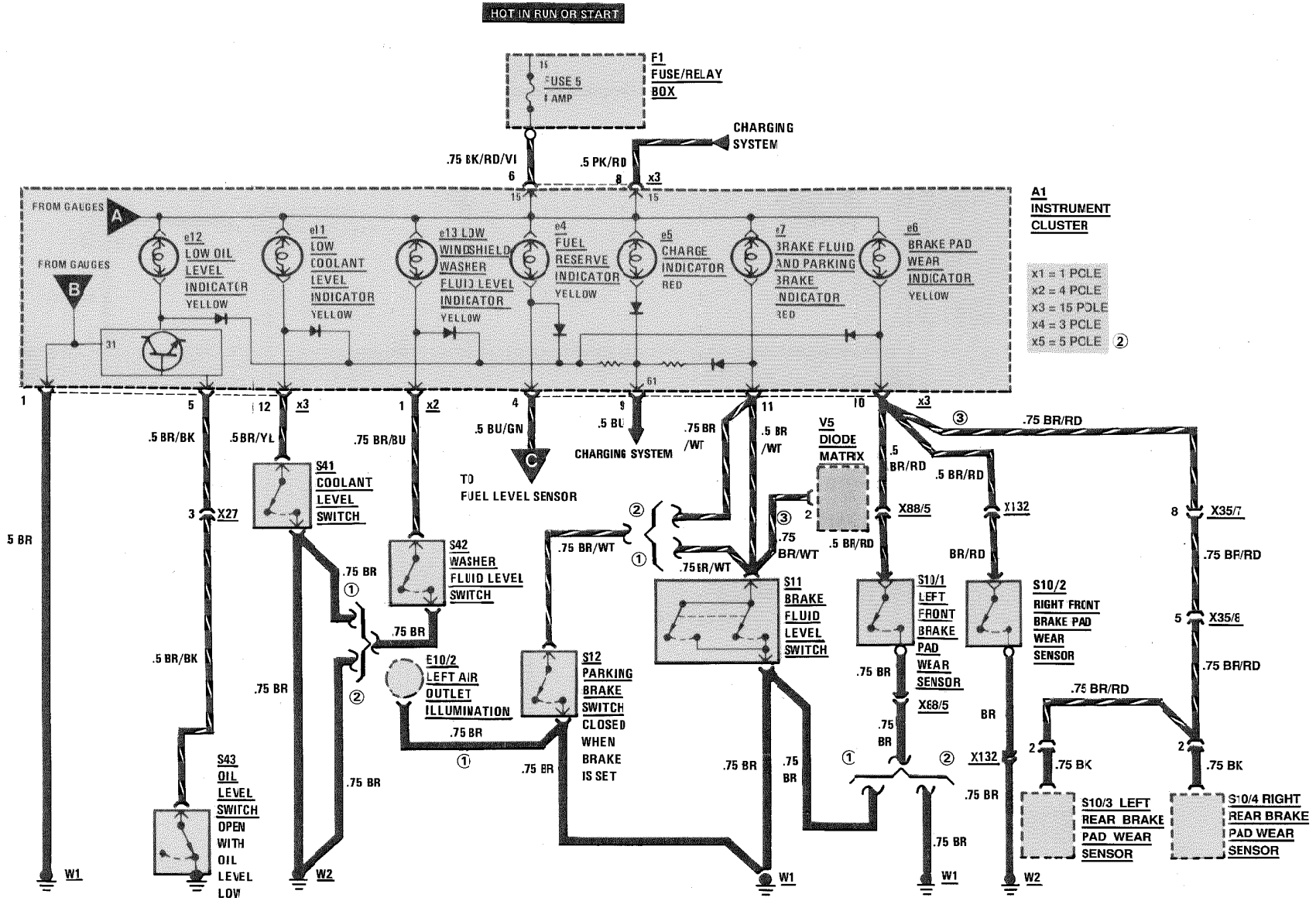

REVISIONS: ① MY 1986 AND MY 1987
② AS OF MY 1988
③ MODEL 500E

WARNING INDICATORS

MY 1986
DIESEL

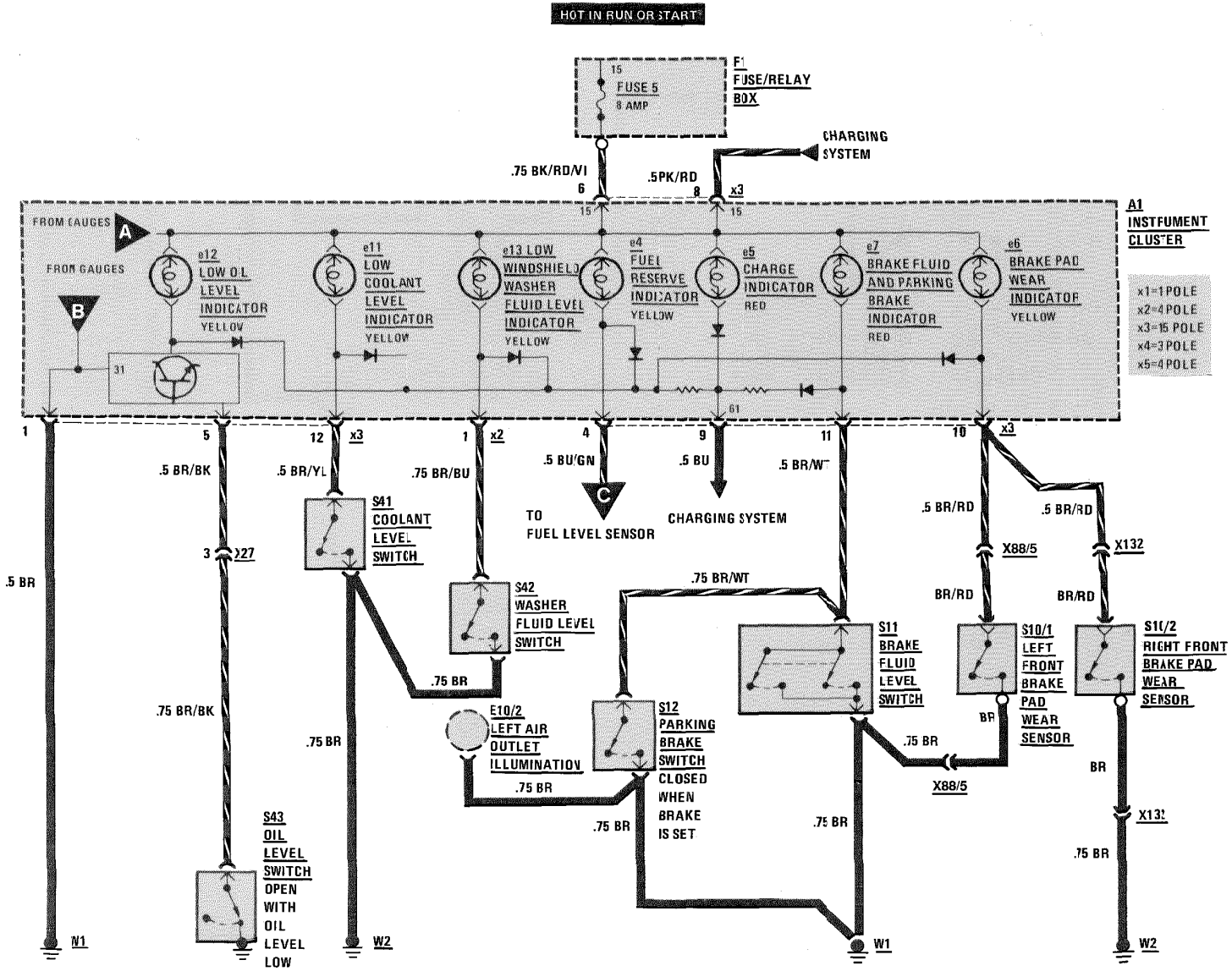

REVISIONS:

WARNING INDICATORS

MY 1987
DIESEL

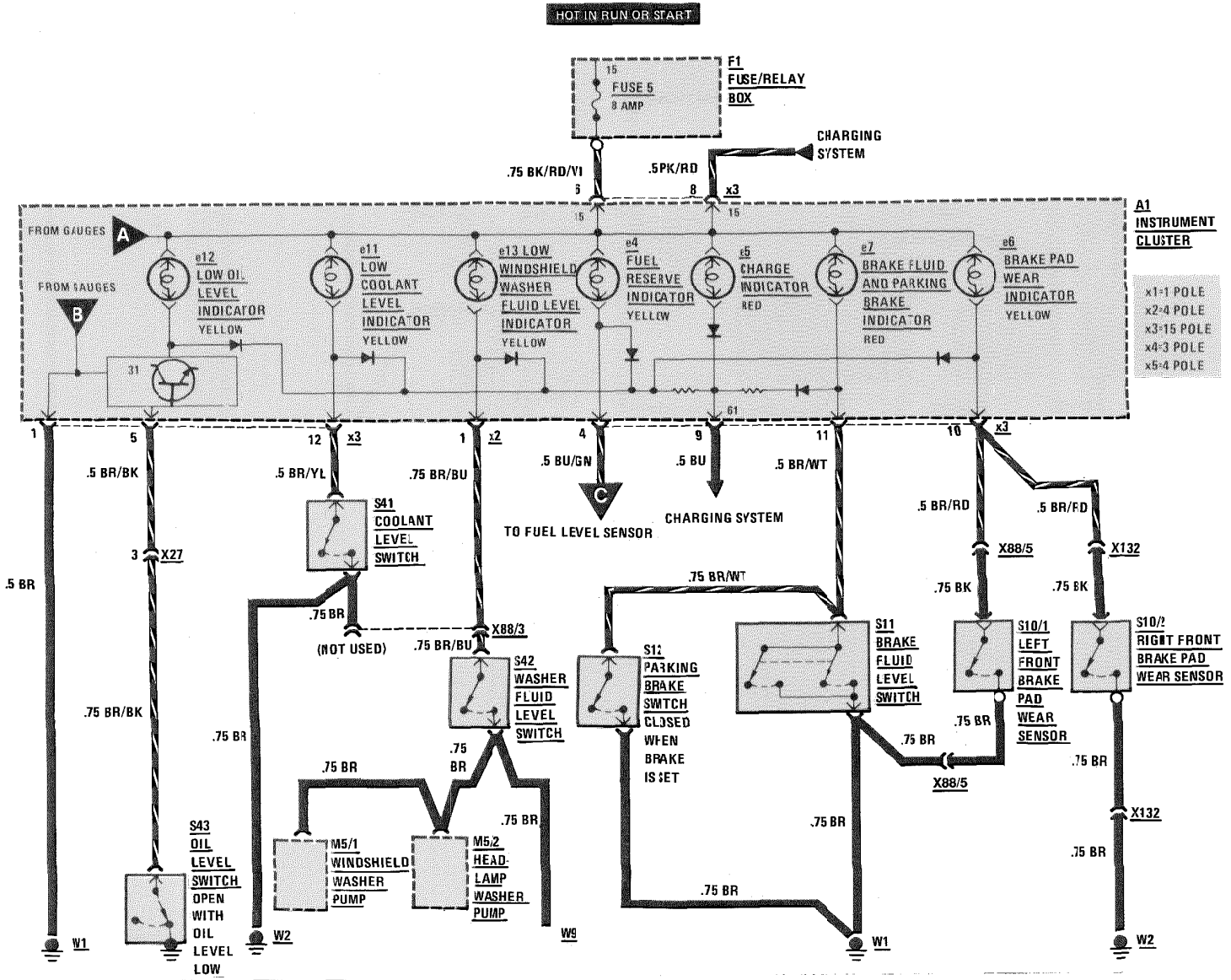

REVISIONS:

WARNING INDICATORS

AS OF MY 1990

DIESEL

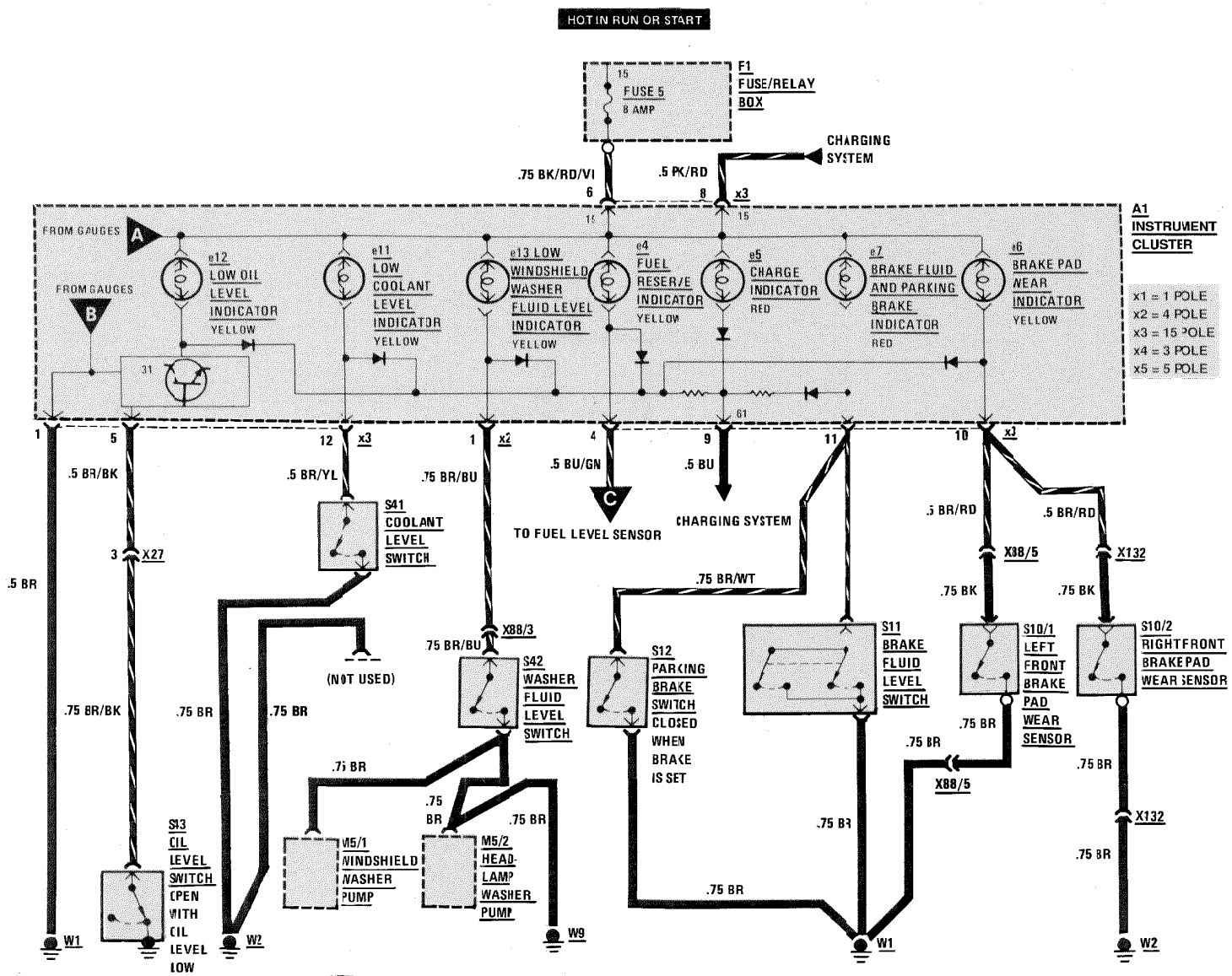

REVISIONS:

WARNING INDICATORS

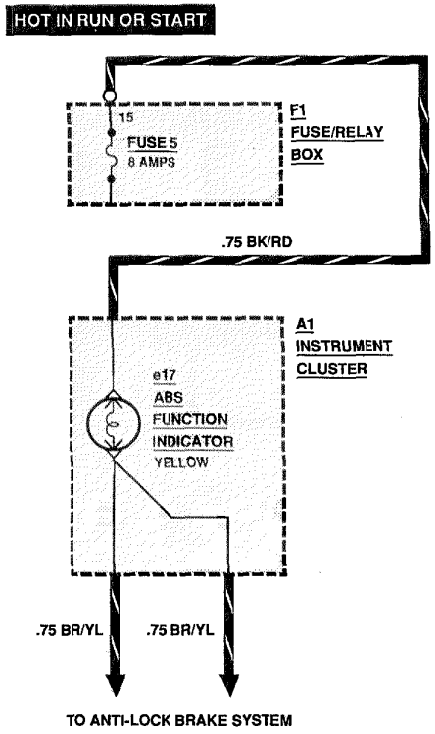

REVISIONS:

WARNING INDICATORS

AS OF MY 1991

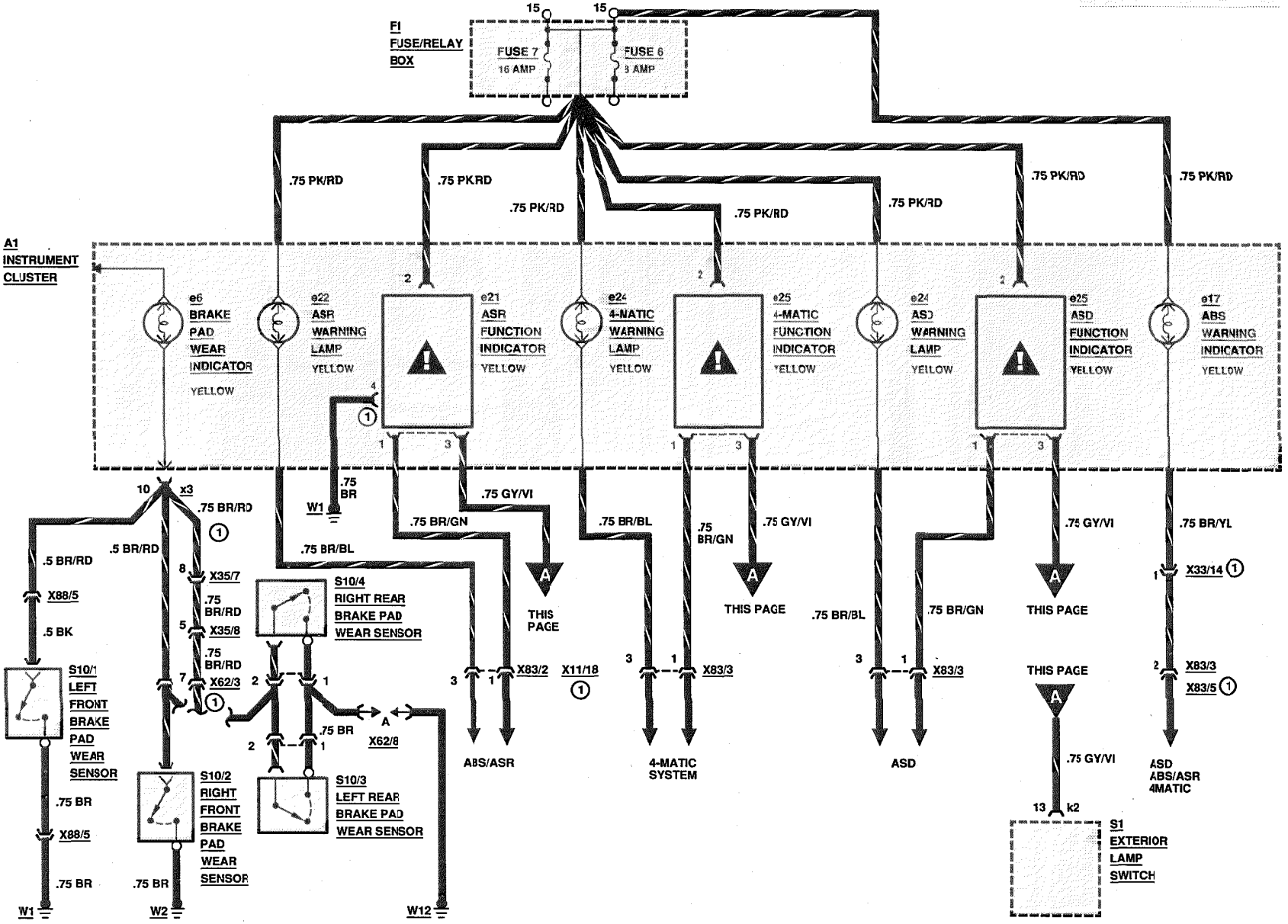

REVISIONS: ① MODELS 400E/500E

GAUGES/SPEED SIGNAL

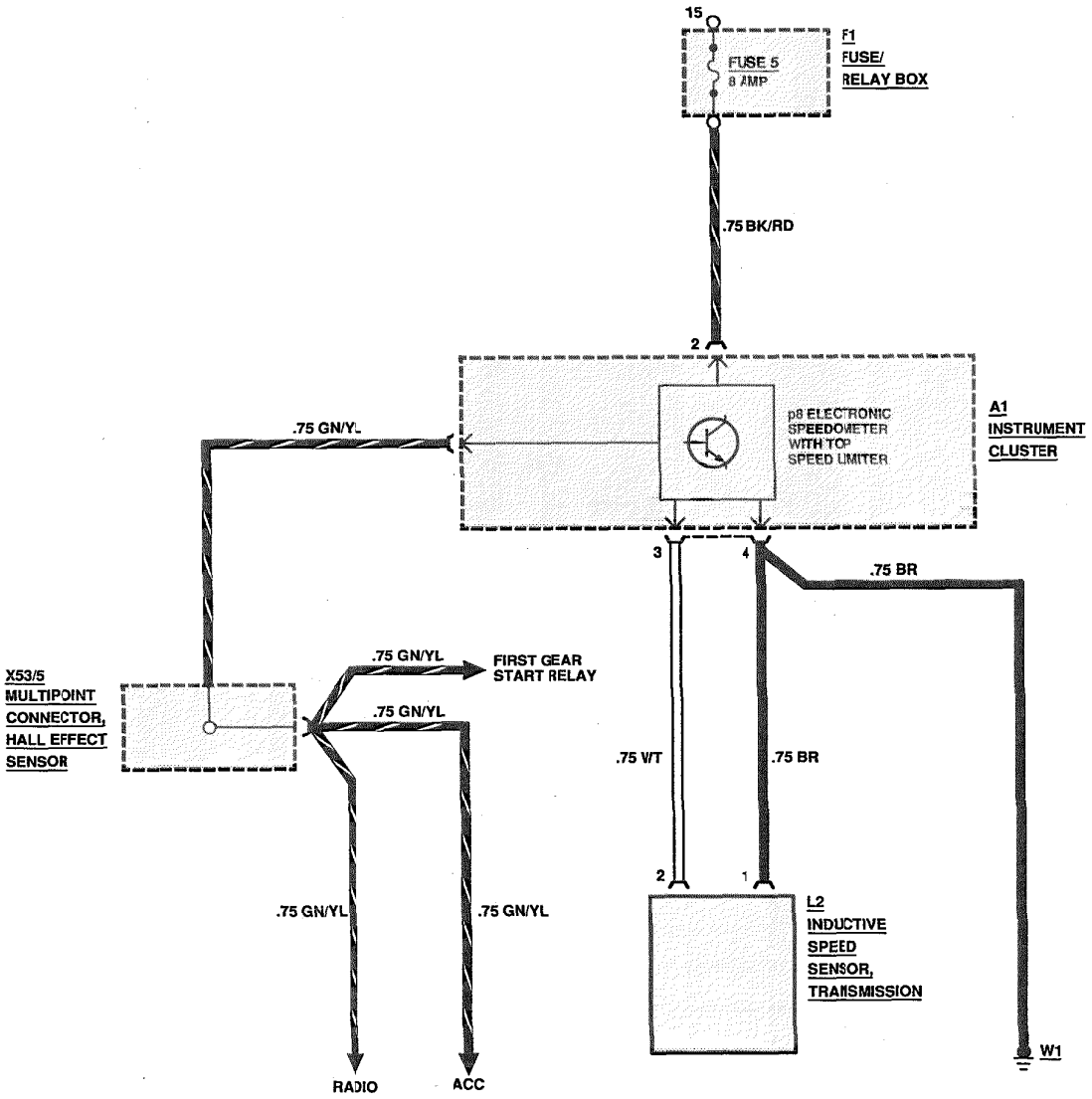

REVISIONS: (1) MODEL 400E

CRUISE CONTROL (WITH AUTOMATIC TRANSMISSION) ③

AS OF MY 1986
GASOLINE

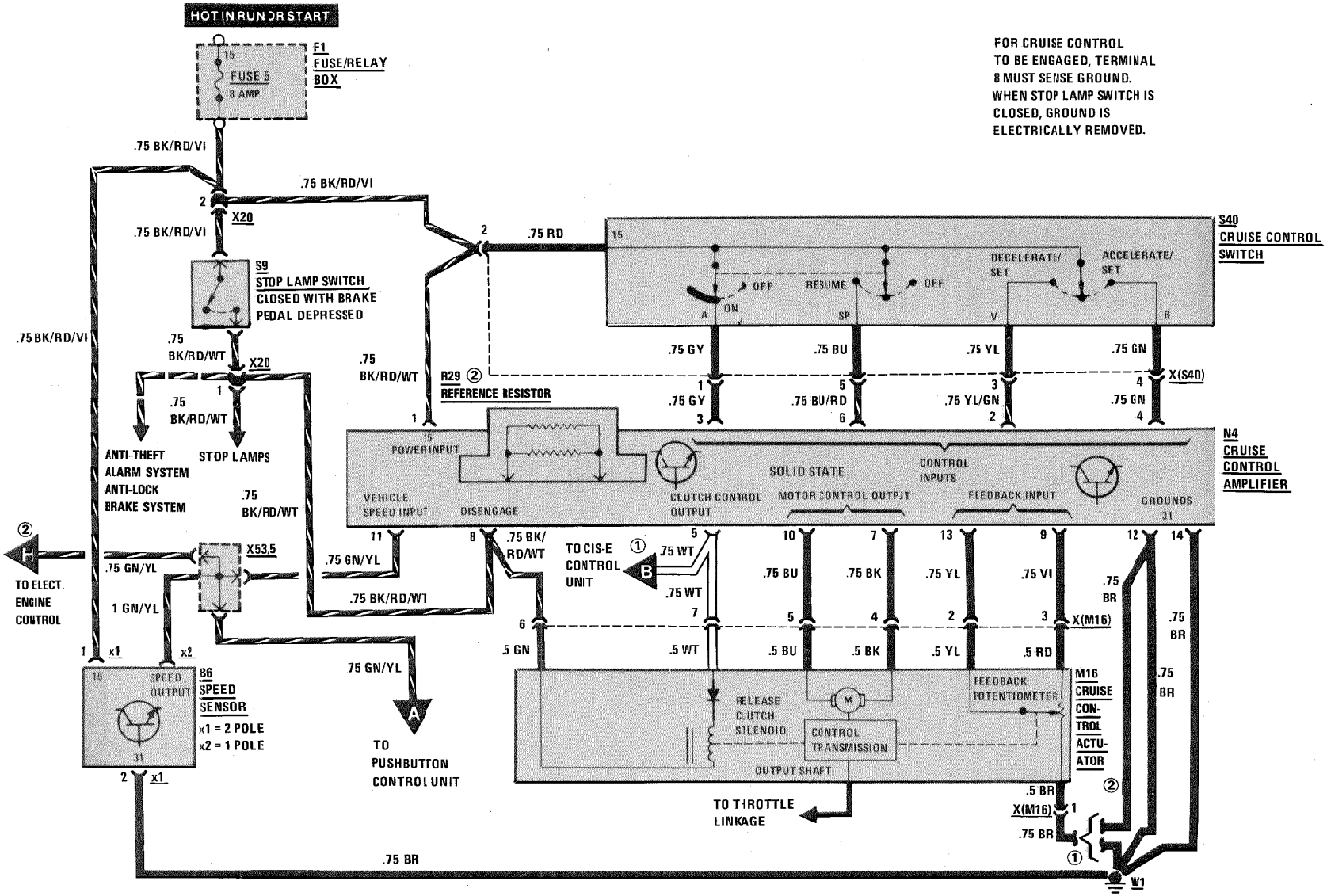

REVISIONS: ① MY 1986 AND MY 1987
② AS OF MY 1988
③ VEHICLES WITH ASR, SEE ELECTRONIC ACCELERATOR SYSTEM/CRUISE CONTROL

CRUISE CONTROL (WITH AUTOMATIC TRANSMISSION)

AS OF MY 1986
DIESEL

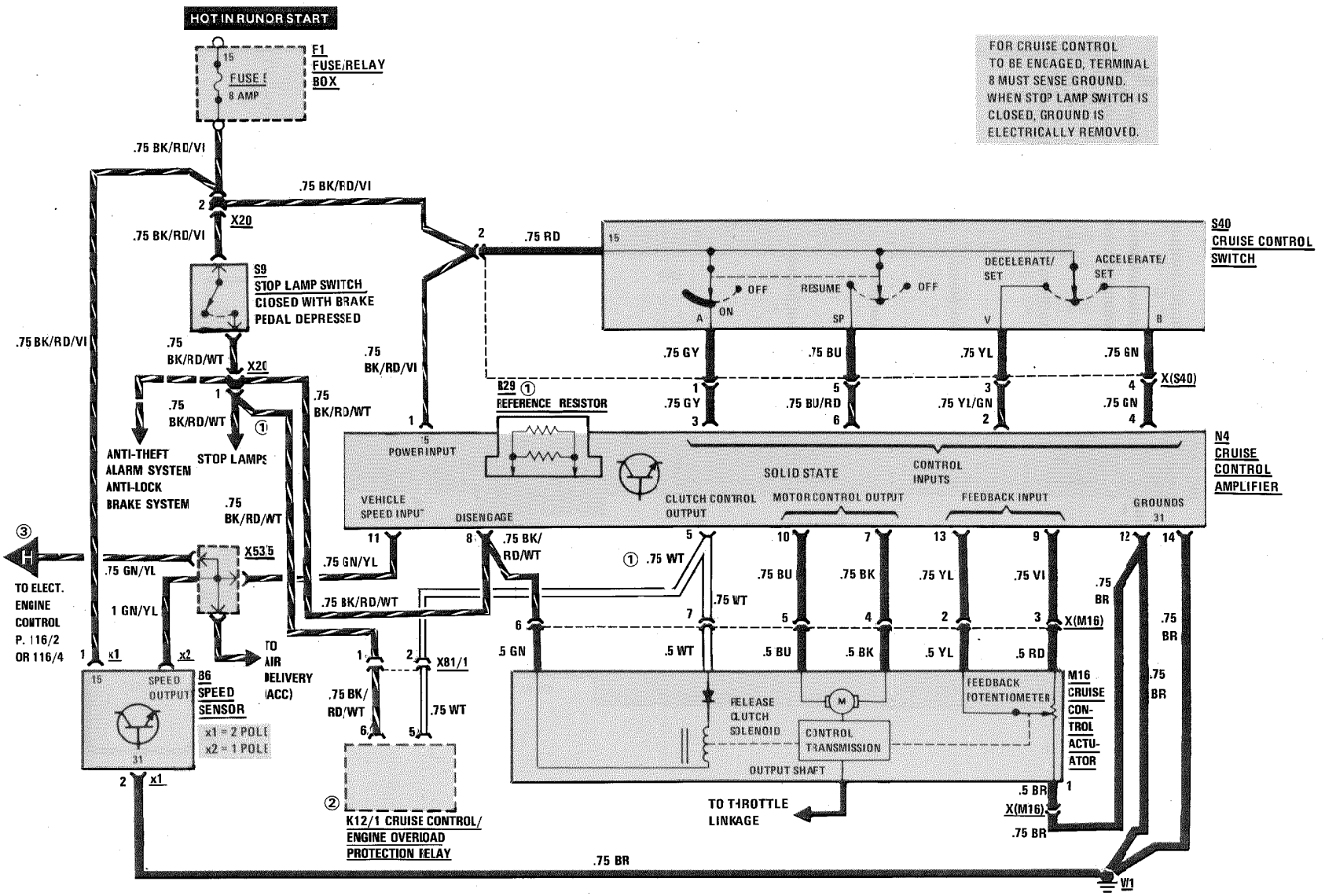

REVISIONS: ① AS OF MY 1988
② AS OF MY 1990

CRUISE CONTROL (WITH MANUAL TRANSMISSION)

MY 1986-1989

260/300E

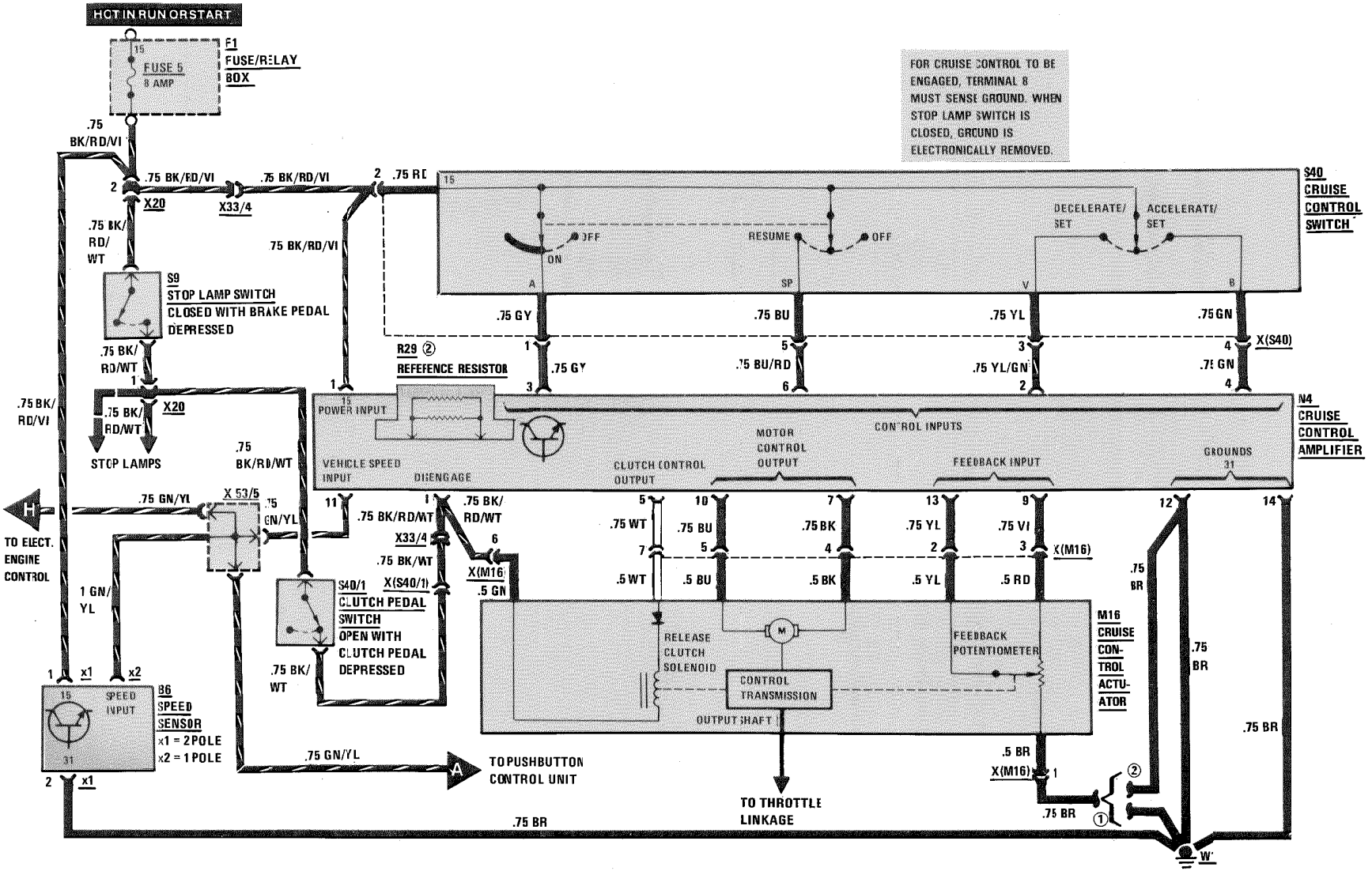

REVISIONS: ① MODEL YEARS 1986 AND 1987
② MODEL YEAR 1988- 1989

CRUISE CONTROL

AS OF MY 1992

400E/500E

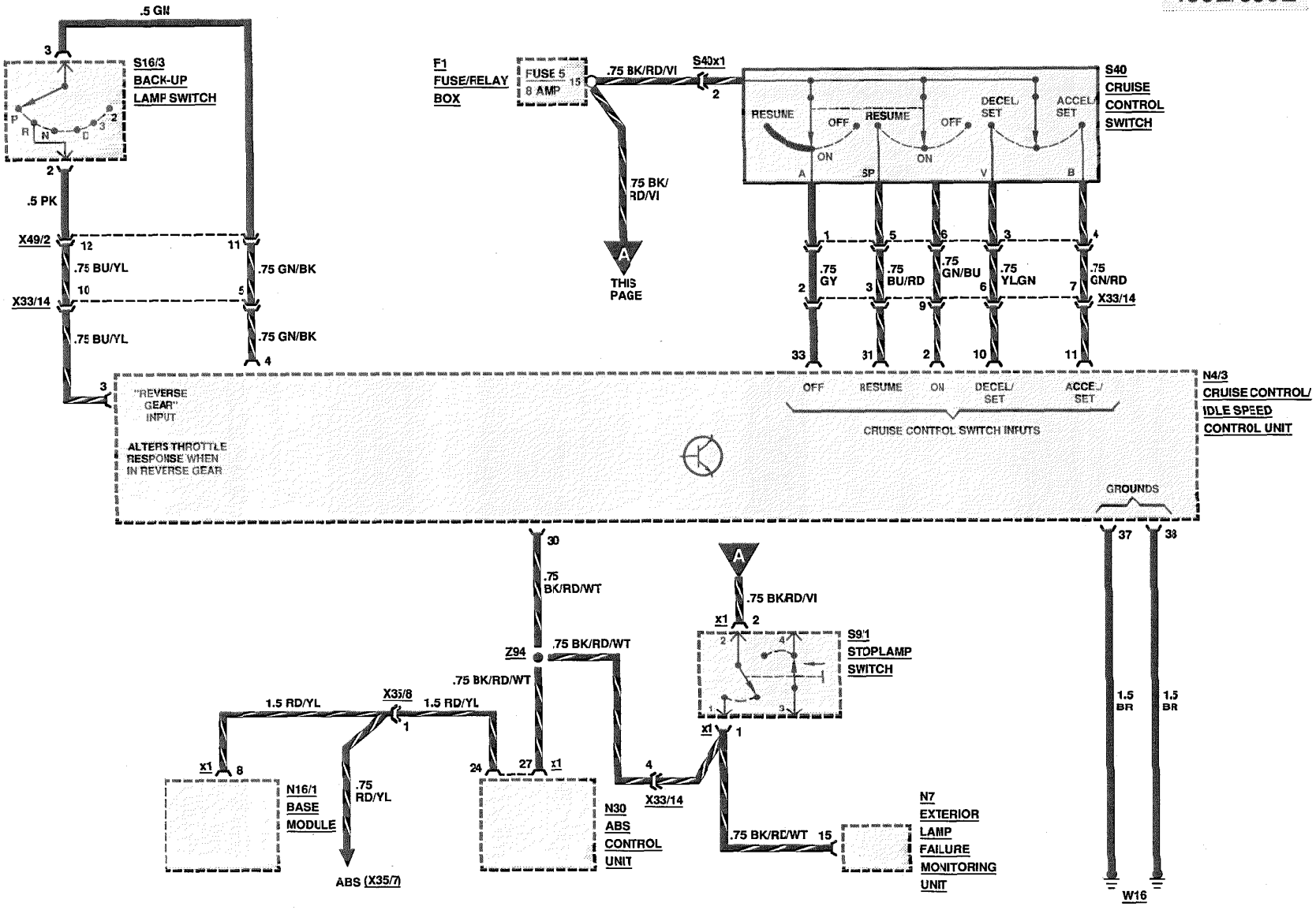

REVISIONS:

CRUISE CONTROL

AS OF MY 1992

400E/500E

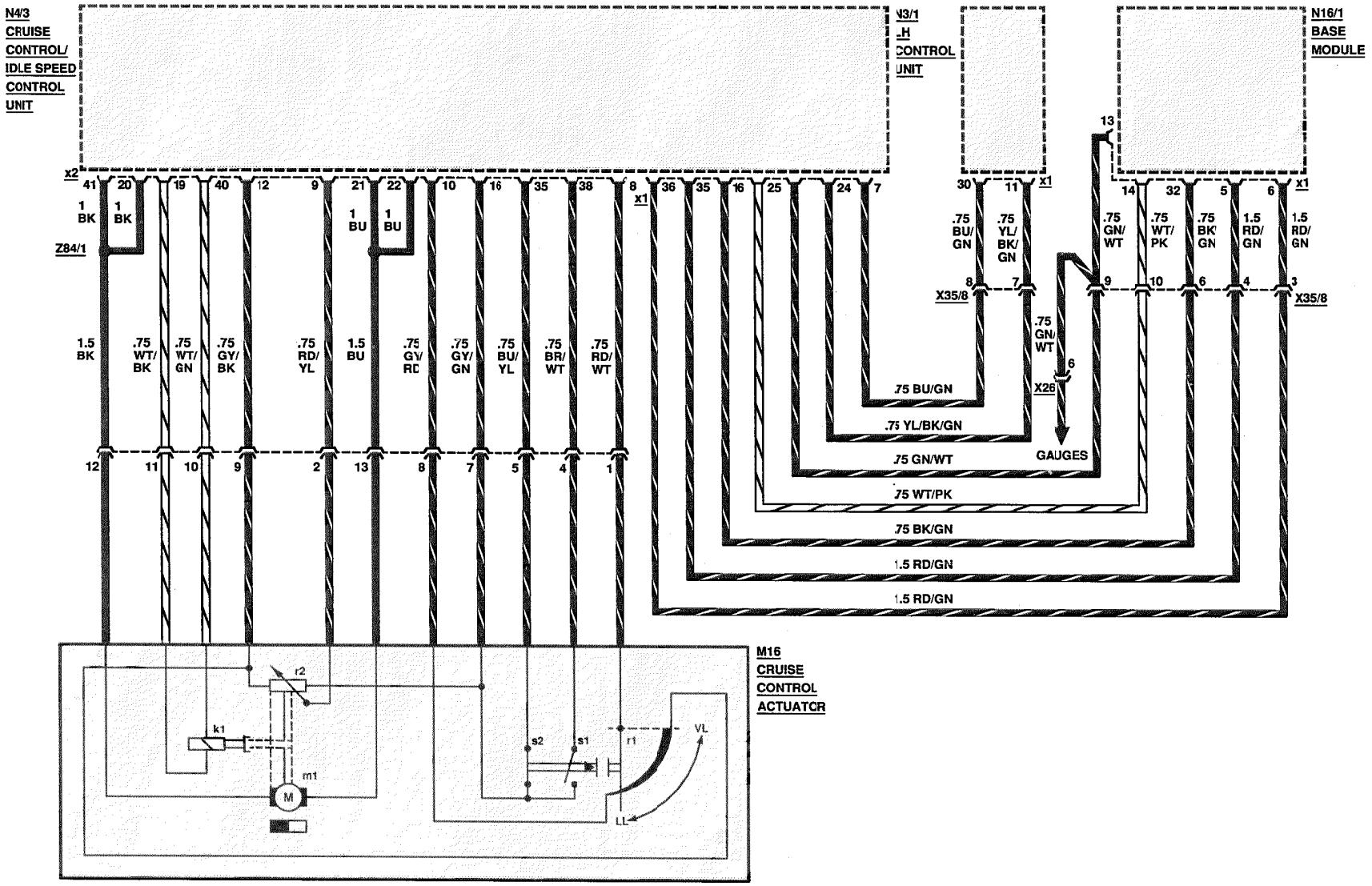

REVISIONS:

THIS PAGE INTENTIONALLY LEFT BLANK

REVISIONS:

ELECTRONIC ACCELERATOR SYSTEM

AS OF MY 1991

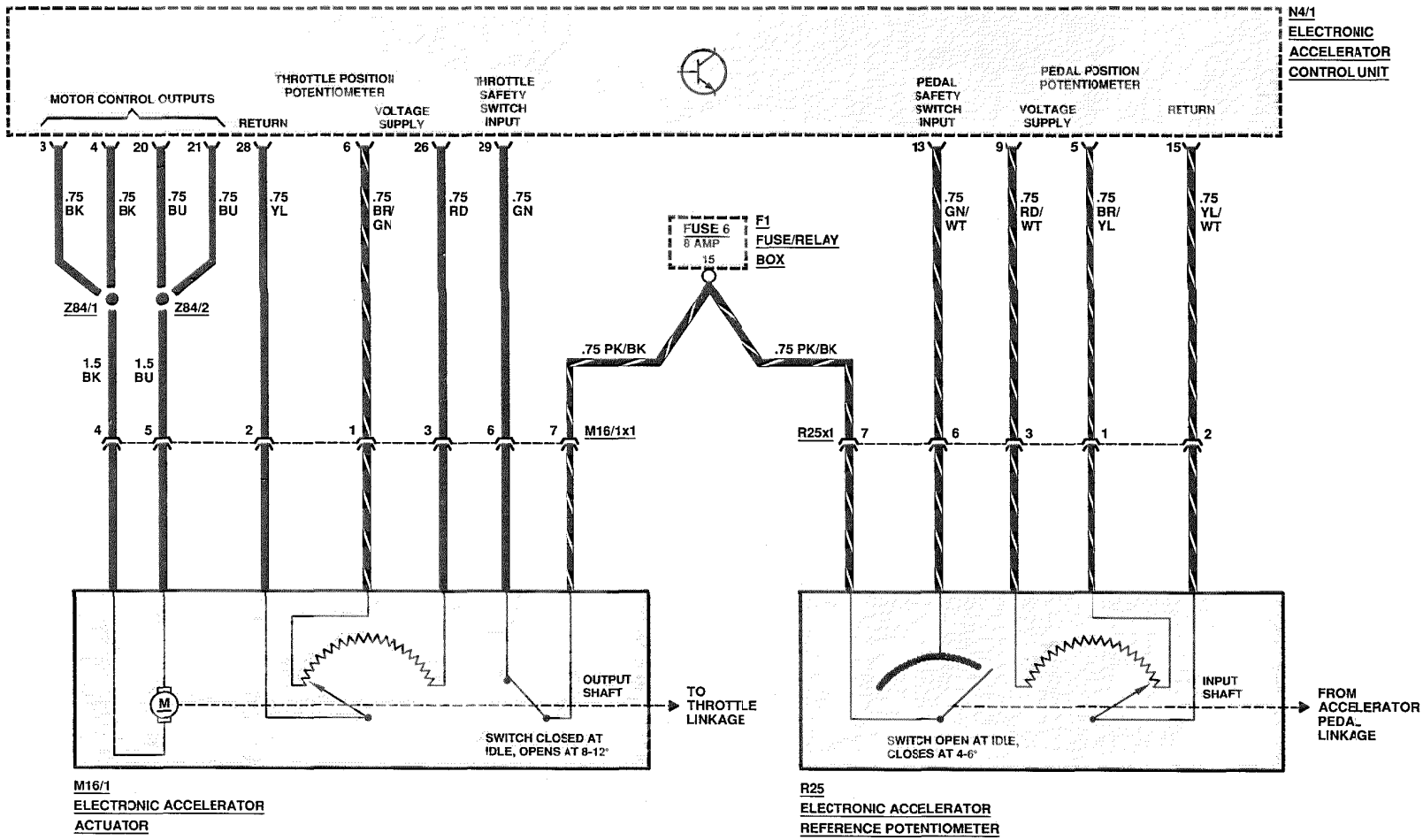

REVISIONS:

ELECTRONIC ACCELERATOR SYSTEM/CRUISE CONTROL

AS OF MY 1991

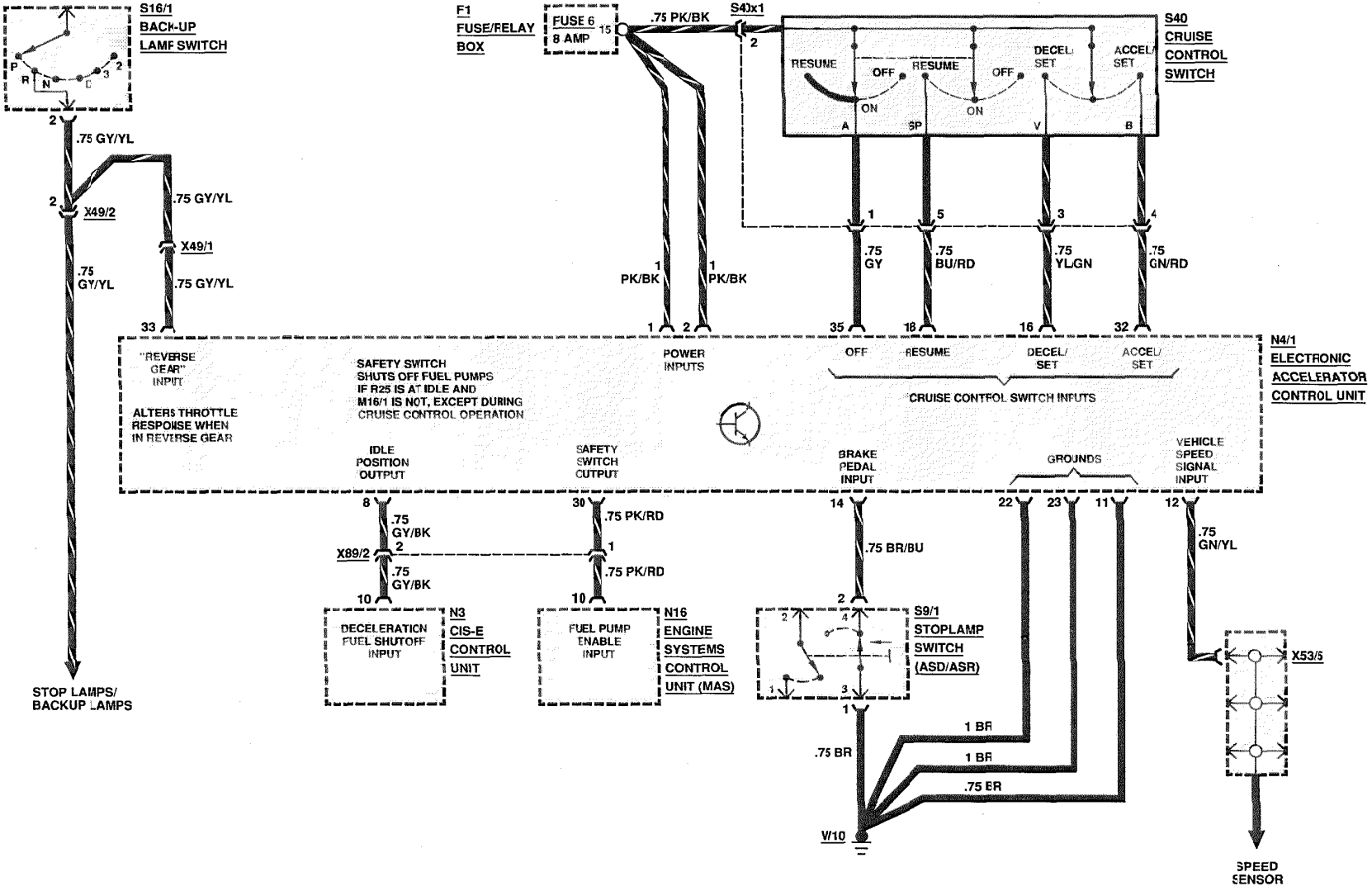

REVISIONS:

ELECTRONIC ACCELERATOR SYSTEM/CRUISE CONTROL

AS OF MY 1992

400E/500E

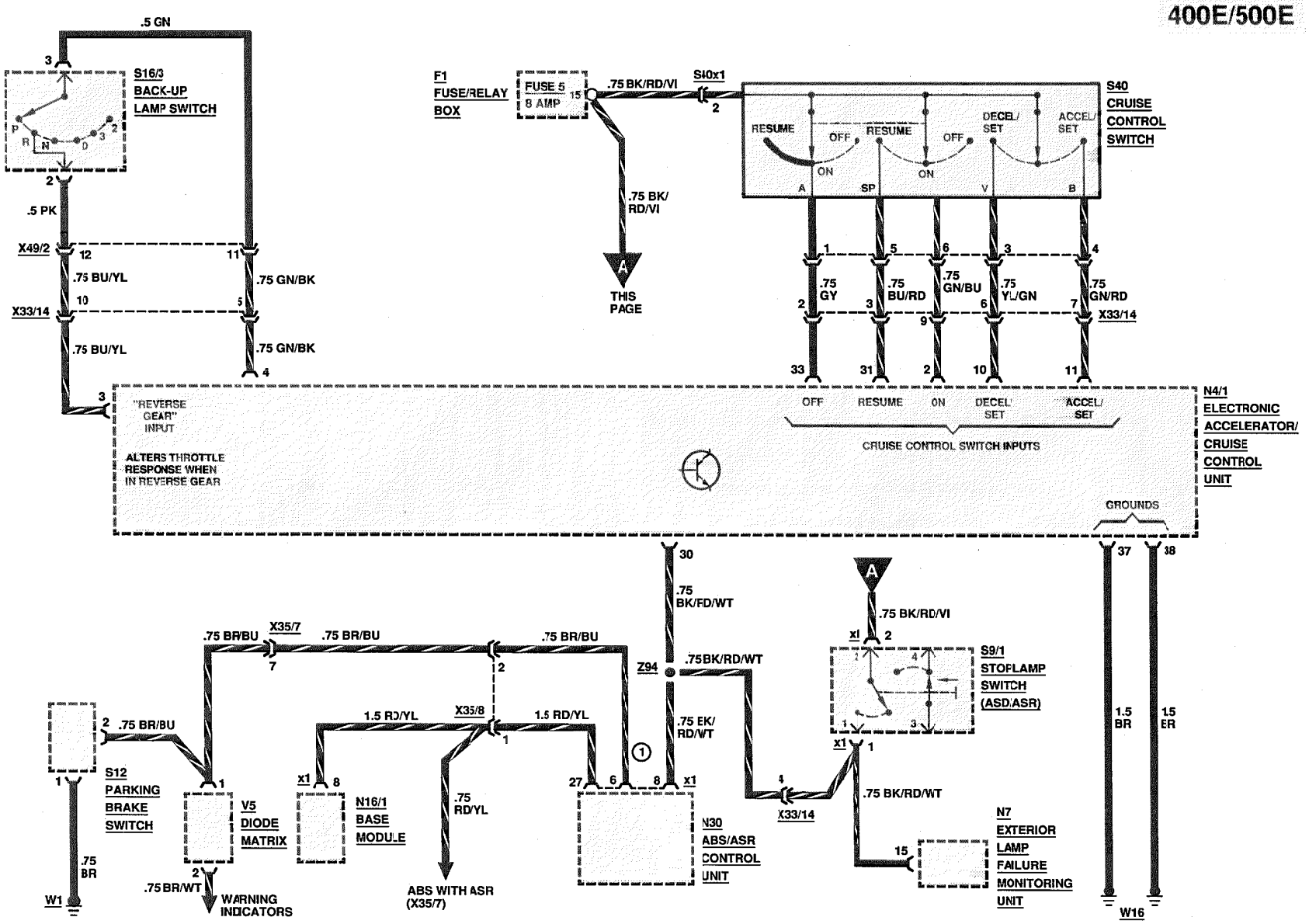

REVISIONS: ① MODEL 500E

ELECTRONIC ACCELERATOR SYSTEM

AS OF MY 1992

400E/500E

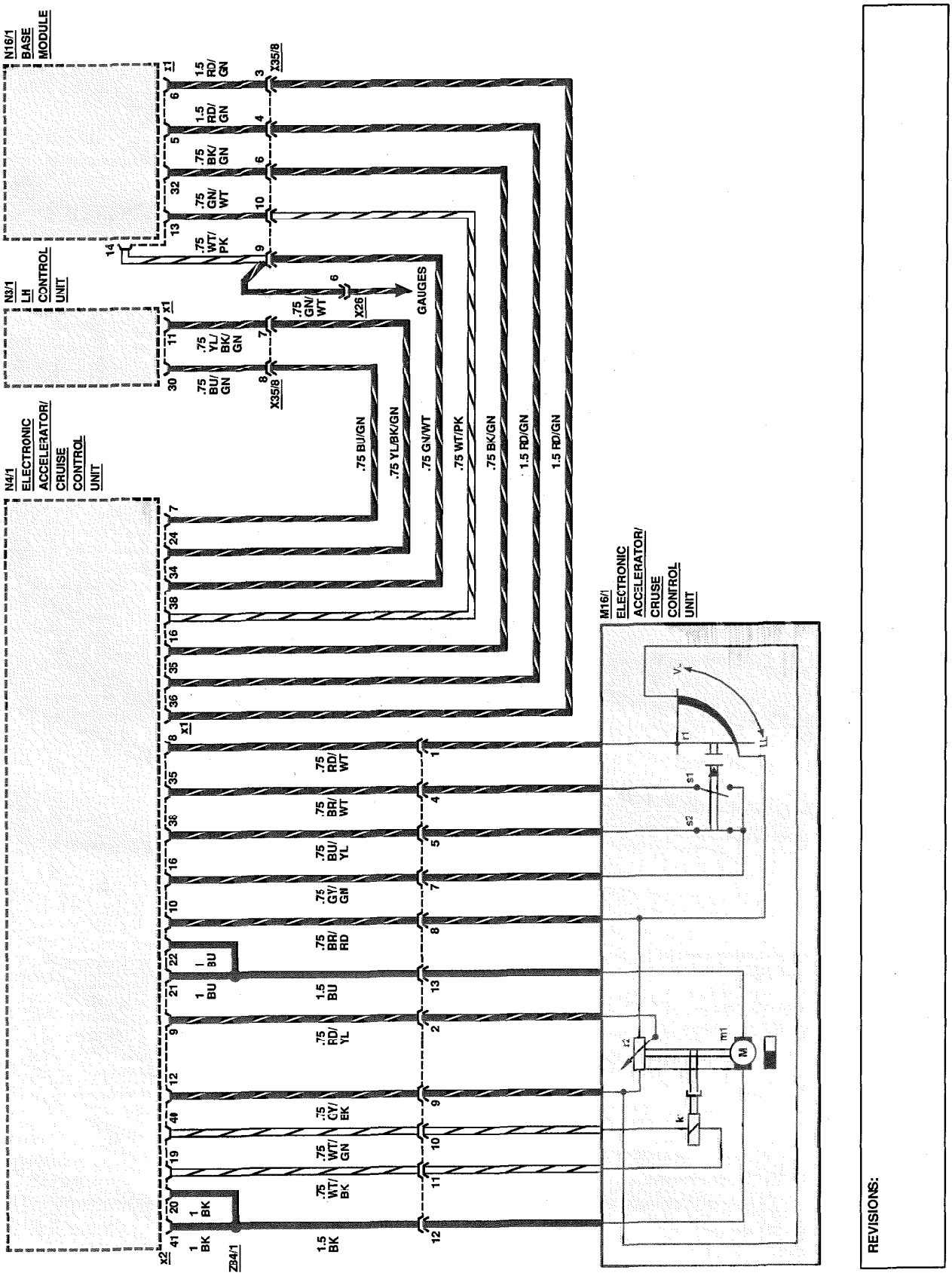

REAR HEAD RESTRAINT SYSTEM

AS OF MY 1986

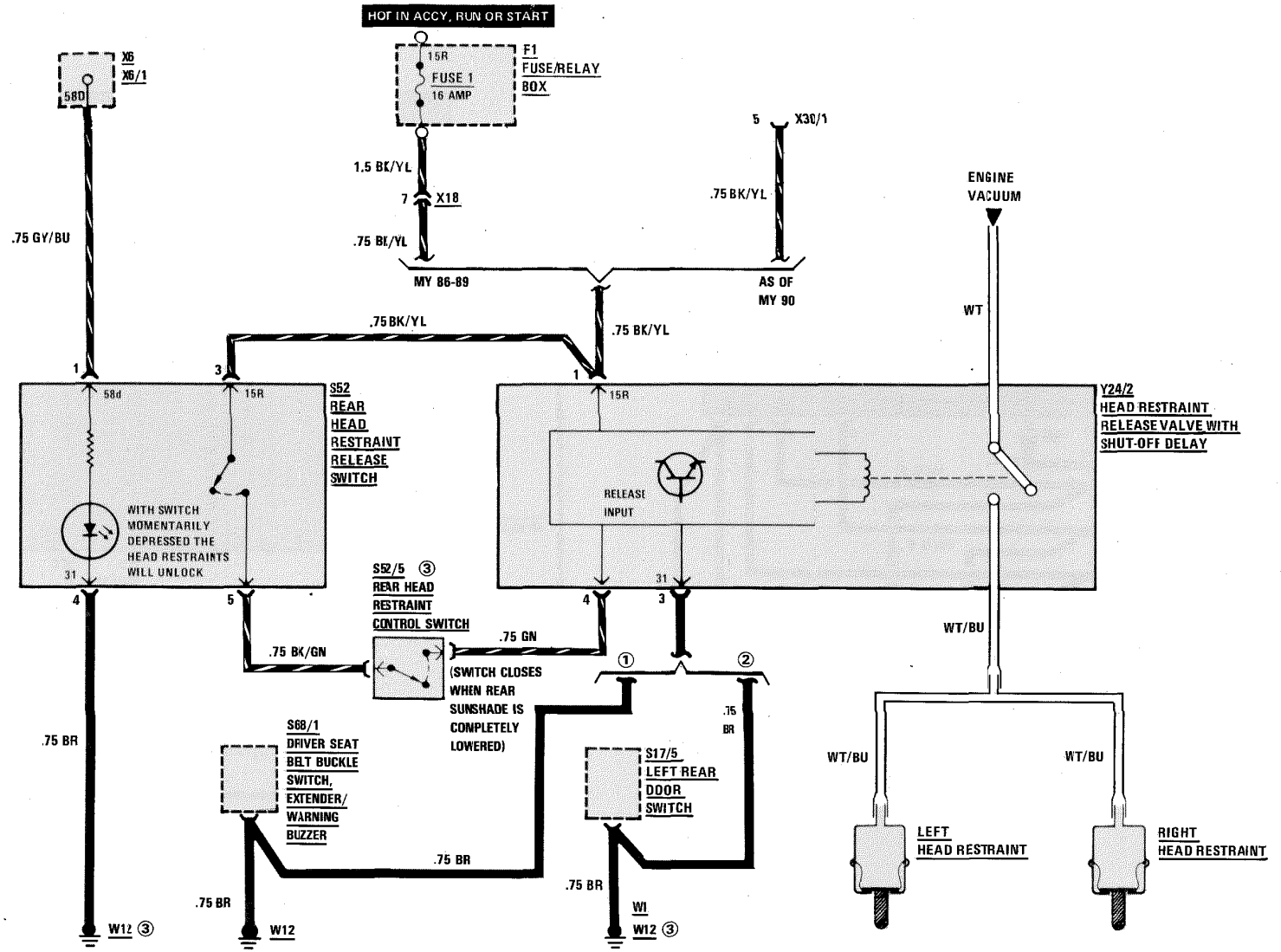

REVISIONS: ① 300 CE (124.050)
② 260 E/300 E (124.026/.030)
③ AS OF 10/1989 PRODUCTION WITH SUNSHADE

SLIDING ROOF

MODEL YEARS 1986-1989

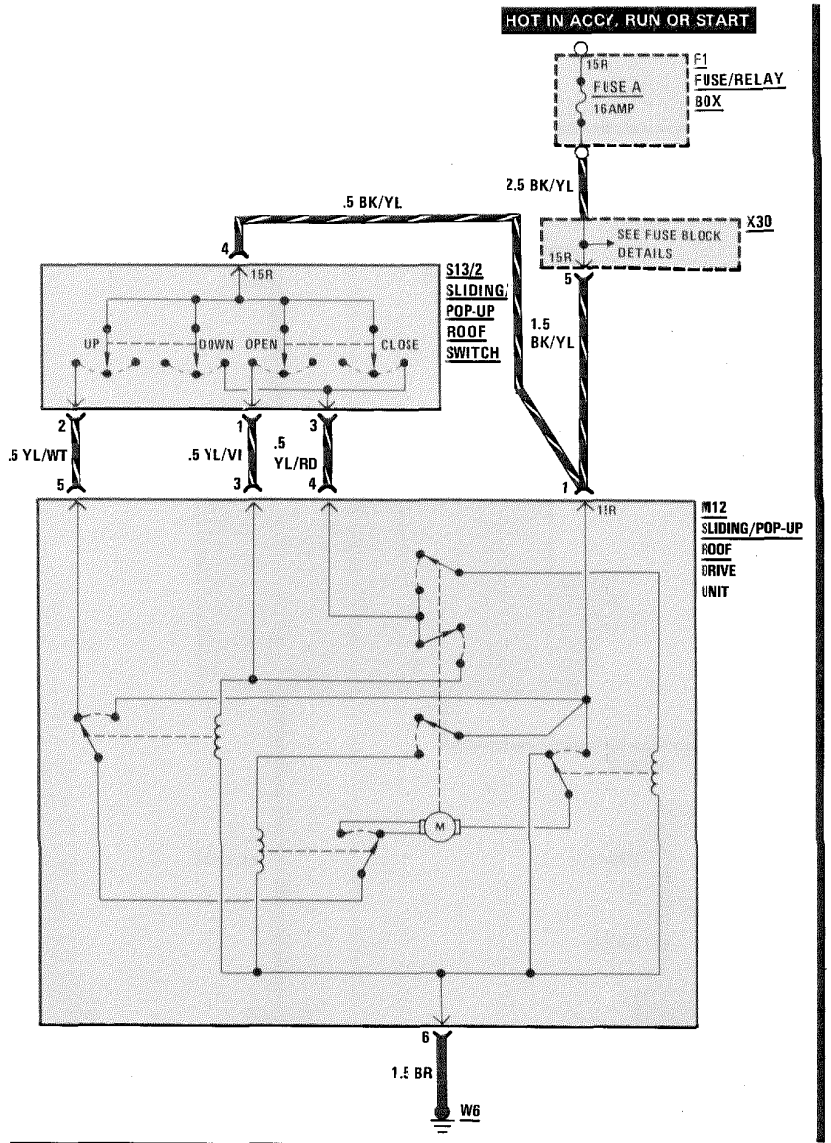

AS OF MODEL YEAR 1990

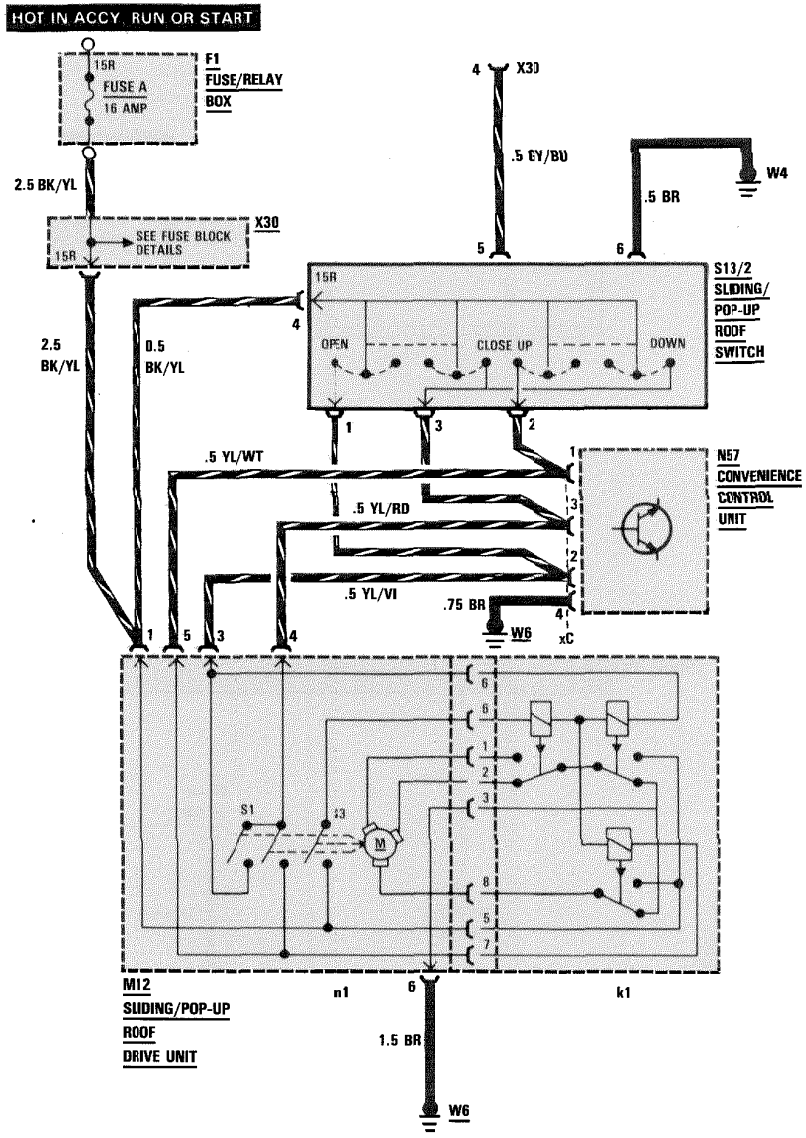

REVISIONS:

REAR DEFOGGER

AS OF MY 1986

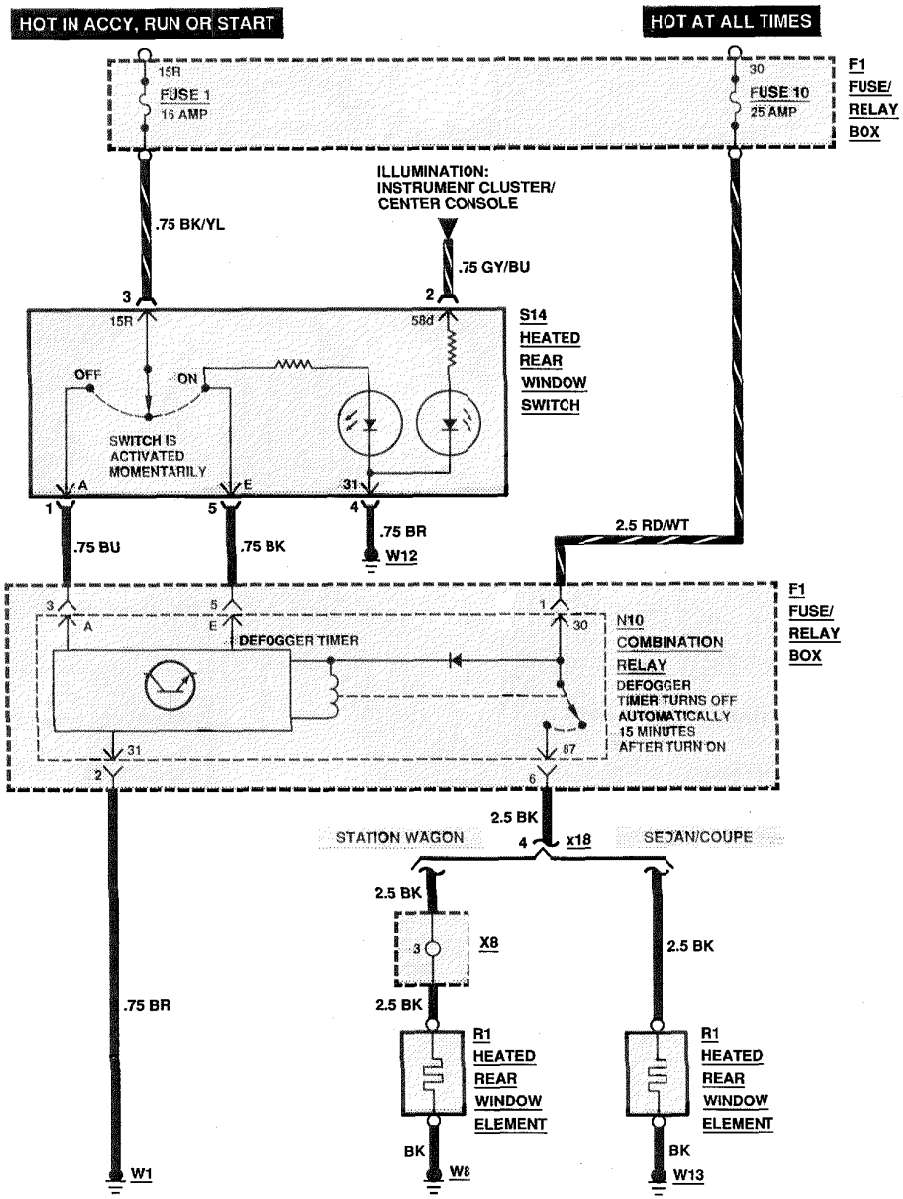

REVISIONS:

HEATED SEATS

UP TO APRIL 1987 PRODUCTION

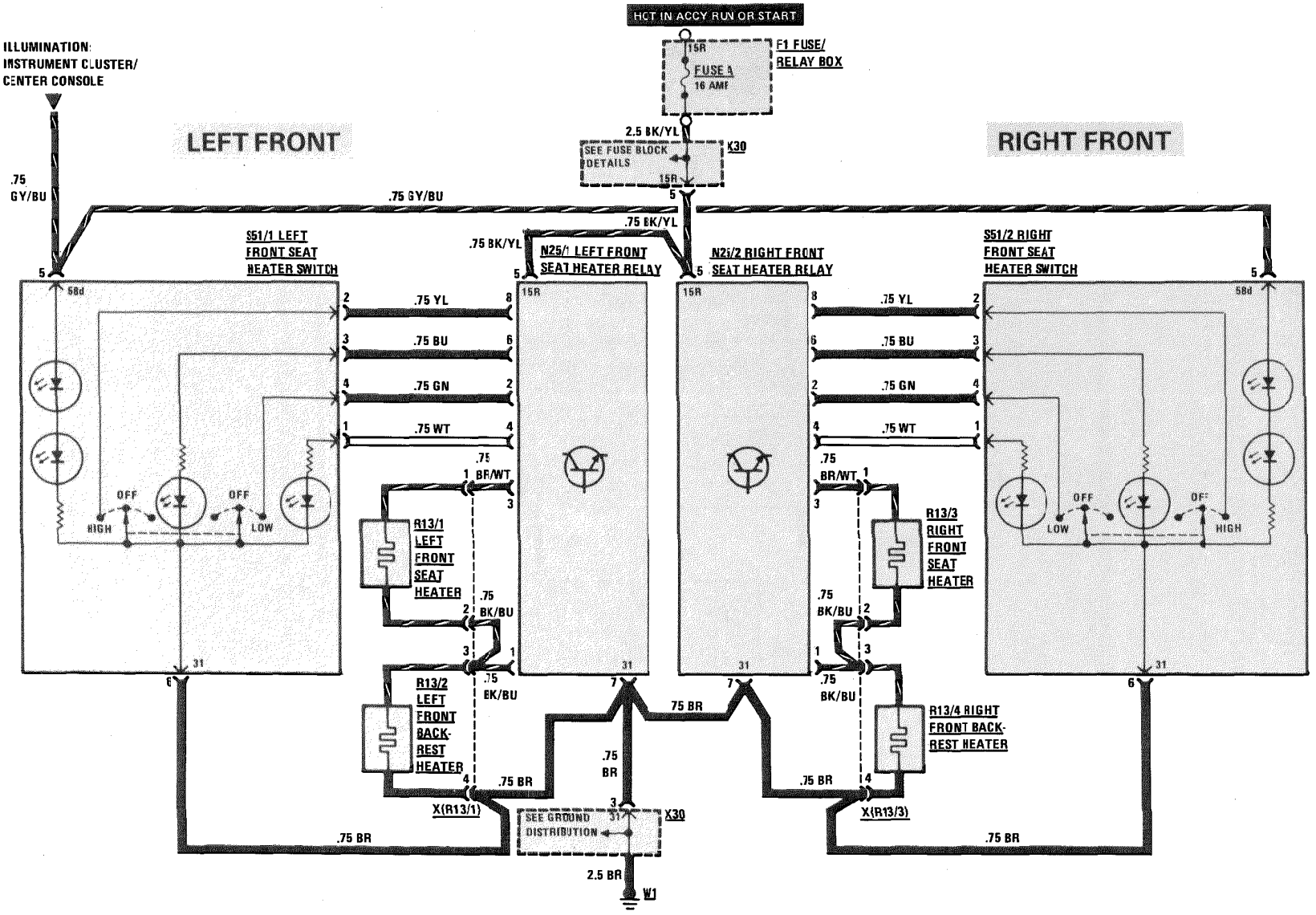

REVISIONS:

HEATED SEATS

4/1987 PRODUCTION TO MY 1990

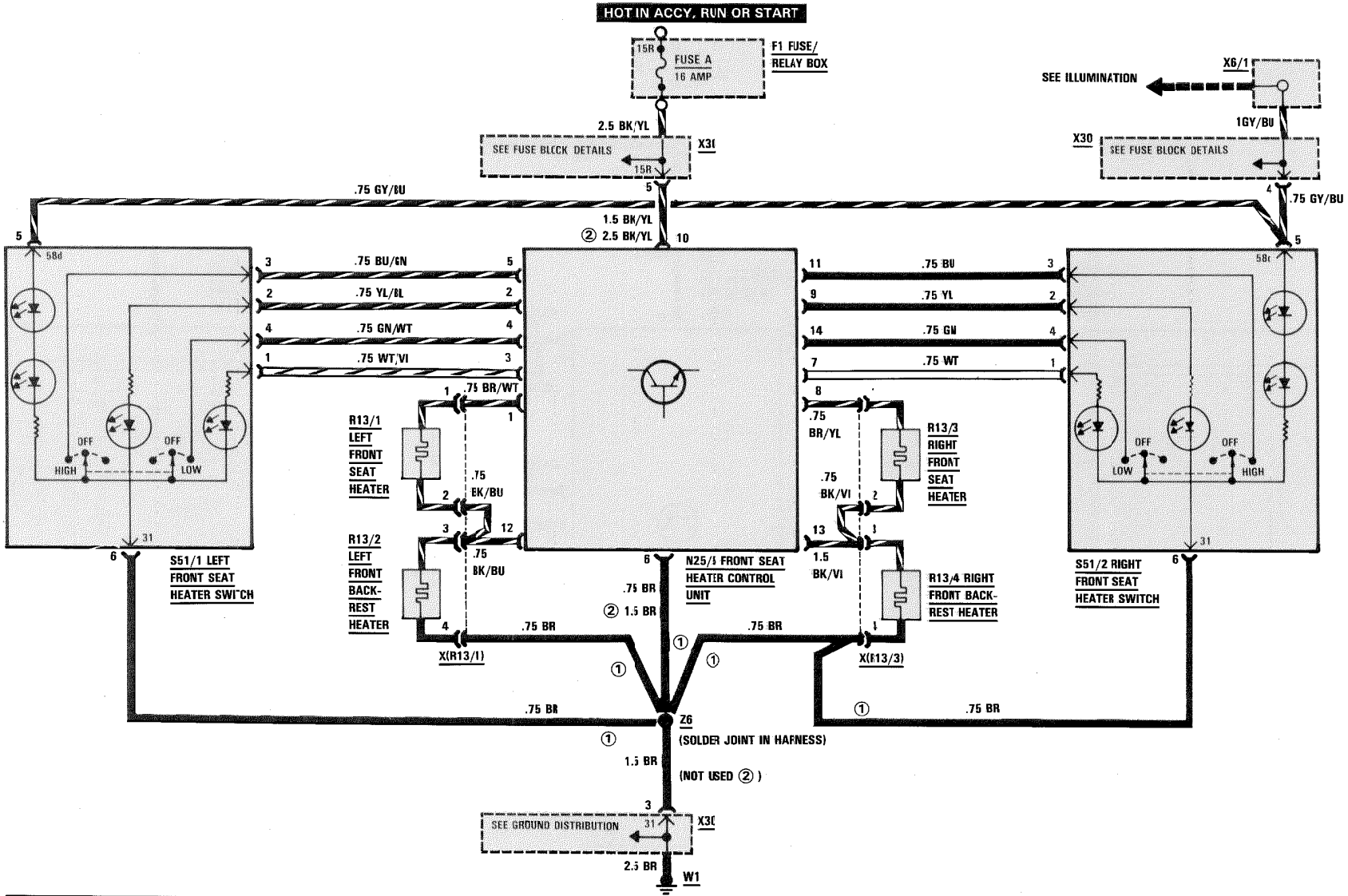

REVISIONS: ① AS OF MY 1989, GROUNDED DIRECTLY TO W12
② AS OF MY 1989

HEATED SEATS

AS OF MY 1991

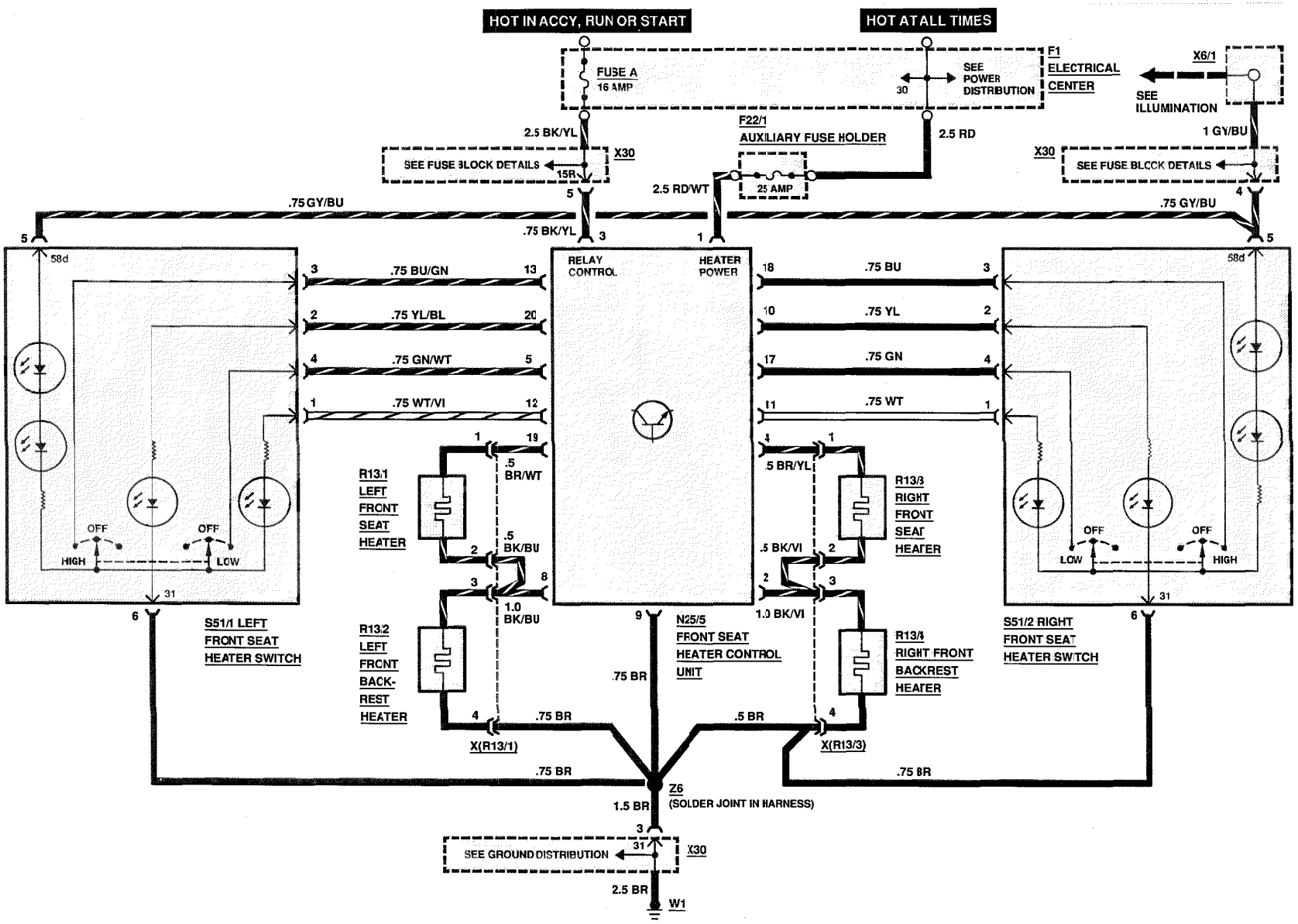

REVISIONS:

REAR WINDOW SUNSHADE

AS OF MY 1988

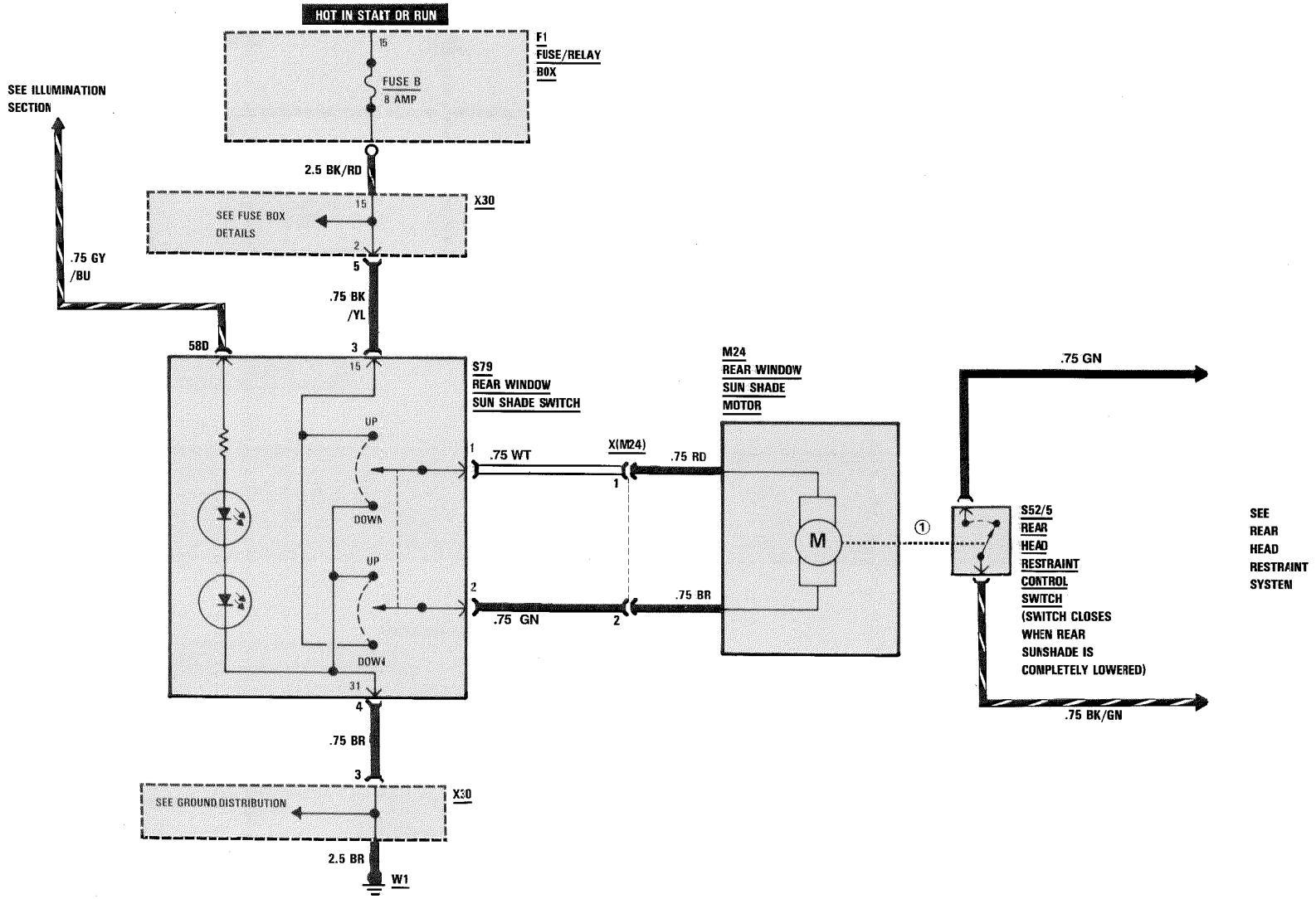

REVISIONS: ① AS OF 10/1989 PRODUCTION

POWER WINDOWS

MY 1986-1989

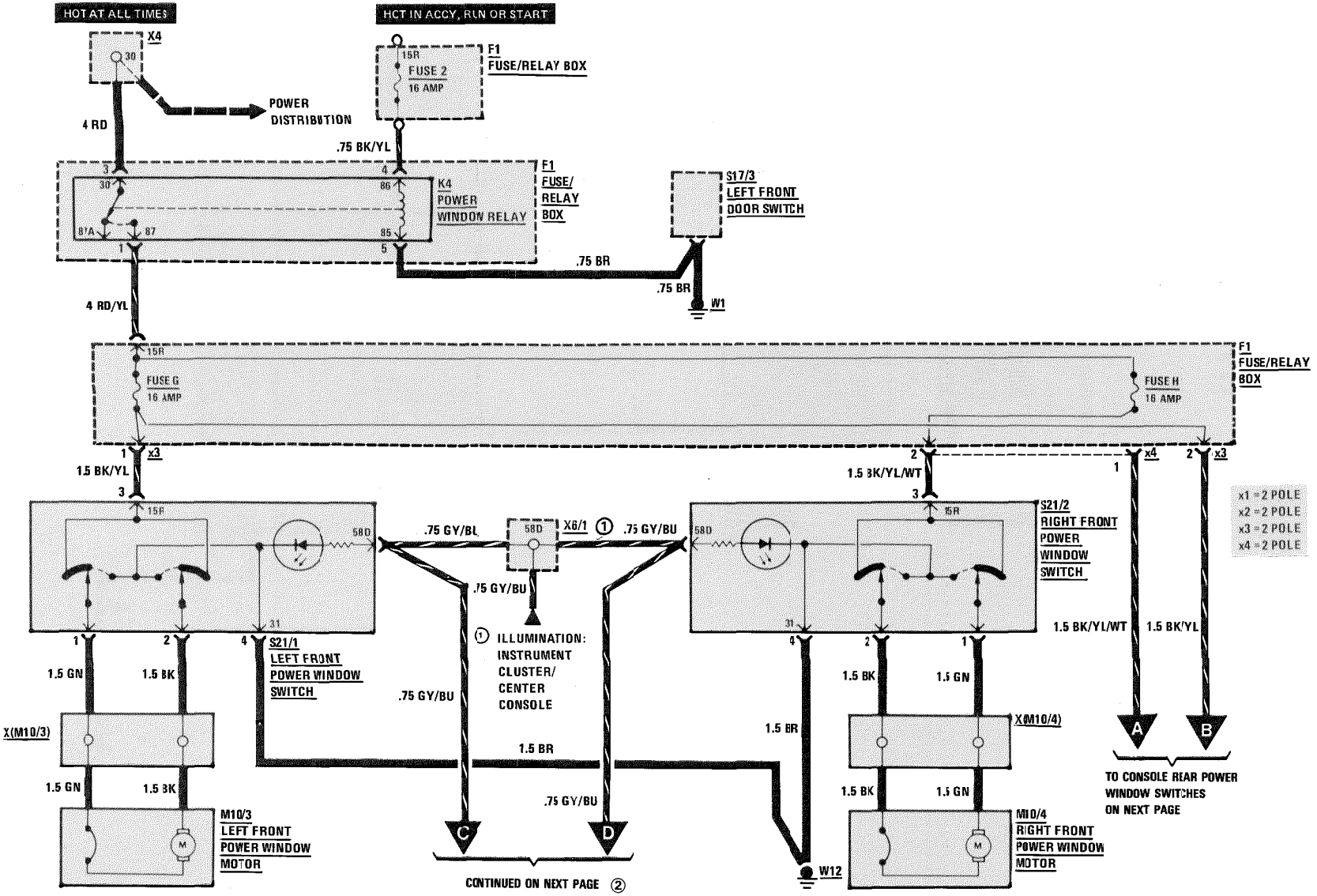

REVISIONS: ① X6 BEFORE JANUARY 1986, SEE PAGE 126
② 260 E/300 E/300 TE ONLY

POWER WINDOWS

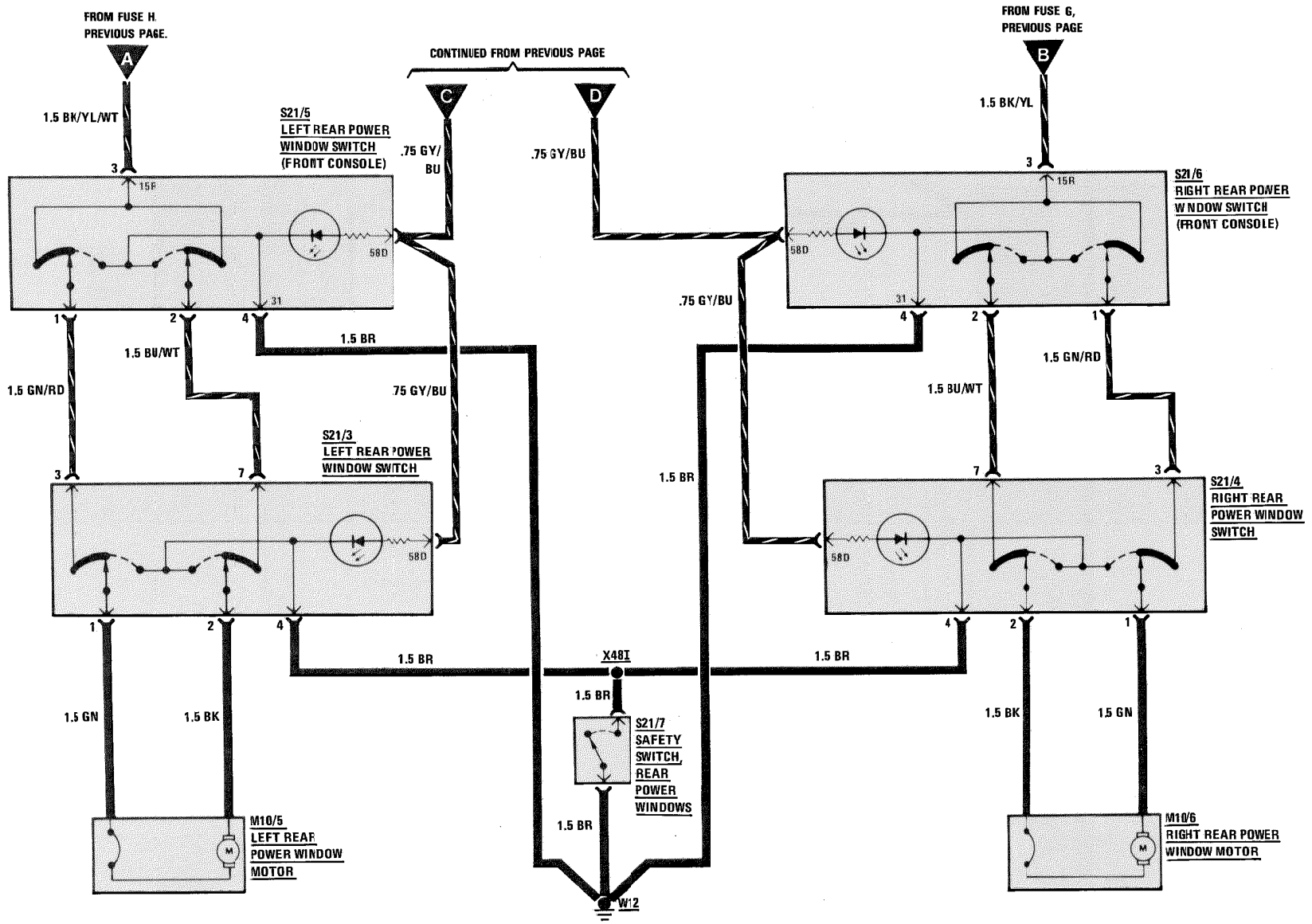

REVISIONS:

POWER WINDOWS (COMFORT SYSTEM)

AS OF MY 1990

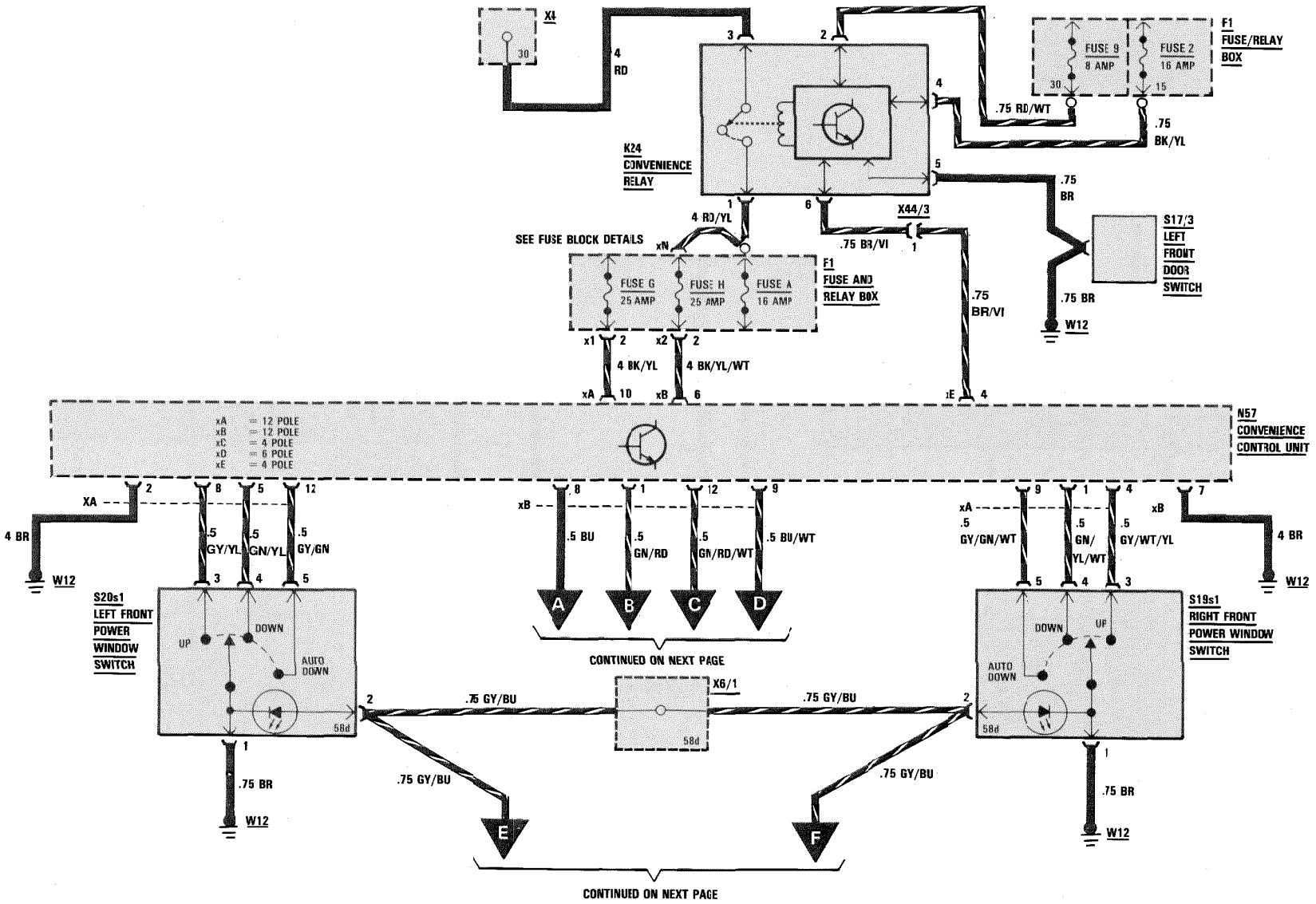

REVISIONS:

POWER WINDOWS (COMFORT SYSTEM)

AS OF MY 1990

CONTINUED FROM PREVIOUS PAGE

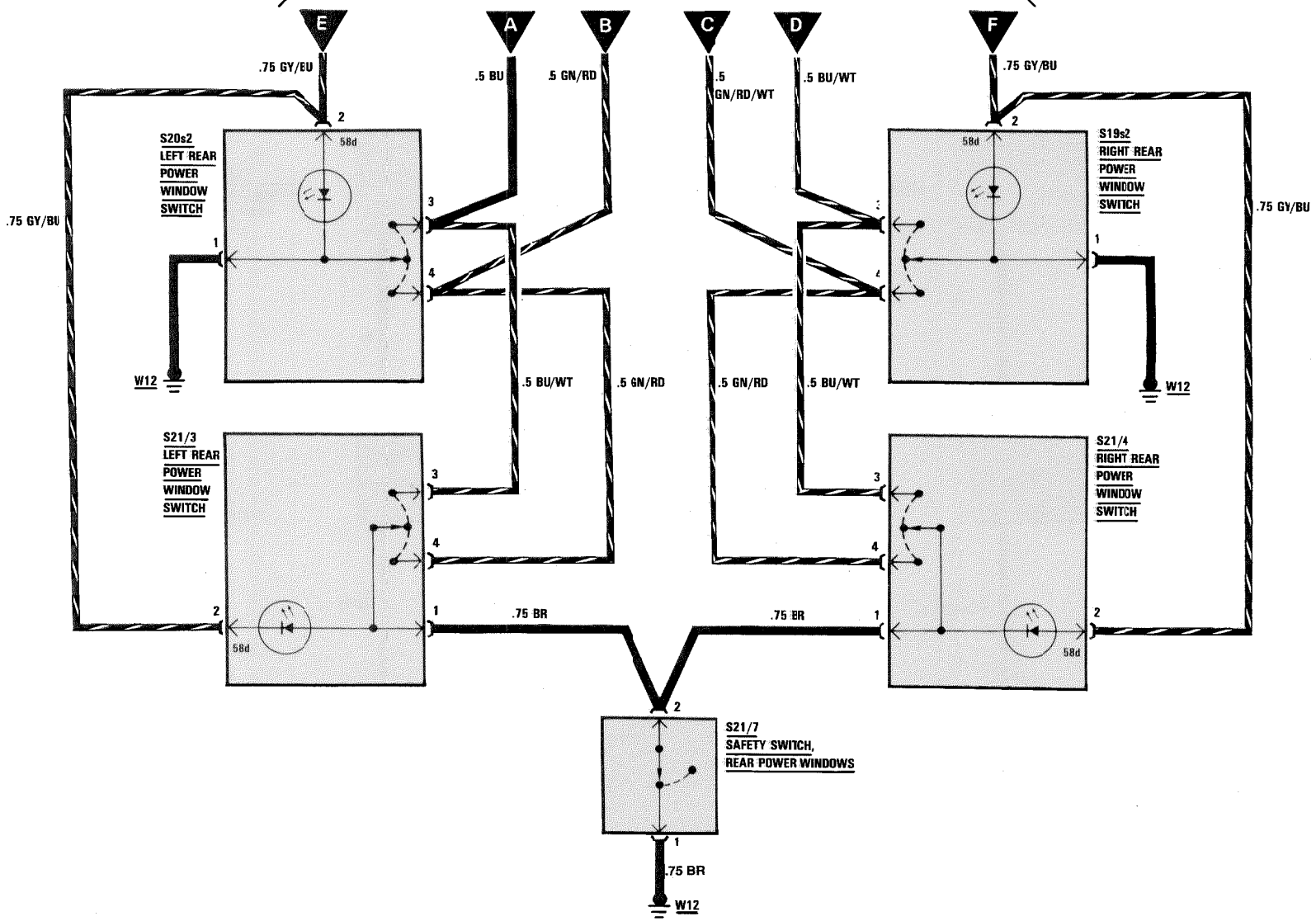

REVISIONS:

POWER WINDOWS

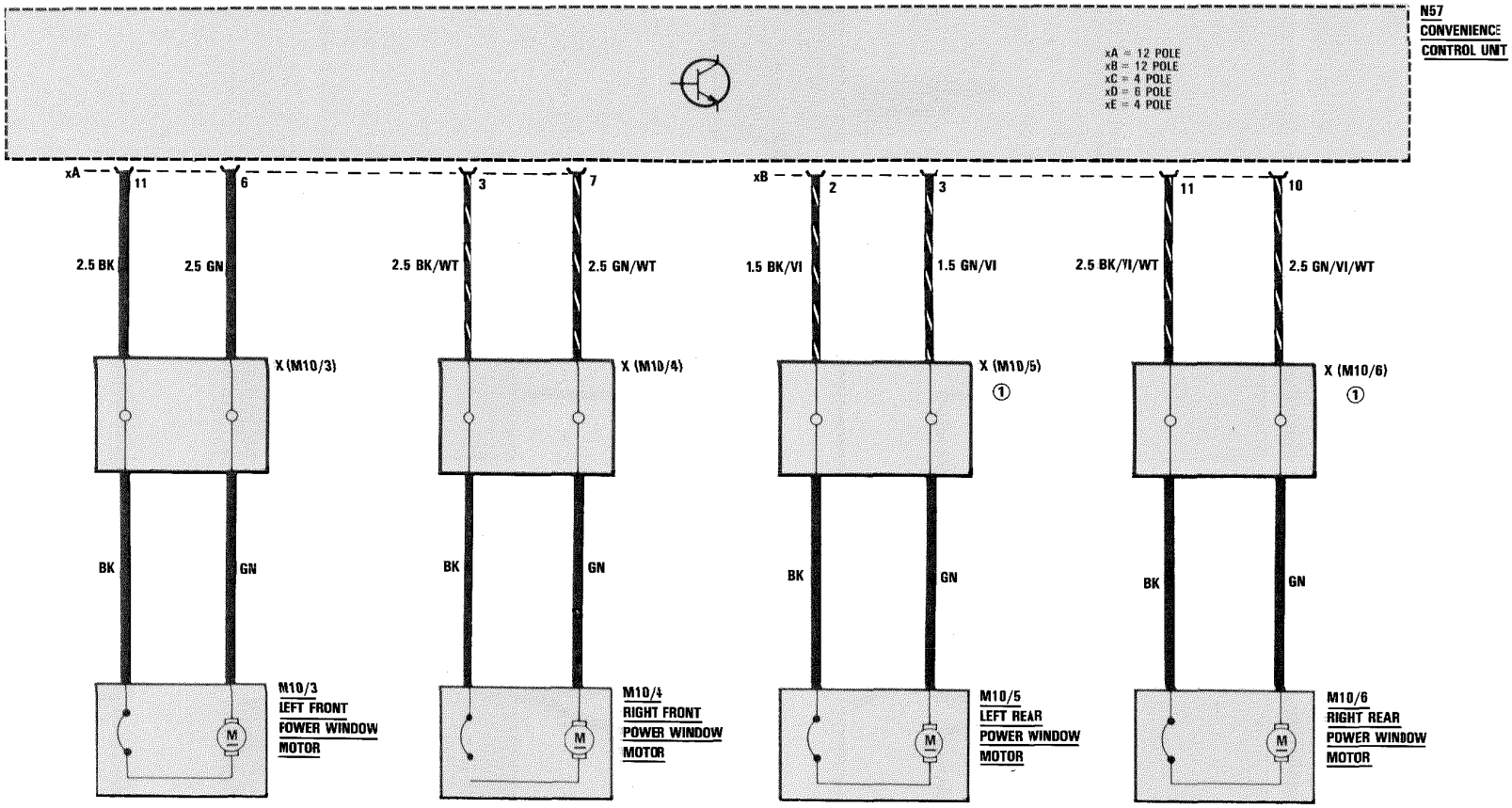

REVISIONS: ① MODEL 124.051 USES A 2-POLE CONNECTOR INSTEAD OF SCREW TERMINALS

POWER WINDOWS (COMFORT SYSTEM)

AS OF MY 1990

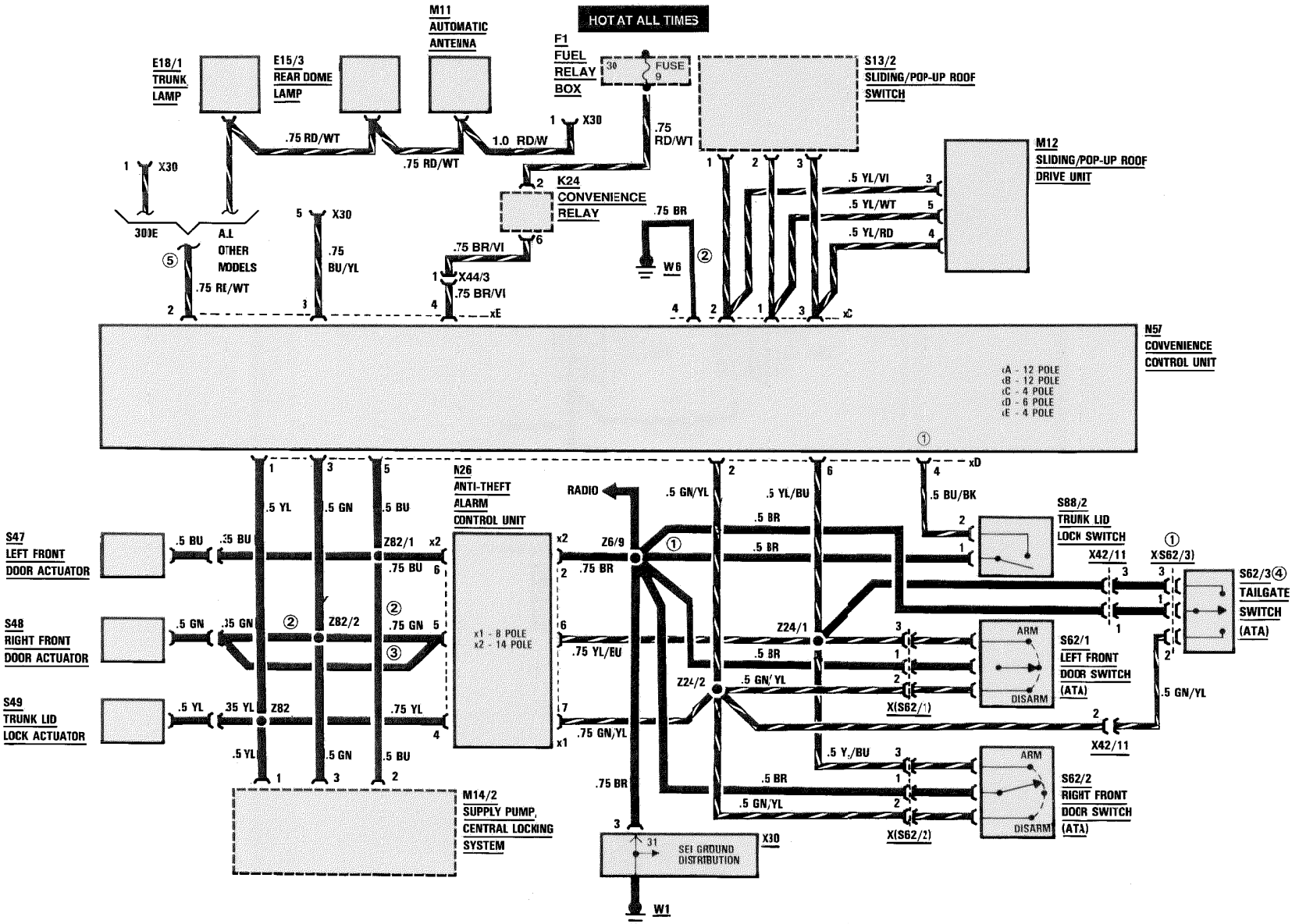

REVISIONS:
① NOT IN T-MODEL, INSTEAD SEE X62/3
② NOT IN 300E
③ 300E ONLY
④ STATION WAGON ONLY
⑤ AS OF MY 1991, ALL MODELS CONNECT TO X30

HORNS

AS OF MY 1986

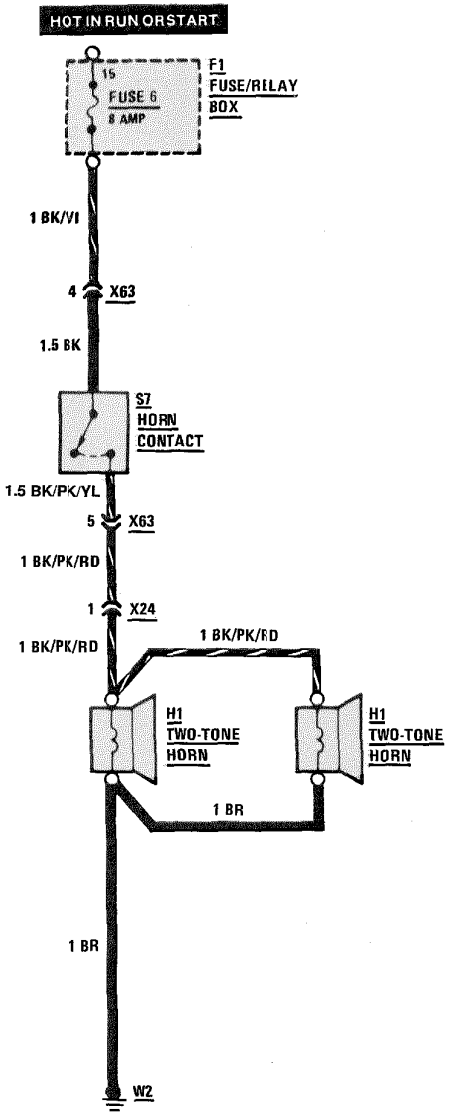

REVISIONS:

CENTRAL LOCKING SYSTEM

AS OF MY 1986

300 E/ 300 D

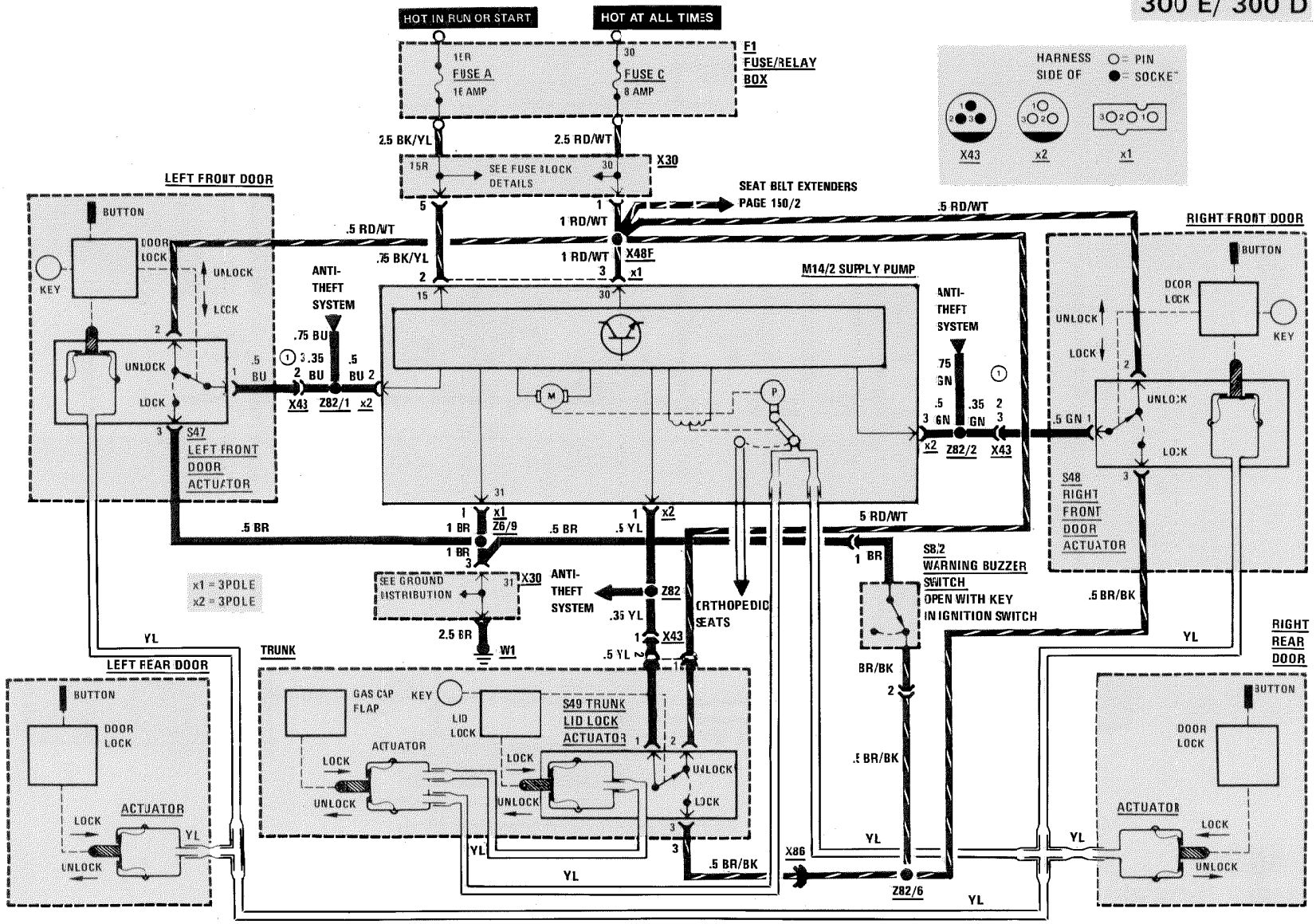

REVISIONS: ① AS OF MODEL YEAR 87

CENTRAL LOCKING SYSTEM

AS OF MY 1987
260E/300D2.5/
300TE/300TD/
300CE ③

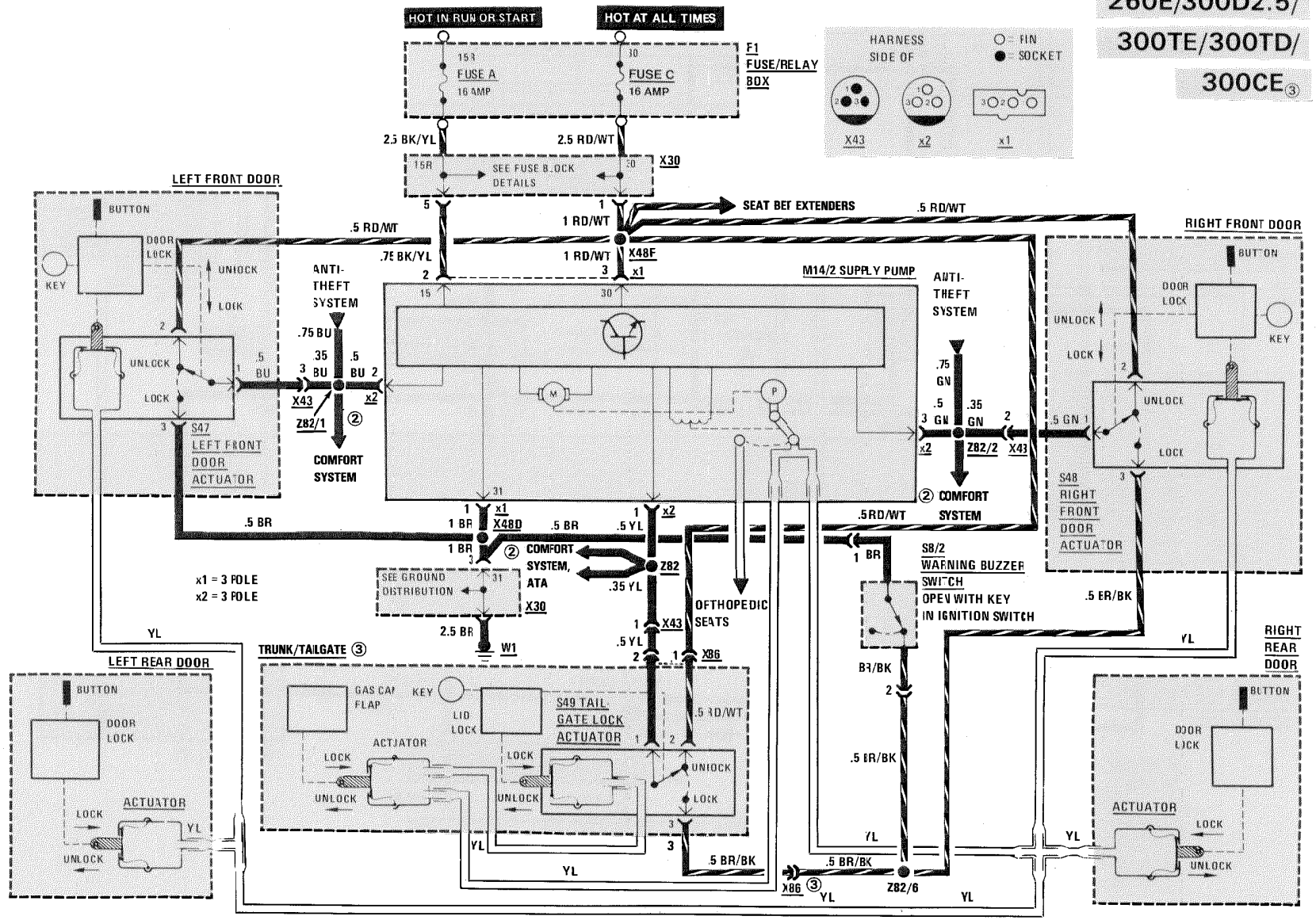

REVISIONS: ① STATION WAGON ONLY
② AS OF MY 1990
③ MODEL YEARS 1988, 1989 ONLY

CENTRAL LOCKING SYSTEM

AS OF MY 1990

EXCEPT 300CE

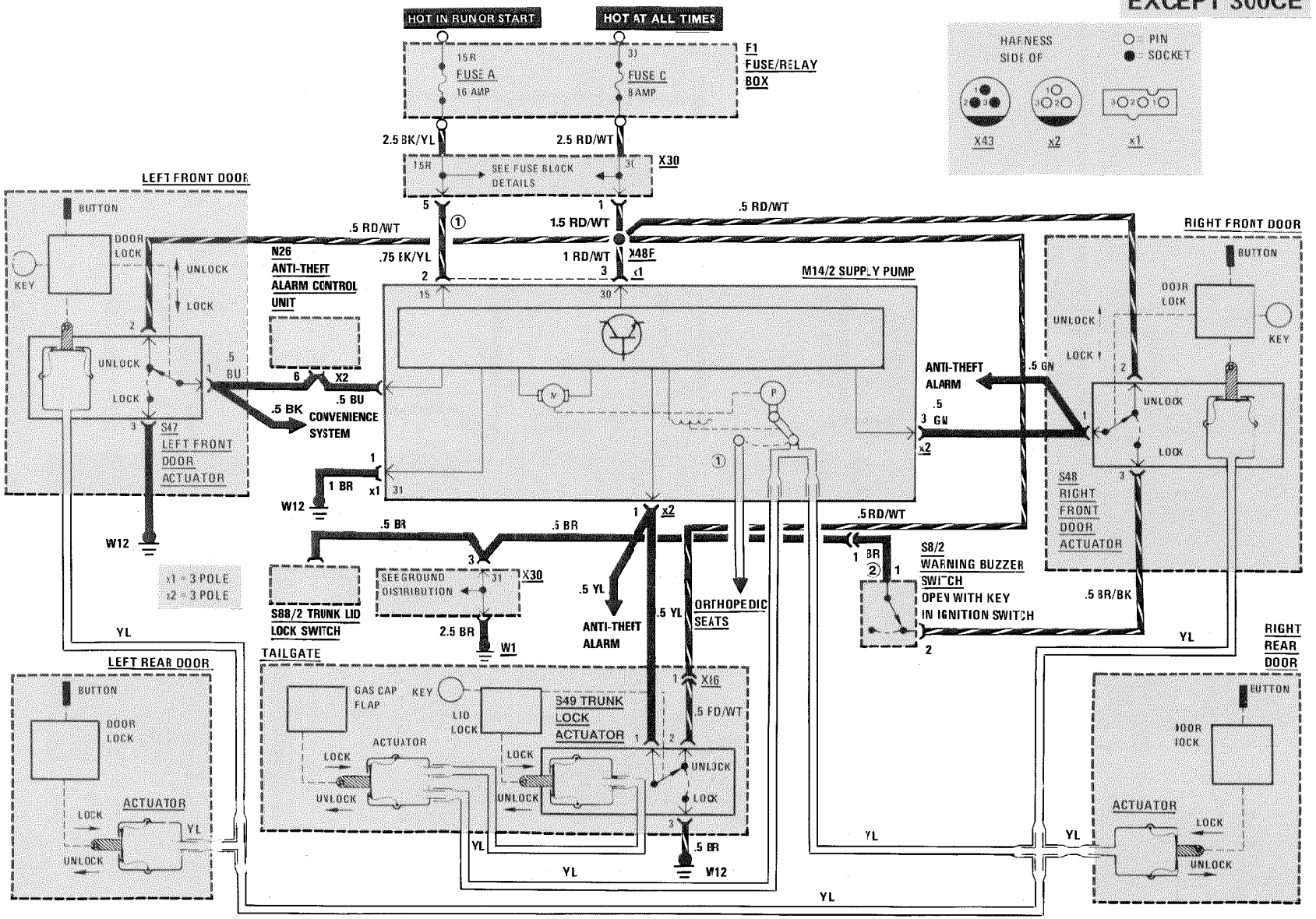

REVISIONS: ① ONLY WITH ORTHOPEDIC SEATS
② AS OF MY 1991 GROUNDED DIRECTLY TO W1

CENTRAL LOCKING SYSTEM

MY 1990

300CE

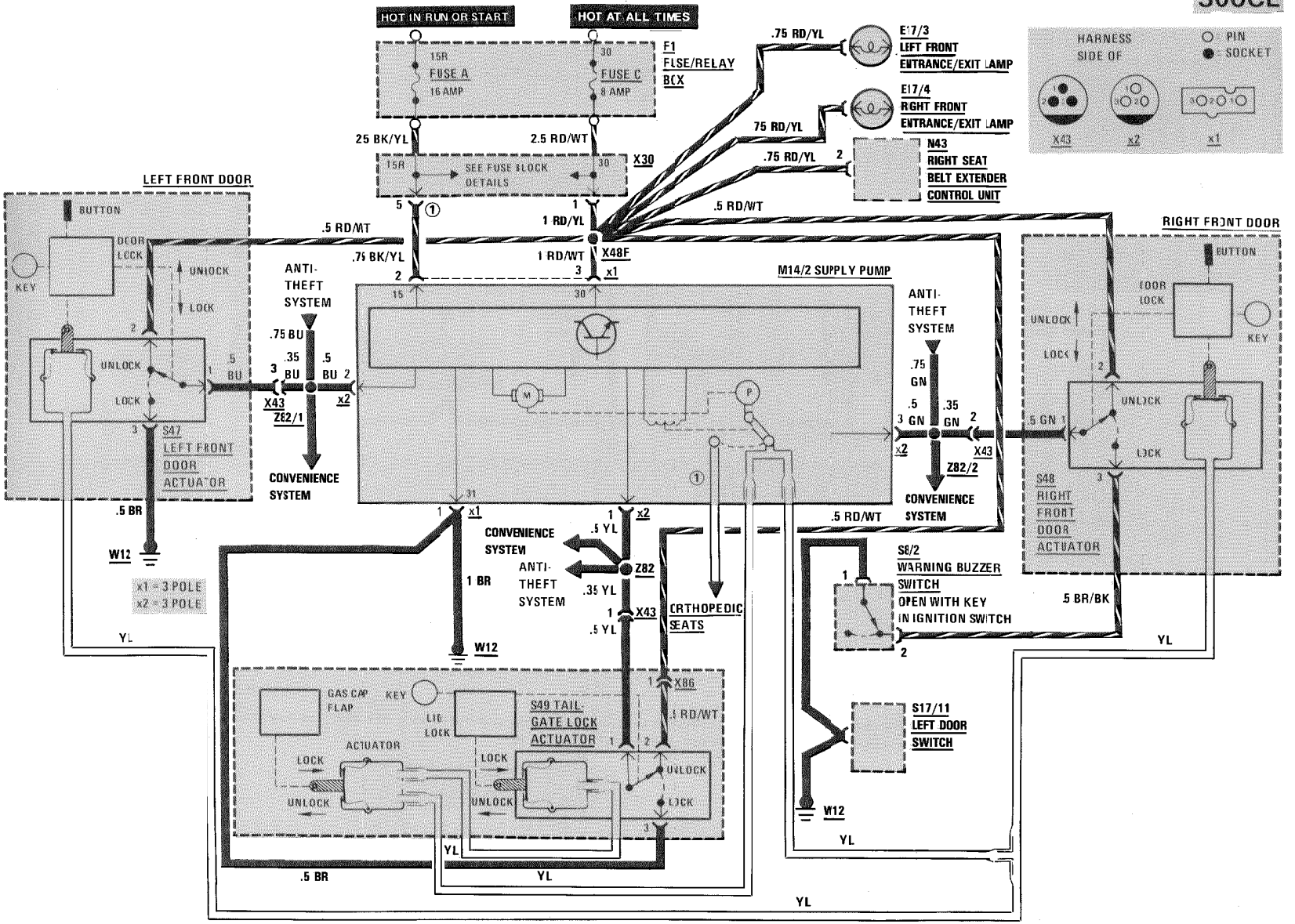

REVISIONS: ① ONLY WITH ORTHOPEDIC SEATS

CENTRAL LOCKING SYSTEM

AS OF MY 1991

300CE

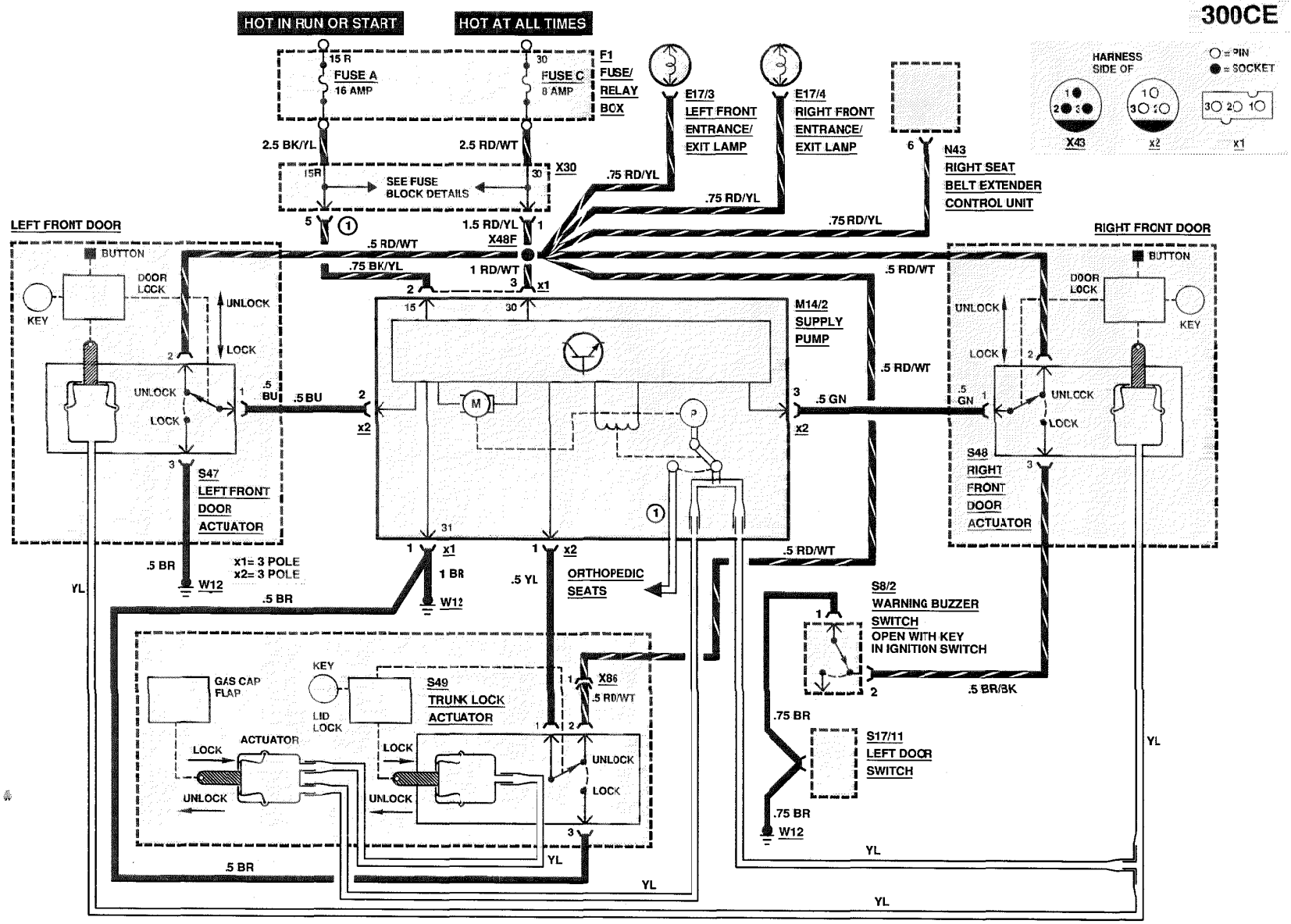

REVISIONS: (1) ONLY WITH ORTHOPEDIC SEATS

TELESCOPIC STEERING COLUMN (WITH MEMORY SEAT)

MY 1986-1990 ①

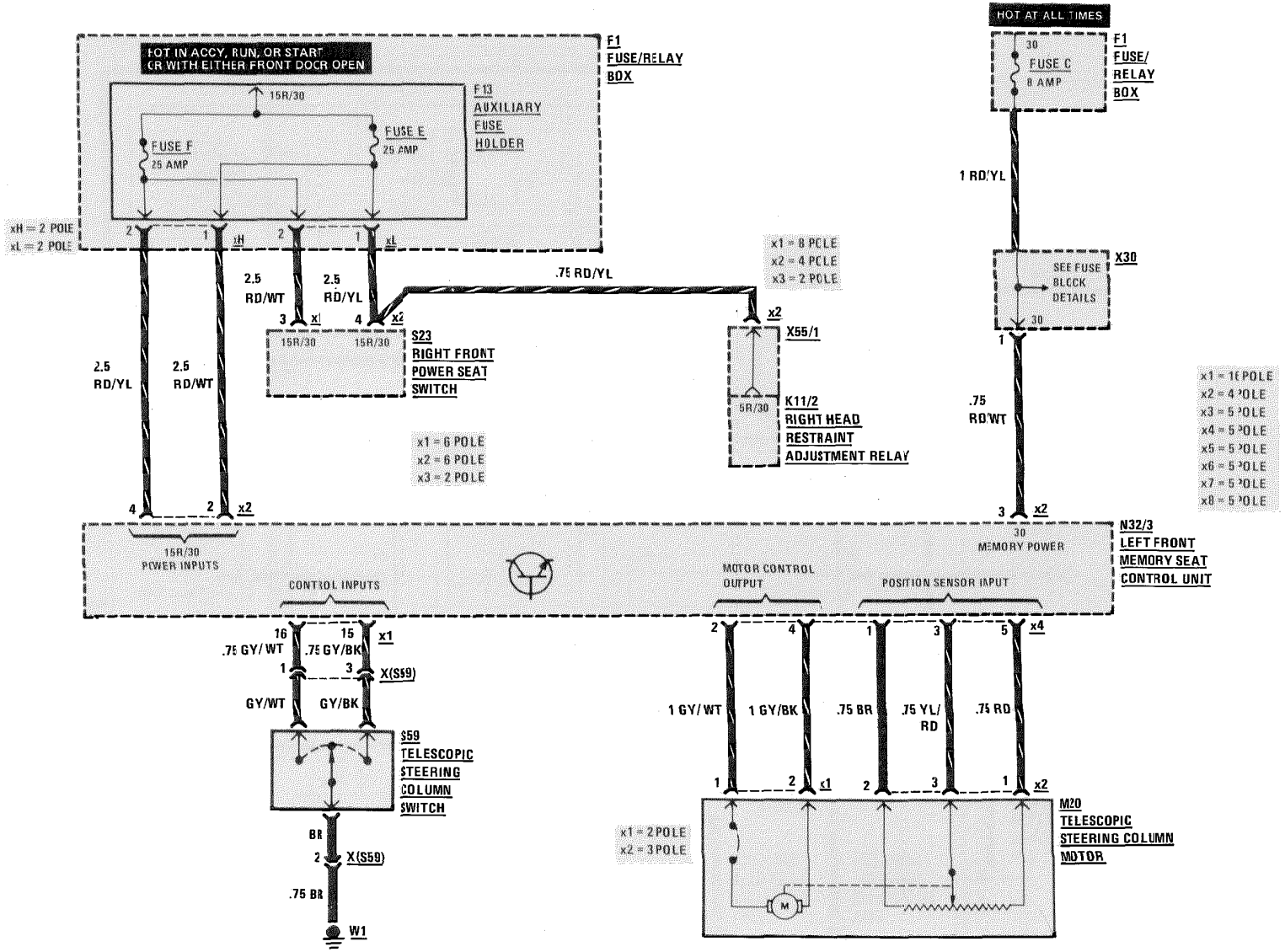

REVISIONS: ① AS OF MY 1991, SEE LEFT POWER SEAT (WITH MEMORY)

TELESCOPIC STEERING COLUMN WITHOUT MEMORY SEAT

AS OF MY 1987
260 E/300D 2.5

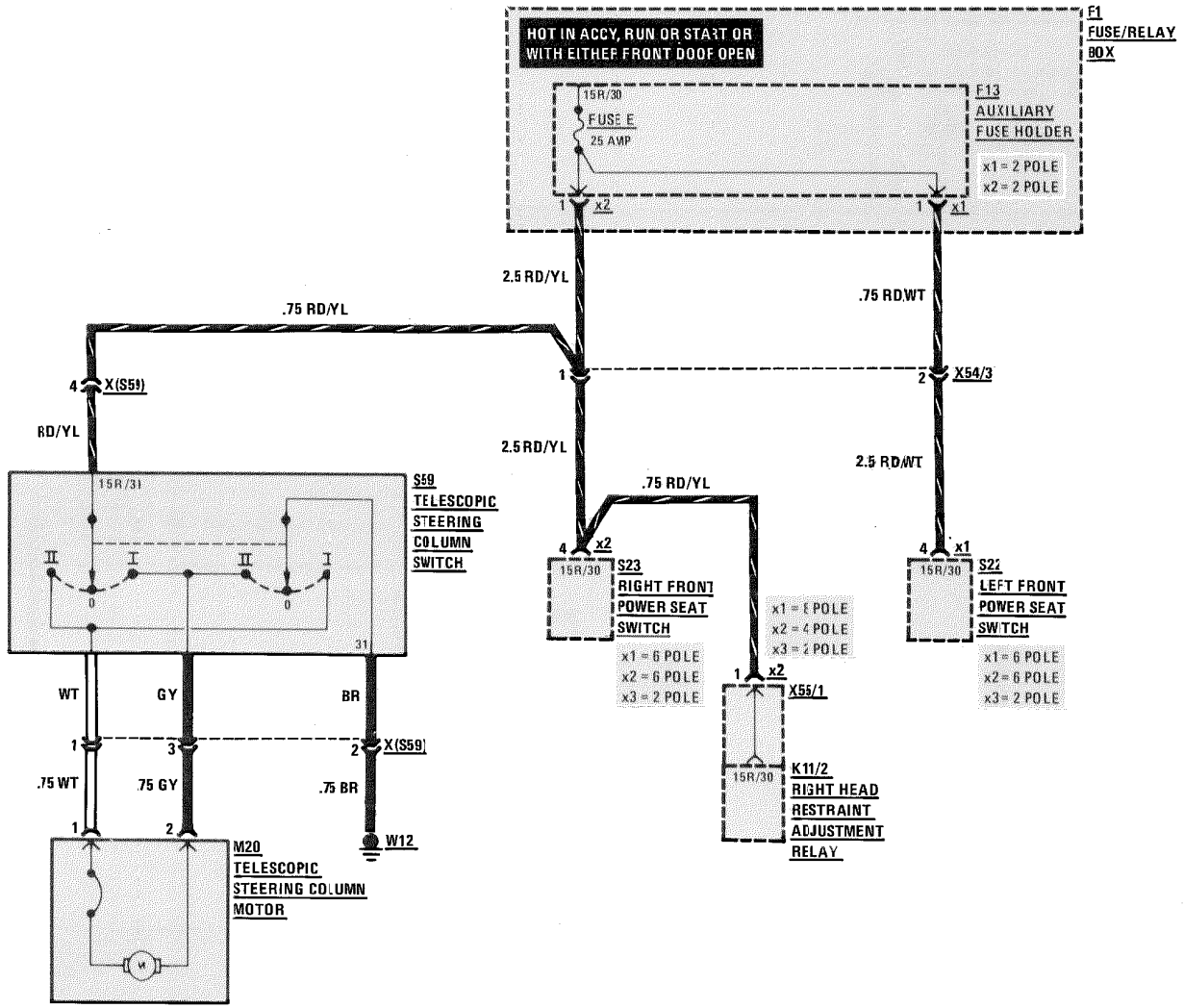

REVISIONS:

POWER SEATS (WITH MEMORY)

MY 1986-1988

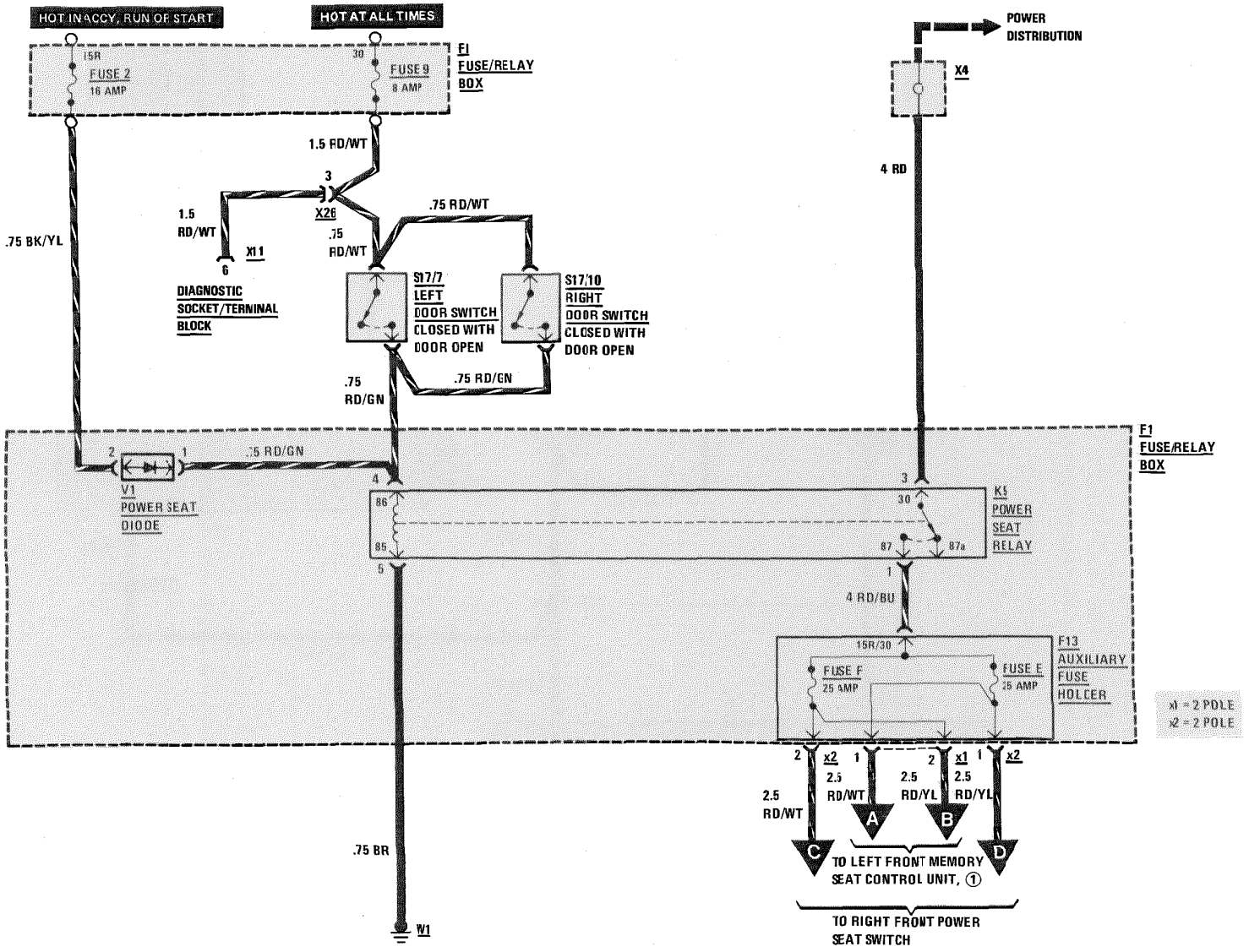

REVISIONS: ① TO LEFT FRONT POWER SEAT SWITCH IN MODELS 124.026/.128

POWER SEAT

MY 1989

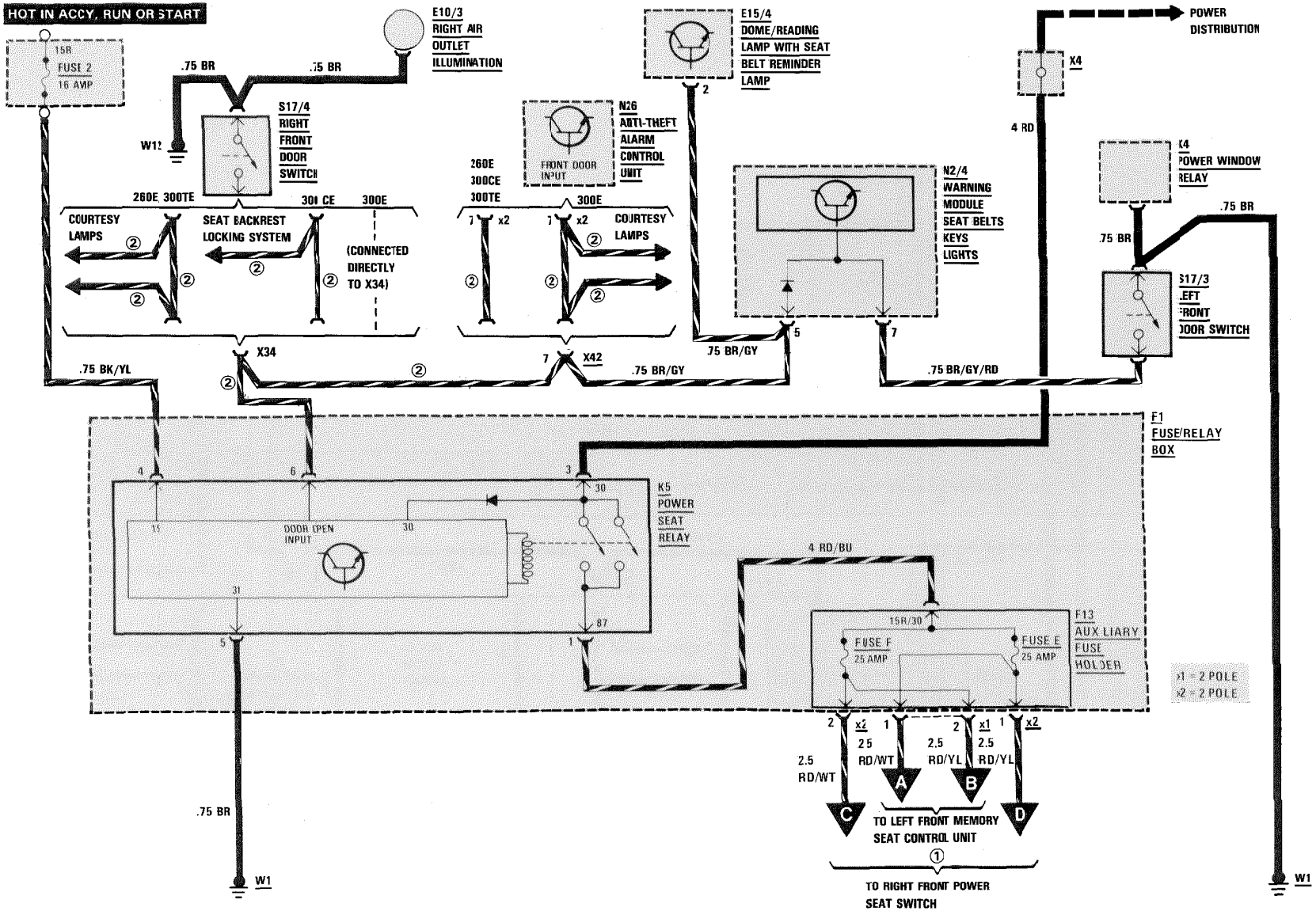

REVISIONS: ① IN 124.026, TO LEFT FRONT POWER SEAT SWITCH
② .75 BR/GY

POWER SEAT

AS OF MY 1990

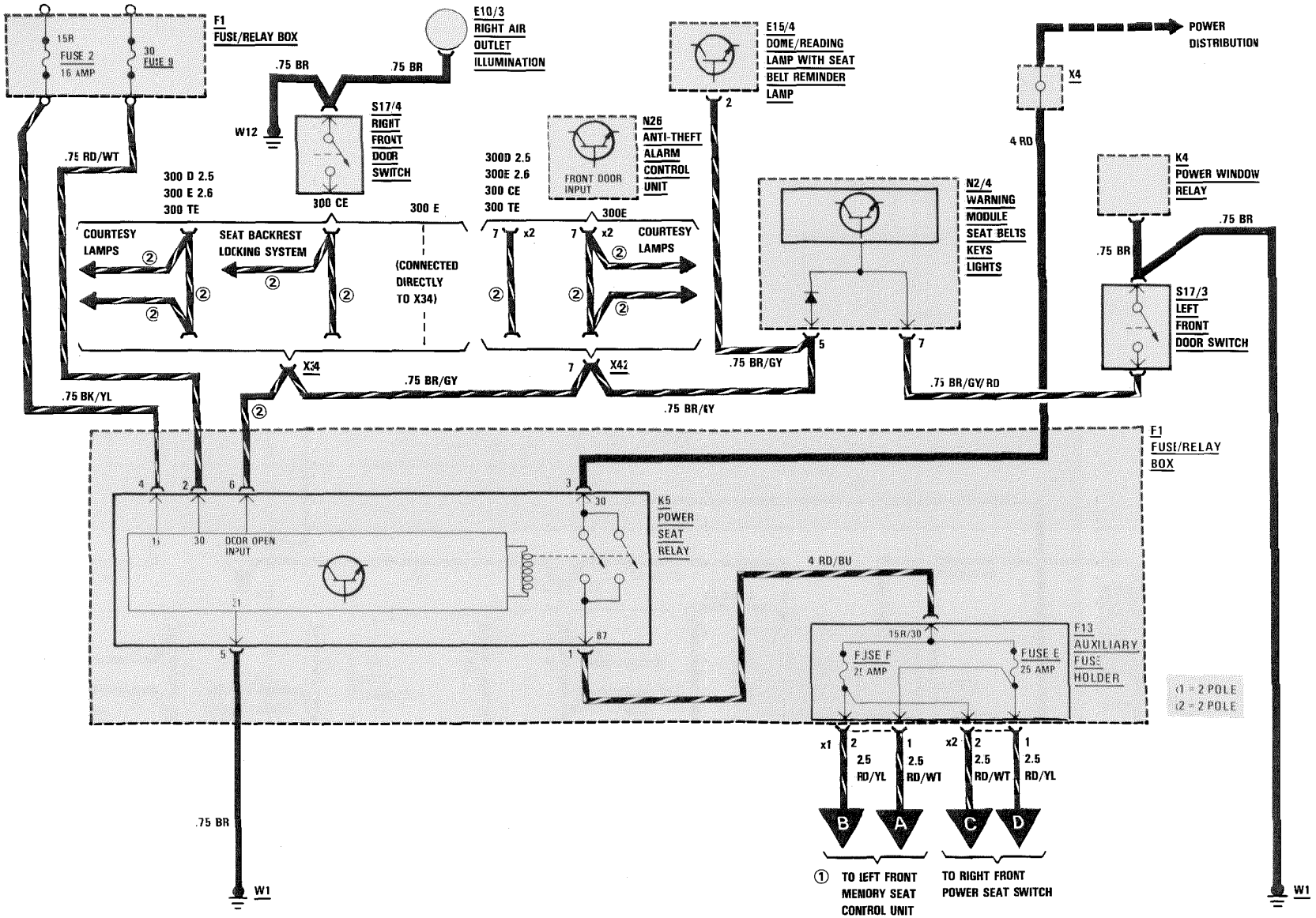

REVISIONS: ① IN 124.026/.128, TO LEFT FRONT POWER SEAT SWITCH
② .75 BR/GY

RIGHT POWER SEAT

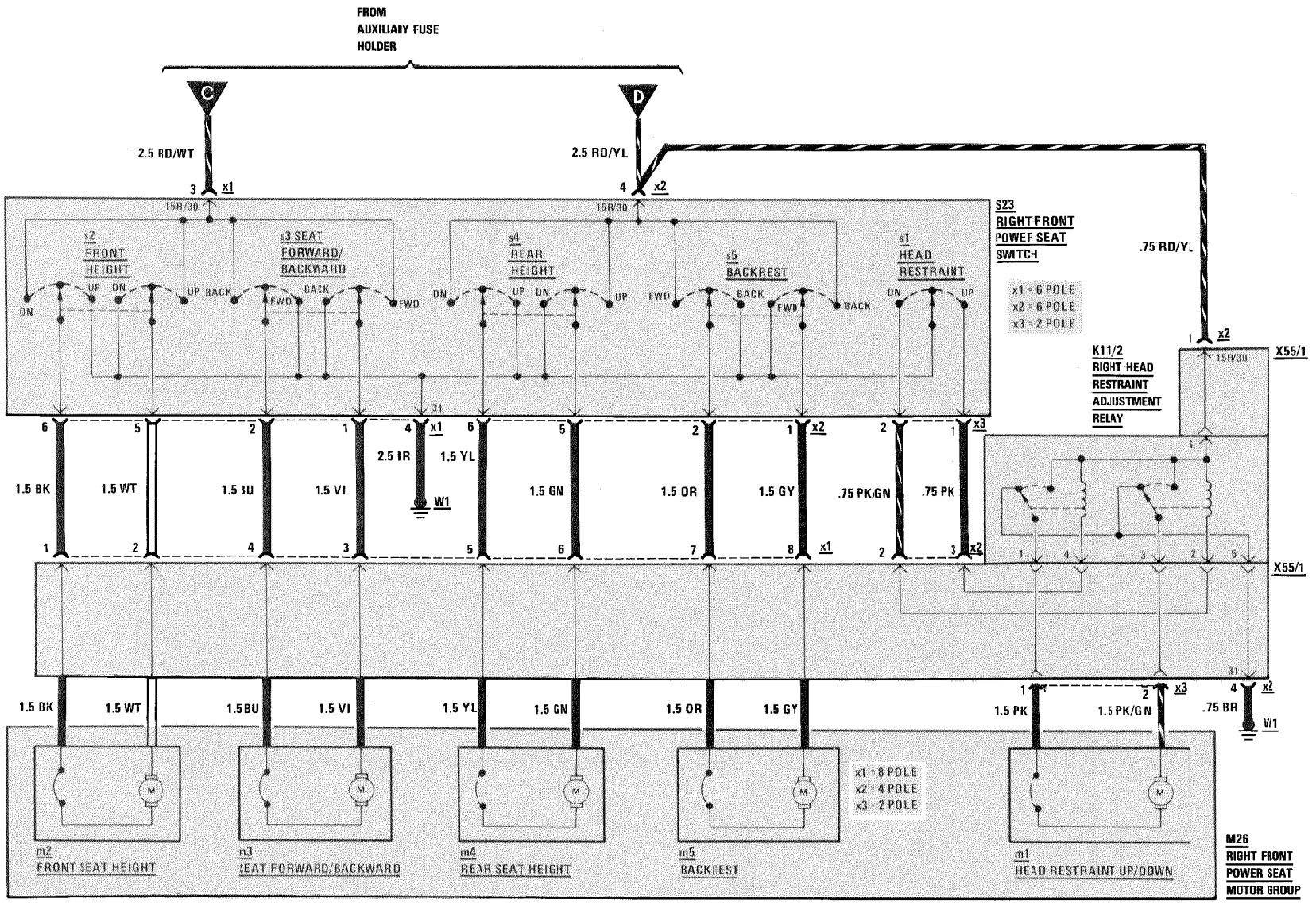

REVISIONS:

RIGHT POWER SEAT

AS OF MY 1991

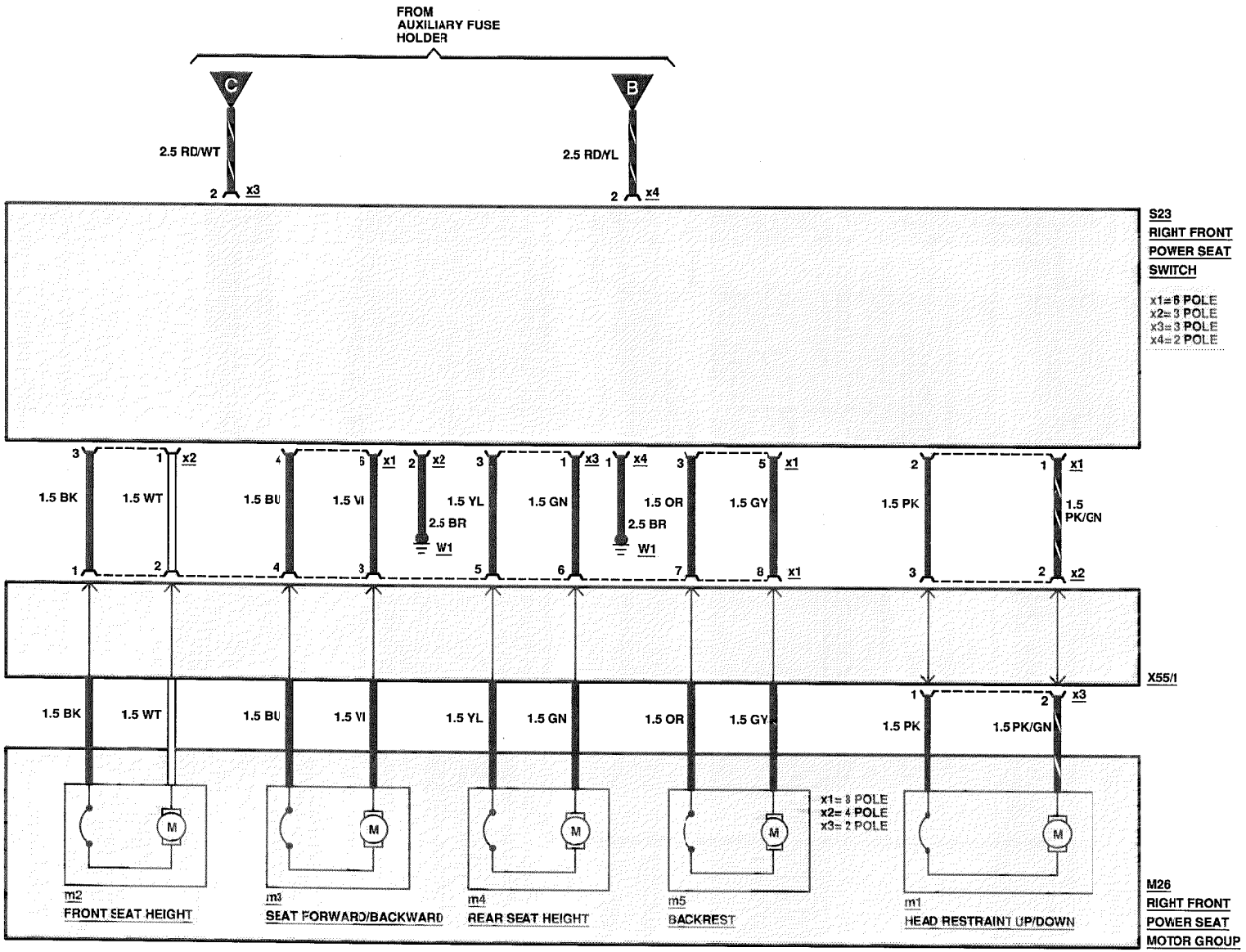

REVISIONS:

LEFT POWER SEAT

MY 1987 - 1990

260E/300D 2.5

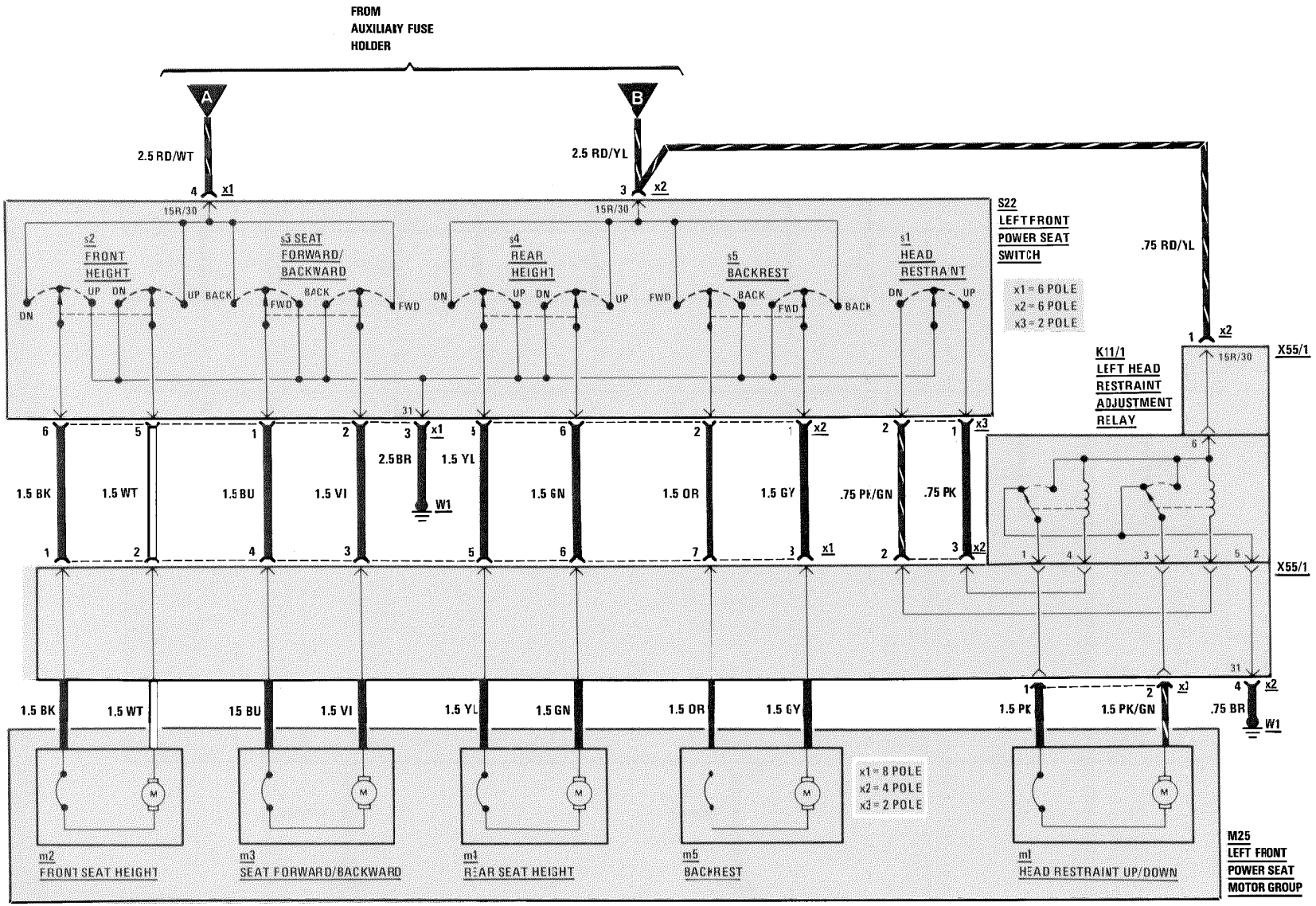

REVISIONS:

LEFT POWER SEAT

AS OF MY 1991

300E 2.6/300D 2.5

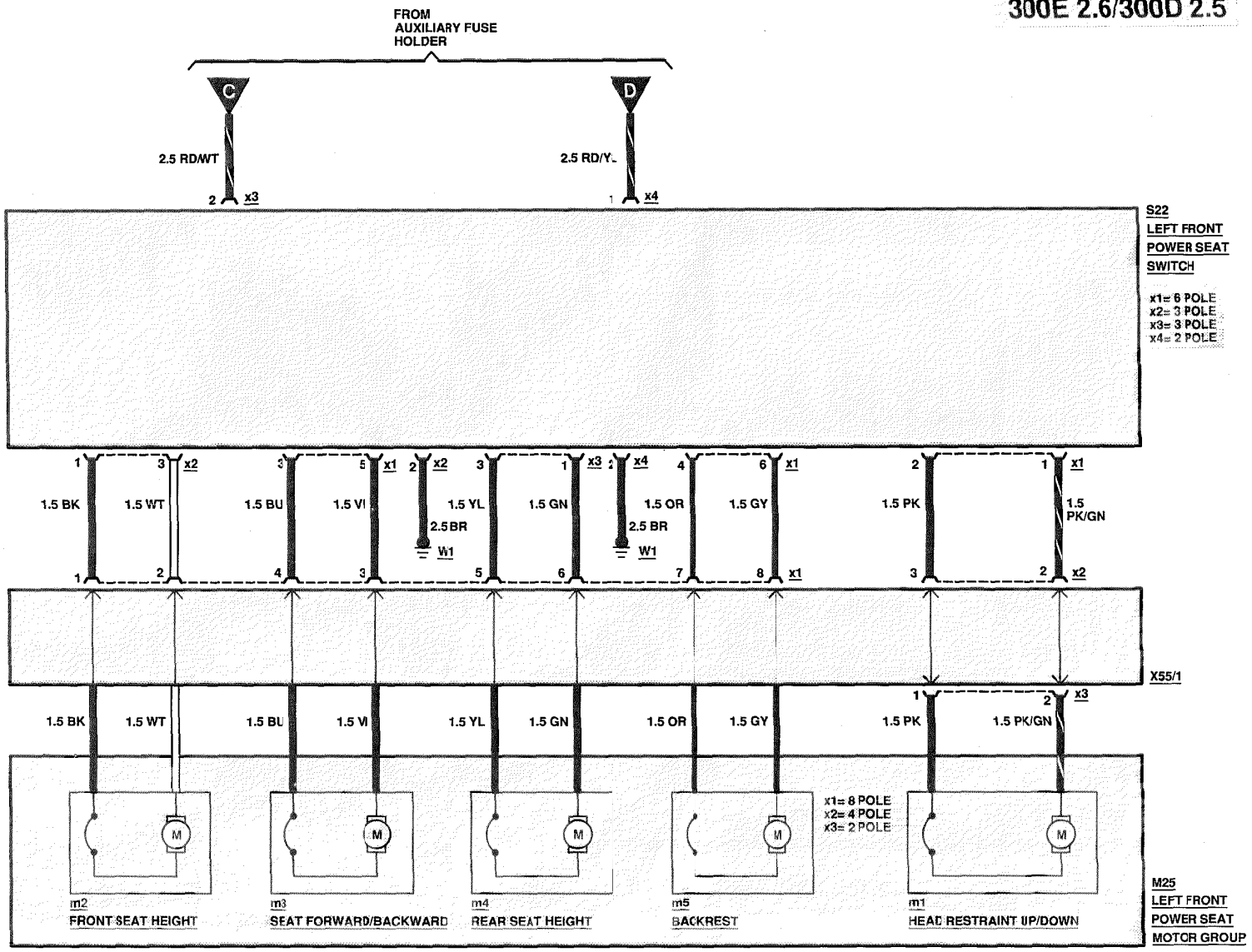

REVISIONS:

LEFT POWER SEAT (WITH MEMORY)

AS OF MY 1986

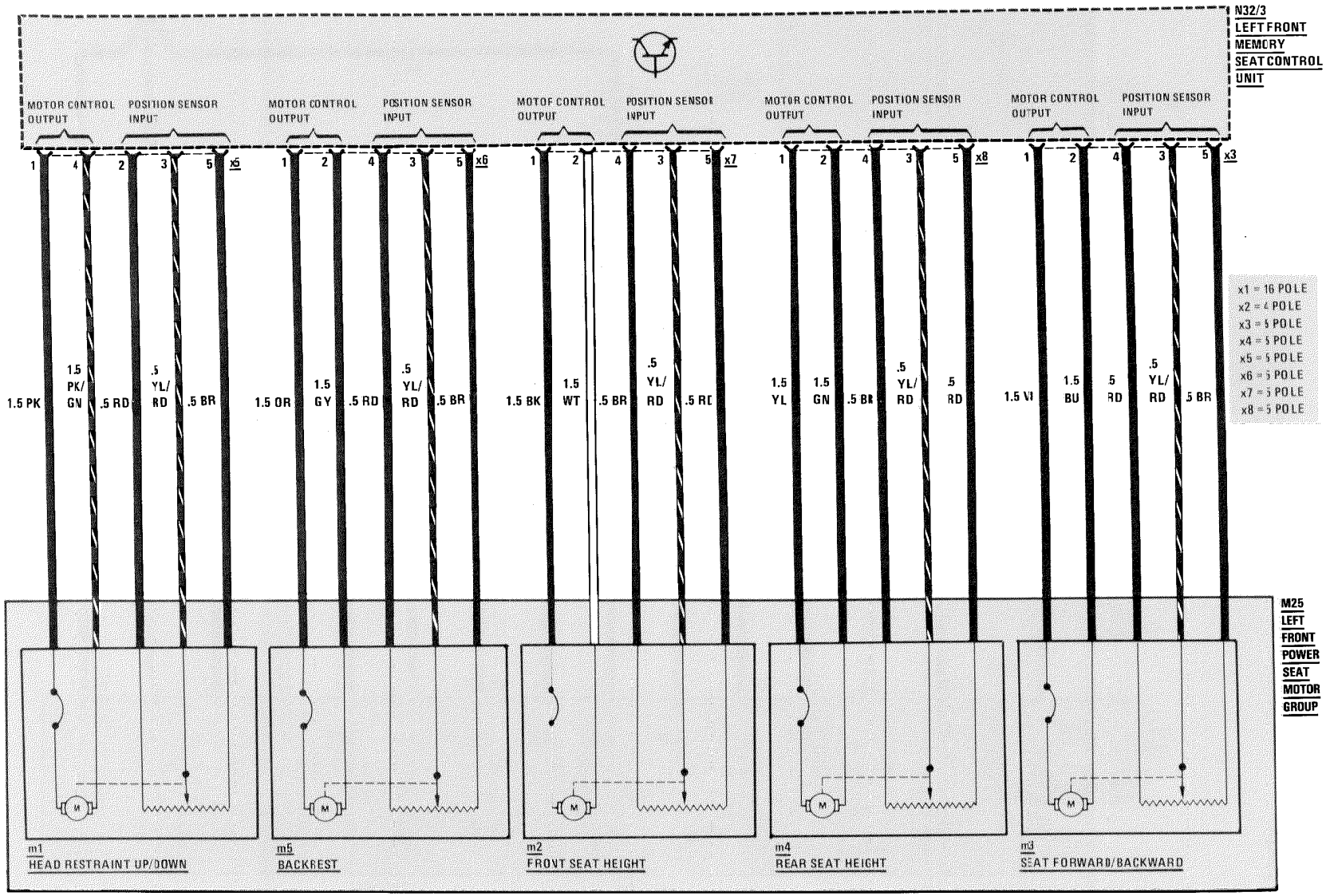

REVISIONS:

LEFT POWER SEAT (WITH MEMORY)

MY 1986-1990

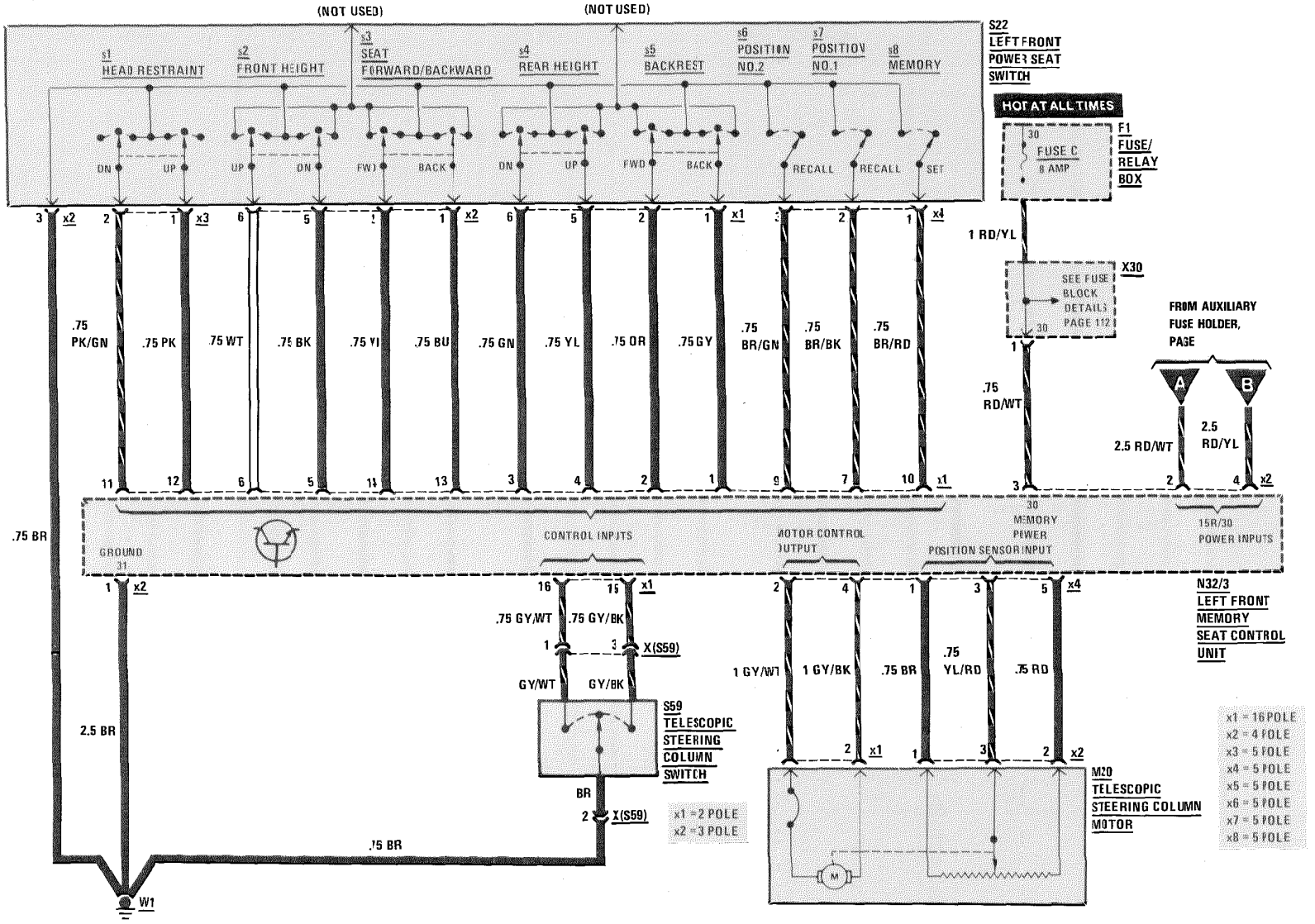

REVISIONS:

LEFT POWER SEAT (WITH MEMORY)

AS OF MY 1991

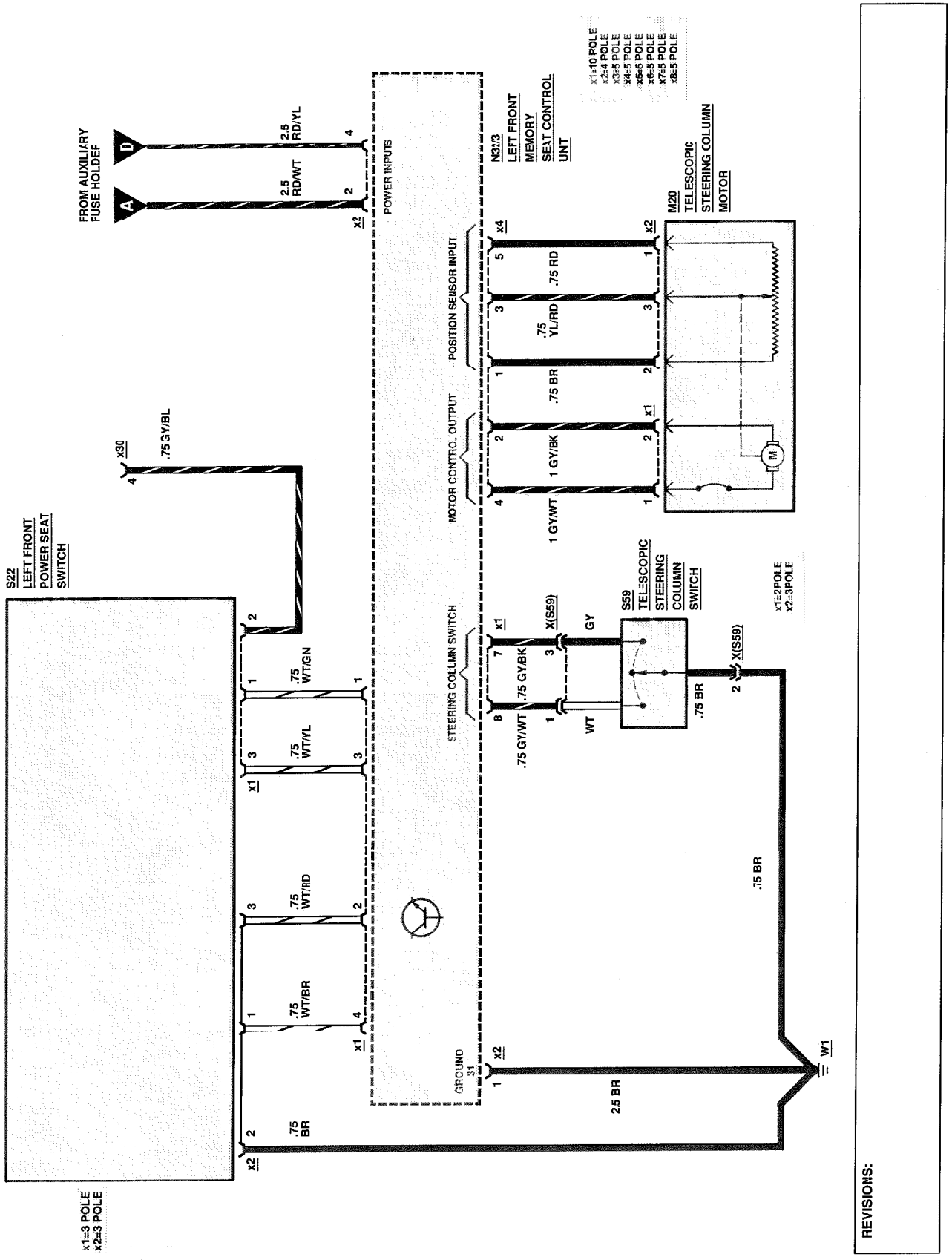

REVISIONS:

OUTSIDE HEATED MIRRORS

AS OF MY 1986

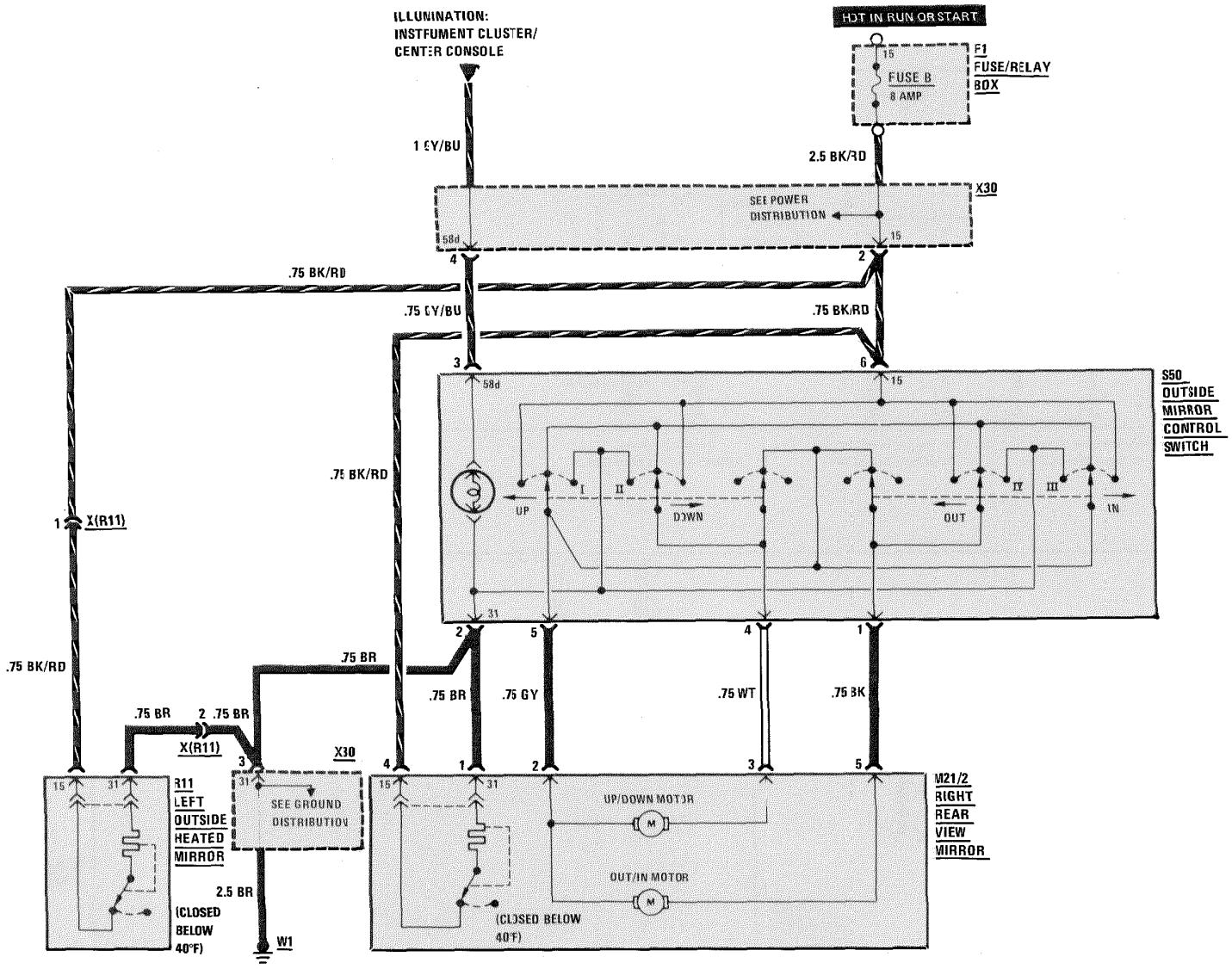

REVISIONS:

ANTI-LOCK BRAKE SYSTEM (ABS)

AS OF MY 1986

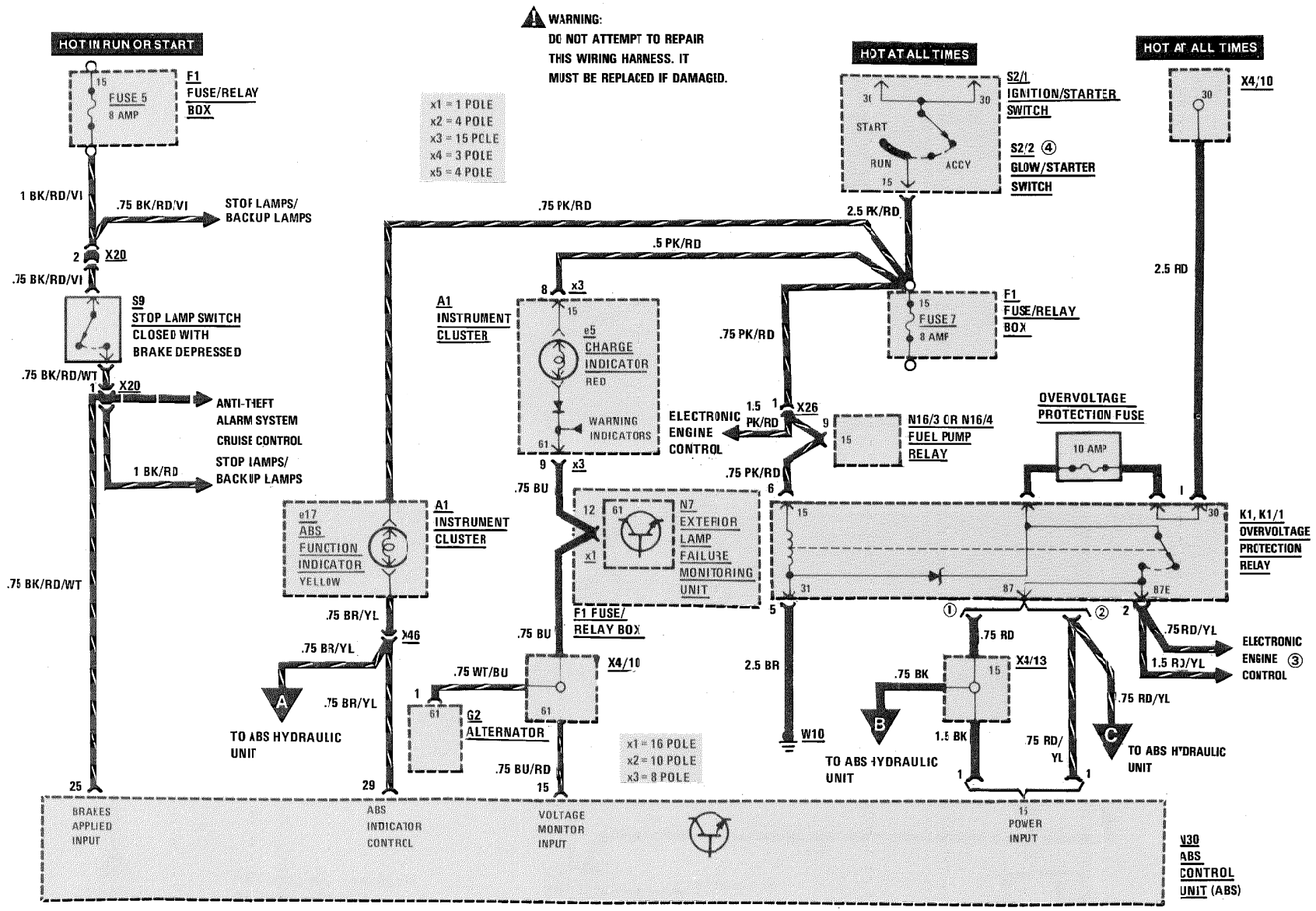

REVISIONS: ① MY 1986 AND 1987, CONNECTED TO PIN 4; AS OF MY 1988 CALIF., CONNECTED TO PIN 7
② AS OF MY 1988 FEDERAL, CONNECTED TO PIN 7
③ ELECTRONIC DIESEL SYSTEM IN DIESEL MODELS
④ DIESEL MODELS

ANTI-LOCK BRAKE SYSTEM

AS OF MY 1986

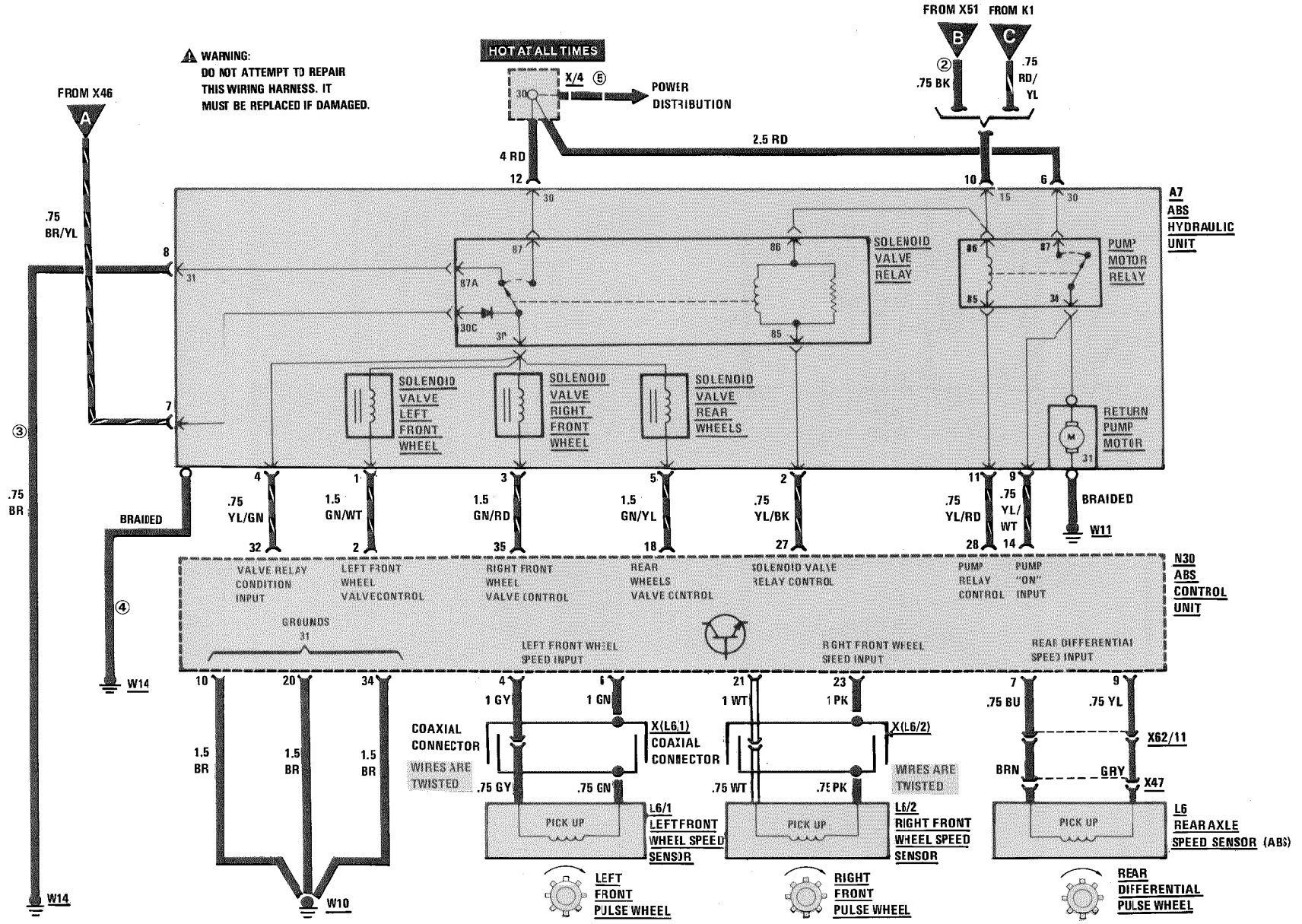

REVISIONS: ① AS OF MY 1988 FEDERAL VERSION ⑤ AS OF MY 1990
② AS OF MY 1986 CALIFORNIA VERSION
③ MY 1986 ONLY
④ AS OF MY 1987

ANTI-LOCK BRAKE SYSTEM (ABS)

AS OF MY 1992
400E/500E

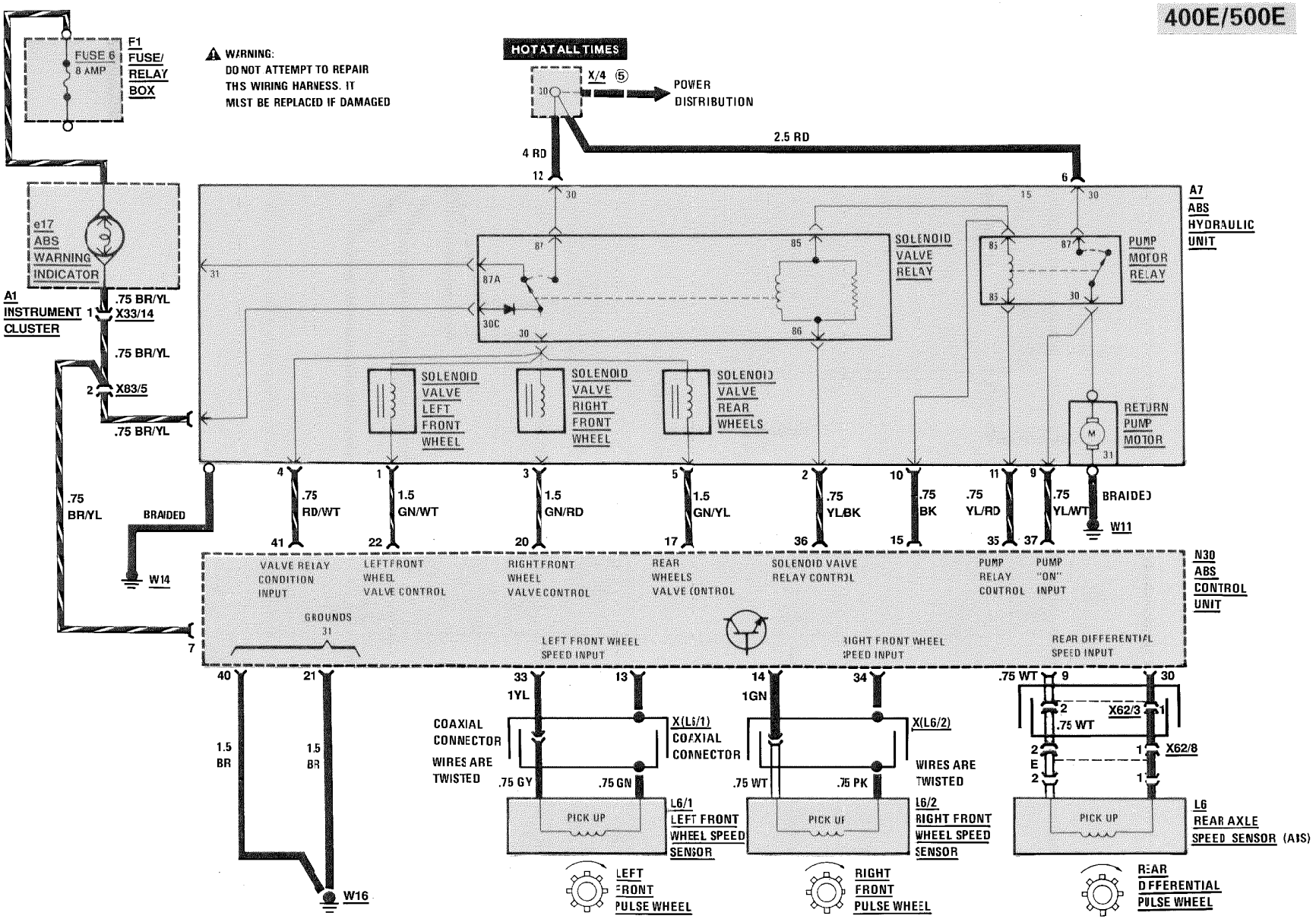

REVISIONS: ① AS OF MY 1988 FEDERAL VERSION ⑤ AS OF MY 1990
② AS OF MY 1986 CALIFORNIA VERSION
③ MY 1986 ONLY
④ AS OF MY 1987

ANTI-LOCK BRAKE SYSTEM (ABS)

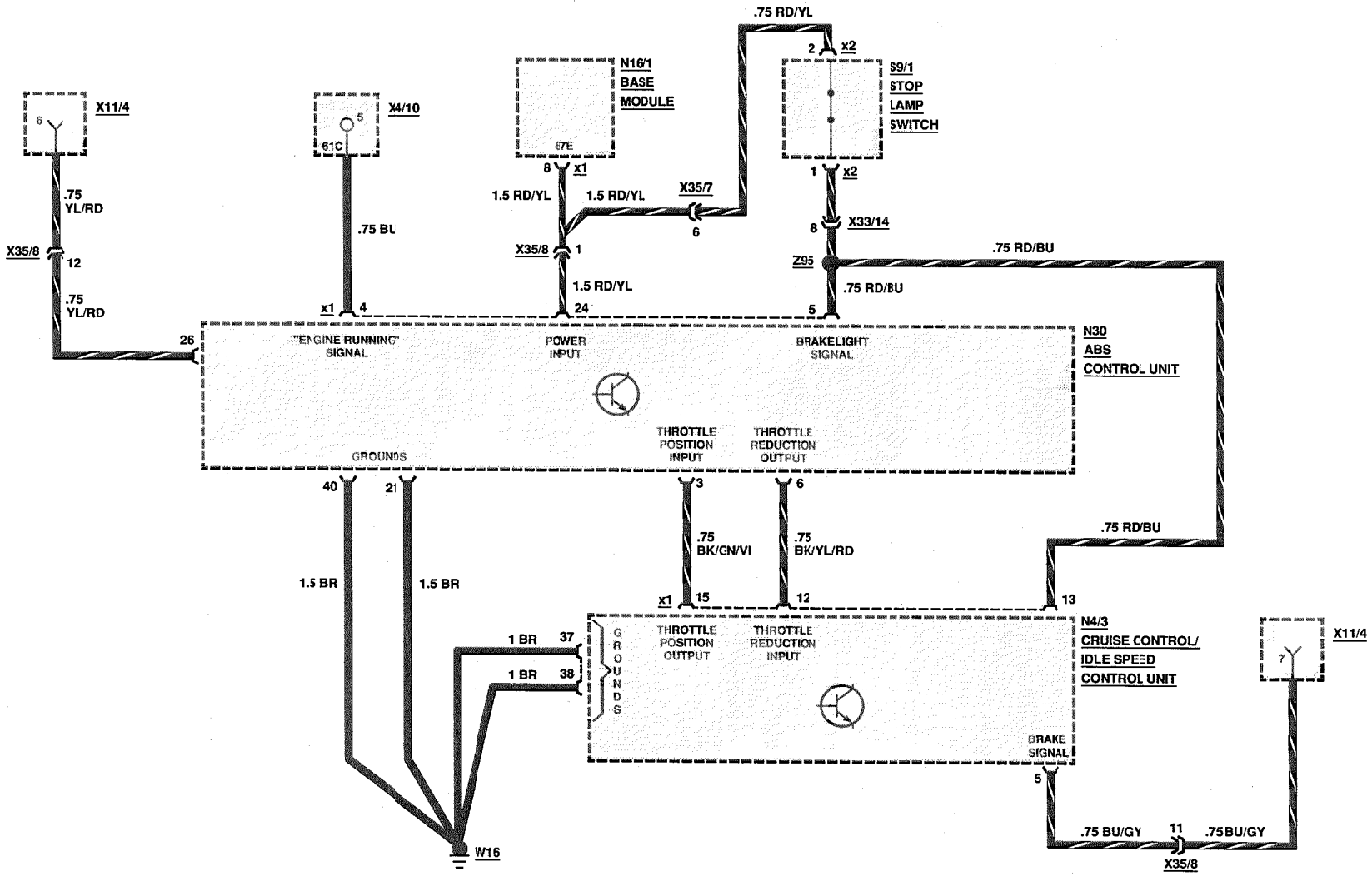

REVISIONS:

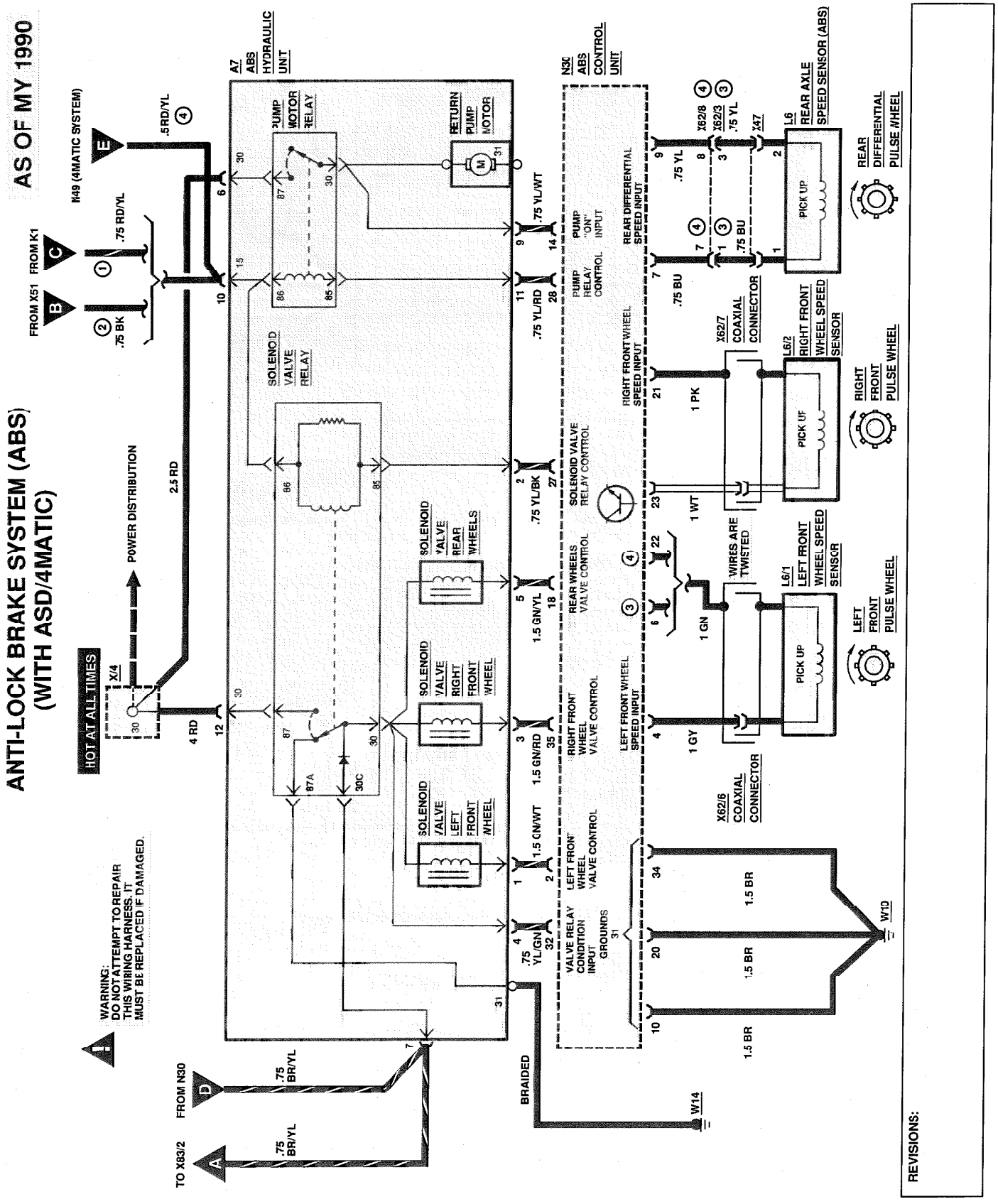
ANTI-LOCK BRAKE SYSTEM (ABS)
(WITH ASD/4MATIC)
AS OF MY 1990
WARNING:
DO NOT ATTEMPT TO REPAIR
THIS WIRING HARNESS. IT
MUST BE REPLACED IF DAMAGED.
HOT AT ALL TIMES
X/4
POWER DISTRIBUTION
2.5 RD
4 RD
.5RD/YL
.75 RD/YL
.75 BK
FROM X51
FROM K1
N49 (4MATIC SYSTEM)
A7
ABS
HYDRAULIC
UNIT
JUMP
MOTOR
RELAY
RETURN
PUMP
MOTOR
SOLENOID
VALVE
RELAY
SOLENOID
VALVE
REAR
WHEELS
SOLENOID
VALVE
RIGHT
FRONT
WHEEL
SOLENOID
VALVE
LEFT
FRONT
WHEEL
.75 YL/WT
.75 YL/RD
.75 YL/BK
1.5 GN/YL
1.5 GN/RD
1.5 GN/WT
.75 YL/GN
N30
ABS
CONTROL
UNIT
PUMP
RELAY
CONTROL
PUMP
"ON"
INPUT
REAR DIFFERENTIAL
SPEED INPUT
RIGHT FRONT WHEEL
SPEED INPUT
LEFT FRONT WHEEL
SPEED INPUT
REAR WHEELS
VALVE CONTROL
SOLENOID VALVE
RELAY CONTROL
RIGHT FRONT
WHEEL
VALVE CONTROL
LEFT FRONT
WHEEL
VALVE CONTROL
VALVE RELAY
CONDITION
INPUT
GROUNDS
31
.75 BU
1 PK
1 WT
1 GN
1 GY
.75 YL
X62/7
COAXIAL
CONNECTOR
X62/6
COAXIAL
CONNECTOR
X62/8
X62/3
X47
L6/2
RIGHT FRONT
WHEEL SPEED
SENSOR
L6/1
LEFT FRONT
WHEEL SPEED
SENSOR
L6
REAR AXLE
SPEED SENSOR (ABS)
PICK UP
WIRES ARE
TWISTED
RIGHT
FRONT
PULSE WHEEL
LEFT
FRONT
PULSE WHEEL
REAR
DIFFERENTIAL
PULSE WHEEL
1.5 BR
BRAIDED
.75 BR/YL
FROM N30
TO X83/2
W14
W10
REVISIONS:

ANTI-LOCK BRAKE SYSTEM (ABS) (WITH ASD/4MATIC)

AS OF MY 1990

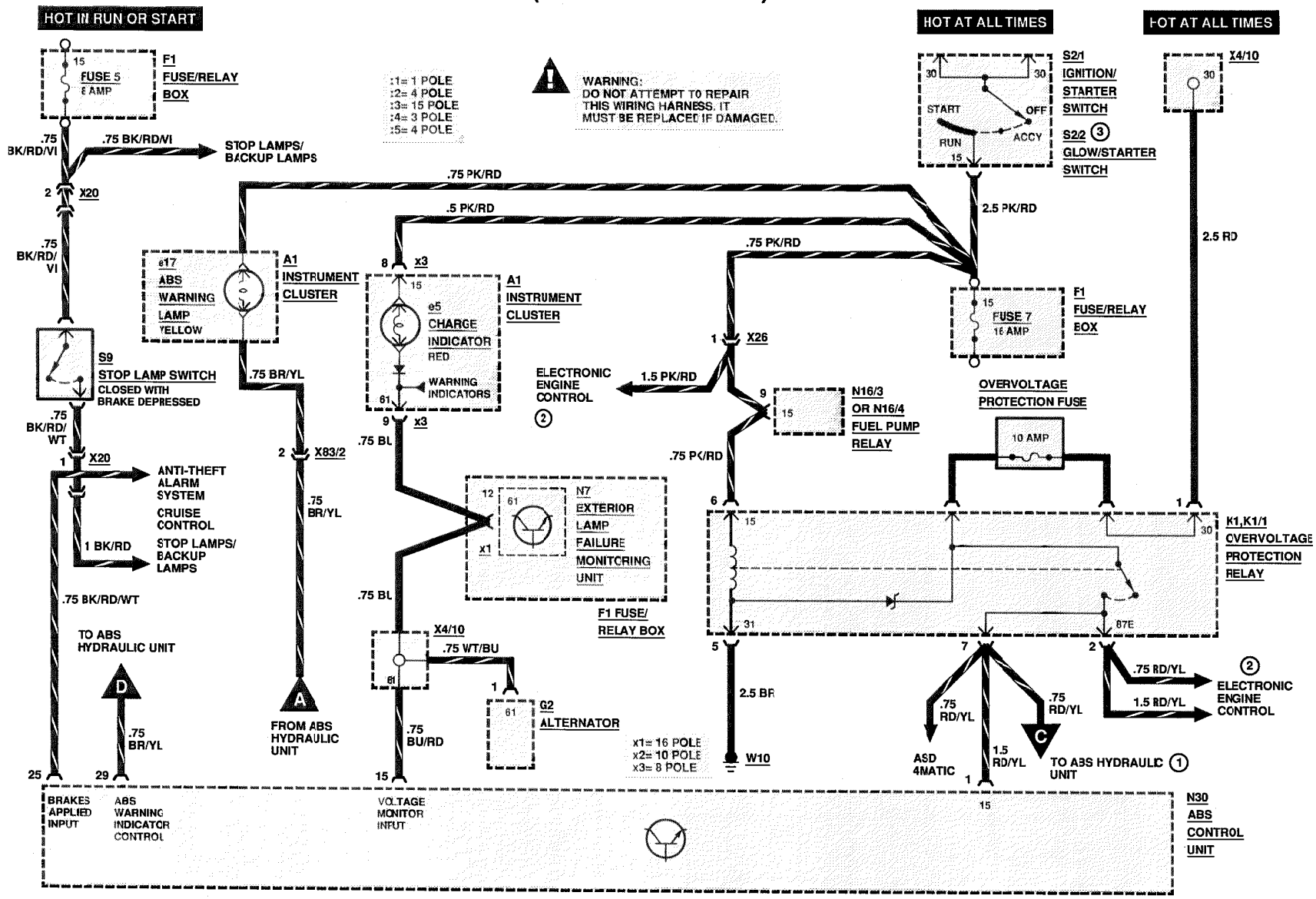

REVISIONS:
(1) FEDERAL VERSION
(2) ELECTRONIC DIESEL SYSTEM, DIESEL MODELS
(3) DIESEL MODELS

ANTI-LOCK BRAKE SYSTEM (ABS) (WITH ASR)

AS OF MY 1991

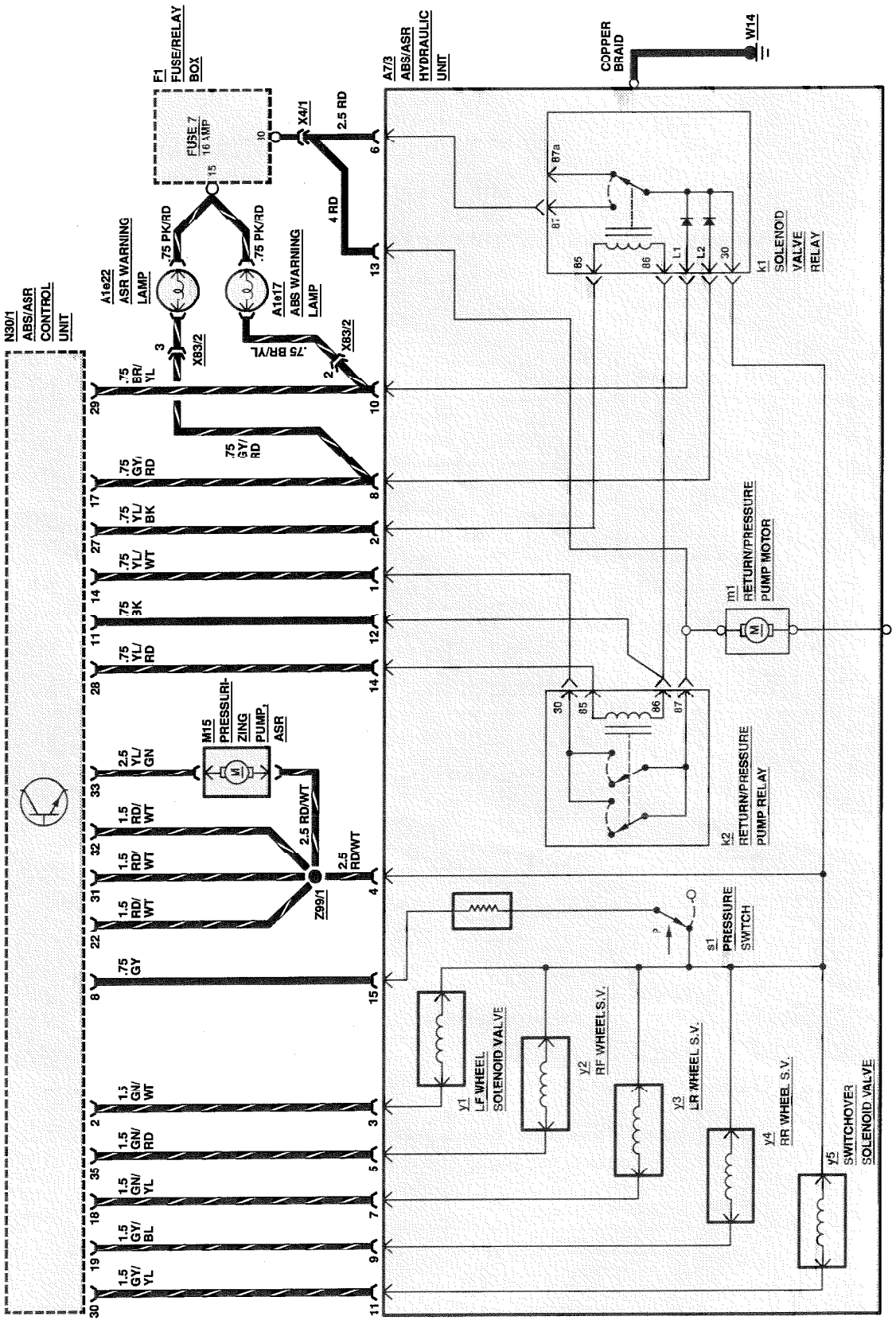

REVISIONS:

ANTI-LOCK BRAKE SYSTEM (ABS) (WITH ASR)

AS OF MY 1991

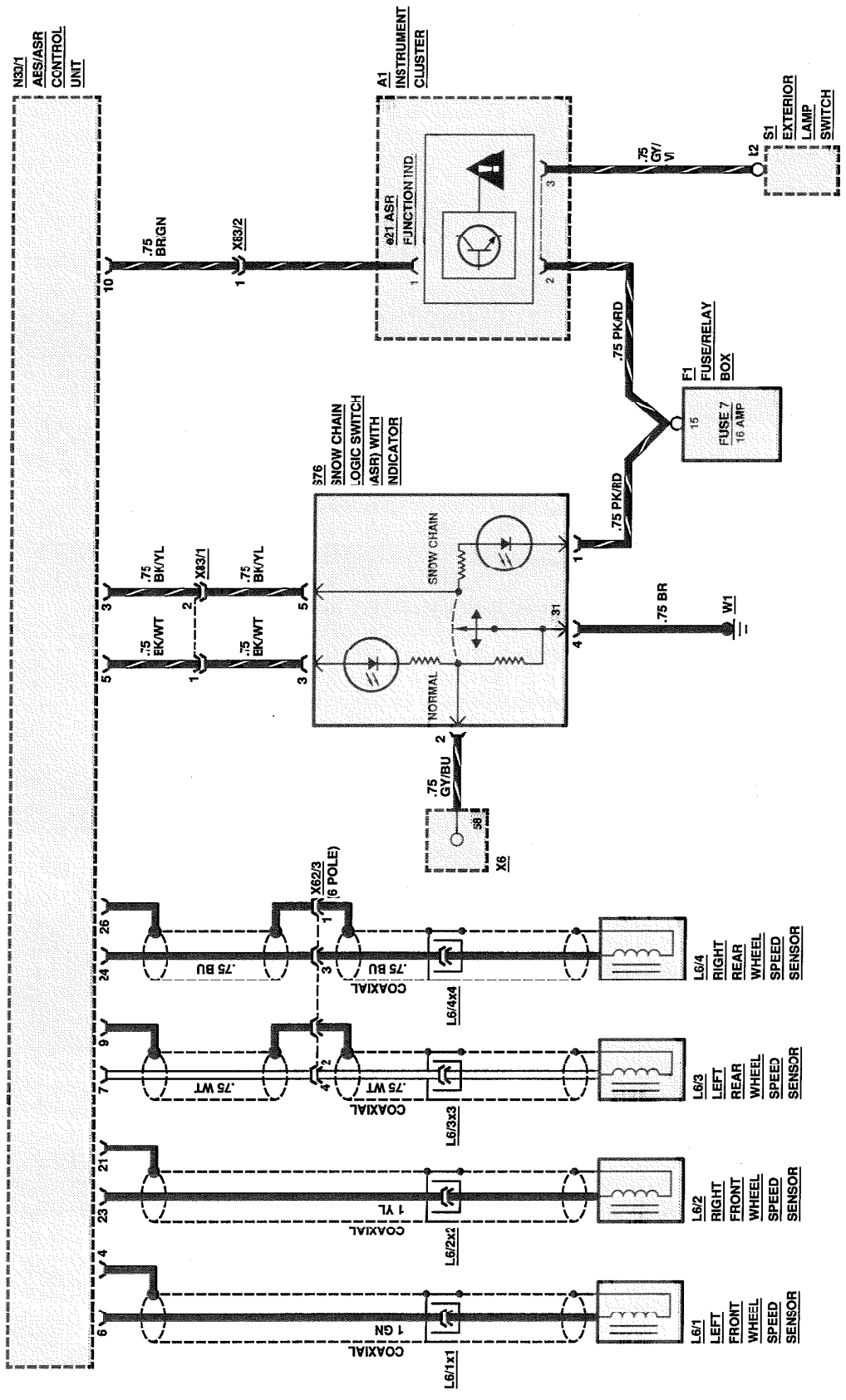

REVISIONS:

ANTI-LOCK BRAKE SYSTEM (ABS) (WITH ASR)

AS OF MY 1992

400E/500E

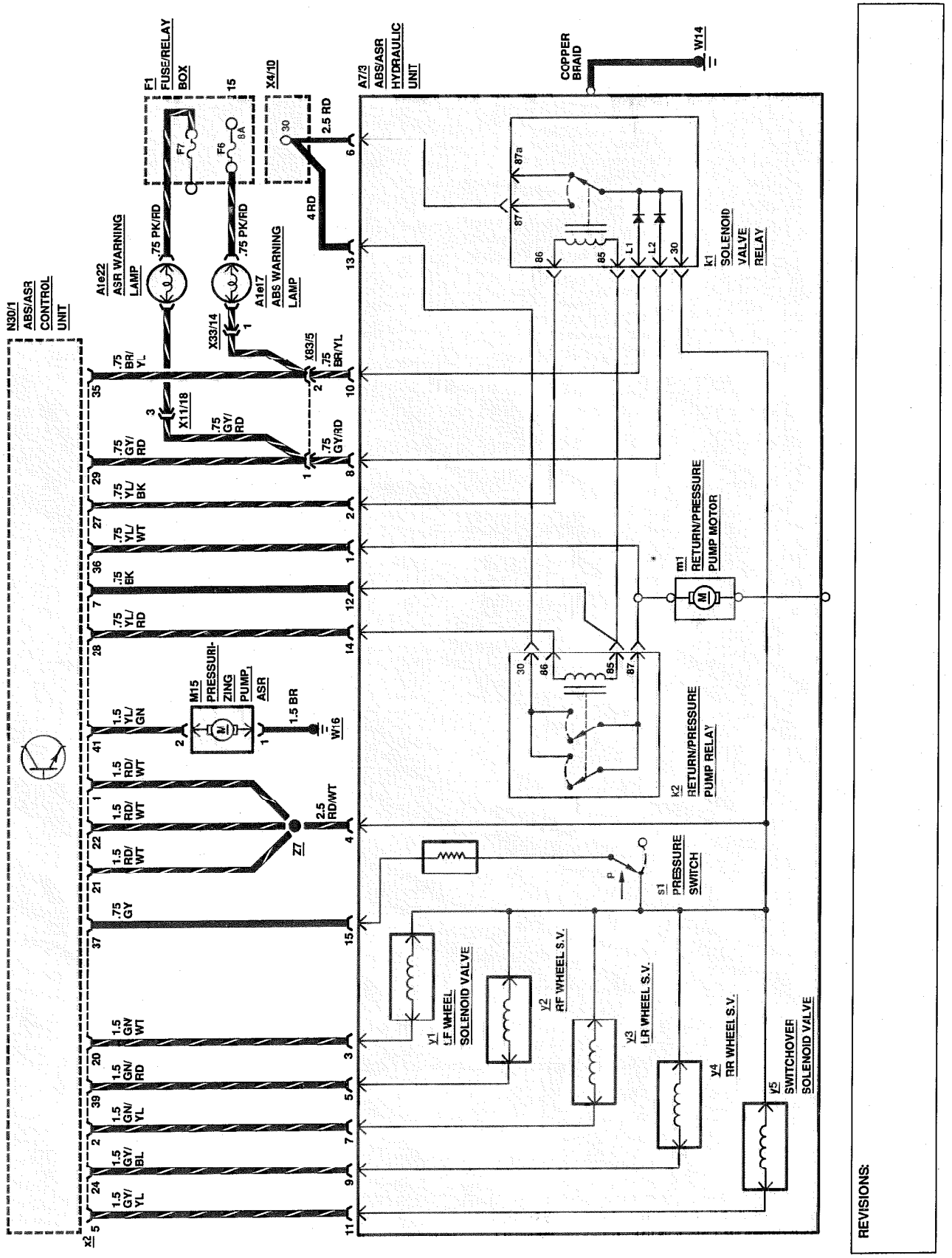

ANTI-LOCK BRAKE SYSTEM (ABS) (WITH ASR)

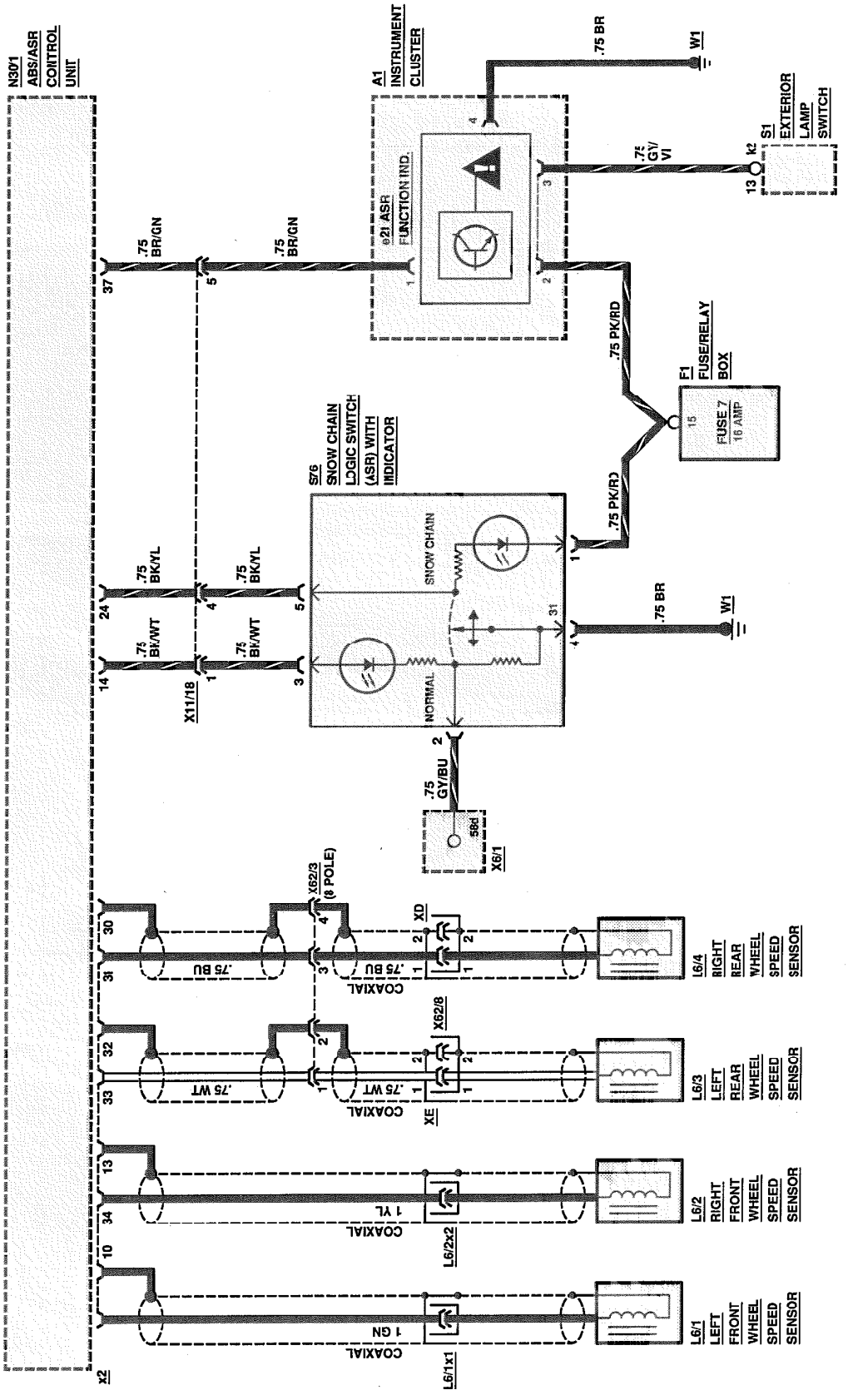

REVISIONS:

ANTI-LOCK BRAKE SYSTEM (ABS)
(WITH ASR/ELECTRONIC ACCELERATION SYSTEM)

AS OF MY 1991

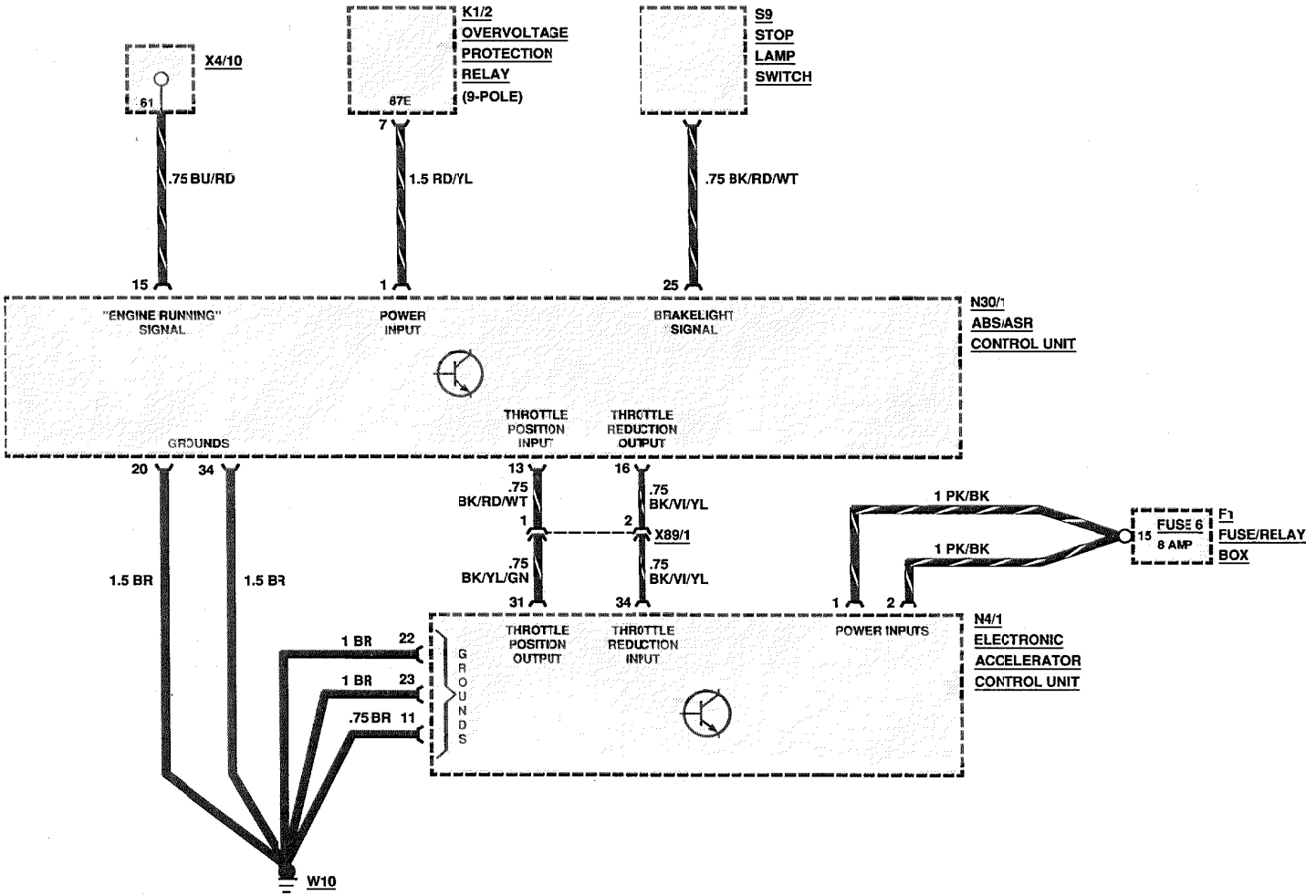

REVISIONS:

ANTI-LOCK BRAKE SYSTEM (ABS)
(WITH ASR/ELECTRONIC ACCELERATOR SYSTEM)

AS OF MY 1992
400E/500E

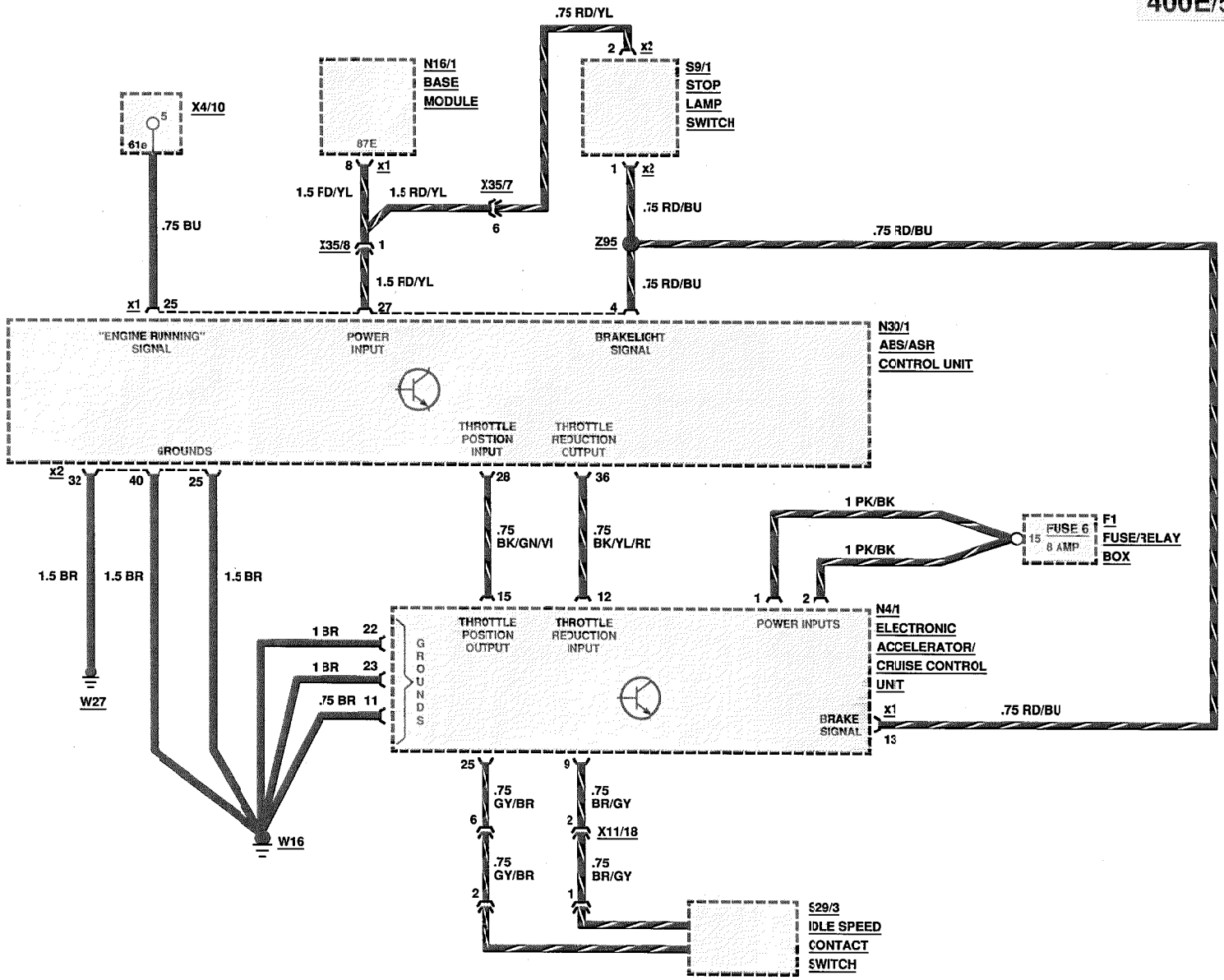

REVISIONS:

AUTOMATIC LOCKING DIFFERENTIAL (ASD)

AS OF MY 1991

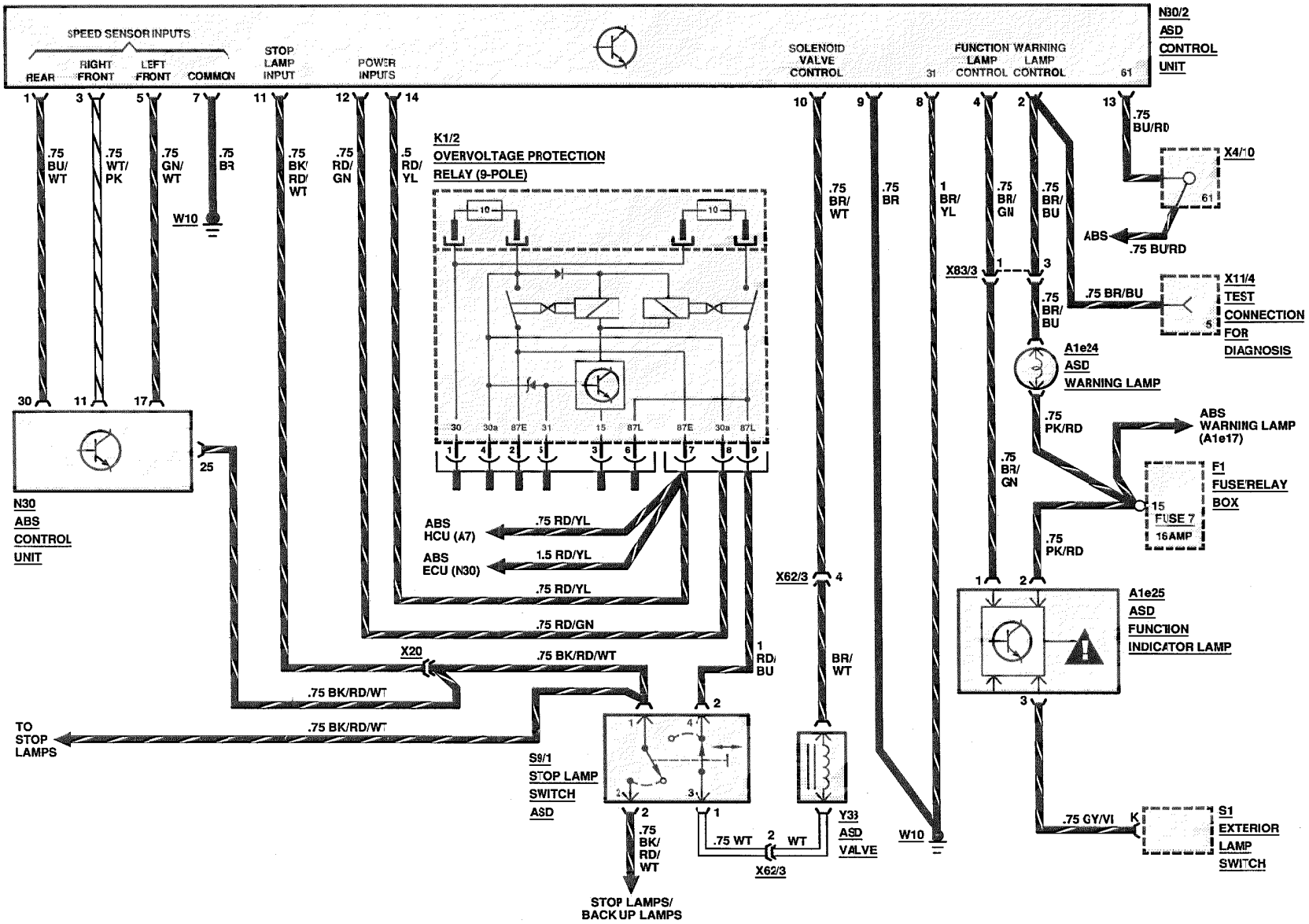

REVISIONS:

THIS PAGE INTENTIONALLY LEFT BLANK

REVISIONS:

4MATIC SYSTEM

MY 1990 TO MY 1991

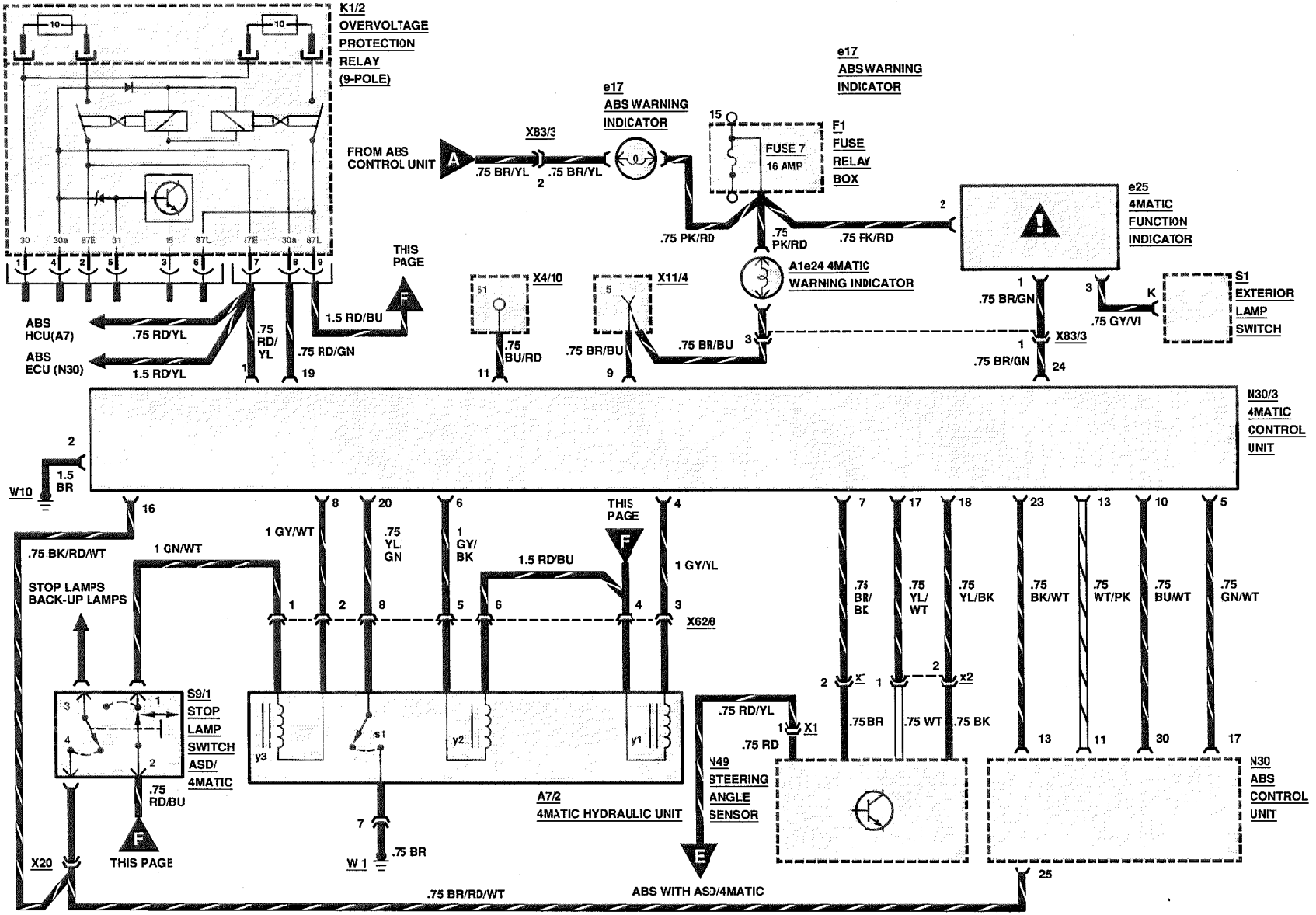

REVISIONS:

4MATIC SYSTEM

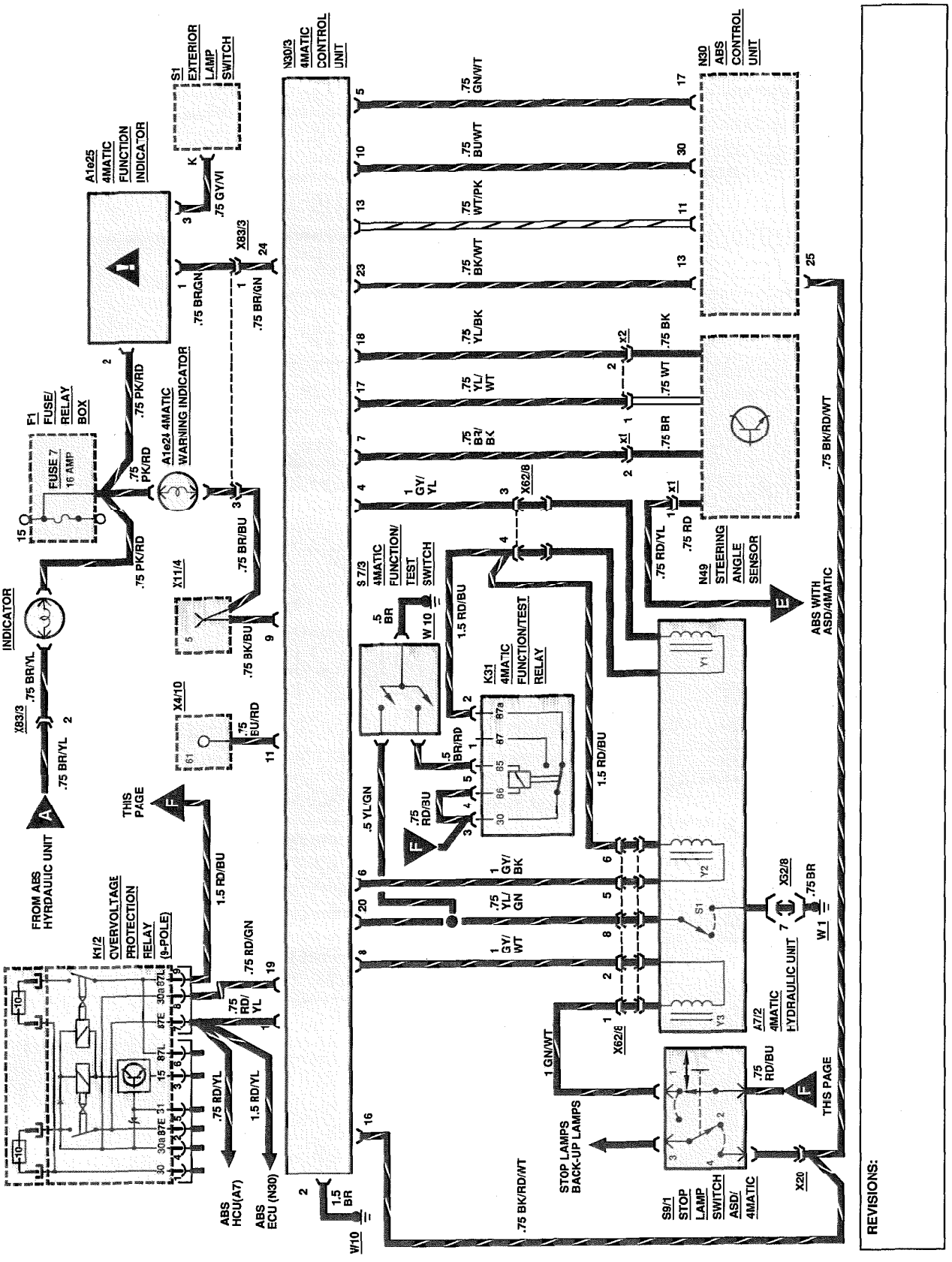

ORTHOPEDIC SEATS

AS OF MY 1986

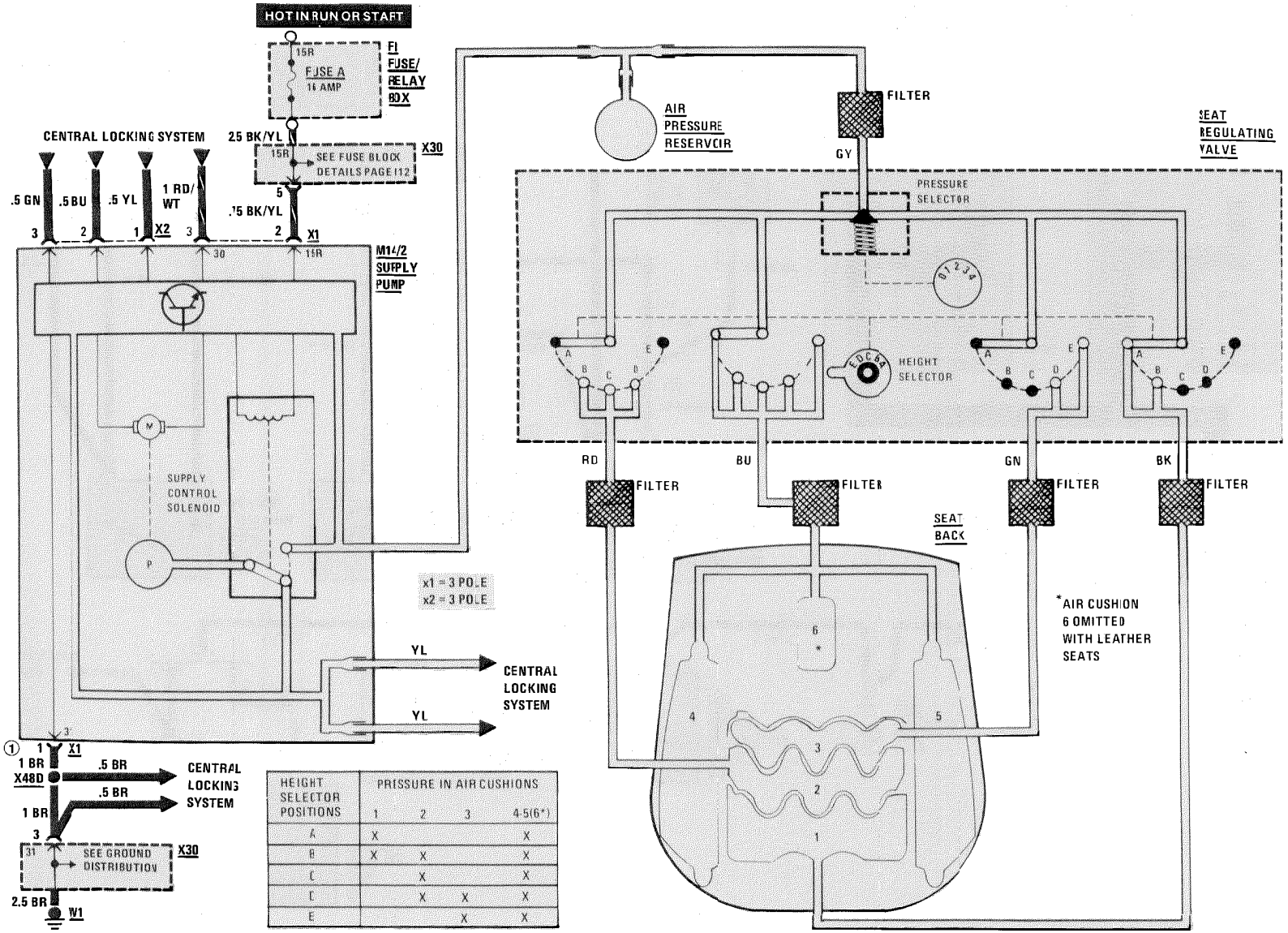

HEIGHT SELECTOR POSITIONS	PRESSURE IN AIR CUSHIONS			
	1	2	3	4-5(6*)
A	X			X
B	X	X		X
C		X		X
D		X	X	X
E			X	X

REVISIONS: ① AS OF MY 1991, GROUNDED DIRECTLY TO W12

SEAT BACKREST LOCKING SYSTEM

AS OF MY 1988

300 CE

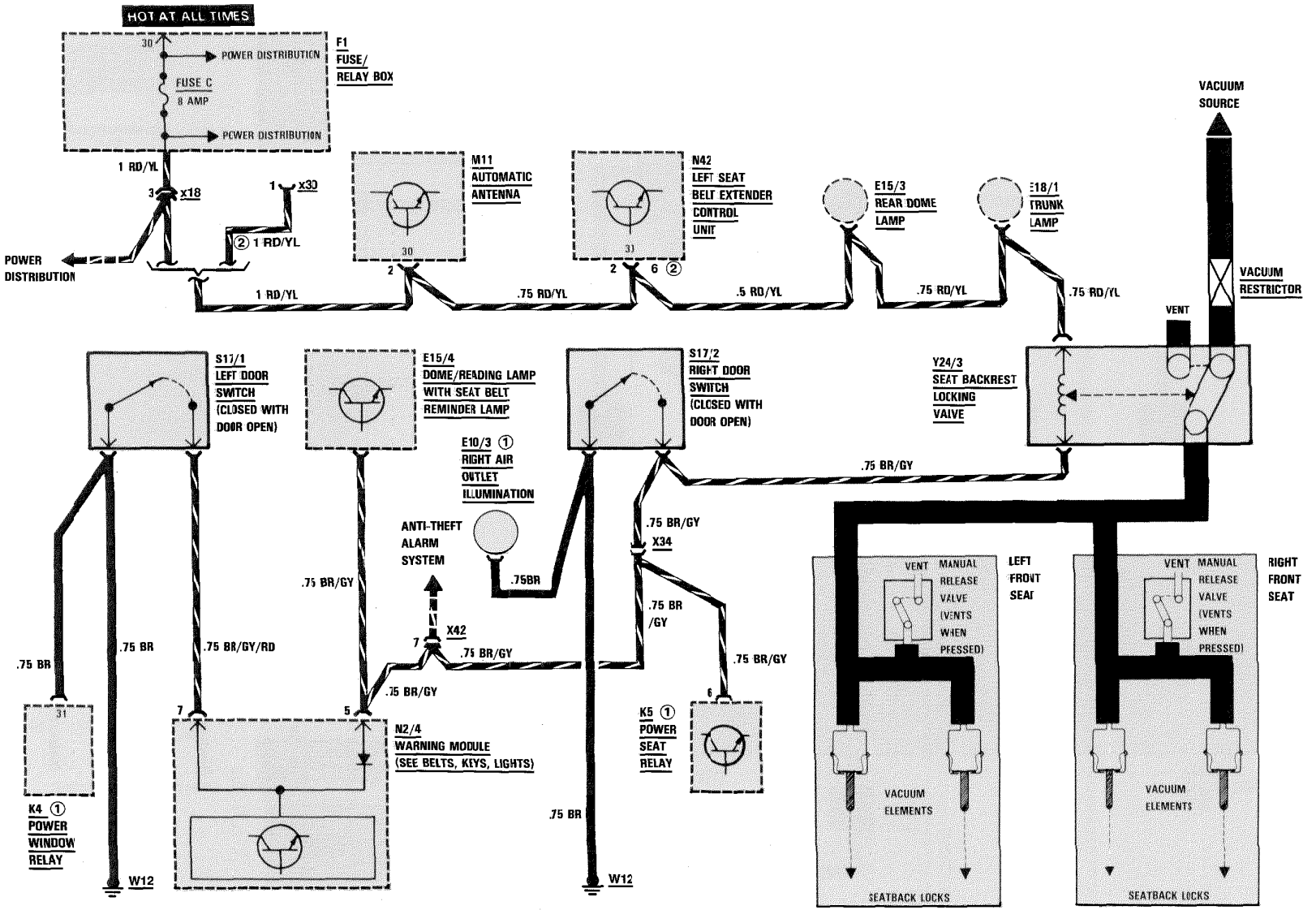

REVISIONS: ① AS OF MY 1989
② AS OF MY 1991

SEAT BELT EXTENDERS (LEFT SIDE)

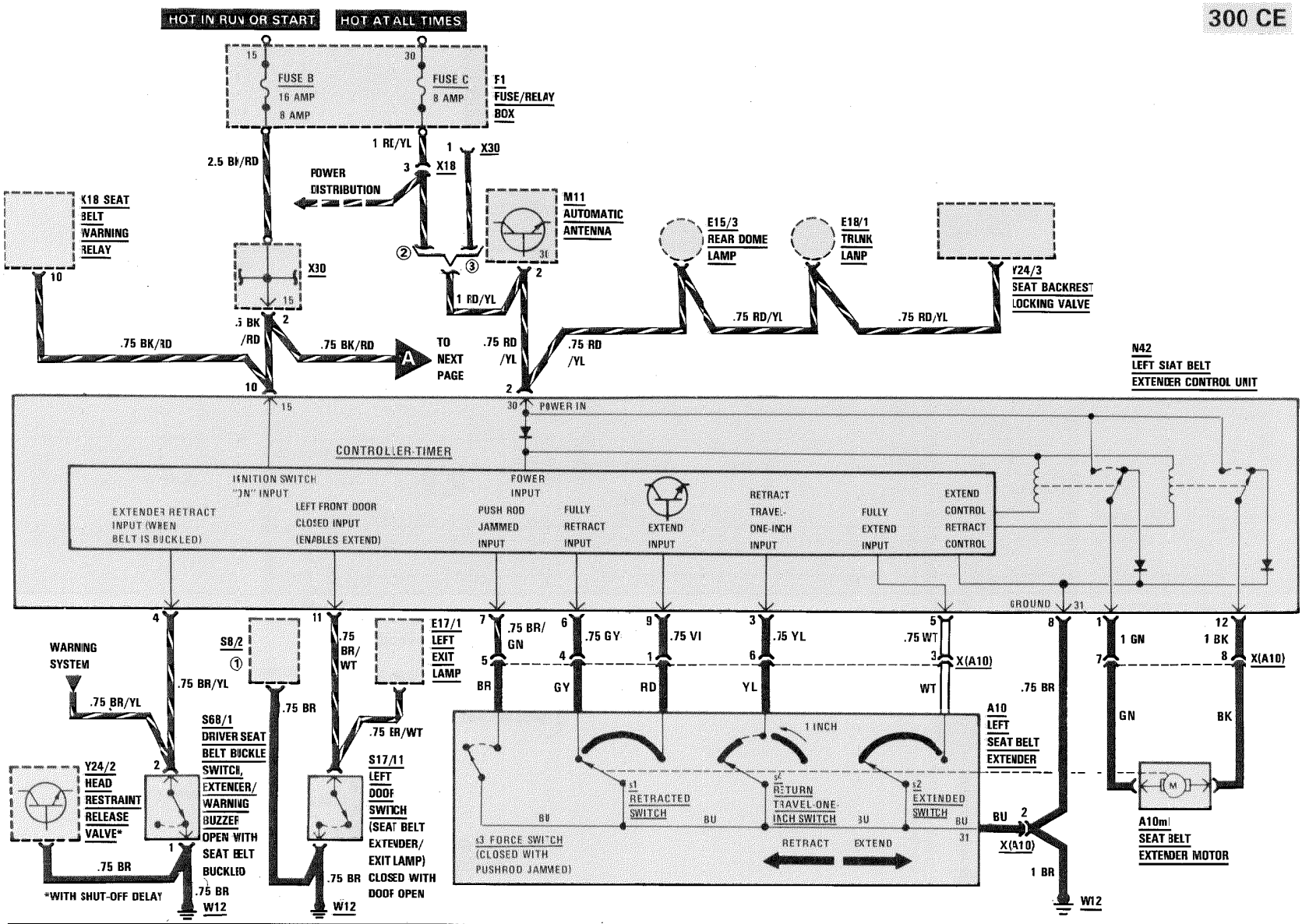

REVISIONS: ① WARNING BUZZER SWITCH, EXTERIOR LAMPS/CENTRAL LOCKING SYSTEM
② MY 1988/MY 1989
③ AS OF MY 1990

SEAT BELT EXTENDERS (RIGHT SIDE)

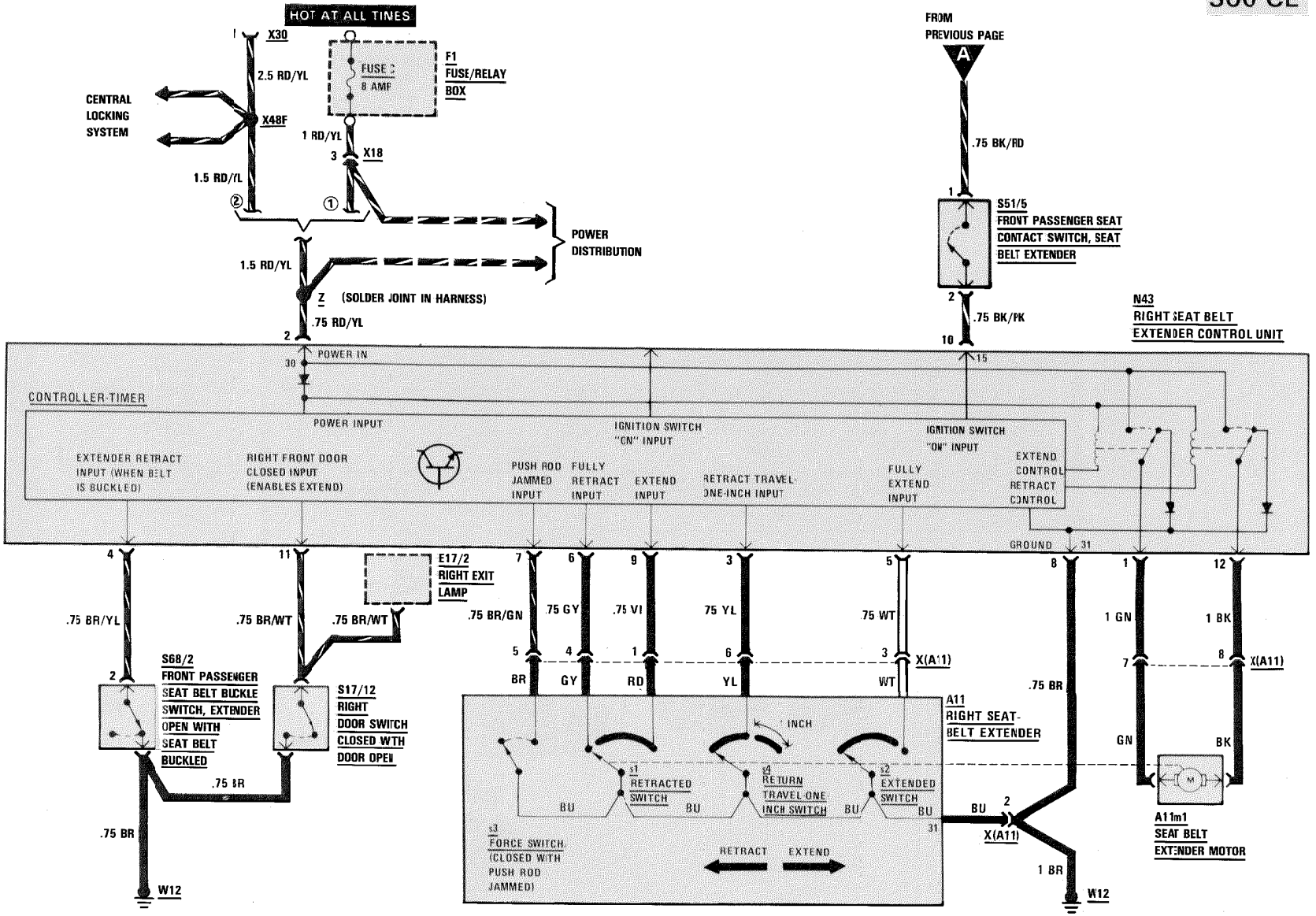

REVISIONS: ① MY 1988/1989
② AS OF MY 1990

SEAT BELT EXTENDERS (LEFT SIDE)

AS OF MY 1991

300 CE

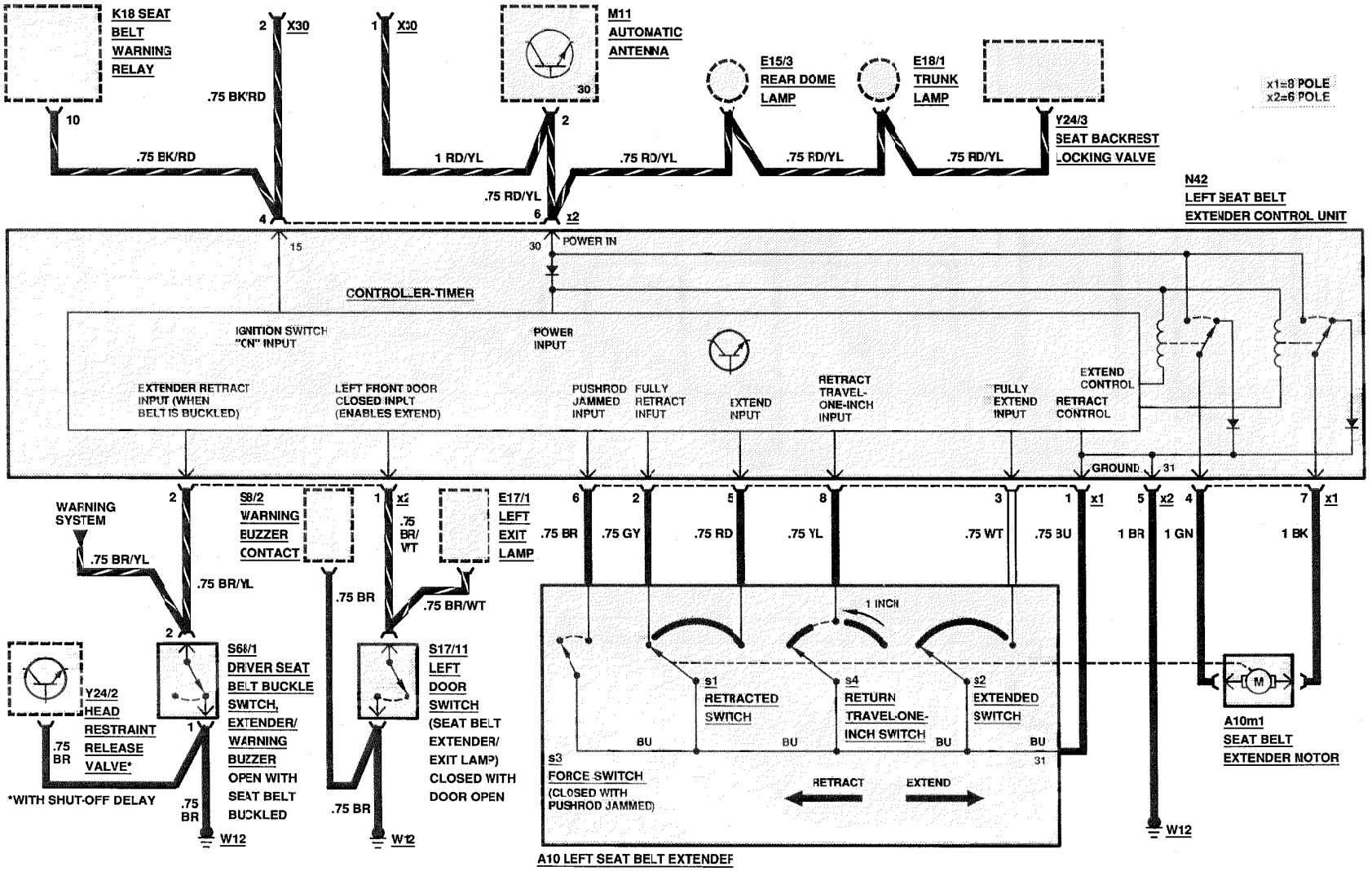

REVISIONS:

SEAT BELT EXTENDERS (RIGHT SIDE)

AS OF MY 1991

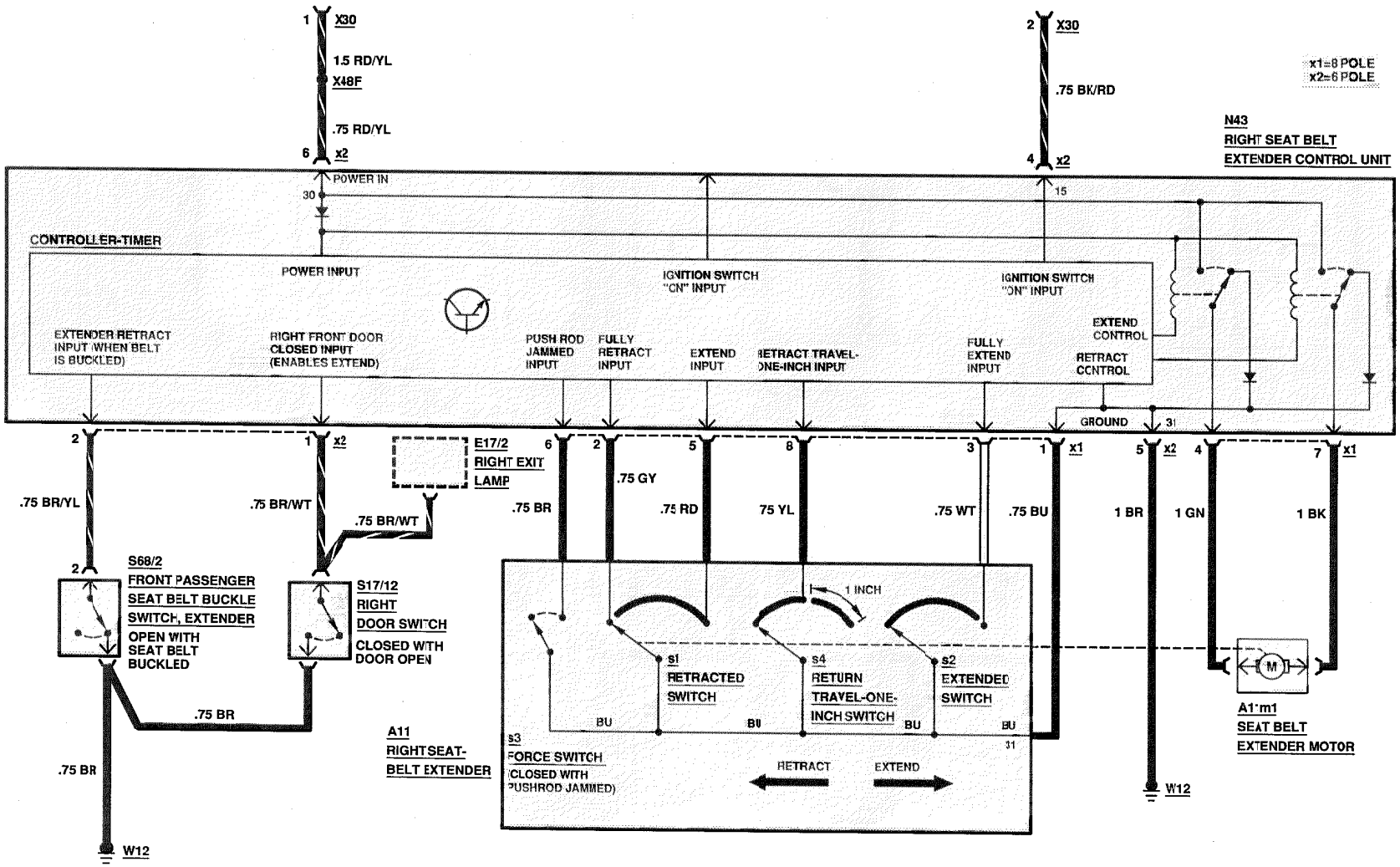

REVISIONS:

SUPPLEMENTAL RESTRAINT SYSTEM (SRS) (WITH DRIVER AIR BAG)

WARNING:

GAS GENERATORS ARE T1 PYROTECHNIC DEVICES, WHICH CAN CAUSE SEVERE INJURY IF MISHANDLED. BEFORE TESTING, REPAIRING OR HANDLING ANY PART OF THIS SYSTEM, DISCONNECT AND COVER THE NEGATIVE BATTERY TERMINAL AND DISCONNECT THE RED, 10-PIN CONNECTOR LOCATED UNDER THE FRONT PASSENGER FOOTREST. REFER TO GROUP 91 OF THE SERVICE MICROFICHE SYSTEM FOR PROCEDURES REGARDING TESTING, REMOVING, REPLACING, STORING AND DISPOSING OF SYSTEM COMPONENTS. OBSERVE ALL CAUTIONS FOUND IN THIS INFORMATION.

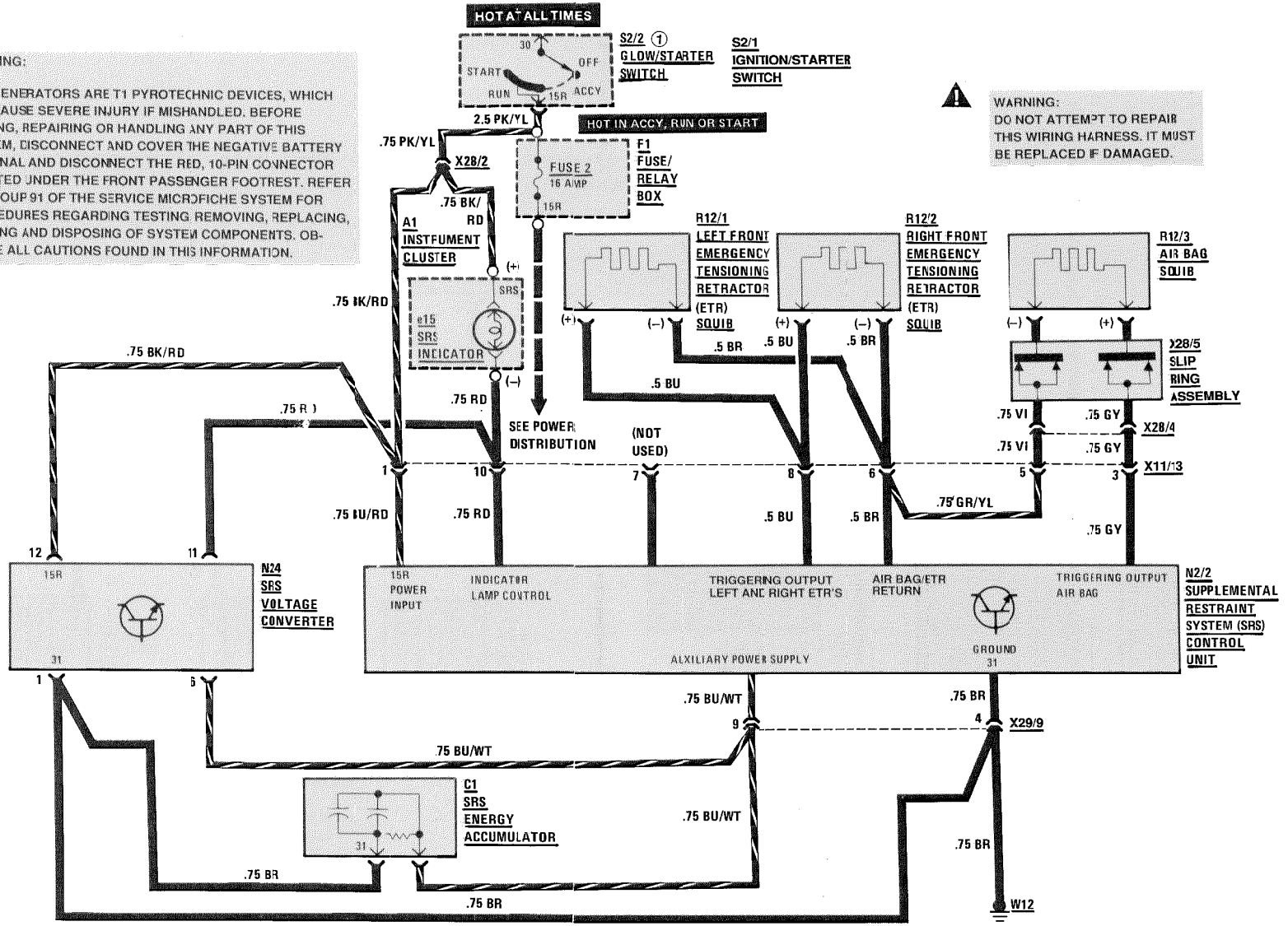

WARNING:
DO NOT ATTEMPT TO REPAIR THIS WIRING HARNESS. IT MUST BE REPLACED IF DAMAGED.

REVISIONS:

SUPPLEMENTAL RESTRAINT SYSTEM (SRS) (WITH DRIVER AIR BAG)

WARNING:
GAS GENERATORS ARE T1 PYROTECHNIC DEVICES, WHICH CAN CAUSE SEVERE INJURY IF MISHANDLED BEFORE TESTING, REPAIRING OR HANDLING ANY PART OF THIS SYSTEM, DISCONNECT AND COVER THE NEGATIVE BATTERY TERMINAL AND DISCONNECT THE RED, 10-PIN CONNECTOR LOCATED UNDER THE FRONT PASSENGER FOOTREST. REFER TO GROUP 91 OF THE SERVICE MICROFICHE SYSTEM FOR PROCEDURES REGARDING TESTING, REMOVING, REPLACING, STORING AND DISPOSING OF SYSTEM COMPONENTS. OBSERVE ALL CAUTIONS FOUND IN THIS INFORMATION.

WARNING:
DO NOT ATTEMPT TO REPAIR THIS HARNESS. IT MUST BE REPLACED IF DAMAGED.

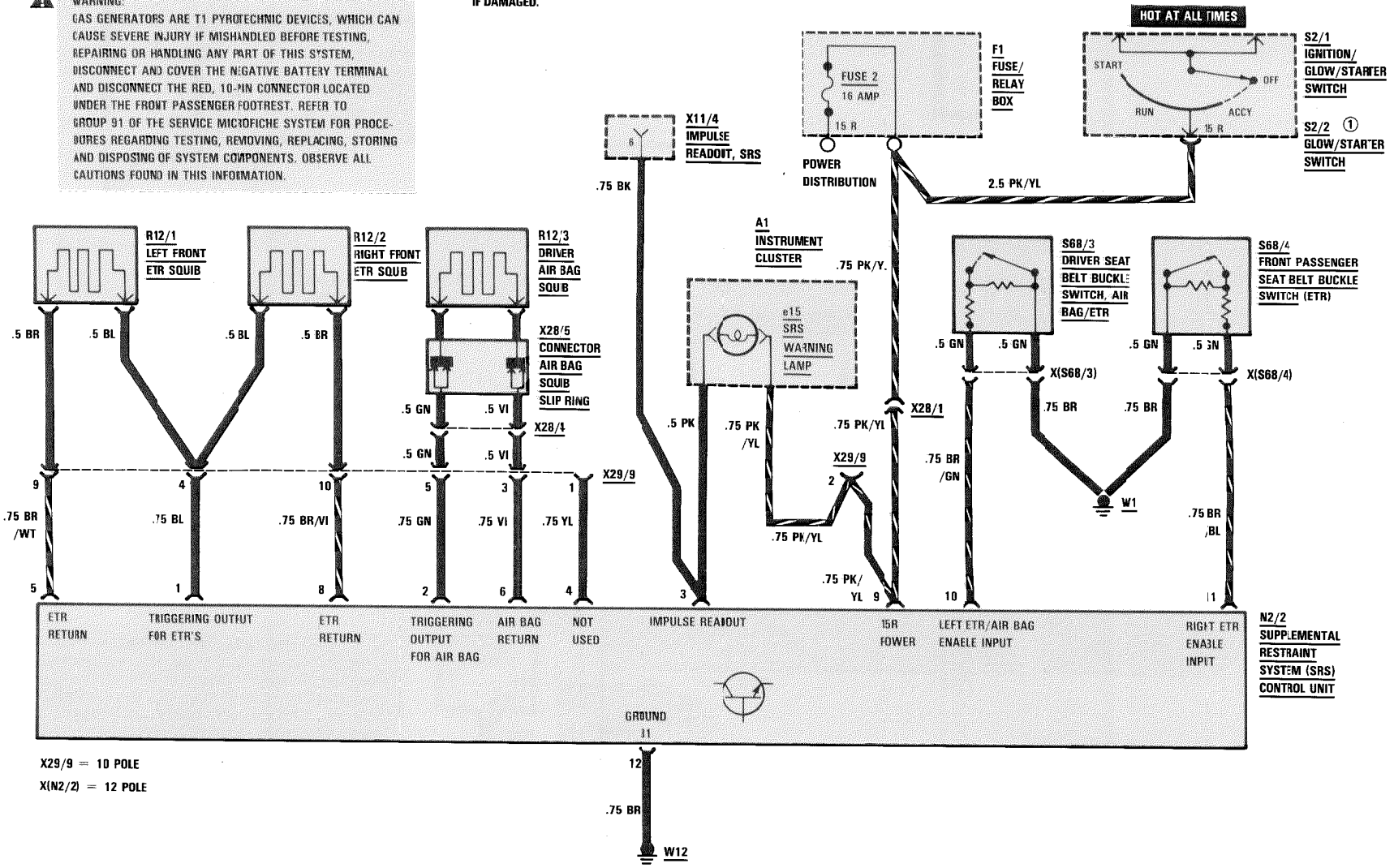

REVISIONS: ① DIESEL MODELS

SUPPLEMENTAL RESTRAINT SYSTEM (SRS) (WITH DRIVER AND FRONT PASSENGER AIR BAGS)

AS OF MY 1989

WARNING:
GAS GENERATORS ARE T1 PYROTECHNIC DEVICES, WHICH CAN CAUSE SEVERE INJURY IF MISHANDLED BEFORE TESTING, REPAIRING OR HANDLING ANY PART OF THIS SYSTEM, DISCONNECT AND COVER THE NEGATIVE BATTERY TERMINAL AND DISCONNECT THE RED, 10-PIN CONNECTOR LOCATED UNDER THE FRONT PASSENGER FOOTREST. REFER TO GROUP 91 OF THE SERVICE MICROFICHE SYSTEM FOR PROCEDURES REGARDING TESTING, REMOVING, REPLACING, STORING AND DISPOSING OF SYSTEM COMPONENTS. OBSERVE ALL CAUTIONS FOUND IN THIS INFORMATION.

WARNING:
DO NOT ATTENPT TO REPAIR THIS HARNESS. IT MUST BE REPLACED IF DAMAGED.

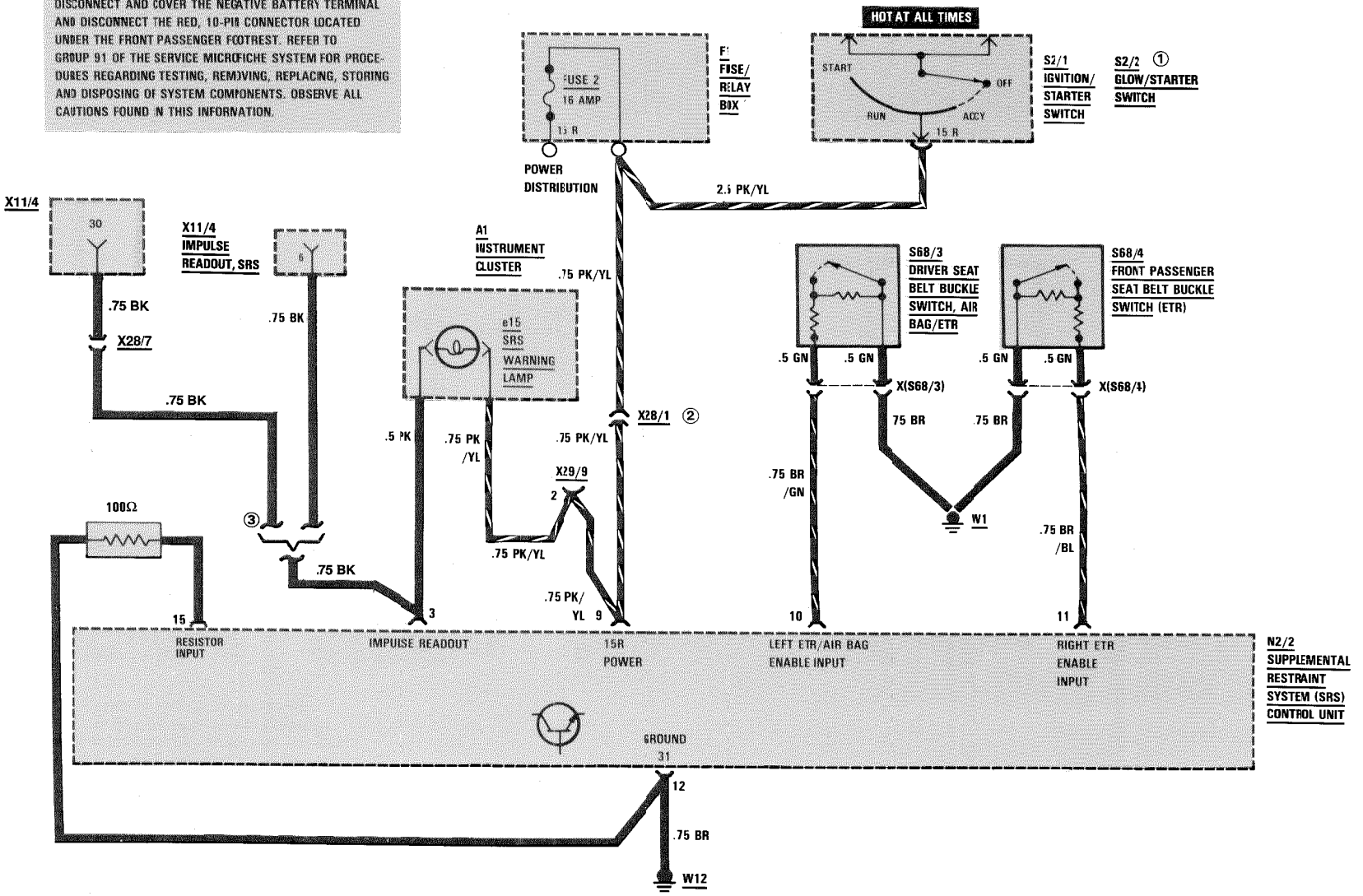

REVISIONS: ① DIESEL MODELS
② NOT USED AS OF MY 1991
③ MODELS 400E/500E

SUPPLEMENTAL RESTRAINT SYSTEM (SRS) (WITH DRIVER AND FRONT PASSENGER AIR BAGS)

AS OF MY 1989

WARNING:

GAS GENERATORS ARE T1 PYROTECHNIC DEVICES, WHICH CAN CAUSE SEVERE INJURY IF MISHANDLED. BEFORE TESTING, REPAIRING OR HANDLING ANY PART OF THIS SYSTEM, DISCONNECT AND COVER THE NEGATIVE BATTERY TERMINAL AND DISCONNECT THE RED, 10-PIN CONNECTOR LOCATED UNDER THE FRONT PASSENGER FOOTREST. REFER TO GROUP 91 OF THE SERVICE MICROFICHE SYSTEM FOR PROCEDURES REGARDING TESTING, REMOVING, REPLACING, STORING AND DISPOSING OF SYSTEM COMPONENTS. OBSERVE ALL CAUTIONS FOUND IN THIS INFORMATION.

WARNING:
DO NOT ATTEMPT TO REPAIR THIS HARNESS. IT MUST BE REPLACED IF DAMAGED.

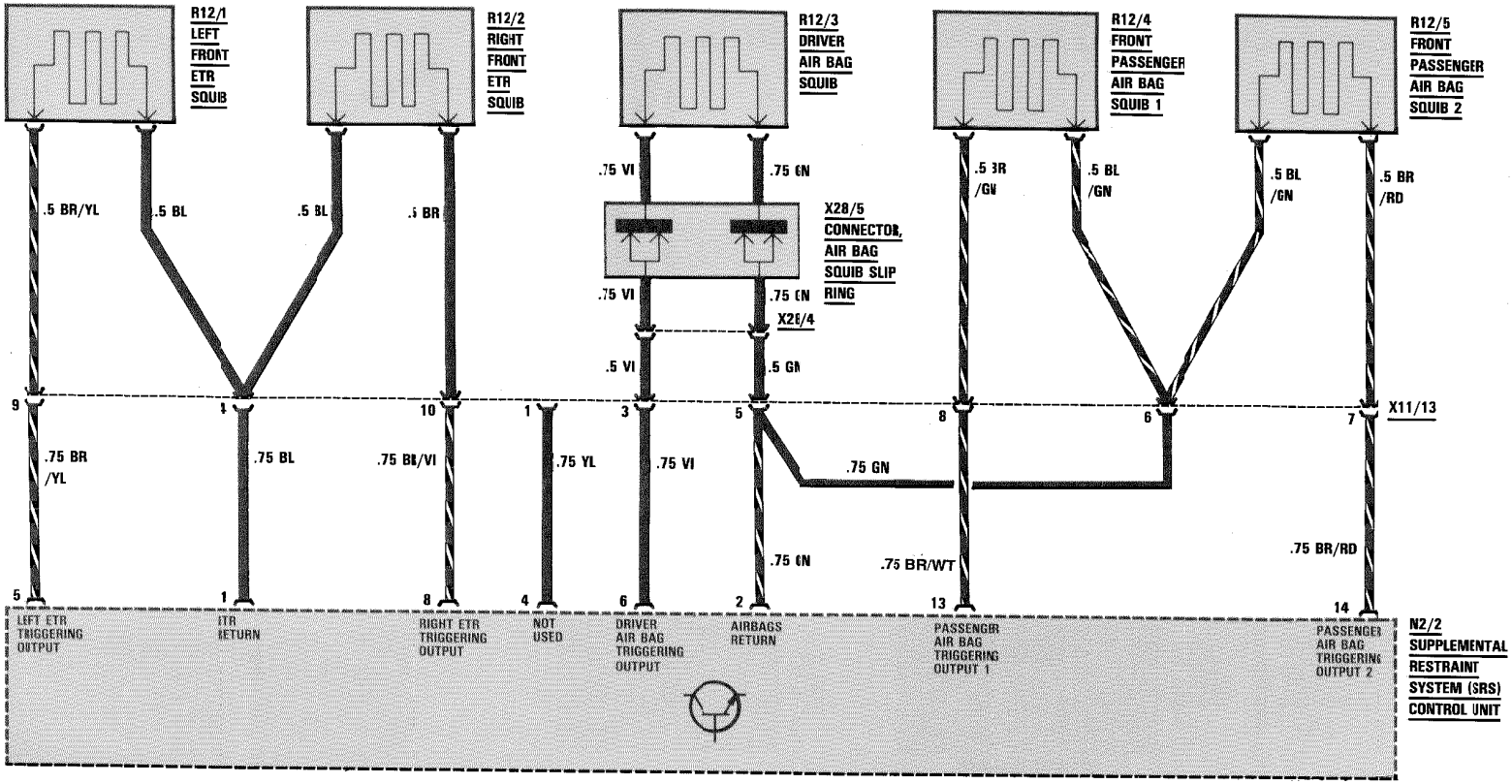

REVISIONS:

WIPER/WASHER

AS OF MY 1986

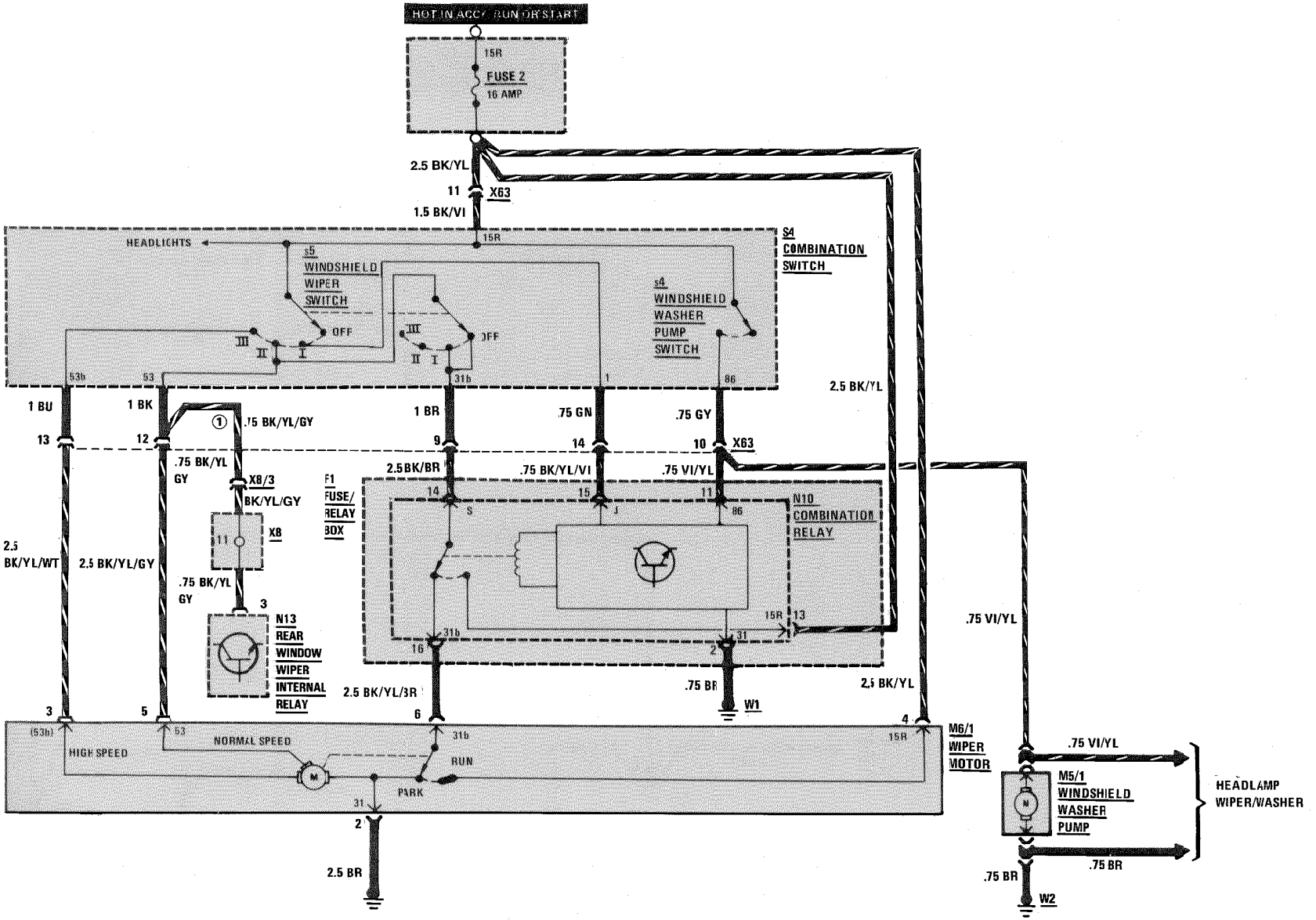

REVISIONS: ① STATION WAGON

HEATED WINDSHIELD WASHER SYSTEM

AS OF MY 1989

MY 1986-1988

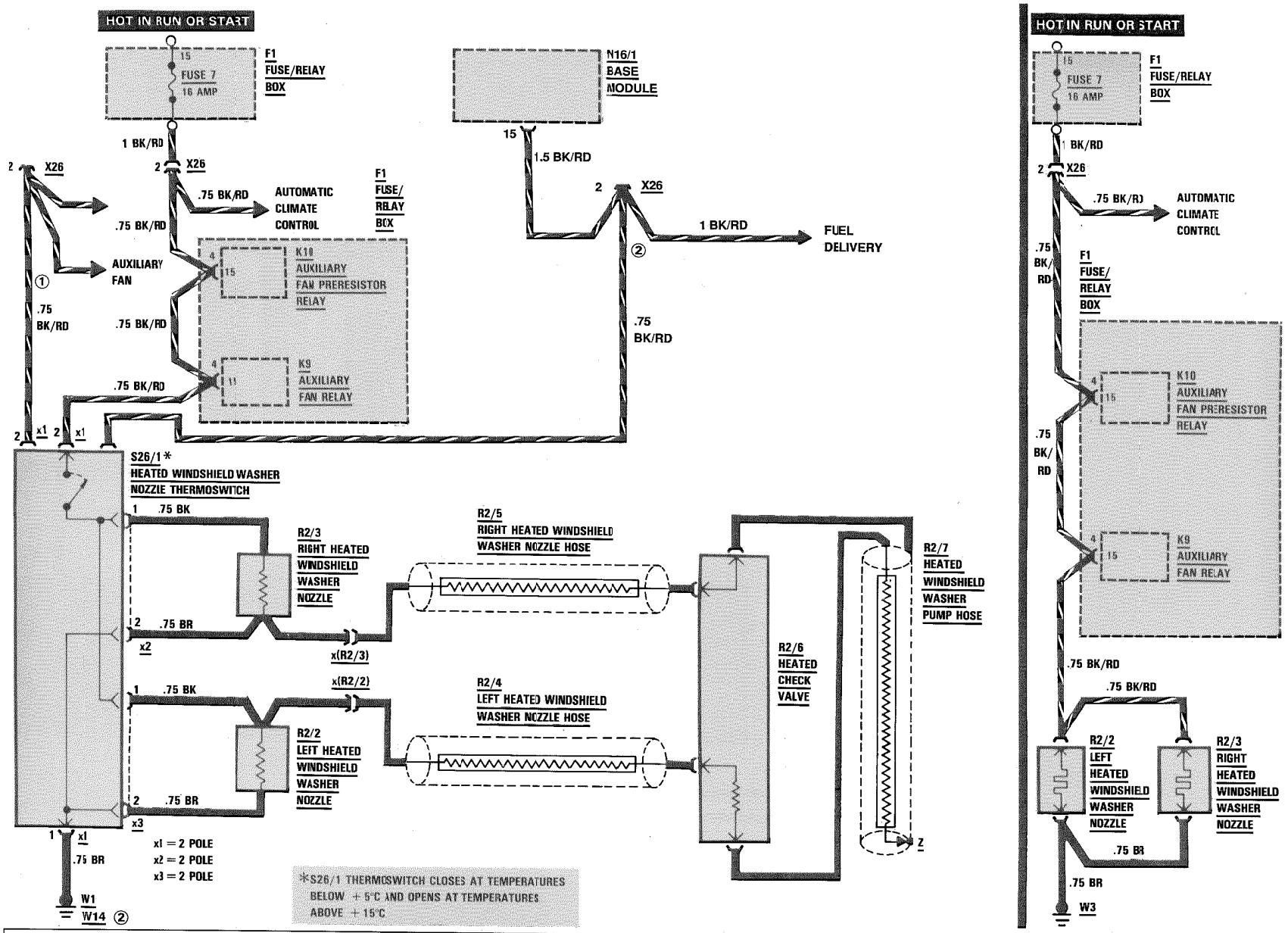

REVISIONS: ① AS OF MY 1990
② MODELS 400E/500E

REAR WIPER/WASHER

AS OF MY 1987

300 TE/TD

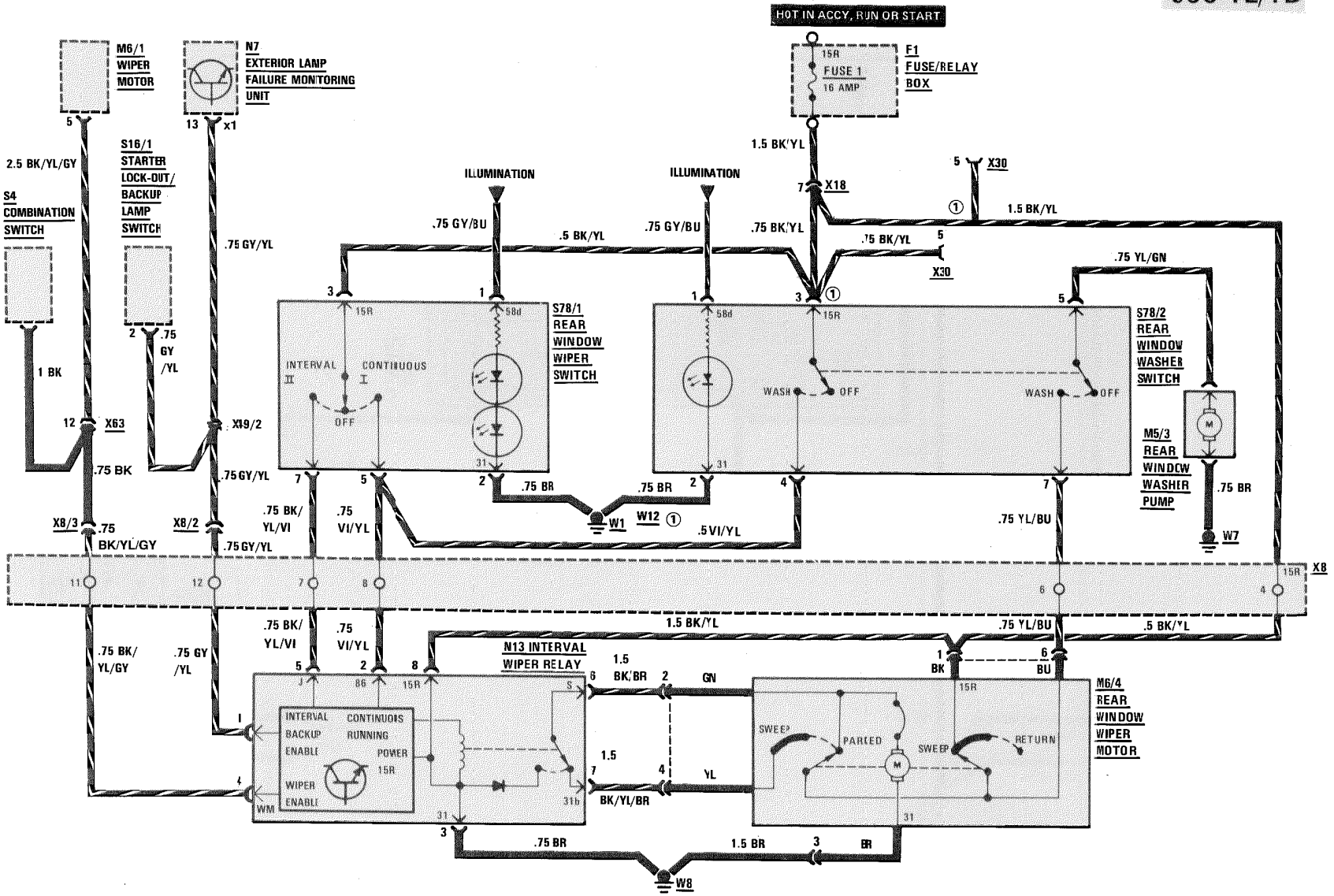

REVISIONS: ① AS OF MY 1990

HEADLAMP WIPER/WASHER

AS OF MY 1986

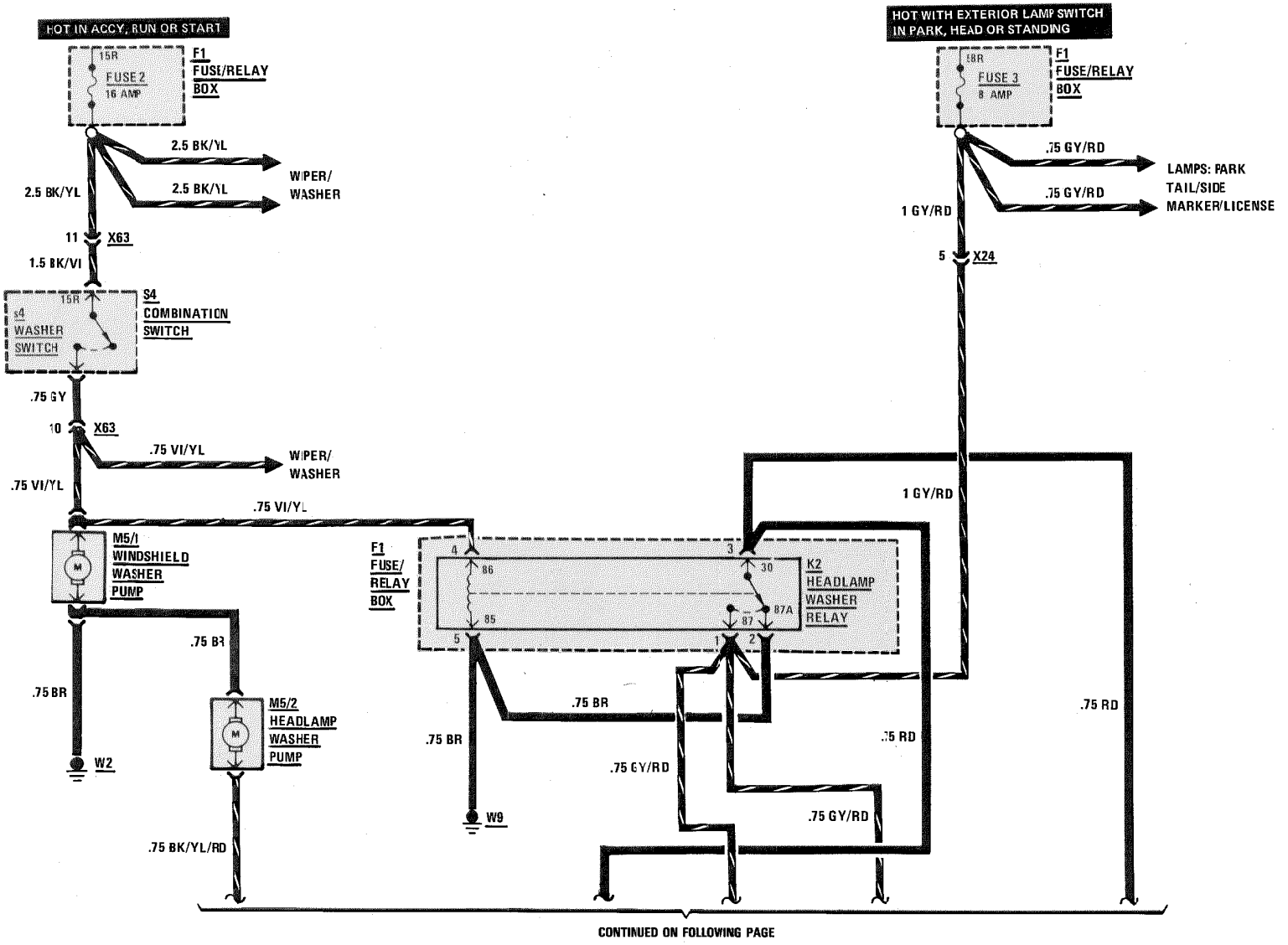

REVISIONS:

FIRST GEAR START RELAY

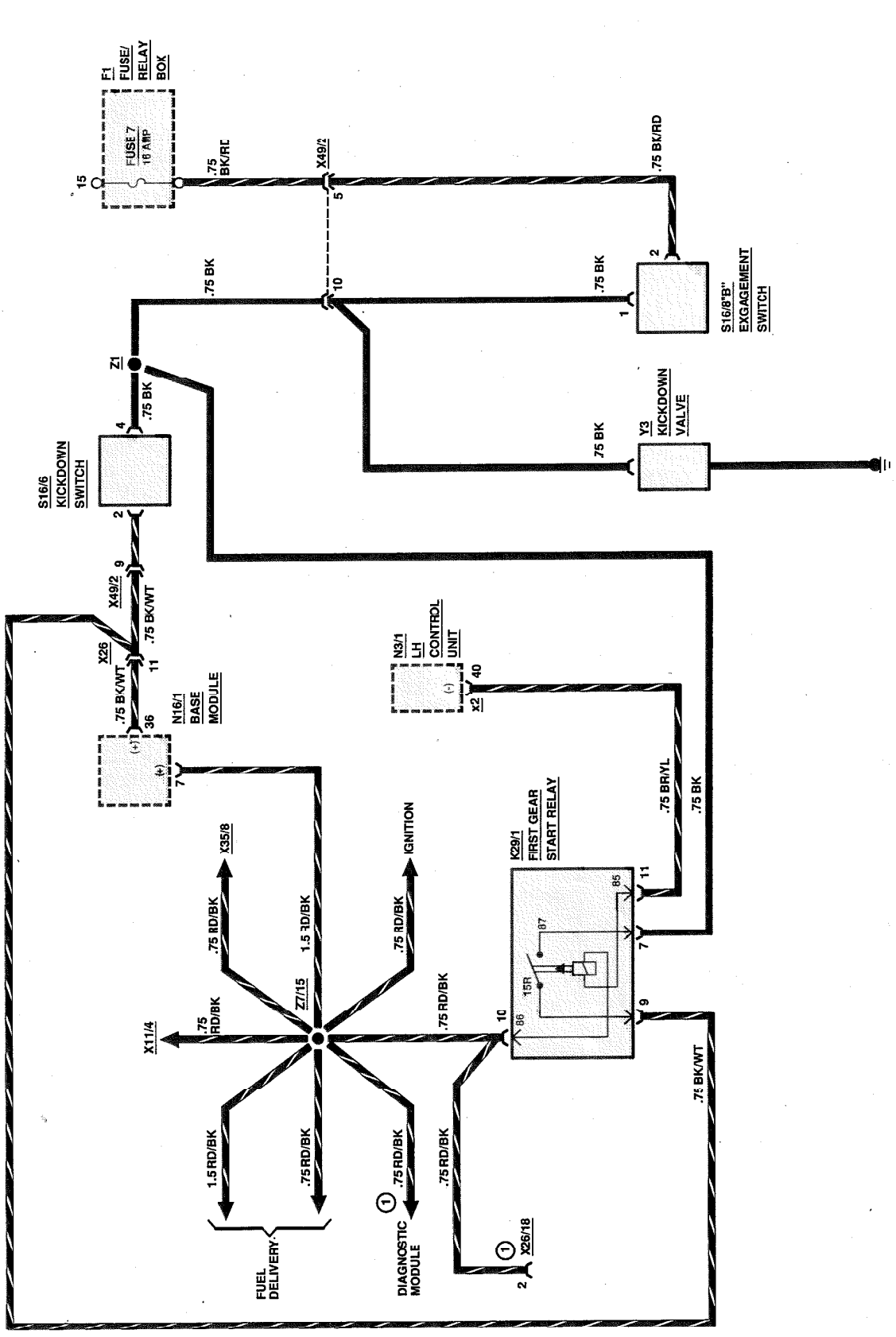

REVISIONS: ① CALIFORNIA VERSION

GROUND DISTRIBUTION (W1)

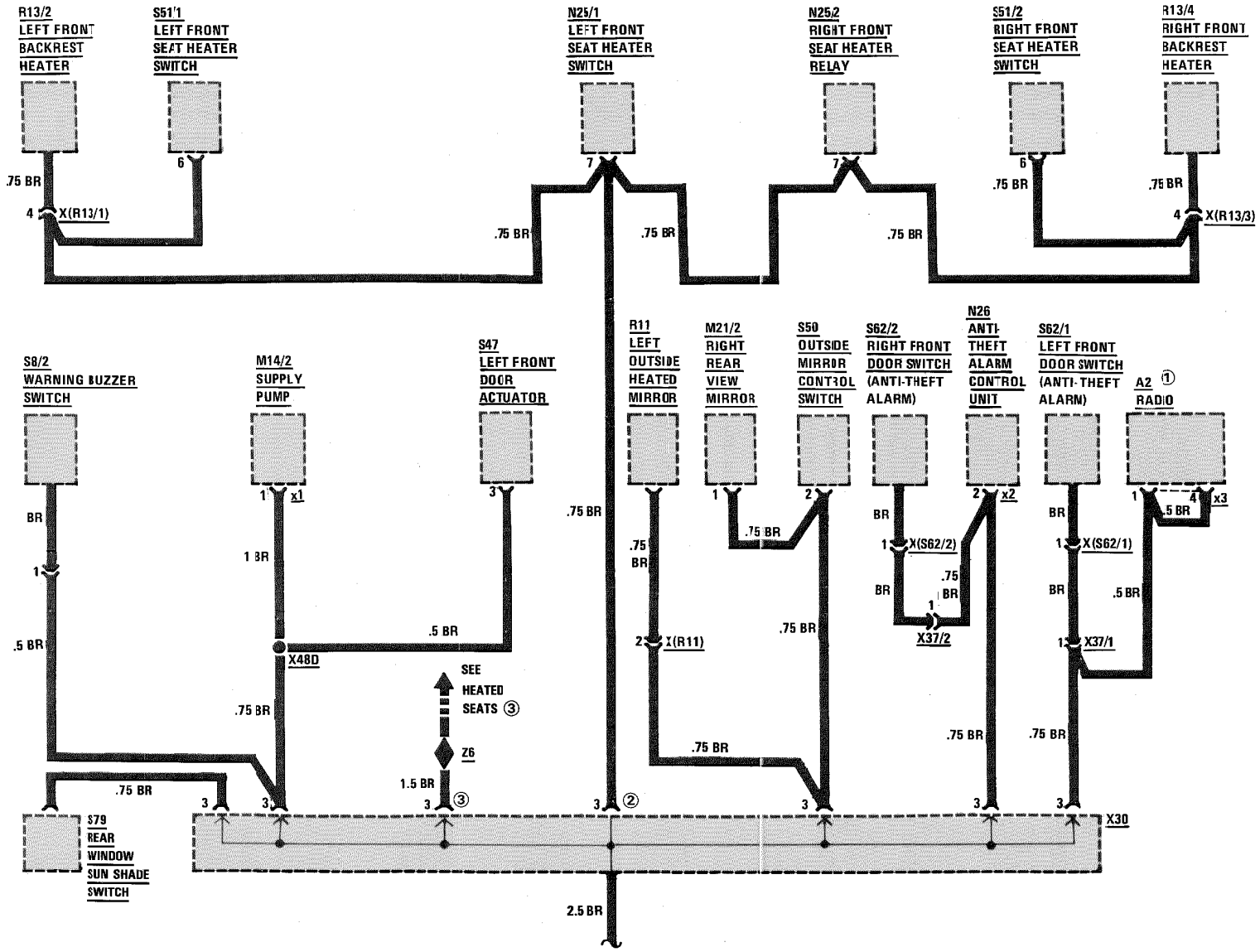

CONTINUED ON FOLLOWING PAGE

REVISIONS: ① AS OF MODEL YEAR 1987
② UP TO APRIL 1987 PRODUCTION
③ AS OF APRIL 1987 PRODUCTION

GROUND DISTRIBUTION (W1)

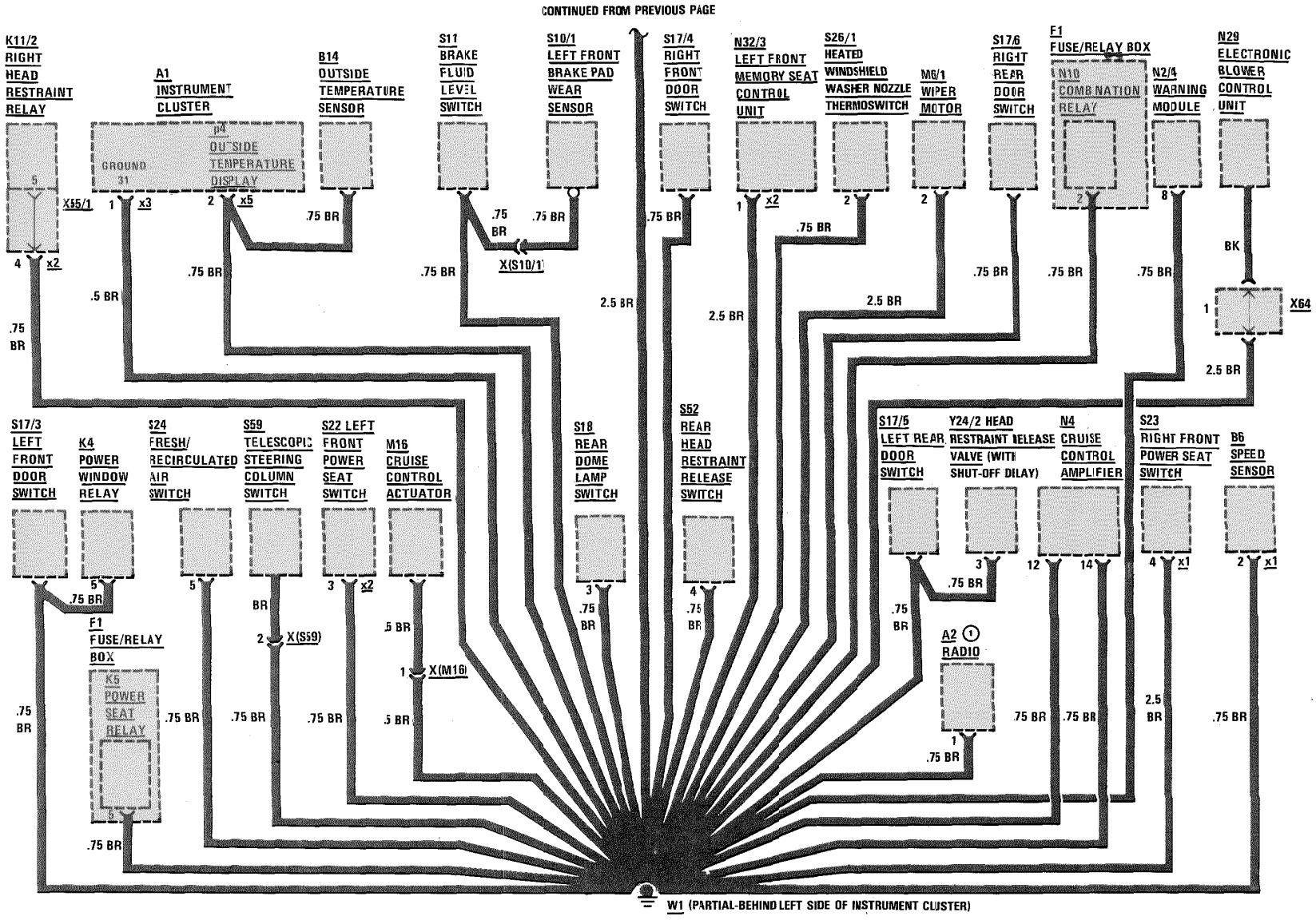

REVISIONS: ① MODEL YEAR 1986 ONLY

GROUND DISTRIBUTION (W1, W2, W3, W11, AND W14)

MY 1986-1989

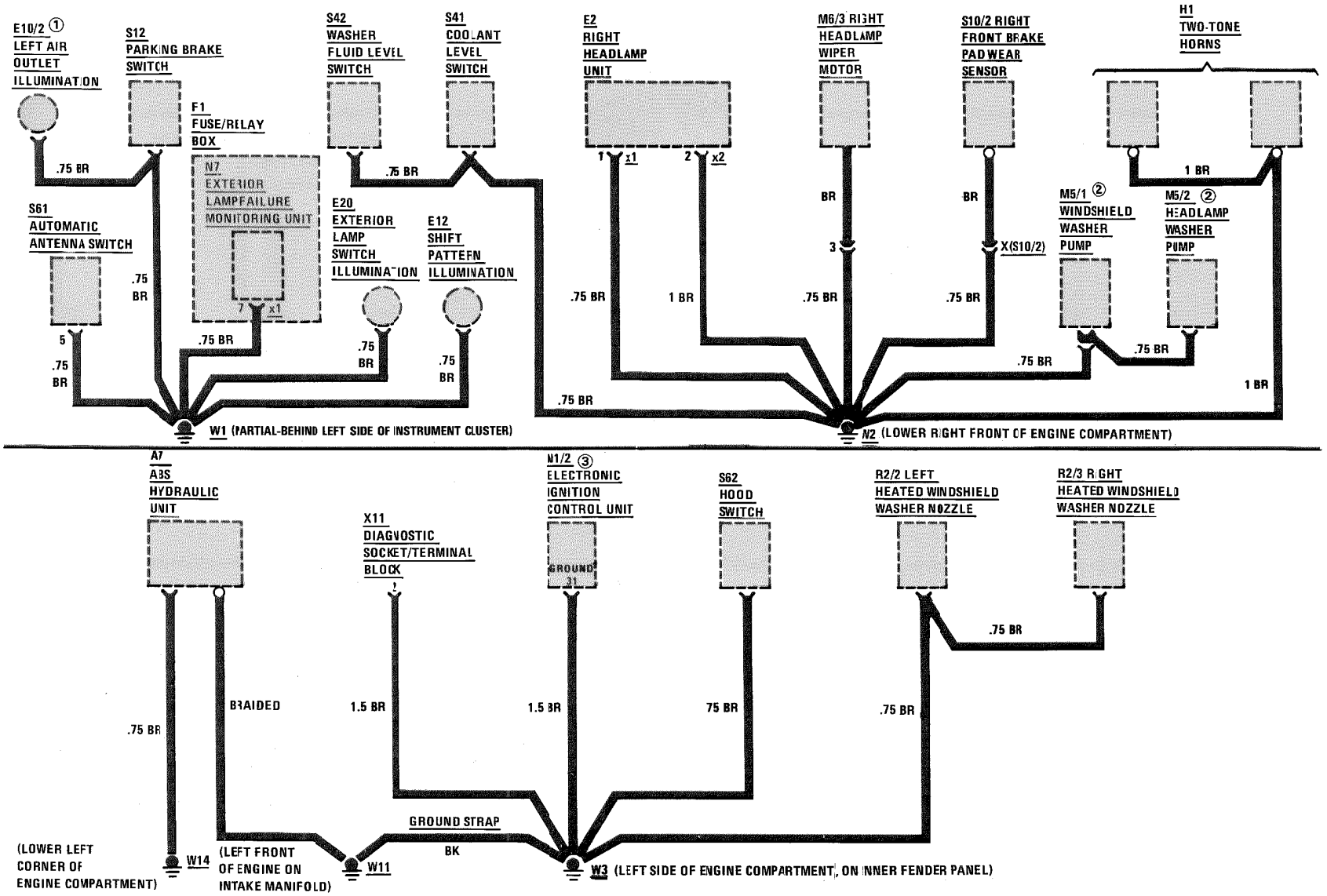

REVISIONS: ① AS OF MY 1989 E10/2 IS CONNECTED DIRECTLY TO GROUND (W1)
② MY 1986 TO 1988
③ NOT IN DIESELS

GROUND DISTRIBUTION (W5, W11, W6)

AS OF MY 1986

260 E/300 E/ 300 CE

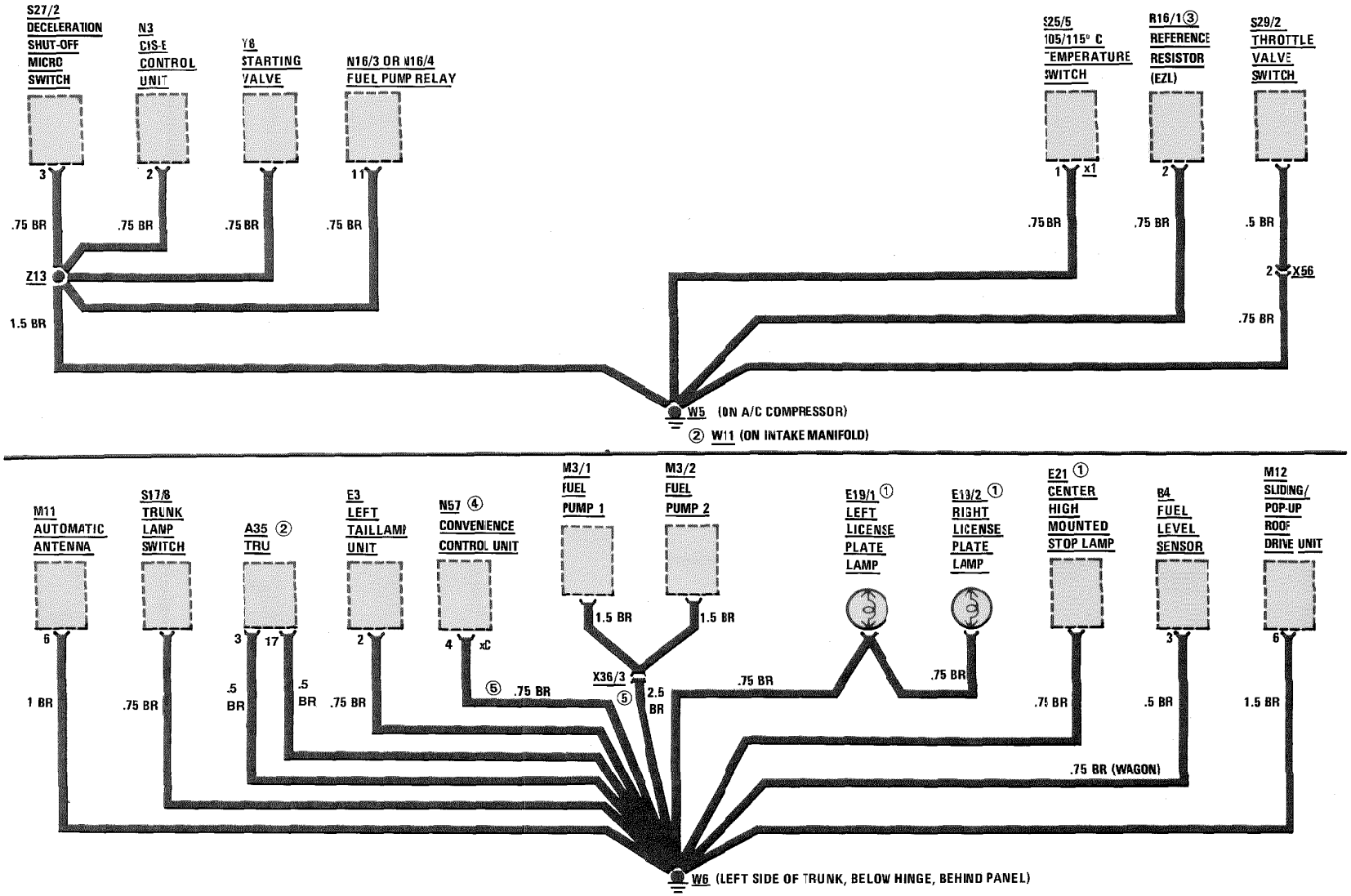

REVISIONS:
① SEDAN/COUPE ONLY (STATION WAGON, SEE W8)
② MY 1988-1989
③ AS OF MY 1990, GROUNDED TO W3
④ NOT IN 300 E
⑤ ASOF MY 1990
⑥ ASOF MY 1992

GROUND DISTRIBUTION (W4, W7, W9, W10, AND W13)

MY 1986-1989

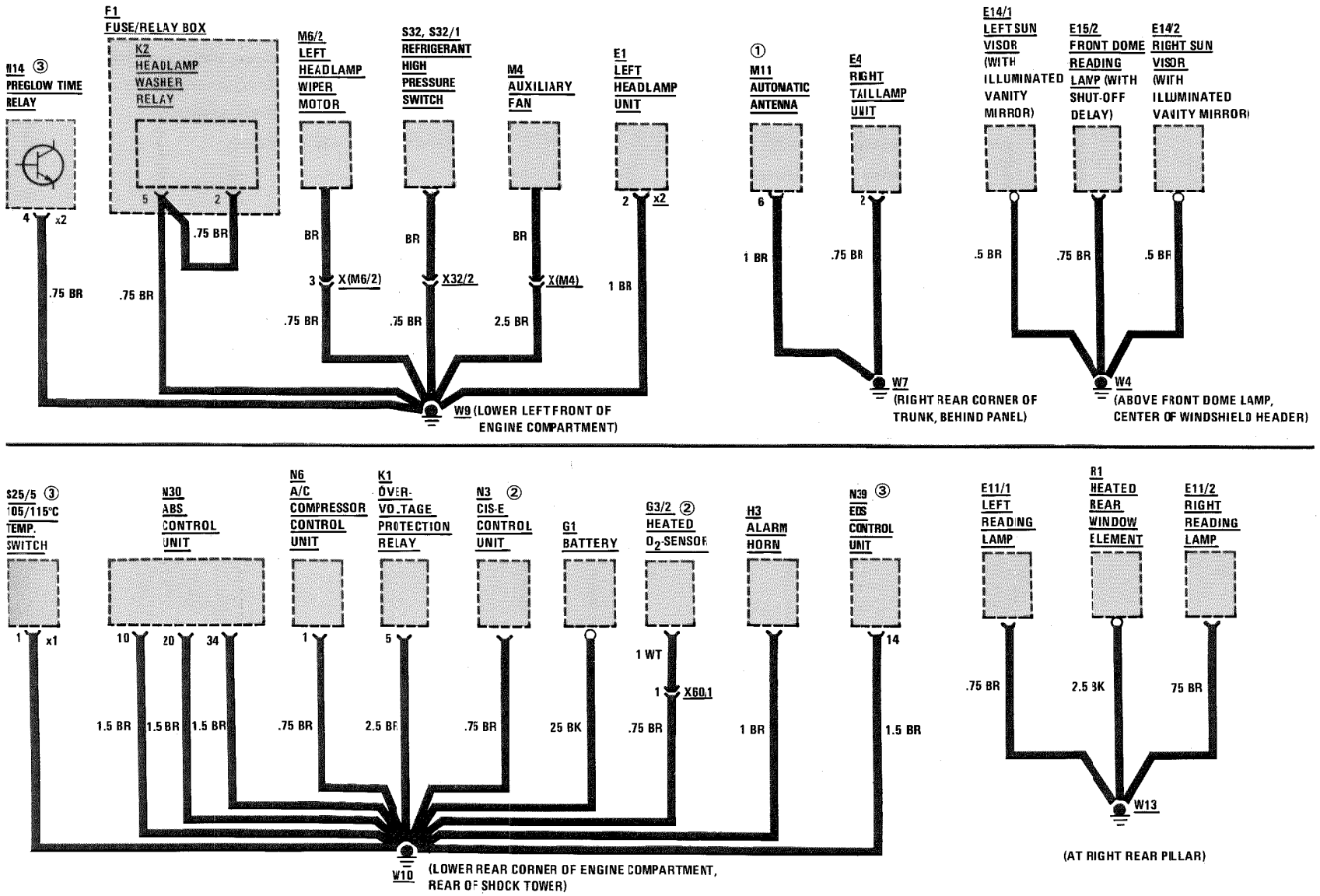

REVISIONS: ① STATION WAGON ONLY
② NOT IN DIESELS
③ DIESEL ONLY

GROUND DISTRIBUTION (W12)

MY 1986-1989

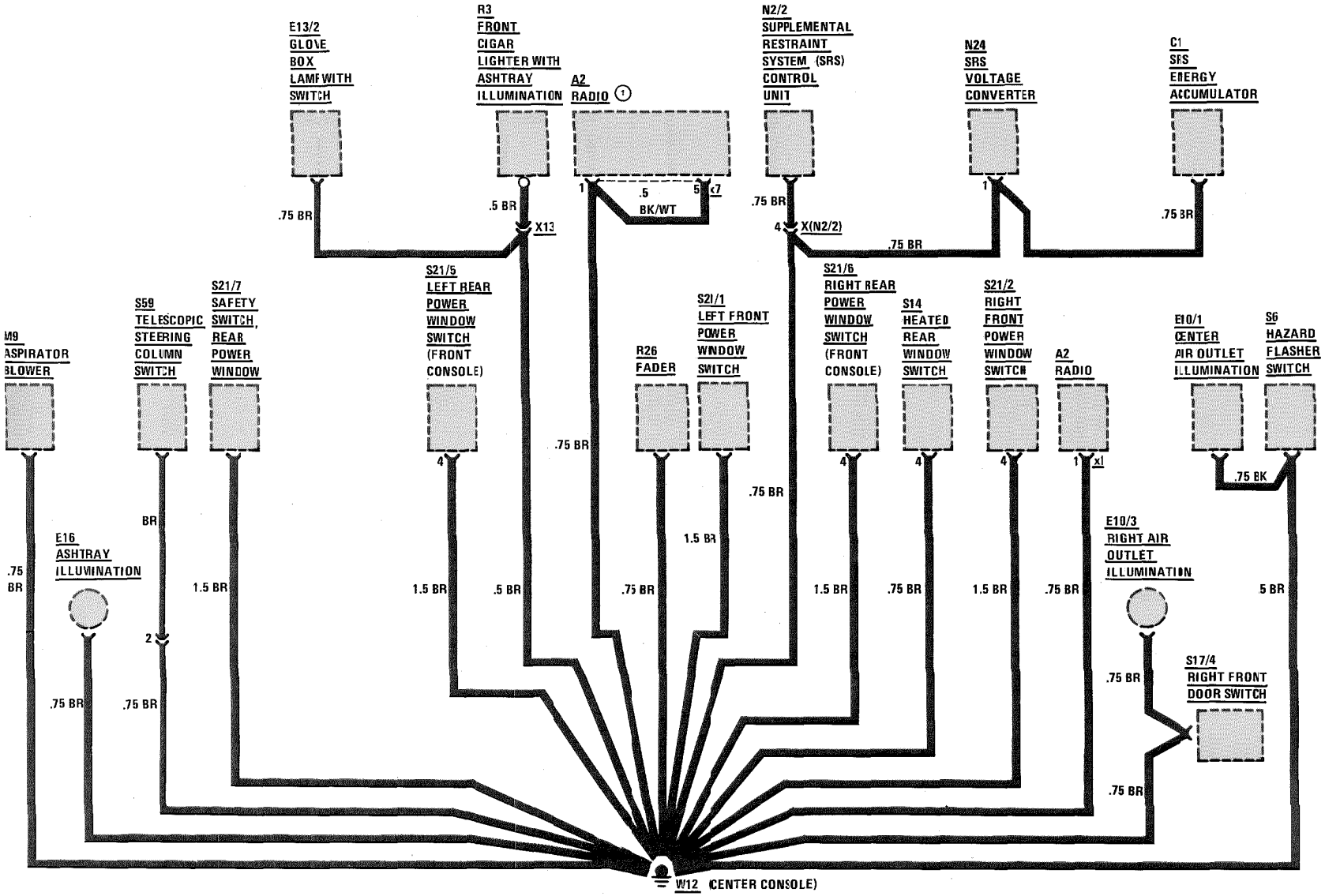

REVISIONS: ① AS OF MODEL YEAR 1987

GROUND DISTRIBUTION (W6, W8)

AS OF MY 1987
300 TE/300 TD

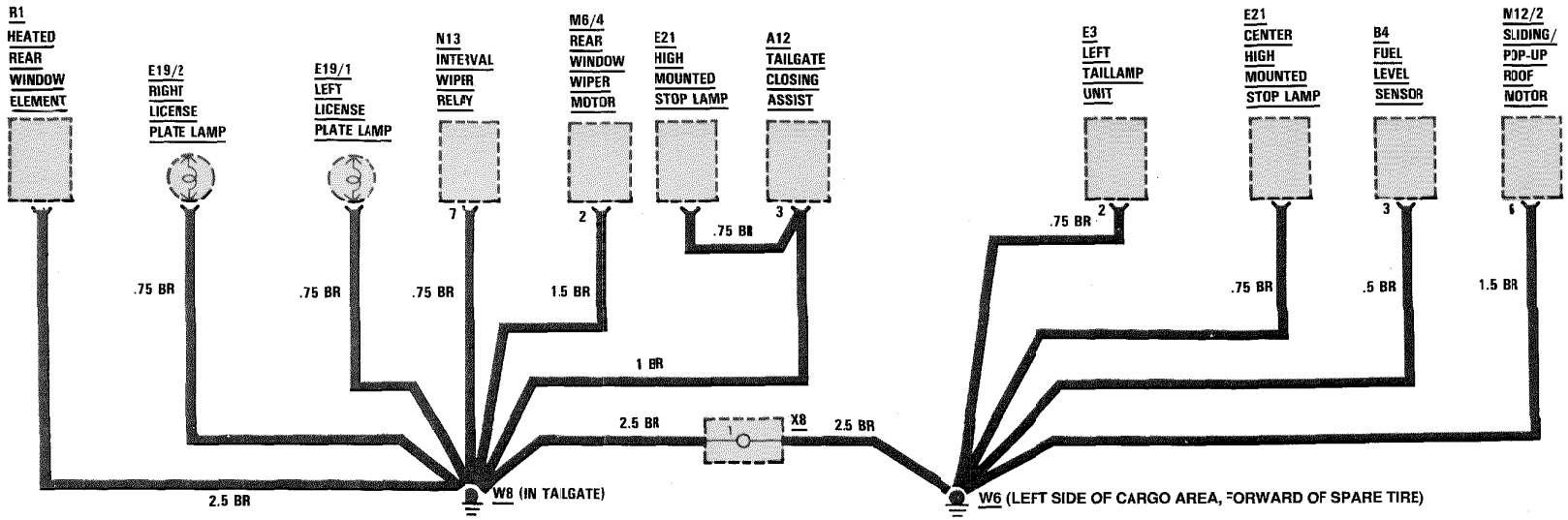

REVISIONS:

GROUND DISTRIBUTION (W1)

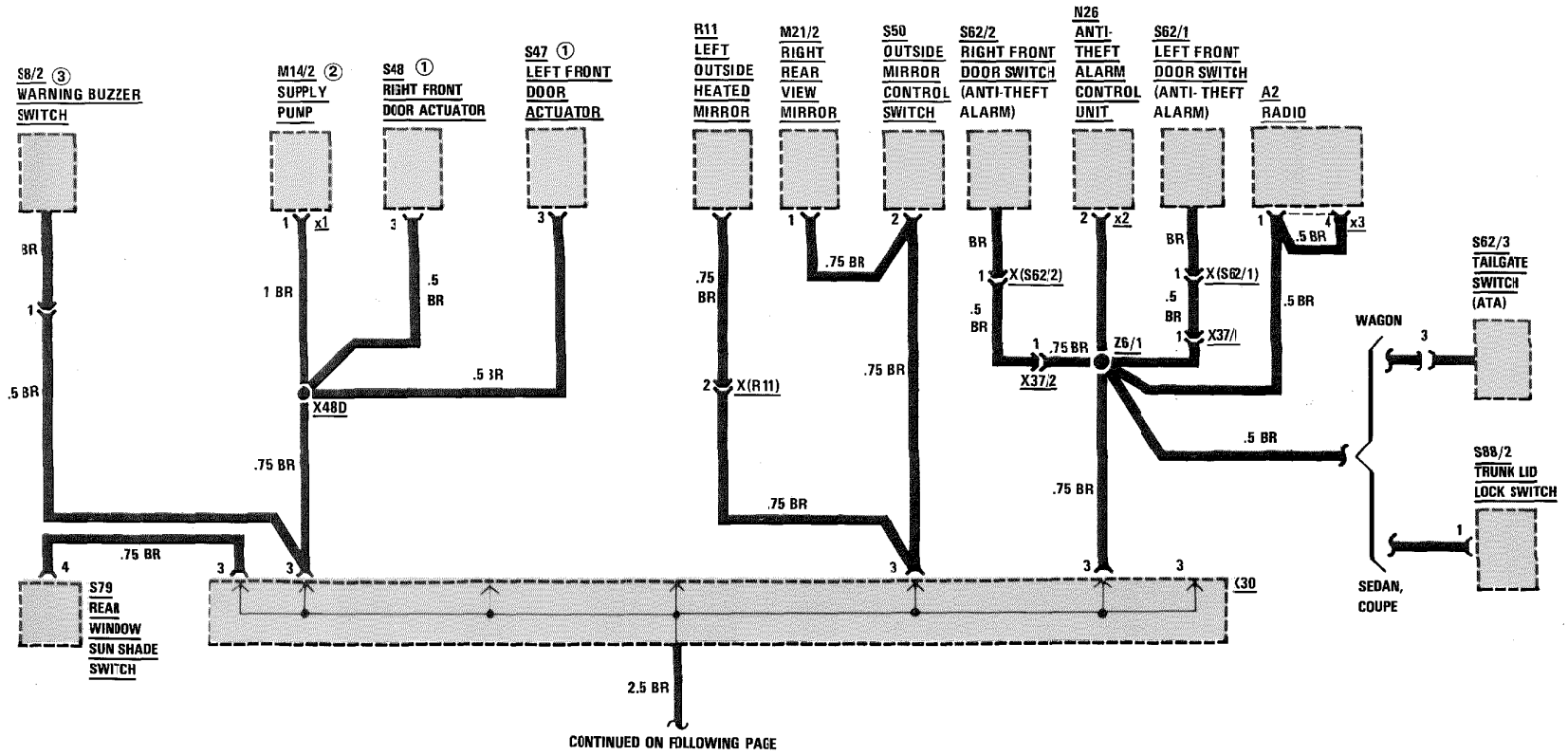

CONTINUED ON FOLLOWING PAGE

REVISIONS:
① EXCEPT 124.030/.051/.230
② AS OF MY 1991, 124.030 CONNECTS DIRECTLY TO W12
③ AS OF MY 1991, 124.030 CONNECTS DIRECTLY TO W1

GROUND DISTRIBUTION (W1)

AS OF MY 1990

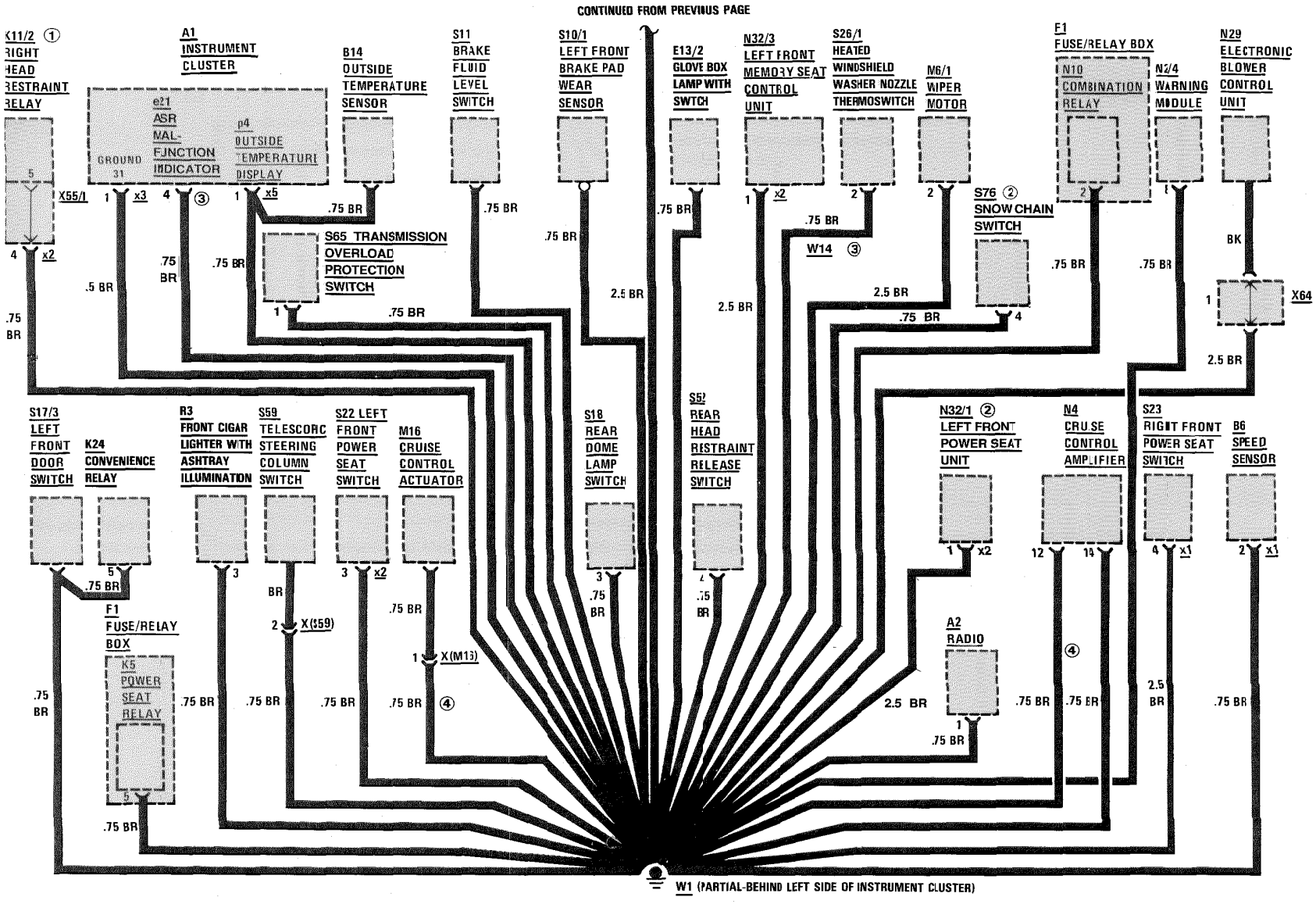

REVISIONS:
① MY 1990 ONLY
② AS OF MY 1991
③ MODELS 400E/500E
④ EXCEPT MODELS 400E/500E

GROUND DISTRIBUTION (W1, W2, W3, W11, AND W14)

AS OF MY 1990

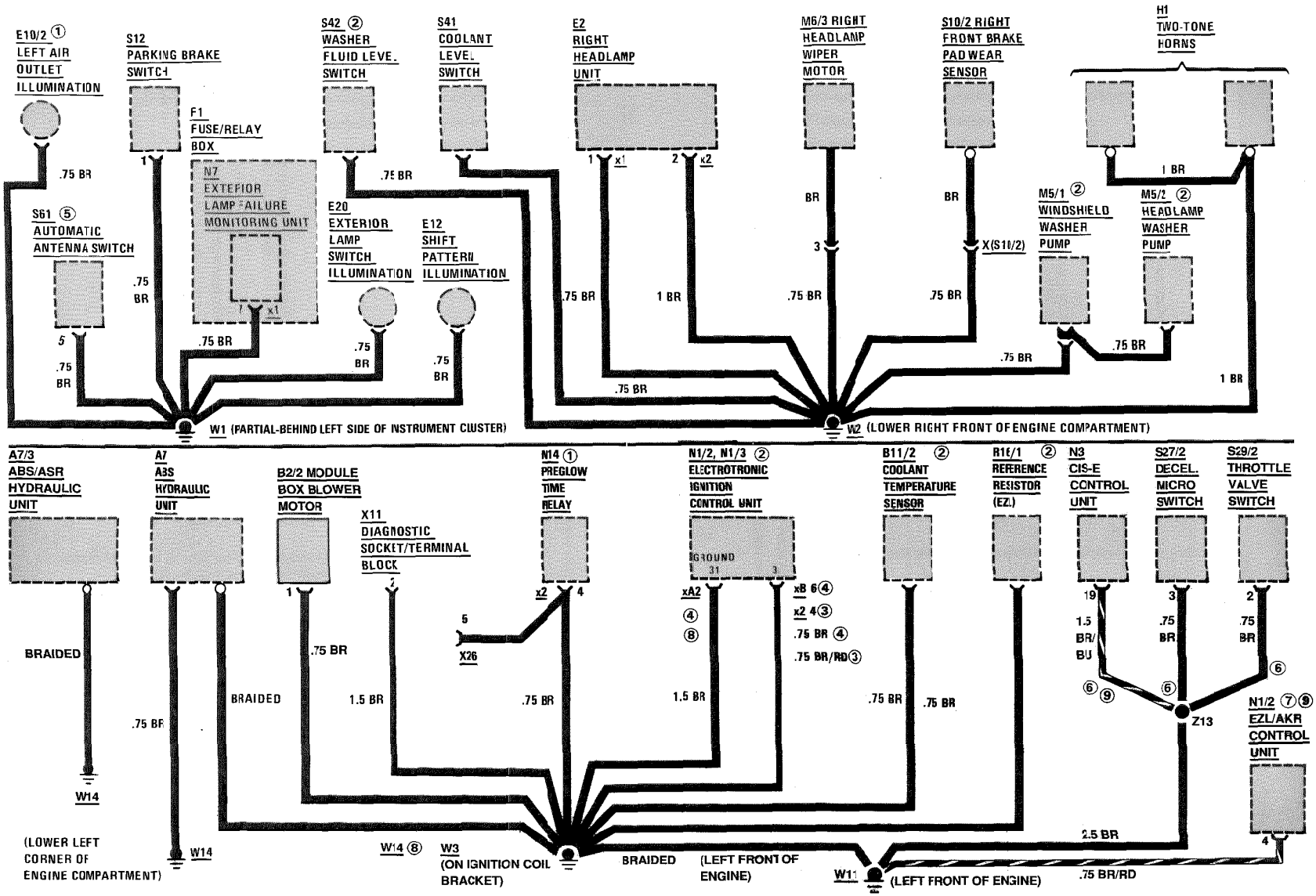

REVISIONS: ① DIESEL ONLY ② GASOLINE ONLY ③ M103 ④ M104 ⑤ MY 1990 ONLY ⑥ AS OF MY 1992, CONNECTED DIRECTLY TO W11 ⑦ AS OF MY 1992 ⑧ MODELS 400E/500E ⑨ EXCEPT MODELS 400E/500E

GROUND DISTRIBUTION (W4, W7, W9, AND W13)

AS OF MY 1990

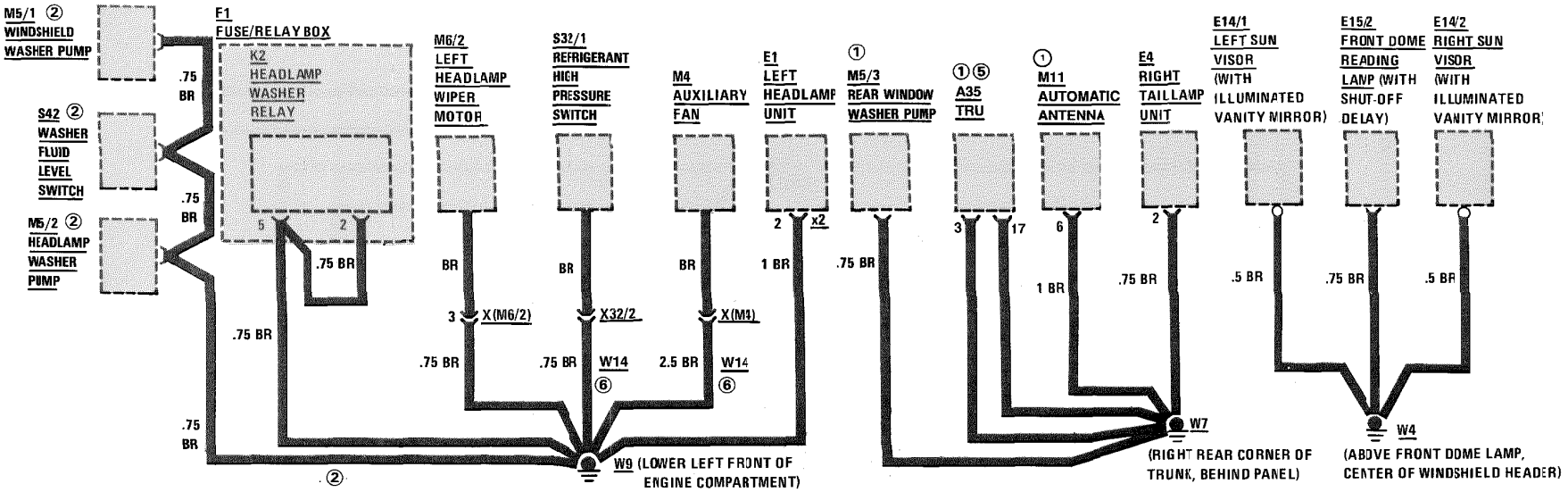

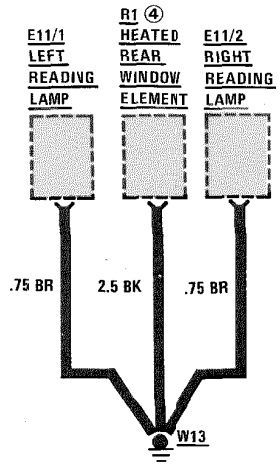

(AT RIGHT REAR PILLAR)

REVISIONS: ① STATION WAGON ONLY ② DIESEL ONLY ③ GASOLINE ONLY ④ EXCEPT STATION WAGON ⑤ AS OF MY 1992 ⑥ MODELS 400E/500E

GROUND DISTRIBUTION (W10)

AS OF MY 1990

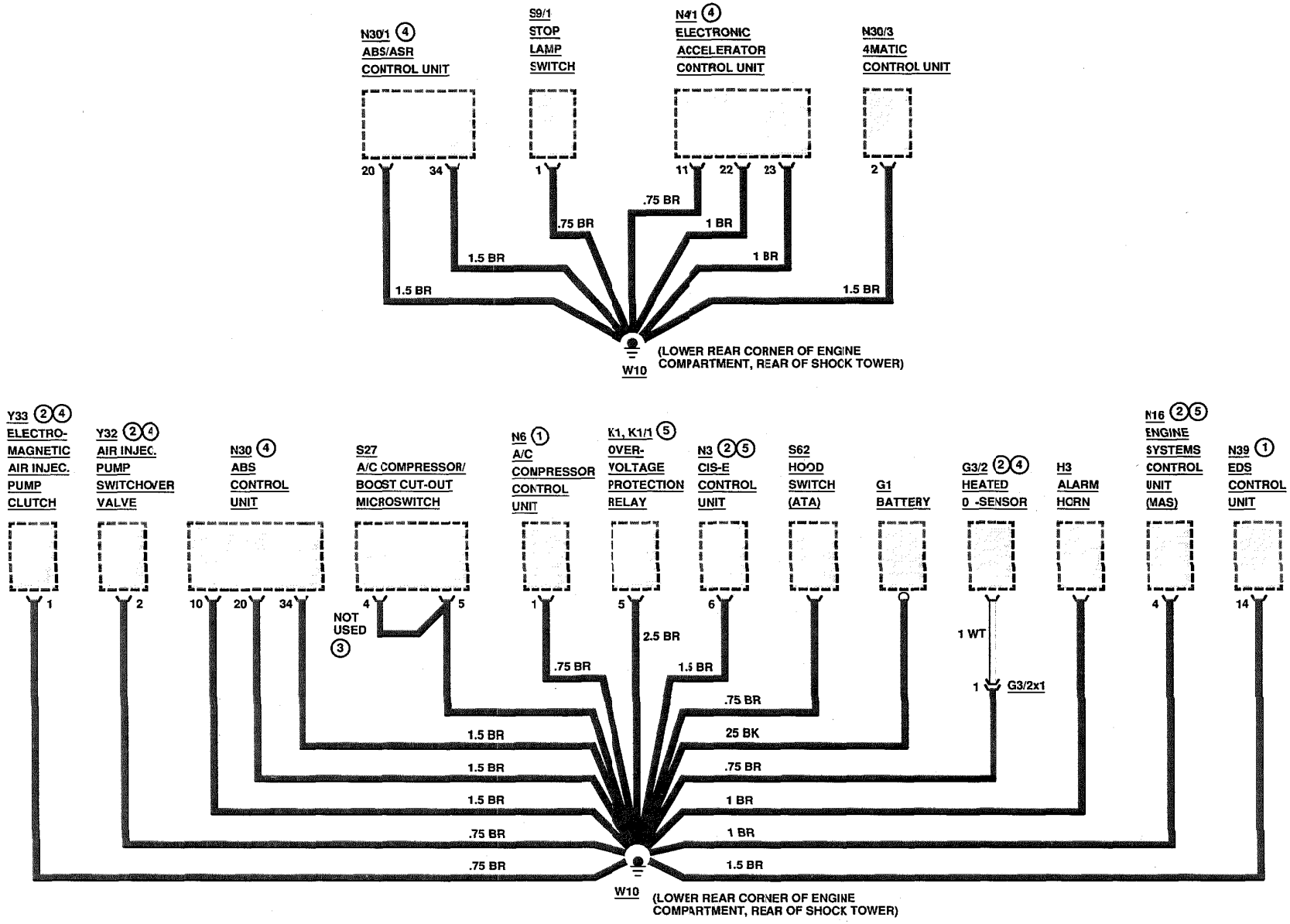

REVISIONS:
(1) DIESEL ONLY
(2) GASOLINE ONLY
(3) ASOF MY 1992
(4) MODELS 400E/500E, SEE GROUND DISTRIBUTION W16
(5) EXCEPT MODELS 400E/500E

GROUND DISTRIBUTION (W12)

AS OF 1990

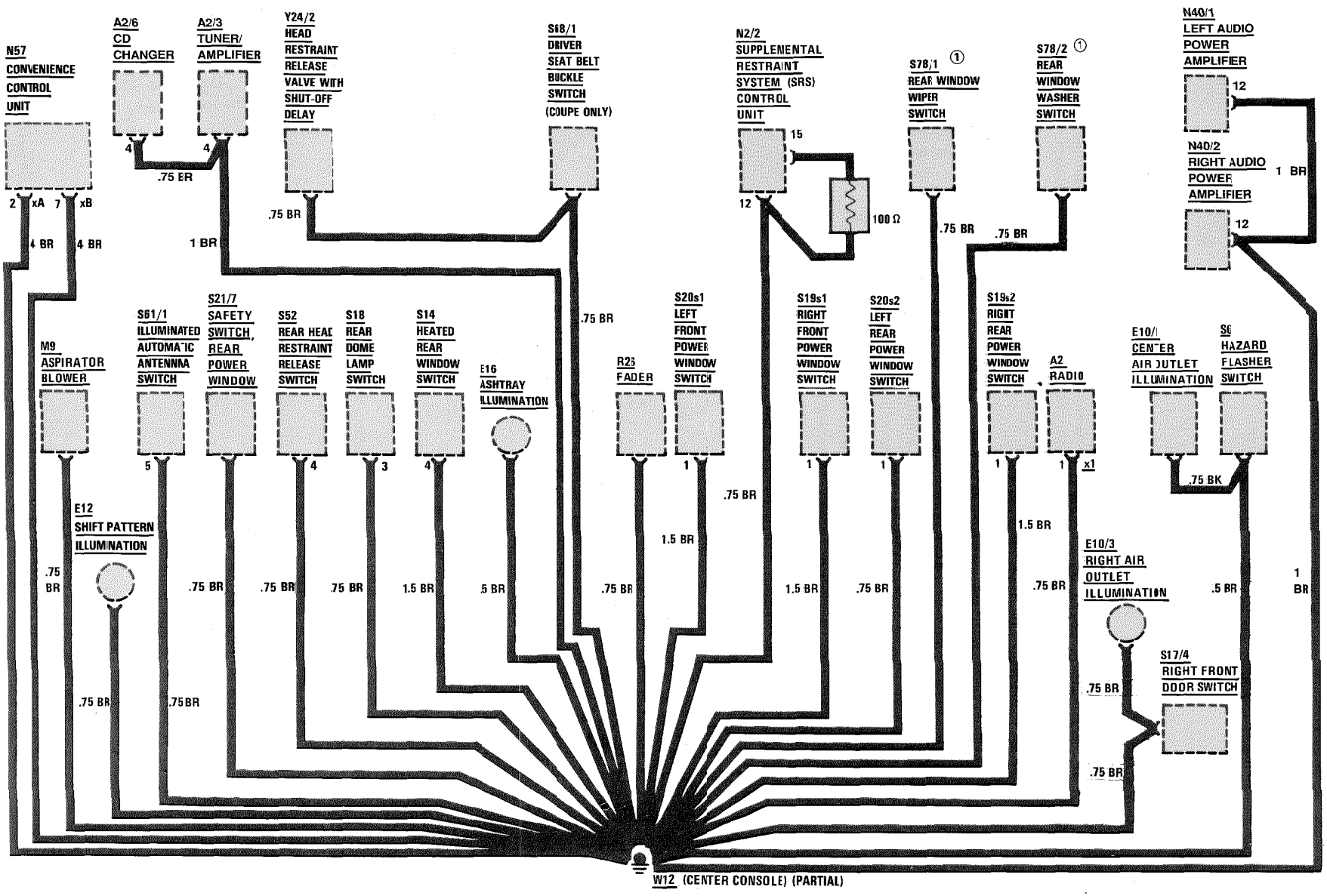

REVISIONS: ① STATION WAGON ONLY

GROUND DISTRIBUTION (W12)

AS OF MY 1990

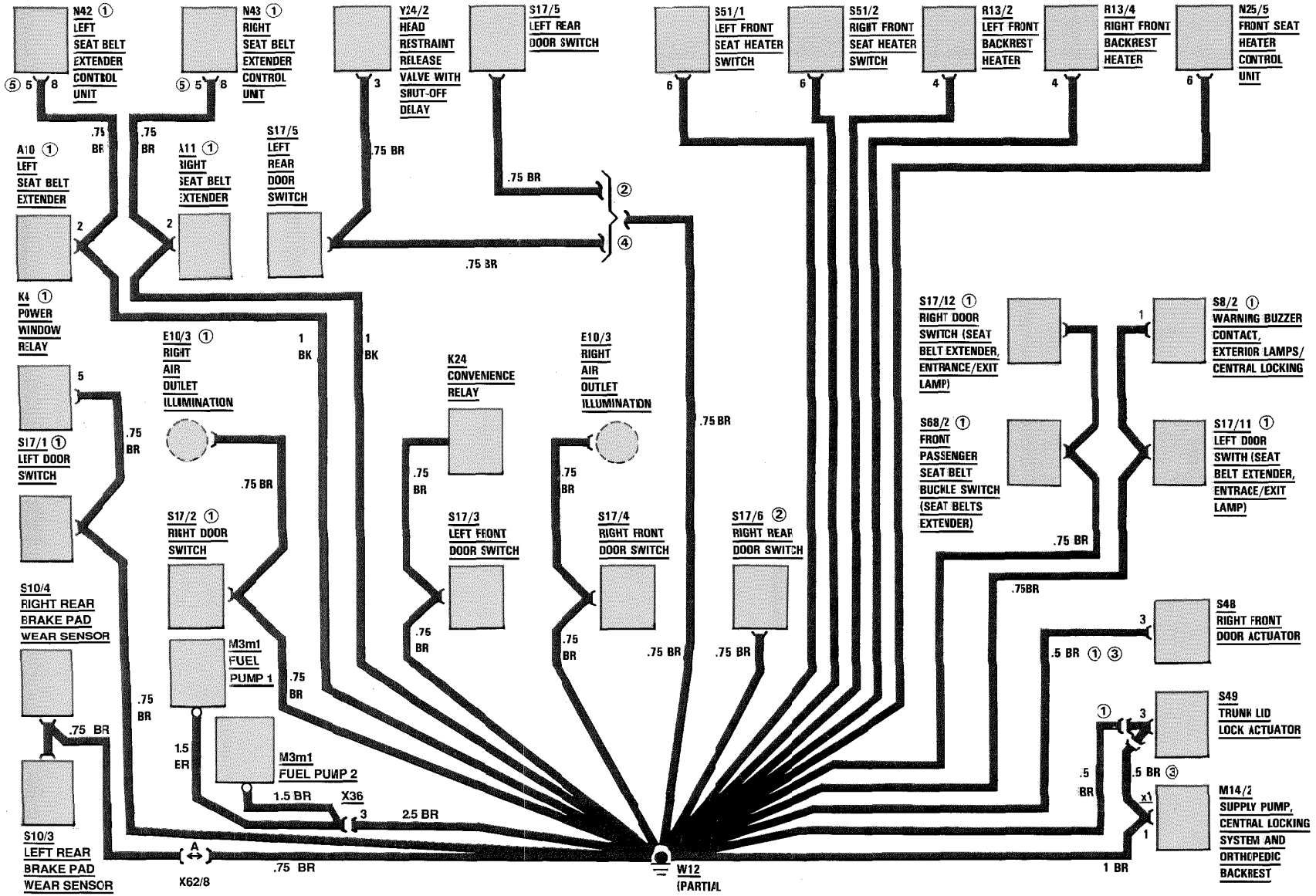

REVISIONS:

① 124.051
② 124.030/.090/.230/.290
③ 124.030/.230
④ 124.026/.128
⑤ AS OF MY 1991

GROUND DISTRIBUTION (W16 AND W27)

AS OF MY 1992

400E/500E

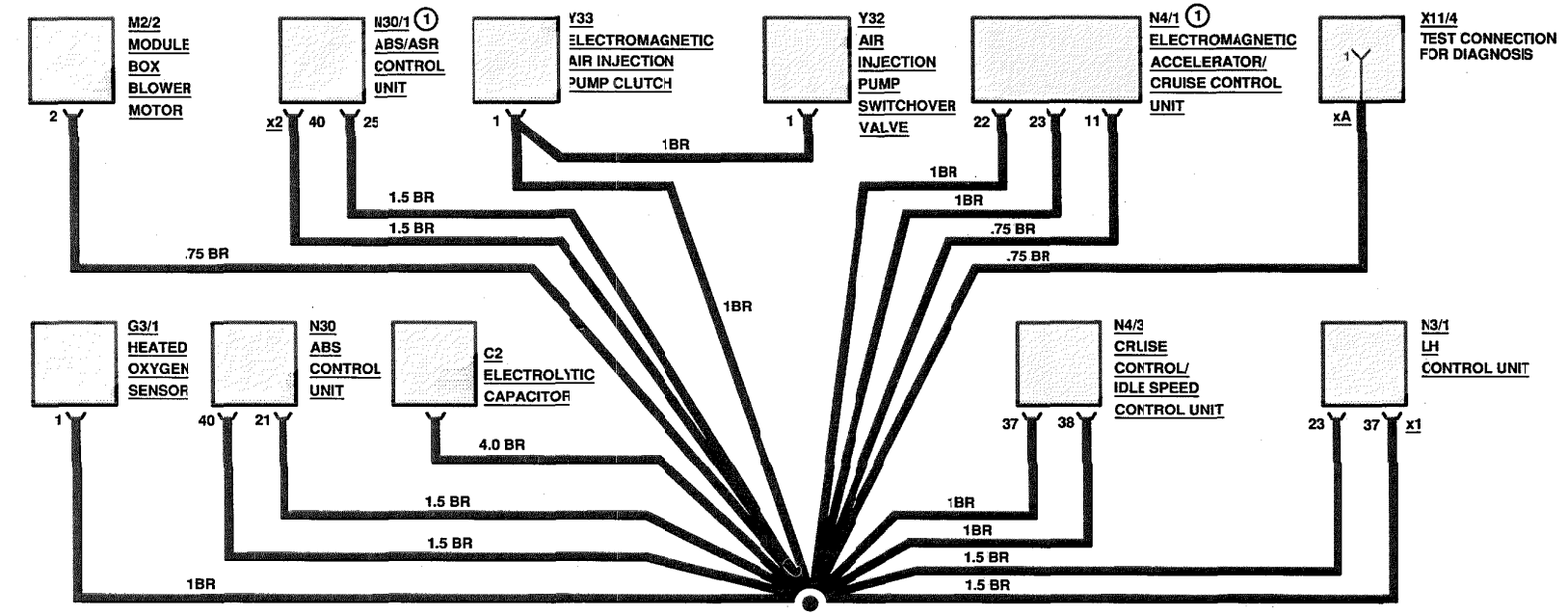

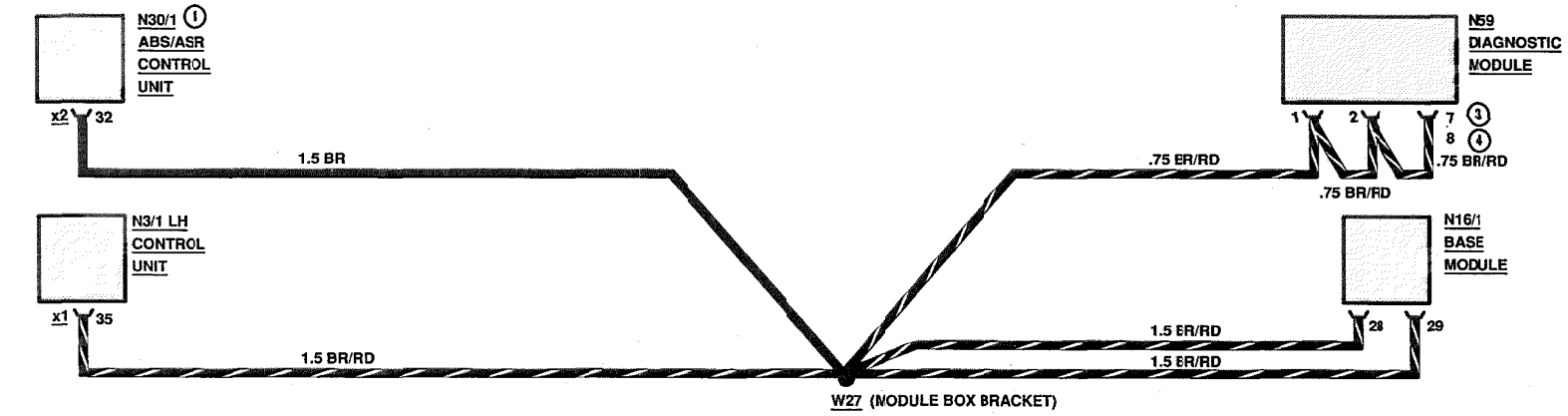

REVISIONS: ① W/ASR ④ MODEL 500E
② CALIFORNIA VERSION
③ MODEL 400E

THIS PAGE LEFT BLANK INTENTIONALLY

REVISIONS:

COMPONENT LOCATION

Component	Component Designation	Location	Page - Figure
A1	Instrument cluster	Left side of dashboard, forward of steering wheel	
A2	Radio	Center console	
A2/1	Line-out unit (Sound System)	MY 1990 with Sound System: back of radio chassis As of MY 1991: on top of Tuner/amplifier (A2/3)	
A2/3	Tuner and amplifier (trunk)	Right side of trunk	
A2/4	Radio control unit	Center console	
A2/6	CD changer (in trunk)	Right wheel well (6 cylinder) Under hatshelf (8 cylinder)	
A7	ABS hydraulic unit	Left front corner of engine compartment	231-2
A7/2	4MATIC hydraulic unit	Left front corner of engine compartment	
A7/3	ABS/ASR hydraulic unit	Left front corner of engine compartment	252-4
A9	A/C compressor	Lower left front of engine	
A9k1	Electromagnetic clutch	part of A9	230-4
A9l1	RPM sensor	part of A9	230-4
A10	Left seat belt extender	Behind left B-pillar	246-5
A11	Right seat belt extender	Behind right B-pillar	
A12	Tailgate closing assist	Center of tailgate, behind panel	243-5
A12s1	Tailgate closing assist switch	part of A12	
A12s2	Tailgate lock switch	part of A12	
A16	Knock sensors	On left side of engine block	250-4

COMPONENT LOCATION

Component	Component Designation	Location	Page - Figure
A16g1	Knock sensor 1 (left side of engine)	On engine block beneath intake manifold near cylinder #2	
A16g2	Knock sensor 2 (right side of engine)	On engine block beneath intake manifold near cylinder #5	
A28/1	Antenna splitter	On antenna mast	255-1
A34	Telephone handset	Center console	
A35	Transmit/receive unit (TRU)	Sedan/Coupe: Left trunk well Wagon: Right cargo area	254-5
A35/3	In-dash control unit	Front of Dome lamp (E15)	254-4
B2	Air flow sensor position indicator	part of B2/1, front of airflow sensor housing	232-1
B2/1	Air flow sensor with intake air temperature sensor (EDS)	Top of engine, behind right headlamp	249-1
B2/2	Air mass sensor with hot-wire	Top of engine, on intake manifold	249-2
B4	Fuel level sensor	Top of fuel tank	238-6
B5	Oil pressure sensor	At base of oil filter housing	237-6
B5/1	Pressure sensor (EDS)	On component compartment wall, forward of battery	247-3
B6	Hall-effect speed sensor	Rear of instrument cluster, behind speedometer	233-1
B10/1	Heater core temperature sensor	Center of dashboard, below radio	240-3
B10/4	In-car temperature sensor	Center of windshield header, part of dome lamp	235-1
B10/5	Outside temperature sensor	Right side of component compartment	232-3
B10/6	Evaporator temperature sensor	Right side of steering column	233-6

COMPONENT LOCATION

Component	Component Designation	Location	Page - Figure
B10/8	Coolant temperature sensor (climate control)	On cylinder head	245-4
B11/2	Coolant temperature sensor (EZL/CIS-E, LH)(4-pole)	Top rear of cylinder head (6 cylinder) Top front of engine (8 cylinder)	230-3 249-2
B11/4	Coolant temperature sensor (EDS)	Top left side of engine, on coolant elbow	248-2
B11/7	Preglow system temperature sensor	Top center of engine (MY 1987) Right front of engine, near thermostat housing in coolant pump outlet (As of MY 1990)	– – 247-6
B13	Coolant temperature gauge sensor	Left side of engine, above intake manifold	230-3
B14	Outside temperature sensor (outside temperature indicator)	Left front corner of front bumper	238-4
B17/2	Intake air temperature sensor (CIS-E)	On air filter housing	
B17/7	Intake air temperature sensor	Front of engine, behind radiator	248-3
B18	Altitude correction capsule	Right side of component compartment	229-4
C1	SRS energy accumulator	Front passenger footwell, behind right kick panel	244-3
C2	Electrolytic capacitor	Right side of component compartment	253-6
E1	Left headlamp unit	Left front of vehicle	
E2	Right headlamp unit	Right front of vehicle	
E3	Left taillamp unit	Left rear of vehicle	
E4	Right taillamp unit	Right rear of vehicle	
E10/1	Center air outlet illumination	Center dashboard	

COMPONENT LOCATION

Component	Component Designation	Location	Page - Figure
E10/2	Left air outlet illumination	Left side of dashboard	
E10/3	Right air outlet illumination	Right side of dashboard	
E11/1	Left rear reading lamp	Left C-pillar	
E11/2	Right rear reading lamp	Right C-pillar	
E12	Shift pattern illumination	Center console, below shift lever	
E13/2	Glove box lamp with switch	Top left of inside of glove box	
E14/1	Left sun visor with illuminated vanity mirror	part of sun visor	
E14/2	Right sun visor with illuminated vanity mirror	part of sun visor	
E15/2	Front dome lamp with shut-off delay and reading lamp	Center of windshield header	
E15/3	Rear dome lamp	Center of rear windshield header	
E15/4	Dome/reading lamp with seat belt reminder lamp	Center of windshield header	
E17/3	Left front entrance/exit lamp	Lower rear of left front door	
E17/4	Right front entrance/exit lamp	Lower rear of right front door	
E17/5	Left rear entrance/exit lamp	Lower rear of left rear door	
E17/6	Right rear entrance/exit lamp	Lower rear of right rear door	
E18/1	Trunk lamp	Inside of trunk	
E19/1	Left license plate lamp	Below left side of trunk lid lift handle	
E19/2	Right license plate lamp	Below right side of trunk lid lift handle	
E20	Exterior lamp switch illumination	Beneath exterior lamp switch	
E21	Center high mounted stop lamp	Center of rear hatshelf (sedan) Attached to tailgate (wagon)	
E25/1	Left C-pillar interior lamp	In left C-pillar	
E25/2	Right C-pillar interior lamp	In right C-pillar	

COMPONENT LOCATION

Component	Component Designation	Location	Page - Figure
E25/3	Left D-pillar interior lamp	In left D-pillar	
E25/4	Right D-pillar interior lamp	In right D-pillar	
F1	Fuse and relay box	Left side of component compartment	231-4
F2	Maxi-fuse box	In F1	
F13	Auxiliary fuse holder, power seats	Part of F1 (fuses E, F, G and H)	
F14	Auxiliary fuse holder, anti-theft alarm	Rear of fuse box, position E	
F15	Auxiliary fuse holder, blower motor/ACC/Tempmatic	Left side of component compartment	245-5
F22/1	Auxiliary fuse holder, heated seats	Left rear of engine compartment	
F22/2	Auxiliary fuse holder, telephone, terminal 30	In engine compartment, next to Fuse/Relay box (F1)	254-6
F23	Module box	Right side of component compartment	253-5
G1	Battery	Right side of component compartment	
G2	Alternator	Lower right front of engine	229-6
G3/2	Heated O_2-sensor	In exhaust pipe, rear of transmission	237-5
G3/2x1	Connector, O_2-sensor heater coil (2-pole)	Left side of front passenger footwell	233-4
G3/2x2	Connector, O_2-sensor signal (1-pole)	Left side of front passenger footwell	233-4
H1	Two-tone horn	Front of radiator	232-2
H3	Alarm horn	Left side of engine compartment	231-1
H4/5	Left door speaker	Driver's door panel	
H4/6	Right door speaker	Front passenger door panel	

COMPONENT LOCATION

Component	Component Designation	Location	Page - Figure
H4/7	Left rear speaker	Left rear of hatshelf	
H4/8	Right rear speaker	Right rear of hatshelf	
H4/9	Left front speaker	Left top corner of dahboard	
H4/10	Right front speaker	Right top corner of dashboard	
K1	Overvoltage protection relay (5-pole)	Right side of component compartment, behind battery	239-3
K1/1	Overvoltage protection relay, 87E (7-pole)	Right side of component compartment, behind battery	239-3
K1/2	Overvoltage protection relay, 87E/87L/30a (9-pole)	Right side of component compartment, behind battery Gasoline Diesel	 252-5 252-1
K2	Headlamp washer relay	Rear of fuse box, location D	
K4	Power window relay	Rear of fuse box, location F	231-5
K5	Power seat relay	Rear of fuse box, location A	
K9	Auxiliary fan relay	Rear of fuse box, location C	231-5
K10	Auxiliary fan preresistor relay	Rear of fuse box, location B	
K11/1	Left head restraint adjustment relay	Under left front seat	
K11/2	Right head restraint adjustment relay	Under right front seat	236-5
K12/1	Cruise control/engine overload protection relay	Right side of component compatment, near K1/1	251-5
K17	Air injection relay	Fuse/Relay box, position E	
K18	Seat belt warning relay	Left side of driver's footwell	
K24	Convenience relay	Rear of fuse box, location F	

COMPONENT LOCATION

Component	Component Designation	Location	Page - Figure
K27	Fuel pumps relay	Beneath right side of rear seat	248-4
K29	Transmission upshift delay relay	Right side of component compartment, near K1/1	249-6
K29/1	First gear start relay	Fuse/Relay box, position G	
K31	4MATIC funtion/test relay	Passenger footwell, behind kick panel	
L1	TDC sensor	Front left of engine	239-6
L2	Inductive speed sensor, transmission	Left side of transmission	253-4
L3	Starter ring gear speed sensor	Lower left side of bell housing	
L5	Crankshaft position sensor	Top of bell housing, behind oil filter	249-3
L5/1	Camshaft position sensor	On intake camshaft front cover Top left front of engine (8 cylinder)	250-6 249-2
L6	Rear axle speed sensor	Front of rear differential	237-3
L6/1	Left front wheel speed sensor	Left front steering knuckle	238-3
L6/2	Right front wheel speed sensor	Right front steering knuckle	
L7	Fuel rack position sensor	Lower left side of engine	247-2
M1	Starter	Lower left rear of engine, below oil filter	
M2	Blower motor	Center front of cowl, behind panel	232-3
M2/2	Module box blower motor	Right side of component compartment, behind Module box	253-5
M3/1	Fuel pump 1	Forwarxd of rear axle	238-5
M3/2	Fuel pump 2	Forward of rear axle	238-5

COMPONENT LOCATION

Component	Component Designation	Location	Page - Figure
M4	Auxiliary fan	Front of radiator	232-2
M4m1	Left auxiliary fan	Front of radiator	255-3
M4m2	Right auxiliary fan	Front of radiator	255-3
M5/1	Windshield washer pump	Front of windshield washer fluid reservoir	230-2
M5/2	Headlamp washer pump	Front of windshield washer fluid reservoir	230-2
M5/3	Rear window washer pump	Behind right rear quarter panel (wagon)	242-4
M6/1	Wiper motor	Center front of cowl, behind panel	232-3
M6/2	Left headlamp wiper motor	Left front of engine compartment	230-5
M6/3	Right headlamp wiper motor	Right front of engine compartment	230-1
M6/4	Rear window wiper motor	Center of tailgate, behind panel (wagon)	243-5
M9	Aspirator blower, in-car temperature sensor	Top of passenger footwell, behind dashboard	
M10/3	Left front power window motor	Left front door	240-6
M10/4	Right front power window motor	Right front door	
M10/5	Left rear power window motor	Left rear door	
M10/6	Right rear power window motor	Right rear door	
M11	Automatic antenna	Left side of trunk (sedan) Right rear quarter panel (wagon)	232-5 242-3
M12	Sliding/pop-up roof drive unit	Left front corner of trunk (sedan) Left rear quarter panel (wagon)	232-5 242-1
M13	Coolant pump	Right side of engine compartment	
M14/1, M14/2	Supply pump, central locking system	Below right side of rear seat	233-3

COMPONENT LOCATION

Component	Component Designation	Location	Page - Figure
M15	ASR charging pump	On brake booster, below master cylinder	253-1
M16	Cruise control actuator	Lower left side of engine	238-2
M16/1	Electronic accelerator/cruise control/idle speed control actuator	Lower left side of engine	
M20	Adjustable steering column motor	Left side of steering column	233-6
M21/2	Electrically adjustable and heated front passenger rearview mirror	In right side rearview mirror	
M24	Rear window sun shade motor	Under rear hatshelf, in trunk	245-6
M25	Left front power seat motor group	Under left front seat	232-6
M26	Right front power seat motor group	Under right front seat	236-5
N1/2	Electronic ignition control unit (EZL)	Left side of engine compartment, on fender	251-1
N1/3	EZL/AKR ignition control unit	Left side of engine compartment, on fender	251-1
N2/2	SRS control unit	Top of transmission tunnel, behind front console	240-2
N2/4	Warning module (seat belts, keys, lights)	Behind right side of instrument cluster	240-4
N3	CIS-E control unit	Right side of component compartment, behind battery	229-3
N3/1	LH control unit	Right side of component compartment, in Module box	250-1
N4	Cruise control amplifier	Behind lower left side of dashboard	234-3

COMPONENT LOCATION

Component	Component Designation	Location	Page - Figure
N4/1	Electronic accelerator/cruise control/idle speed contro unit	Right side of component compartment, behind battery (6 cylinder)	252-5
		Right side of component compartment, in Module box (8 cylinder)	250-1
N4/3	Cruise control/idle speed control unit	Right side of component compartment, in Module box	
N6	A/C compressor control unit	Right side of component compartment, behind battery	239-3
N7	Exterior lamp failure monitoring unit	Rear of fuse box, position K	
N10	Combination relay (turn/hazard signal, heated rear window, wiper motor)	Rear of fuse box, position H	
N13	Rear window intermittent wiper timer	Left corner of tailgate, behind panel (wagon)	241-5
N14	Preglow time-limit relay	Left sice of engine compartment. on inner fender	
N16	Engine systems control unit (MAS)	Right side of component compartment, behind battery	255-2
N16/1	Base module	Right side of component compartment, in Module box	250-1
N16/3	Fuel pump relay	Right side of component compartment, behind battery	229-3
N16/4	Fuel pump relay with kickdown cut-out	Right side of component compartment, behind battery	229-3
N22	ACC pushbutton control unit	Center console, above radio	
N24	SRS voltage converter	Front passenger footwell, behind right kickpanel	240-1
N25/1	Left front seat heater relay	Beneath carpeting, forwward of left front seat	239-2

COMPONENT LOCATION

Component	Component Designation	Location	Page - Figure
N25/2	Right front seat heater relay	Beneath carpeting, forwward of right front seat	
N25/5	Front seat heater control unit	Under left side of rear seat	246-1
N26	Anti-theft alarm control unit	Behind front passenger footrest	240-1
N27	Anti-towing sensor	Below left side of rear seat (M.Y. 1986 only)	233-2
N30	ABS control unit	Right side of component compartment: behind battery (6 cylinder) in Module box (8 cylinder)	 239-3
N30/1	ABS/ASR control unit	Right side of component compartment: behind battery(6 cylinder) in Module box (8 cylinder)	 252-5 250-1
N30/2	ASD control unit	Right side of component compartment, behind battery	252-1
N30/3	4MATIC control unit	Right side of component compartment, forward of ABS control unit (N3)	
N32/1	Left front power seat control unit (with memory)	Under left front seat	
N32/3	Left front power seat control unit (with memory and steering column adjustment)	Under left front seat	232-6
N35	Daytime running lamp control unit	Behind front passenger footrest	254-1
N39	EDS control unit	Right side of component compartment, behind battery	247-5
N40	Audio power amplifier (circuit 58D)	Behind instrument cluster, on steering column	240-4
N40/1	Audio power amplifier, left speakers	Right side of trunk Sedan: Coupe:	 254-1 247-5

COMPONENT LOCATION

Component	Component Designation	Location	Page - Figure
N40/2	Audio power amplifier, right speakers	Right side of trunk Sedan: Coupe:	 254-2 254-3
N40/3	Audio power amplifier, left/right speakers	Right side of trunk	
N42	Left seat belt extender control unit	Behind left rear interior panel	246-6
N43	Right seat belt extender control unit	Behind right rear interior panel	
N49	Steering angle sensor	Plastic slip ring on steering column, behind steering wheel	
N57	Convenience control unit: ATA, central locking system, power windows, sliding/pop-up roof	Beneath left side of rear seat	
N59	Diagnostic module, California version (engines 104/119 and engine 120 Federal/California)	Right front footwell, next to N26	
R1	Heated rear window element	Part of rear windshield	
R2/2	Left heated windshield washer nozzle	Part of left windshield washer nozzle	232-4
R2/3	Right heated windshield washer nozzle	Part of right windshield washer nozzle	
R2/4	Left heated washer nozzle hose	Under left side of engine hood	246-4
R2/5	Right heated washer nozzle hose	Under right side of engine hood	246-4
R2/6	Heated check valve	Under left side of engine hood	246-4
R2/7	Heated windshield washer pump hose	Clipped to right engine hood hinge	246-4
R3	Illuminated cigar lighter	Center console, in ashtray	
R9	Glow plugs	Top of engine, at each cylinder intake	
R11	Driver-side heated mirror	part of driver's mirror	235-2
R12/1	Left front emergency tensioning retractor (ETR) squib	In base of left B-pillar, part of ETR	

COMPONENT LOCATION

Component	Component Designation	Location	Page - Figure
R12/2	Right front emergency tensioning retractor (ETR) squib	In base of right B–pillar, part of ETR	236-2
R12/3	Driver airbag squib	Center of steering wheel, beneath airbag	236-1
R12/4	Front passenger airbag squib 1	Right side of dashboard, behind airbag	247-1
R12/5	Front passenger airbag squib 2	Right side of dashboard, behind airbag	247-1
R13/1	Left front seat cushion heater element	In left front seat	
R13/2	Left front backrest heater element	In left front seat backrest	
R13/3	Right front seat cushion heater element	In right front seat	
R13/4	Right front backrest heater element	In right front seat backrest	
R15	Auxiliary fan preresistor	Lower left front corner of engine compartment	231-2
R16/1	Reference resistor (EZL)	Left side of component compartment	231-3
R16/2	Reference resistor (EZL/AKR)	Round plug on N1/3	
R17/1	Reference resistor (CIS-E)	Right side of component compartment, in front of cowl	229-4
R18/1	Resistance trimming plug, electronic idle speed control (ELR)	Left side of component compartment, in front of brake fluid reservoir	243-3
R18/2	Reference resistor (EGR)	Right side of component compartment, behind battery	
R25	Accelerator pedal position sensor	Top left side of engine, beneath accelerator linkage	251-6
R26	Fader switch	Center console, rear of transmission shift lever	

COMPONENT LOCATION

Component	Component Designation	Location	Page - Figure
S1	Exterior lamp switch	Left side of dashboard, left of steering column	234-3
S2/1	Ignition/starter switch	Left side of dashboard, right of steering column	234-1
S2/2	Glow/starter switch	Left side of dashboard, right of steering column	234-1
S4	Combination switch	Left side of steering column	
S4s6	Horn contact	Center of steering wheel, beneath airbag	
S5/3	High-voltage distributor	Top front of engine	229-6
S5/5	Left high-voltage distributor	Top left front of engine	250-5
S5/6	Right high-voltage distributor	Top right front of engine	250-5
S6	Hazard flasher switch	Center console, above radio	
S7/3	4MATIC function/test selection switch	Right side of component compartment	251-3
S8/1	Warning buzzer contact, exterior lamps	Part of S2/1, S2/2	234-1
S8/2	Warning buzzer contact, exterior lamps/central locking system	Part of S2/1, S2/2	234-1
S9	Stop lamp switch	Top of brake pedal, on bracket	240-5
S9/1	Stop lamp switch (4MATIC/ASD)	Top of brake pedal, on bracket	
S10/1	Left front brake pad wear sensor	In left front brake pad	
S10/2	Right front brake pad wear sensor	In right front brake pad	
S10/3	Left rear brake pad wear sensor	In left rear brake pad	
S10/4	Right rear brake pad wear sensor	In right rear brake pad	
S11	Brake fluid level switch	Left side of component compartment, top of brake fluid reservoir	231-3

COMPONENT LOCATION

Component	Component Designation	Location	Page - Figure
S12	Parking brake switch	Driver's footwell, at left kickpanel	234-4
S13/2	Sliding/pop-up roof switch	Center of windshield header, part of E15/2	
S14	Heated rear window switch	Center console, above radio	
S16/1	Starter lock-out/backup lamp switch	Left side of transmission	238-1
S16/2	Backup lamp switch	Left side of transmission	244-2
S16/3	Starter lock-out/backup lamp switch, selector lever position recognition		
S16/6	Kickdown switch	Under top of accelerator pedal	239-1
S16/7	Kickdown switch/transmission mode	Under top of accelerator pedal	
S16/8	"B" engagement switch		
S17/1	Left door switch	In left front door jamb	235-4
S17/2	Right door switch	In right front door jamb	
S17/3	Left front door switch	In left front door jamb	235-4
S17/4	Right front door switch	In right front door jamb	
S17/5	Left rear door switch	In left rear door jamb	
S17/6	Right rear door switch	In right rear door jamb	
S17/7	Left door switch (power seat relay)	In left front door jamb	235-4
S17/8	Trunk lamp switch	Left underside of trunk lid	236-6
S17/10	Right door switch (power seat relay)	In right front door jamb	
S17/11	Left door switch (seat belt extender, entrance/exit lamp)	In left door jamb (coupé)	
S17/12	Right door switch (seat belt extender, entrance/exit lamp)	In right door jamb (coupé)	
S18	Rear dome lamp switch	Center console, above radio	

COMPONENT LOCATION

Component	Component Designation	Location	Page - Figure
S18/1	Rear dome lamp switch with illumination	Center console, above radio	
S19s1	Right front power window switch	Center console	
S19s2	Right rear power window switch	Center console	
S20s1	Left front power window switch	Center console	
S20s2	Left rear power wirdow switch	Center console	
S21/1	Left front power window switch	Center console	
S21/2	Right front power window switch	Center console	
S21/3	Left rear power window switch	Left rear door	
S21/4	Right rear power window switch	Right rear door	
S21/5	Left rear power window switch (front console)	Center console	
S21/6	Right rear power window switch (front console)	Center console	
S21/7	Center console safety switch, rear power windows	Center console	
S22	Left front power seat switch	Left front door	
S23	Right front power seat switch	Right front door	
S24	Fresh/recirculated air switch	Center console, above radio	
S25/5	105/115 °C Temperature switch auxiliary fan high speed/emergency cut-out	Top left side of engine	230-3
S25/6	50 °C Temperature switch	Lower left rear of engine	
S26/1	Heated windshield washer system thermoswitch	Under left rear corner of engine hood	246-3
S27	A/C compressor/boost cut-out microswitch	Lower left side of engine	
S27/1	A/C compressor cut-out microswitch	Lower left side of engine	
S27/2	Deceleration shut-off microswitch	Top left rear of engine, on bracket above intake manifold	232-1

COMPONENT LOCATION

Component	Component Designation	Location	Page - Figure
S27/3	Microswitch (EGR)	Top rear of engine, on throttle linkage bracket	248-6
S29/2	Throttle valve switch, full load/idle	Left side of engine, lower left of airflow sensor housing	231-6
S29/3	Idle speed contact switch	Top of accelerator pedal	251-4
S31/1	Refrigerant pressure switch, 2 function (off 2.0/30.0 bar, on 2.6/22.0 bar)	Lower left front of engine compartment	230-6
S32	Refrigerant high pressure switch, auxiliary fan (off 15.0 bar/on 20.0 bar) (green)	Lower left front of engine compartment	230-6
S32/1	Refrigerant high pressure switch, A/C compressor (off 12.0 bar/on 16.0 bar)	Lower left front of engine compartment	
S40	Cruise control switch V Decelerate/set B Accelerate/set SP Resume A Off	Left side of steering column	
S40/1	Clutch pedal switch (cruise control)	Top of clutch pedal bracket	
S41	Coolant level switch	Right side of engine compartment, lower front of coolant reservoir	229-5
S42	Washer fluid level switch	Top of windshield washer fluid reservoir	229-5
S43	Oil level switch	Left side of oil pan	238-2
S47	Left front door actuator	In left front door	235-3
S48	Right front door actuator	In right front door	
S49	Trunk lid lock actuator	Center of rear trunk panel (sedan) In tailgate (wagon)	236-6 241-5
S50	Outside mirror control switch	Center console	
S51/1	Left front seat heater switch	Center console	

COMPONENT LOCATION

Component	Component Designation	Location	Page - Figure
S51/2	Right front seat heater switch	Center console	
S51/5	Driver seat contact switch, seat belt extender	In left front seat	
S52	Rear head restraint release switch	Center console, above radio	
S52/5	Rear head restraint release switch	Under rear hatshelf	
S59	Adjustable steering column switch	Lower left side of steering column	
S61	Automatic antenna switch	Center console, above radio	
S62	Hood switch (ATA)	Left side of component compartment	231-4
S62/1	Left front door switch (ATA)	Left door jamb	
S62/2	Right front door switch (ATA)	Right door jamb	
S62/3	Trunk lid switch (ATA)	Tailgate latch (wagon)	
S65	Transmission overload protection switch	Left front of transmission	251-2
S66	Engine overload protection switch	Top left side of engine	
S68/1	Driver seat belt buckle switch (seat belt warning buzzer)	Left front seat belt buckle (coupé)	
S68/2	Front passenger seat belt buckle switch (seat belt extender)	Right front seat belt buckle (coupé)	
S68/3	Driver seat belt buckle switch (airbag/ETR)	Left front seat belt buckle	
S68/4	Front passenger seat belt buckle switch (airbag/ETR)	Right front seat belt buckle	
S76	Snow chain switch (ASR) with indicator	Center console, above radio	
S78/1	Rear window wiper switch I Continuous wipe II Intermittent wipe	Center console, above radio (wagon)	
S78/2	Rear window washer switch	Center console, above radio (wagon)	
S79	Rear window sun shade switch (center console)	Center console, above radio	
S88/2	Trunk lid lock switch (convenience)	Part of trunk lock	

COMPONENT LOCATION

Component	Component Designation	Location	Page - Figure
T1	Ignition coil	Left side of engine compartment	231-1
T1/1	Ignition coil 1 (right cylinder bank)	Left side of engine compartment, behind headlamp	250-3
T1/2	Ignition coil 2 (left cylinder bank)	Left side of engine compartment, behind headlamp	250-3
V1	Convenience diode	Rear of fuse box, location I	233-5
V5	Disconnect diode	Fuse/Relay box, position I	
W1	Main ground (behind instrument cluster)	Behind left side of instrument cluster	235-5
W2	Ground, at right headlamp unit	Lower right front of engine compartment	230-1
W3	Ground, left front wheelhousing (at ignition coil)	Left side of engine compartment, on ignition coil bracket	234-5
W4	Ground, front dome lamp	Center of windshield header, above front dome lamp	235-1
W5	Ground, engine	Front of engine, on A/C compressor	230-4
W6	Ground, left rear wheelhousing in trunk	Left side of trunk, below hinge (sedan) Behind left rear quarter panel (wagon)	232-5 242-1
W7	Ground, right rear wheelhousing in trunk	Right rear side of trunk (sedan) Behind right rear quarter panel (wagon)	235-6 242-3
W8	Ground, tailgate (cable connector)	Left corner of tailgate, behind panel	241-5
W9	Ground, at left headlamp unit	Lower left front of engine compartment, near headlamp	230-5

COMPONENT LOCATION

Component	Component Designation	Location	Page - Figure
W10	Ground, battery	Right side of component compartment, rear of shock tower	229-1
W11	Ground, engine (connection point for ground wires)	Left front of engine, on intake manifold	232-1
W12	Ground, center console	Behind lower front of console	240-2
W13	Ground, heated rear window	At right C–pillar, near edge of glass	237-1
W14	Ground, ABS hydraulic unit bracket	Lower left front corner of engine compartment	231-2
W16	Ground, component compartment	Right side of component compartment	250-1
W27	Ground, module box bracket	Right side of component compartment	250-1
X1/4	Connector, automatic antenna	Center of dashboard, rear of radio	
X1/5	Connector, sound system feed (amplifier), terminal 30	Next to connector X30	
X4	Terminal block, terminal 30, fuse and relay box (2-pole)	Top of driver's footwell, forward of parking brake lever	234-4
X4/10	Terminal block, terminal 30/terminal 61 (battery)	Right side of component compartment, below W10	229-2 249-6
X4/13	Terminal block, terminal 87	Right side of component compartment, on rear firewall	229-4
X6	Terminal block, terminal 58d (2-pole)	Center of dashboard, below radio	240-3
X6/1	Terminal block, terminal 58D (2-pole)	Center of dashboard, left of ashtray	241-1
X6/2	Connector, terminal 58R (1-pole)	Below rear of fuse box	
X8	Terminal block, tailgate	Top left rear of roof, above headliner	241-6
X8/2	Connector, backup lamp/rear window wiper (1-pole)	Top of driver's footwell	
X8/3	Connector, combination switch/rear window wiper (1-pole)	Top of driver's footwell	

COMPONENT LOCATION

Component	Component Designation	Location	Page - Figure
X11	Diagnostic socket/terminal block (circuit TD)	On left inner fender	234-5
X11/4	Test connection for diagnosis, (impulse readout, 16-pole)	Right side of component compartment, left of battery (6 cylinder)	245-2
X11/4s1	Pushbutton switch with LED (California)	part of X11/4	245-2
X11/4	Test connection for diagnosis, (impulse readout, 38-pole)	Top of Module box (8 cylinder)	249-5
X11/11	Test connection, TD (EDS, 1-pole)	Right side of component compartment, left of battery	
X11/13	Test connection, SRS plug connection (10-pole)	Beneath front passenger footrest	244-3
X11/18	Connector, ABS/ASR/electronic accelerator - chassis (6-pole)	Forward of passenger side airbag, on firewall	
X11/21	Diagnostic module test connection (3-pole) - California	Right side of component compartment, in front of Module box	249-5
X11/21s1	Pushbutton (with LED) - California	part of X11/21	249-5
X13	Connector, cigar lighter	Behind center of dashboard, near ashtray	
X18	Connector, interior/taillamp harness (8-pole)	Lower part of fuse box	233-5
X20	Connector, stop lamp switch (2-pole)	Driver's footwell, on stop lamp switch	234-2
X20/1	Connector, center high-mounted stop lamp	Lower part of fuse box	2303-5
X21/2	Terminal block, stop lamp switch/electronic speedometer	Behind instrument cluster	
X22/1	Connector, transmission overload protection (2-pole)	Left side of component compartment, beneath Fuse/Relay box (F1)	
X22/6	Connector, transmission overload switch (starter lock-out/kickdown harness) (3-pole)	On transmission, near steering lock	
X24	Connector, headlamp harness (6-pole)	Lower part of fuse box	239-5
X25	Connector, preglow harness	On left inner fender	

COMPONENT LOCATION

Component	Component Designation	Location	Page - Figure
X26	Connector, interior/engine (12-pole)	Lower part of fuse box	239-5
X26/6	Connector, engine harness/Tempmatic (3-pole)	Lower part of fuse box	245-3
X26/17	Engine plug connection	Right side of component compartment, behind Module box	
X26/18	Connector, interior/transmission (8-pole)		
X27	Connector, starter harness	Left side of component compartment, near brake booster	231-3
X28/1	Connector, ETR voltage supply (2-pole)	Behind left side of dashboard, near steering column	
X28/4	Connector, driver airbag squib	Center of steering wheel, beneath slip ring	
X28/5	Airbag squib slip ring (2-pole)	Center of steering wheel, beneath air bag	
X28/6	Connector, seat belt warning unit/seat belt warning unit relay	Upper part of driver's footwell	
X28/7	Connector, airbag/test connection	In loom tie attached to harness, forward of passenger side airbag	
X30	Connector block for optional electrical equipment	Behind driver's left kickpanel	234-2
X30/1	Connector, multi-function block	Behind driver's left kickpanel	
X32	Connector, trunk/reading lamp	Pig-tail connection behind rear dome lamp	
X33/4	Connector, cruise control (manual transmission) (2-pole)	Upper part of driver's footwell	
X33/14	Connector, cruise control, cockpit/engine (10-pole)	Forward of passenger side airbag, on firewall	
X34	Connector, right front door contact switch	In right front door jamb	246-2
X35/7	Plug connection, cockpit/module box (12-pole)	Forward of passenger side airbag, on firewall	

COMPONENT LOCATION

Component	Component Designation	Location	Page - Figure
X35/8	Plug connection, cockpit/module box, electronic accelerator/cruise control/idle speed control (14-pole)	Forward of passenger side airbag, on firewall	
X36	Connector, fuel pump harness (1-pole)	Behind passengers right kickpanel (On early vehicles: in right component compartment)	229-3
X36/3	Connector, fuel pump harness (2-pole)	Beneath right side of rear seat	248-4
X39/16	Connector, telephone voltage supply (1-pole)	Behind driver's left kickpanel	
X42	Connector, anti-theft alarm, front/rear	Beneath passengers footrest	244-3
X42/2	Connector, right rear door contact switch/dome lamp(ATA) (1-pole)	In right B-pillar	
X42/9	Connector, left front door ATA harness	In driver's left kickpanel, near floor	
X42/10	Connector, right front door ATA harness	In passengers right kickpanel, near floor	240-1
X42/11	Connector, tailgate ATA harness (3-pole)	Top right rear of roof, above headliner	243-6
X42/13	Connector, ATA/radio (1-pole)	Rear of radio	244-6
X42/14	Connector, ATA/trunk lamp	In left front corner of trunk	
X42/15	Connector, ATA/switched ground	Left component compartment	239-5
X43	Connector, central locking system (ATA)	Beneath right side of rear seat	233-3
X44	Connector, central locking system (supply pump)	Beneath right side of rear seat	
X46	Connector, ABS warning lamp (1-pole)	Behind dashboard, forward of parking brake lever	234-4
X47	Connector, rear speed sensor harness (2-pole)	Beneath right side of rear seat	233-3
X47/2			
X48F		Right rear door sill area	
X48G		Behind radio	

COMPONENT LOCATION

Component	Component Designation	Location	Page - Figure
X48H		Behind radio	
X48I		Rear of center console	
X48K		Sensors ground, CIS-E	
X48L		EZL reference resistor	
X48M		Ground, start valve/fuel pump relay	
X49/1	Connector, backup lamp switch	Top of driver's footwell, right of steering column	
X49/2	Connector, backup lamp/starter lock-out switch	Top of driver's footwell, right of steering column	234-2
X53/1	Connector, Hall-effect sensor/automatic climate control	Connected to X53/5	
X53/2	Connector, Hall-effect sensor/Tempomat (cruise control)	Connected to X53/5	
X53/5	Multipoint connector, Hall-effect sensor	Behind right side of instrument cluster	240-4
X53/6	Connector, Hall-effect sensor/CIS-E (1-pole)	Connected to X53/5	
X55	Connection board, left front power seat	Beneath left front seat	245-1
X55/1	Connection board, right front power seat	Beneath right front seat	236-5
X56	Connector, throttle valve switch	On intake manifold, near airflow sensor	234-6
X62/3	Connector, rear axle speed sensor, ASR (6-pole)	Behind front passengers right kickpanel	252-2
X62/6	Connector, right front wheel speed sensor (component compartment)	Right side of component compartment	250-1
X62/7	Connector, left front wheel speed sensor (component compartment)	Component compartment	
X62/8	Connector, rear axle multiple circuit junction	Underside of car, forward of fuel pump package	252-6
X62/11	Terminal block, rear axle speed sensor (ABS) (2-pole)	Behind passengers right kickpanel	

COMPONENT LOCATION

Component	Component Designation	Location	Page - Figure
X63	Connector, serial data feed CIS-E/EZL (1-pole)	Top of driver's footwell, next to steering column	234-2
X63/1	Connector, CAN databus, EZL/LH (3-pole)	Right front footwell	
X64	Connector, blower speed control/interior harness	Above and rearward of brake booster	
X81/1	Connector, engine harness/cruise control (1-pole)	Near connector X30	
X83/2	Connector, ABS/ASD/ASR warning lamp, right footwell (3-pole)	Top of driver's footwell, forward of parking brake release lever	
X83/3	Connector, instrument cluster/4MATIC warning lamp (3-pole)	Top of driver's footwell, forward of parking brake release lever	
X83/5	Connector, instrument cluster/ABS/ASR warning lamp (3-pole)	Top of driver's footwell, forward of parking brake release lever	
X86	Connector, central locking system rear (3 pin)	Right side of tailgate header, above headliner	243-6
X88/3	Connector, windshield washer fluid level control (2-pole)	Near coolant level switch, coolant reservoir	
X88/5	Connector, left front brake pad wear sensor	Below right side of fuse box, on left inner fender	237-2
X89/1	Connector, electronic accelerator control unit/ASR (2-pole)	Right side of component compartment, behind battery	253-3
X89/2	Connector, electronic accelerator control unit/engine harness (2-pole)	Right side of component compartment, behind battery	253-3
X95	Connector, CHECK ENGINE	On right inner firewall, near battery	
X132	Connector, right front brake pad sensor (2 pin)	On right inner firewall, forward of battery	229-1
Y1	Electrohydraulic actuator (EHA)	Top of engine, rear of fuel distributor	234-6
Y3	Kickdown valve (automatic transmission)	Right rear corner of transmission	237-4

COMPONENT LOCATION

Component	Component Designation	Location	Page - Figure
Y3/2	Upshift delay solenoid valve	On left side of transmission	251-2
Y3/3	Upshift delay switchover valve	Left side of component compartment	249-4
Y6	Idle speed air valve	Top left front of engine, left of engine oil dipstick	231-6
Y7	Switchover valve unit (7 connections)	Above passenger footwell area	
Y8	Start valve	Top center of engine, rear of fuel distributor	231-6
Y19	Mono valve (ACC)	Right side of component compartment, next to battery	229-1
Y22	Electromagnetic actuator, electronic idle speed control (ELR)	Lower left side of engine	
Y24/2	Head restraint release valve with shut-off delay	Below left side of rear seat	233-2
Y24/3	Seat backrest locking valve	Below left side of rear seat	
Y27	EGR switchover valve	Right front fender, behind air filter housing	248-1
Y27/4	Boost pressure control switchover valve	Right front engine compartment, nect to fan shroud	248-5
Y27/5	Pressure control flap switchover valve	Right front fender, forward of air filter housing	248-5
Y29	Vacuum amplifier switchover valve (automatic transmission)	Left side of engine compartment, on inner fender	
Y30	Engine overload protection switchover valve	Left side of engine compartment, on component compartment wall	
Y31	Air recirculation valve vacuum transducer	Right side of engine compartment, rear of right headlamp	
Y31/1	EGR valve vacuum transducer	Right front fender, behind airfilter housing	247-4

COMPONENT LOCATION

Component	Component Designation	Location	Page - Figure
Y31/2	Pressure control flap vacuum transducer	Right side of engine compartment, rear of right headlamp	247-4
Y31/4	Boost pressure control vacuum transducer	Right side of engine compartment, rear of right headlamp	247-4
Y32	Air injection pump switchover valve	Right front fender, behind headlamp	248-1
Y33	Electromagnetic air injection pump clutch	Front of air injection pump, above alternator	250-2
Y38	ASD valve	Rear underside of car, next to fuel pump package	252-3
Y49	Solenoid, adjustable camshaft timing	Attached to intake camshaft front cover	250-6
Y49/1	Solenoid, left adjustable camshaft timing	Attached to left intake camshaft cover	249-2
Y49/2	Solenoid, right adjustable camshaft timing	Attached to left intake camshaft cover	249-2
Y58	Tank breather valve		
Y58/1	Purge switchover valve	On right side of component compartment wall, above N1/2, N1/3	253-2
Y62	Fuel injection valves (LH)	Top of engine	249-2
Z	Connector sleeve (solder joint in harness)		
Z6	Connector sleeve, ground (solder joint in harness)		
Z6/8	Connector sleeve, sensor ground (solder joint in harness)	Inside N39 plug	
Z6/9	Connector sleeve, ground W10 (solder joint in harness)	ATA/comfort system, right rear door sill area	
Z7	Connector sleeve, terminal 30 (solder joint in harness)	Cable tray above intake manifold, area of rear most bolt hole	

COMPONENT LOCATION

Component	Component Designation	Location	Page - Figure
Z7/1	Connector sleeve, terminal 30, central locking system (solder joint in harness)	80 mm from Z6	
Z7/4	Connector sleeve, terminal 87, engine (LH)		
Z7/5	Connector sleeve, terminal 87, engine (LH)		
Z7/6	Connector sleeve, terminal 87, chassis (LH)	240 mm from Z6	
Z7/15	Connector sleeve, terminal 87 (LH)	160 mm from Z6	
Z13	Connector sleeve 5 (solder joint in harness)	Ground, throttle switch/CIS-E (30cm towardsd N3 from end of cable tray)	
Z22	Cable protectively tied back to harness		
Z24/1	Connector sleeve, ATA arm		
Z24/2	Connector sleeve, ATA disarm		
Z82	Connector sleeve, ATA/central locking system, trunk	On floor, near right "B" pillar	
Z82/1	Connector sleeve, ATA/central locking system, left frort door	On floor, near right "B" pillar	
Z82/2	Connector sleeve, ATA/central locking system, right front door	On floor, near right "B" pillar	
Z82/6	Connector sleeve, warning buzzer contact/illumination	Central locking, right rear door sill area	
Z94	Connector sleeve, brake lamp switch closer		
Z95	Connector sleeve, brake lamp switch opener		

COMPONENT LOCATION

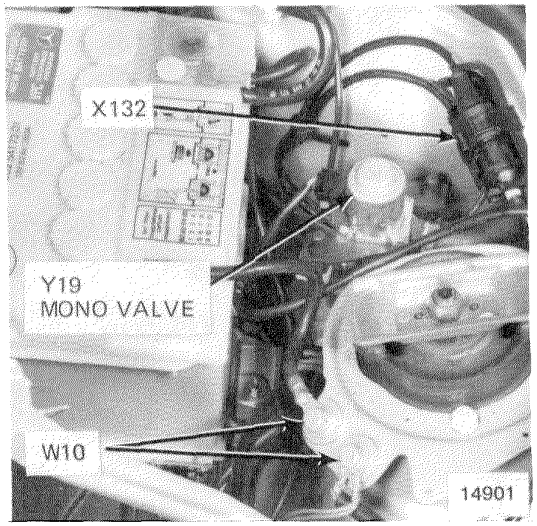

Figure 1

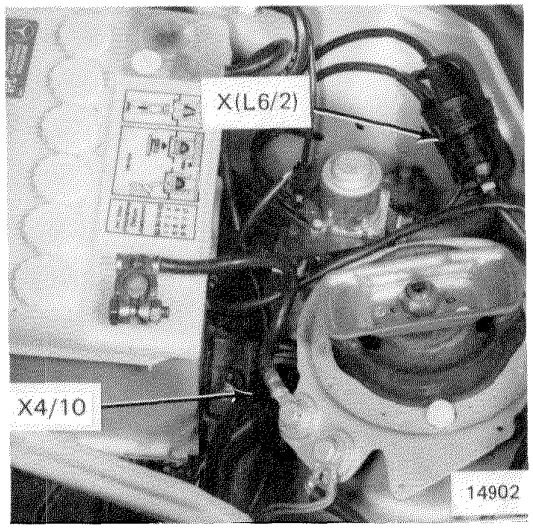

Figure 2

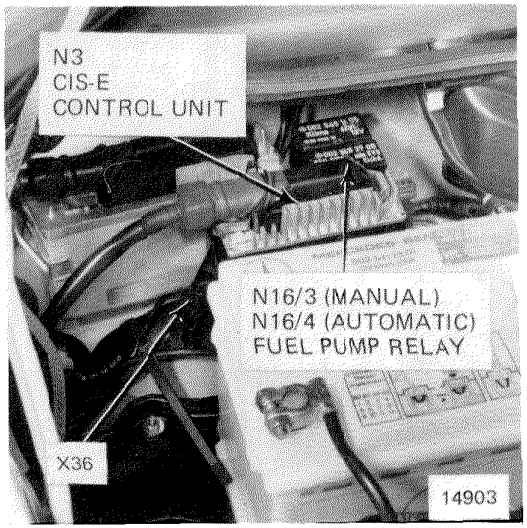

Figure 3

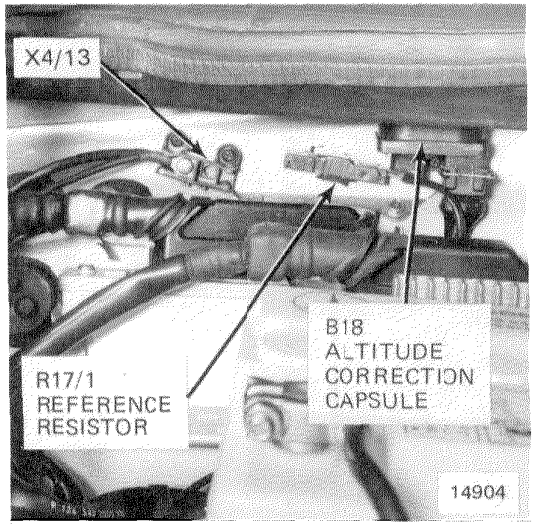

Figure 4

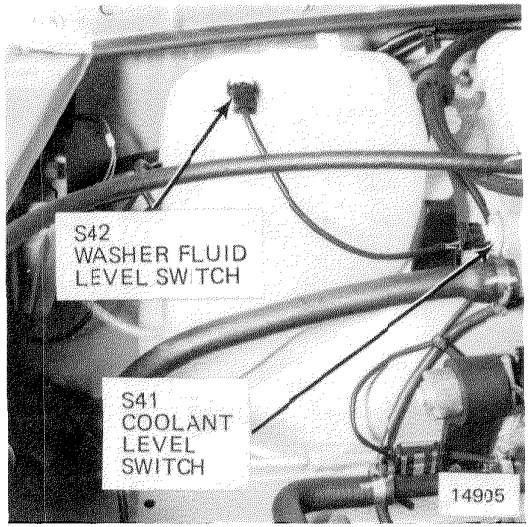

Figure 5

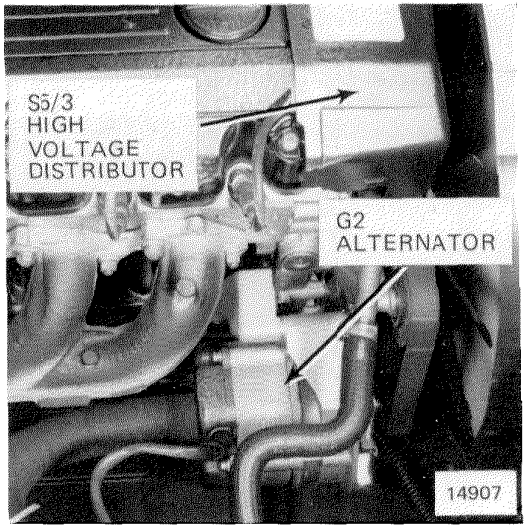

Figure 6

COMPONENT LOCATION

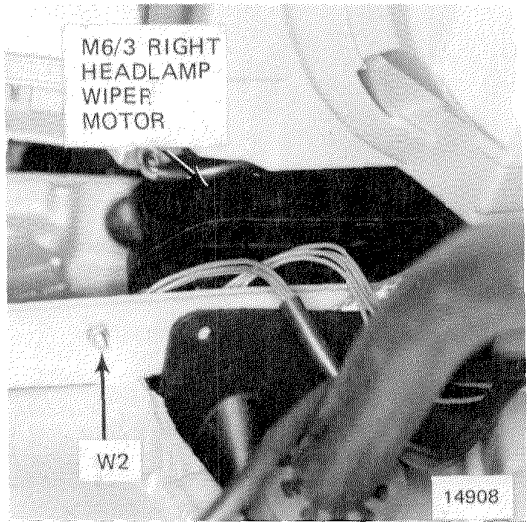

Figure 1

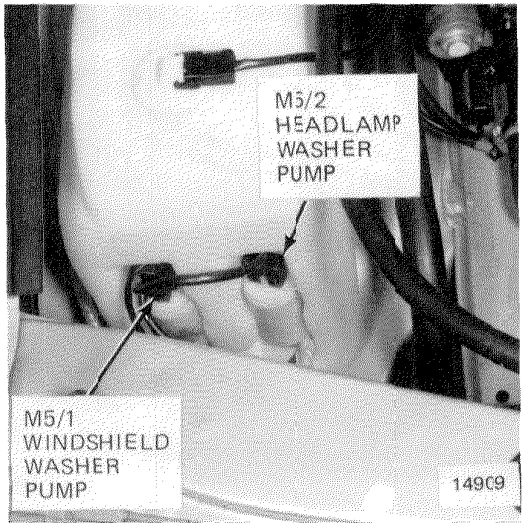

Figure 2

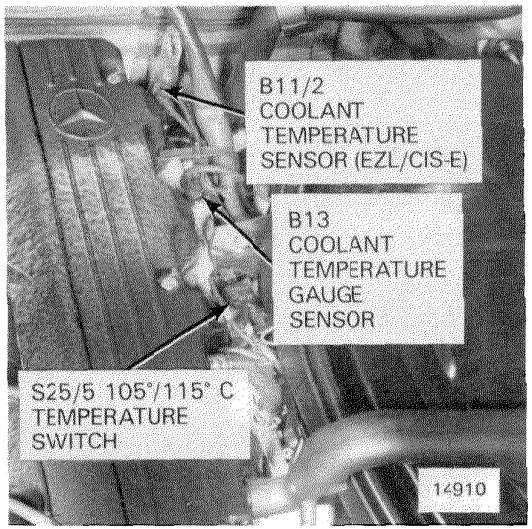

Figure 3

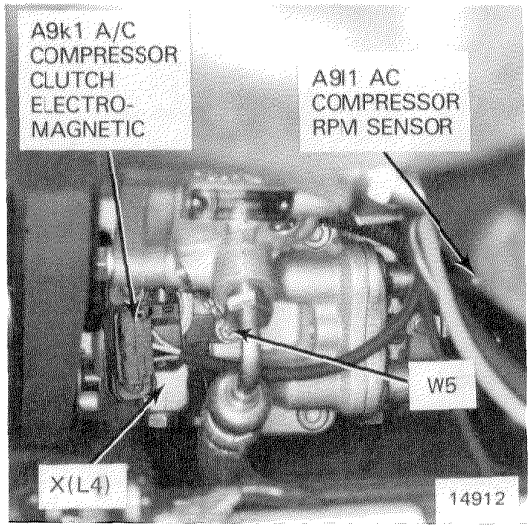

Figure 4

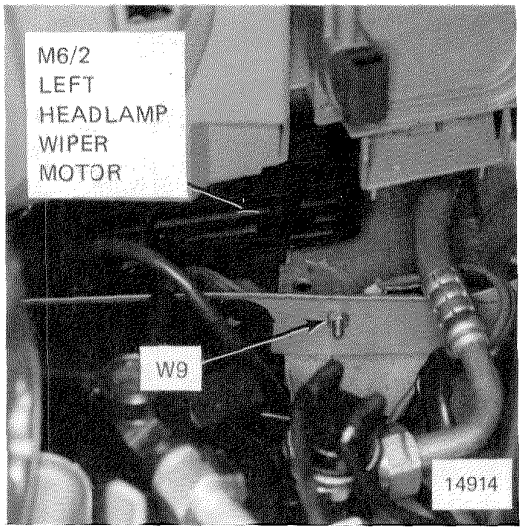

Figure 5

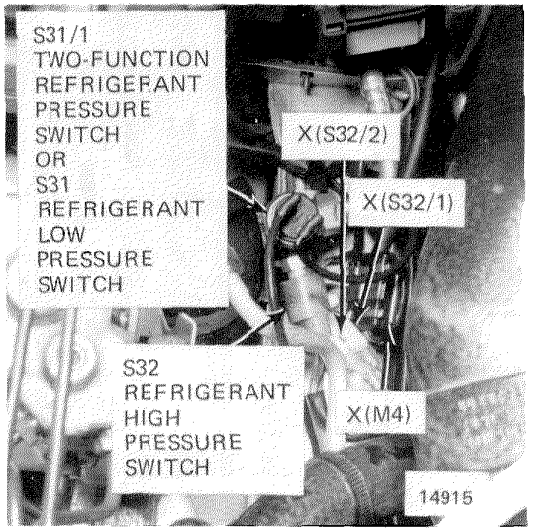

Figure 6

COMPONENT LOCATION

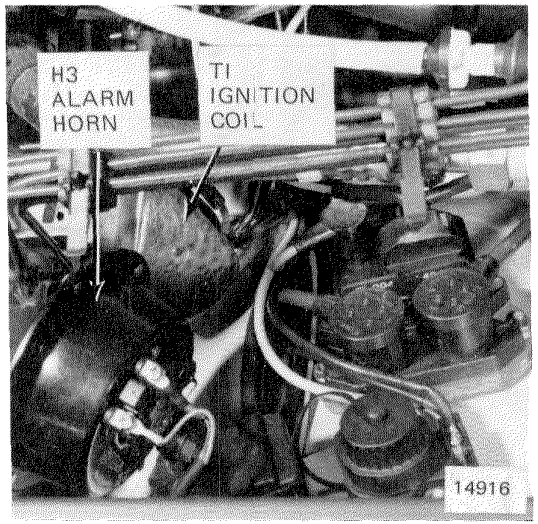

Figure 1

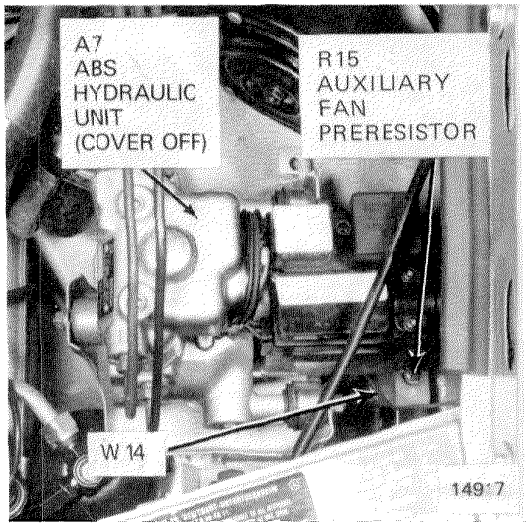

Figure 2

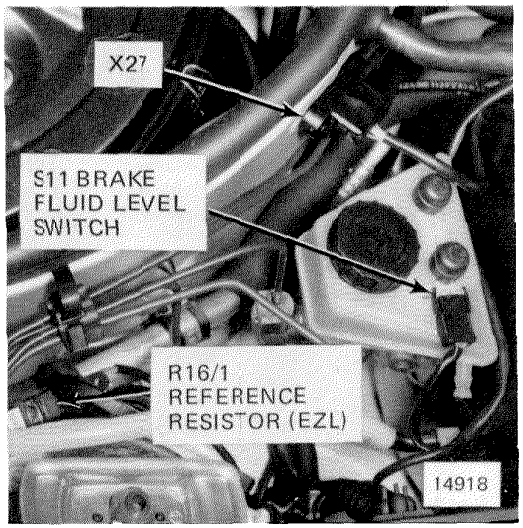

Figure 3

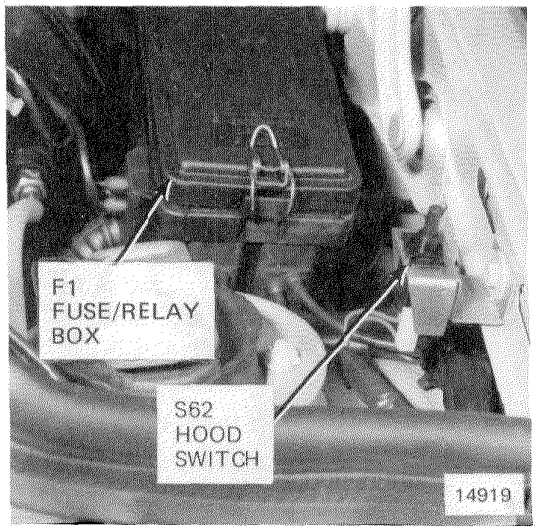

Figure 4

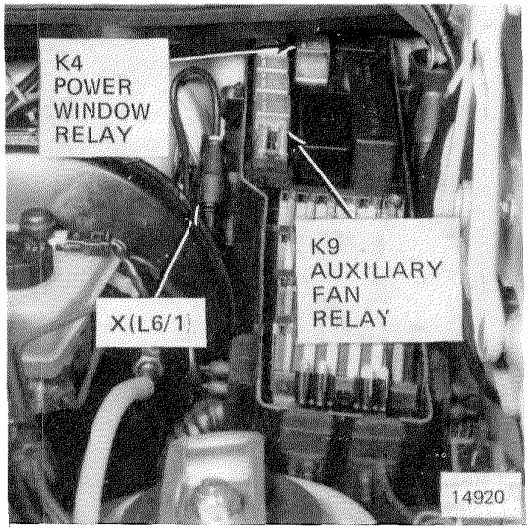

Figure 5

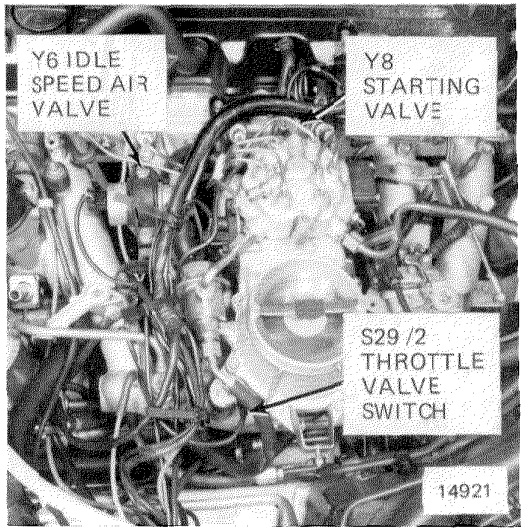

Figure 6

COMPONENT LOCATION

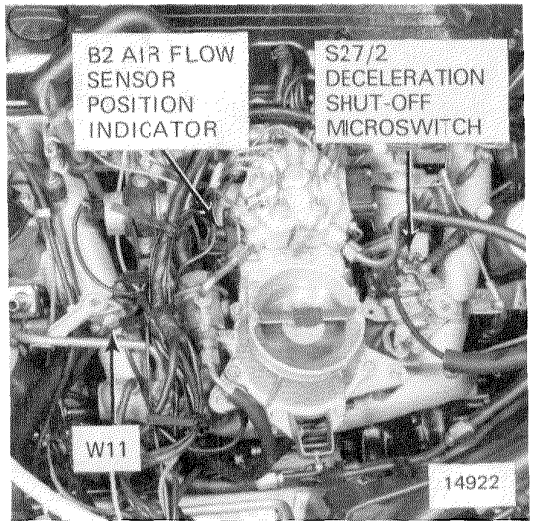

Figure 1

Figure 2

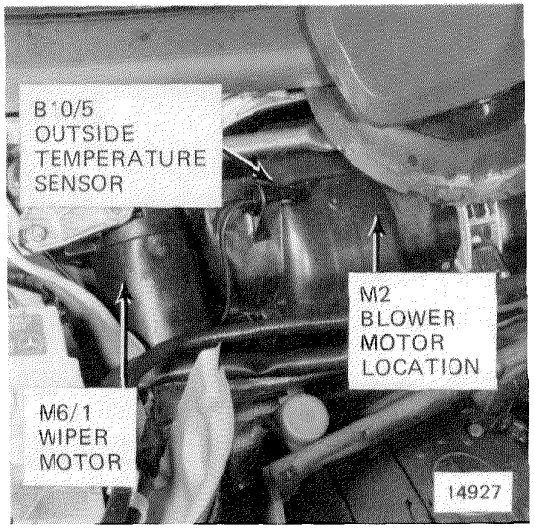

Figure 3

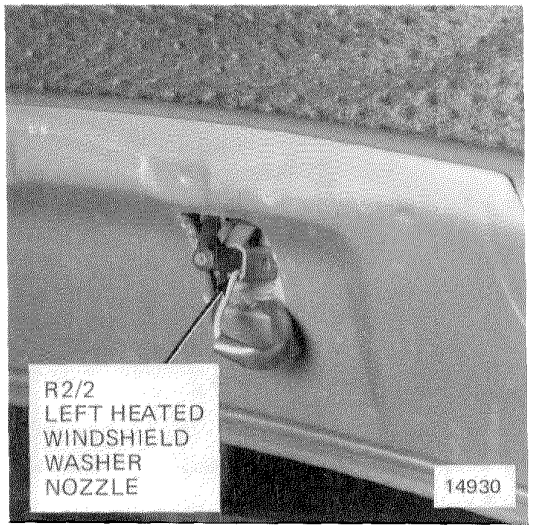

Figure 4

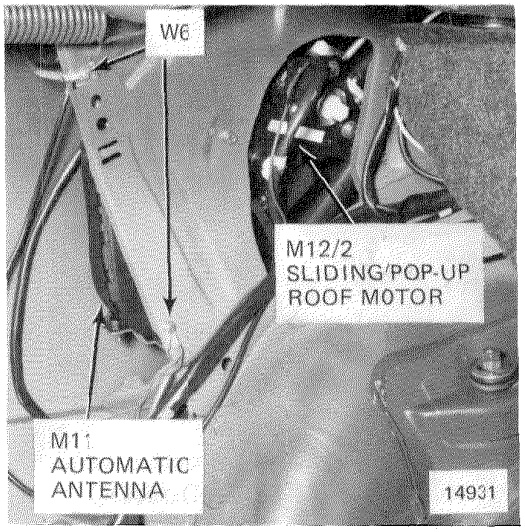

Figure 5

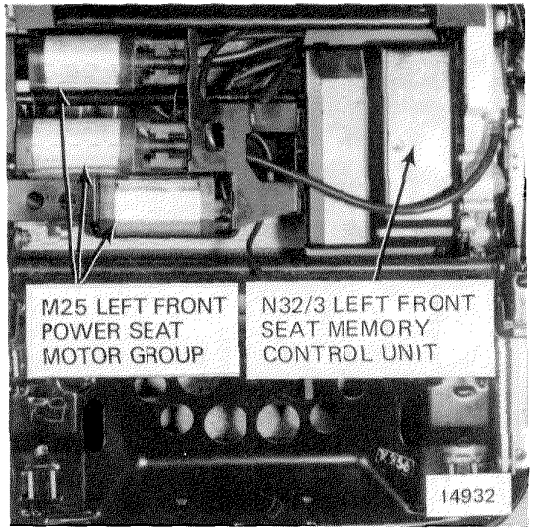

Figure 6

COMPONENT LOCATION

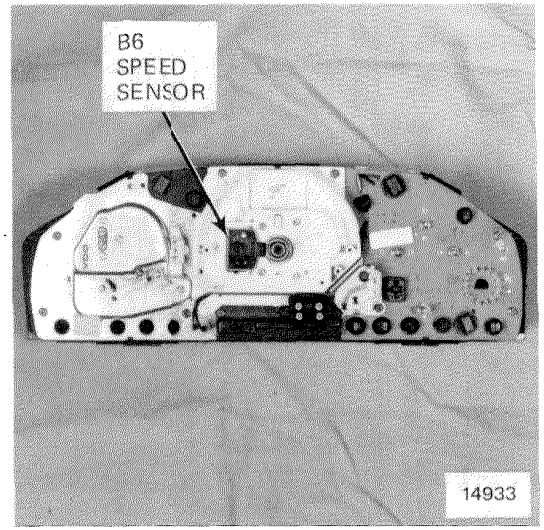

Figure 1

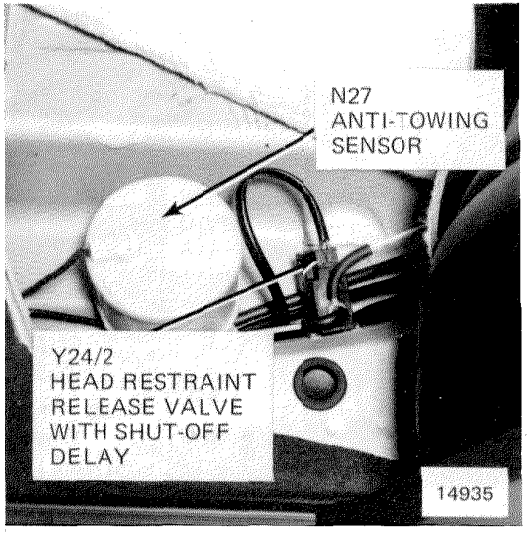

Figure 2

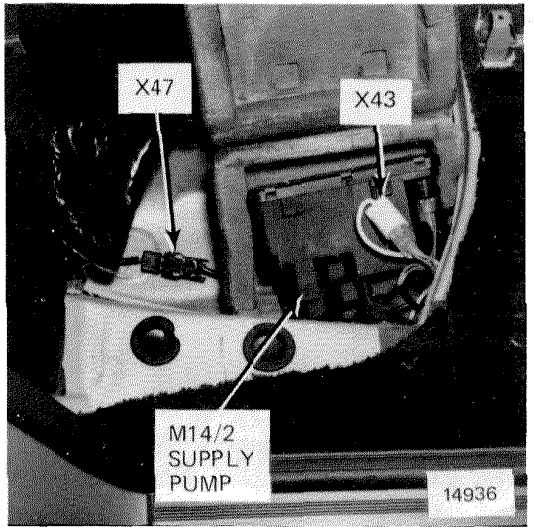

Figure 3

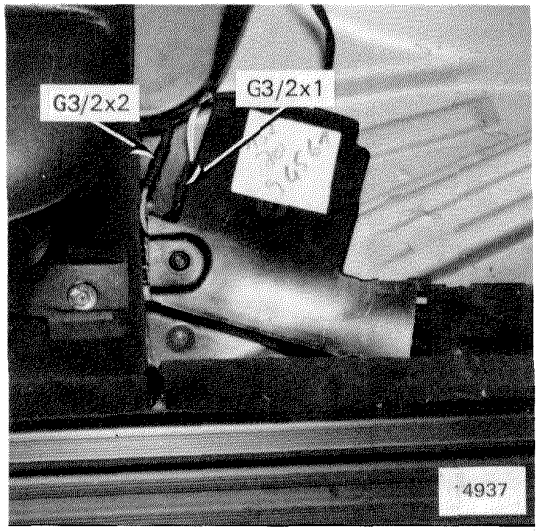

Figure 4

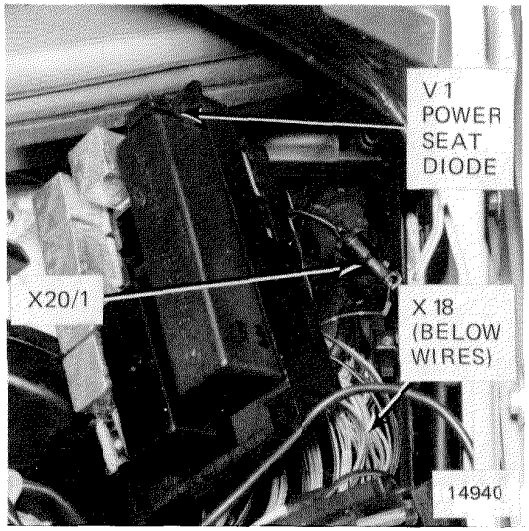

Figure 5

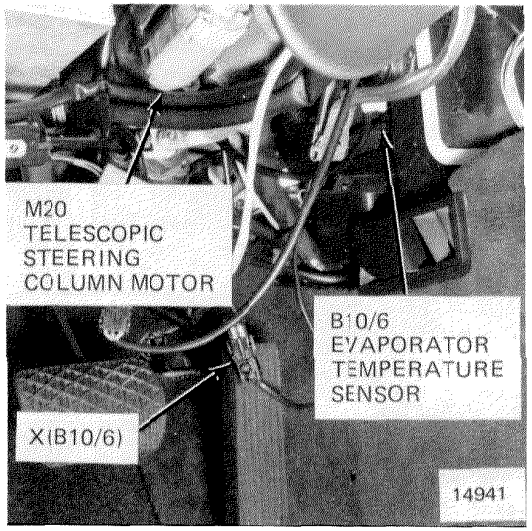

Figure 6

COMPONENT LOCATION

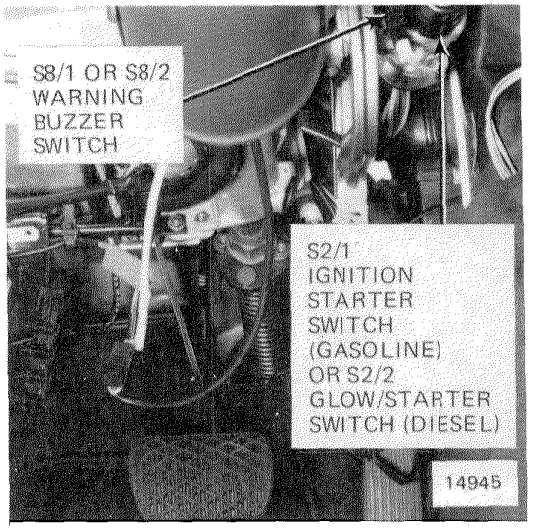

Figure 1

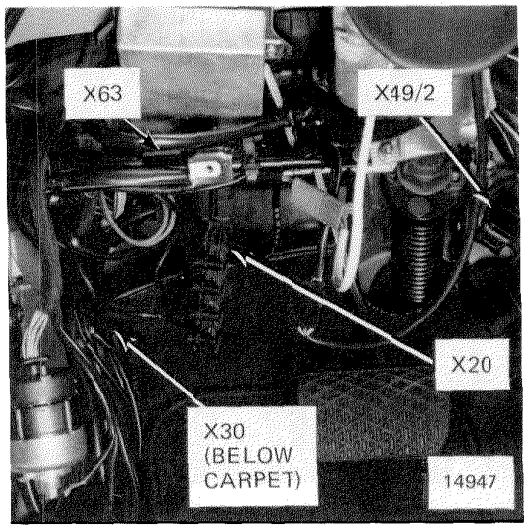

Figure 2

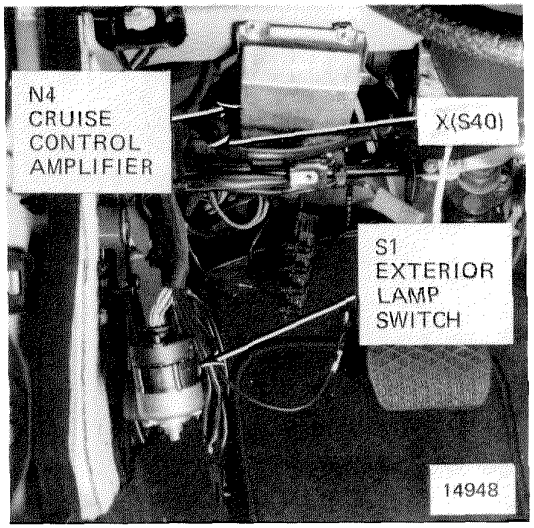

Figure 3

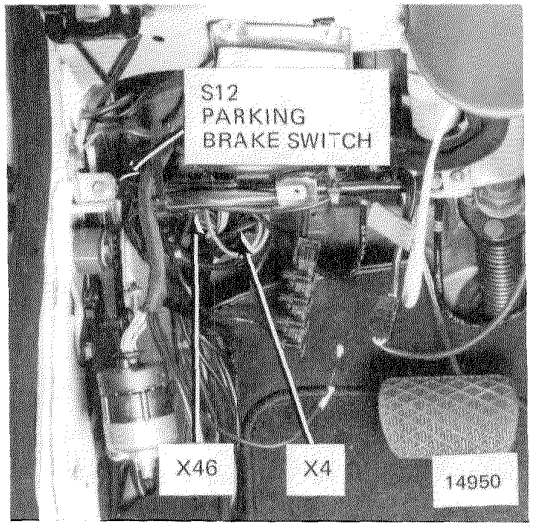

Figure 4

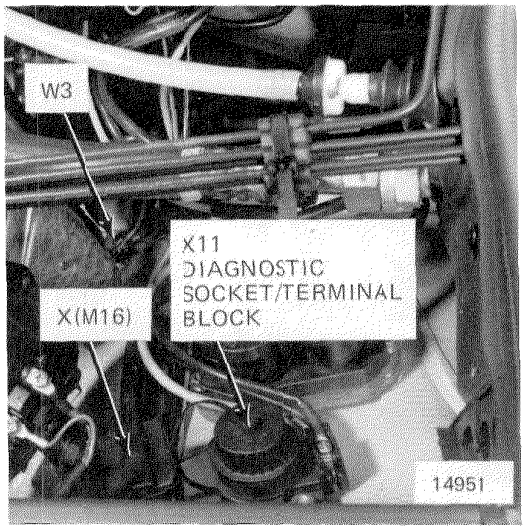

Figure 5

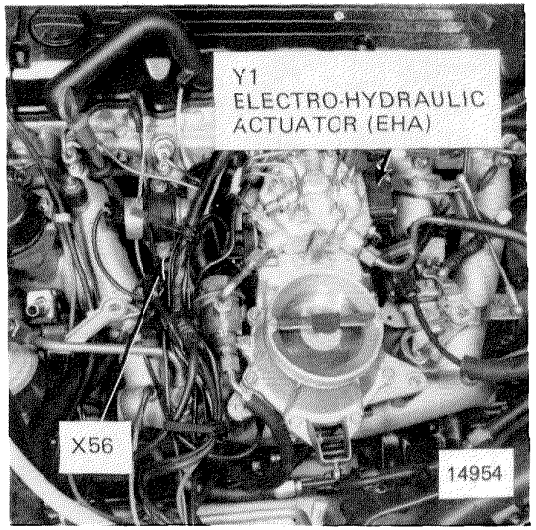

Figure 6

COMPONENT LOCATION

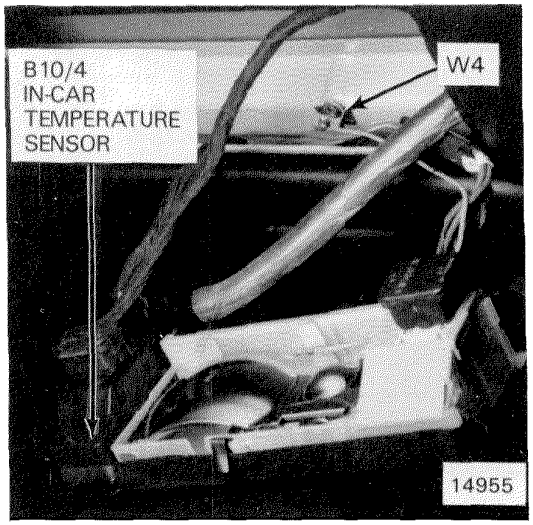

Figure 1

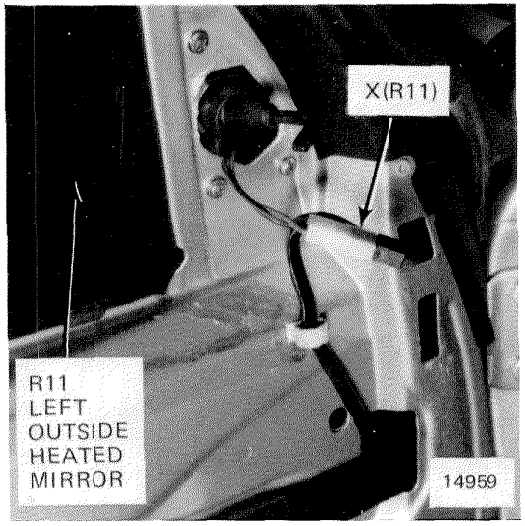

Figure 2

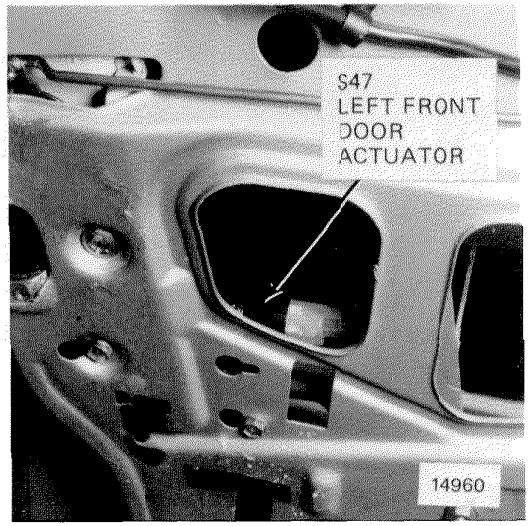

Figure 3

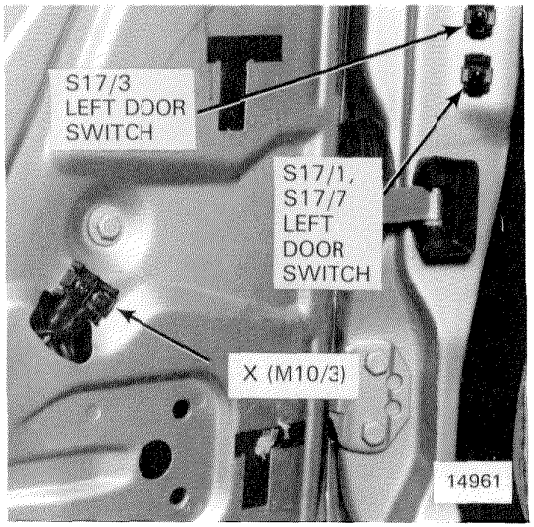

Figure 4

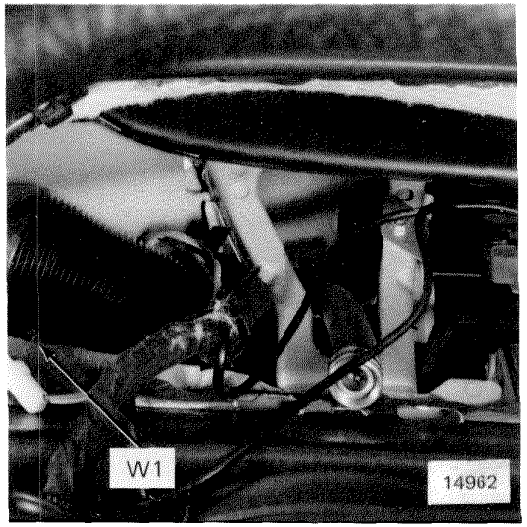

Figure 5

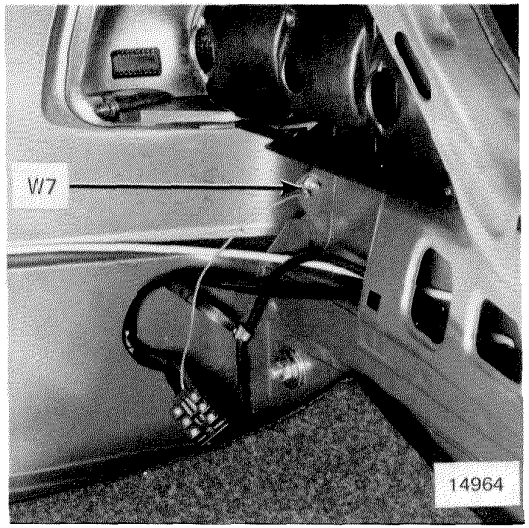

Figure 6

COMPONENT LOCATION

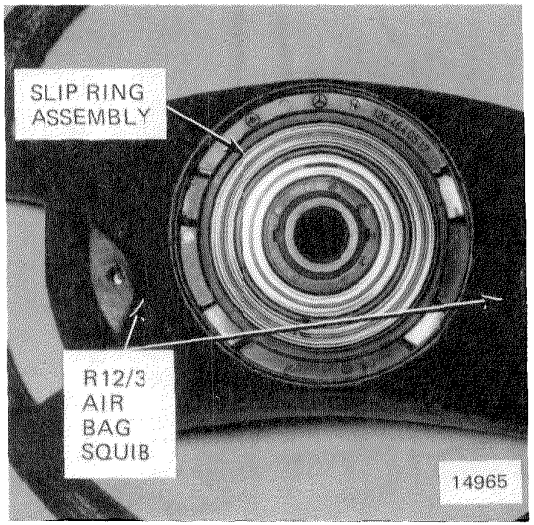

Figure 1

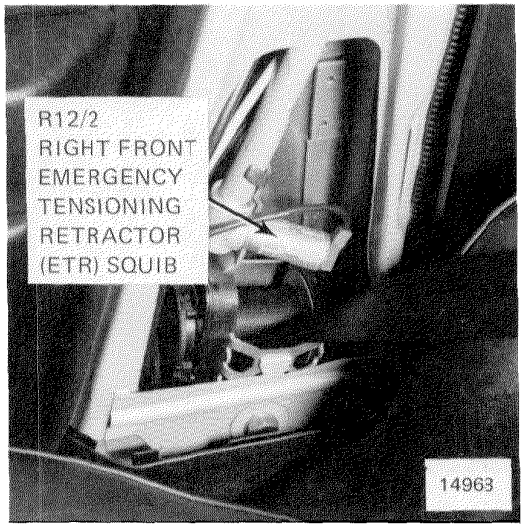

Figure 2

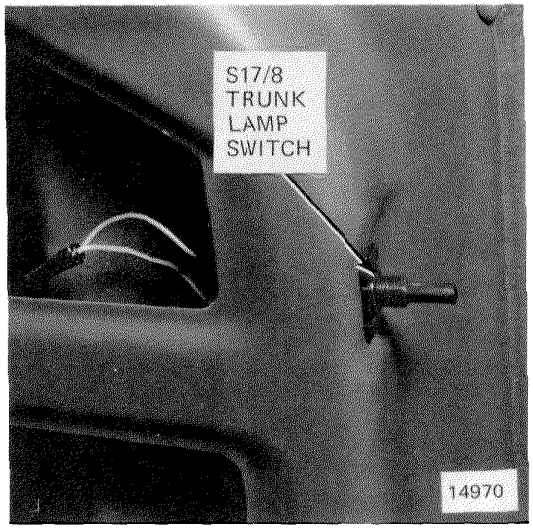

Figure 3

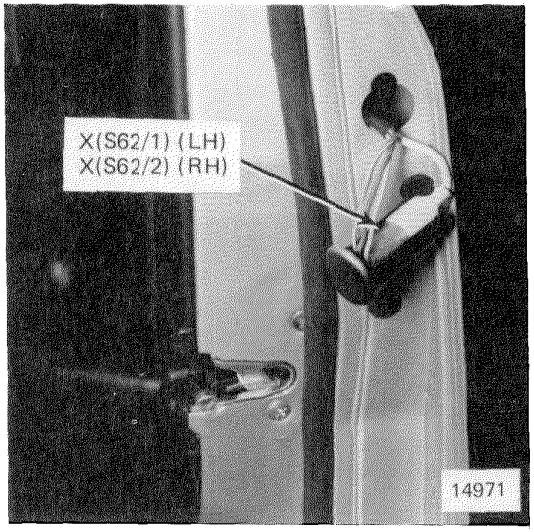

Figure 4

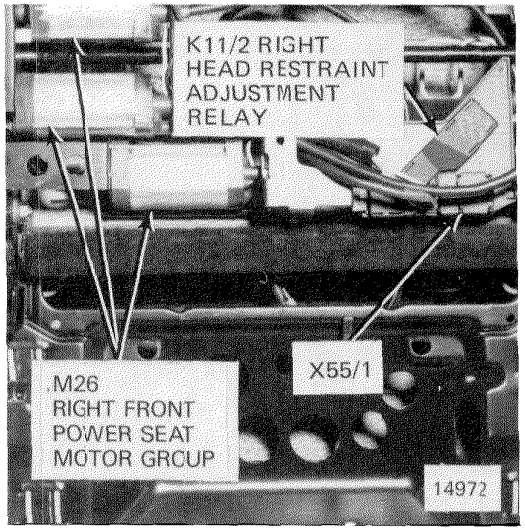

Figure 5

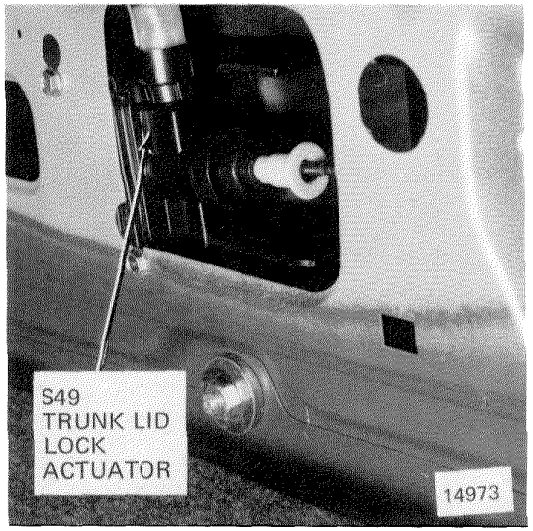

Figure 6

COMPONENT LOCATION

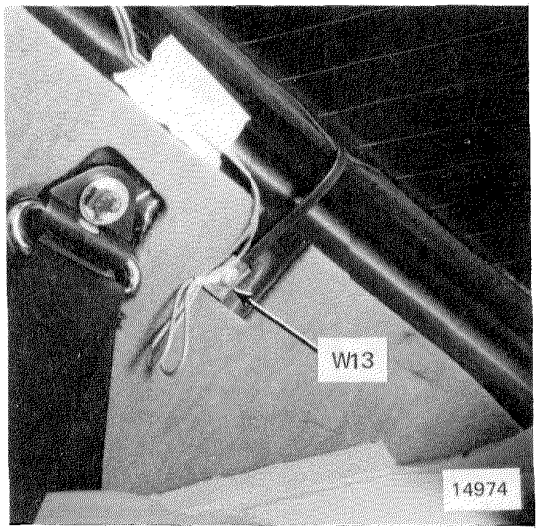

Figure 1

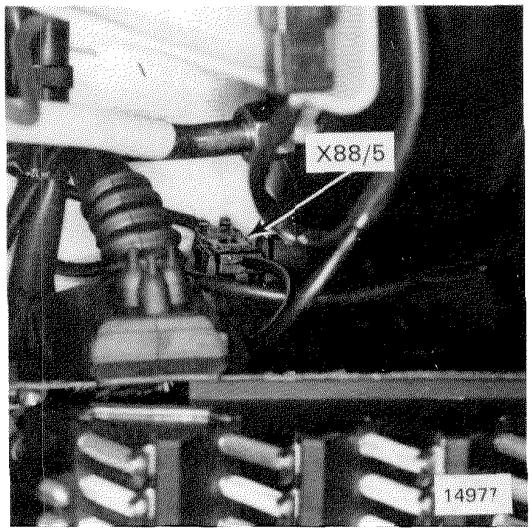

Figure 2

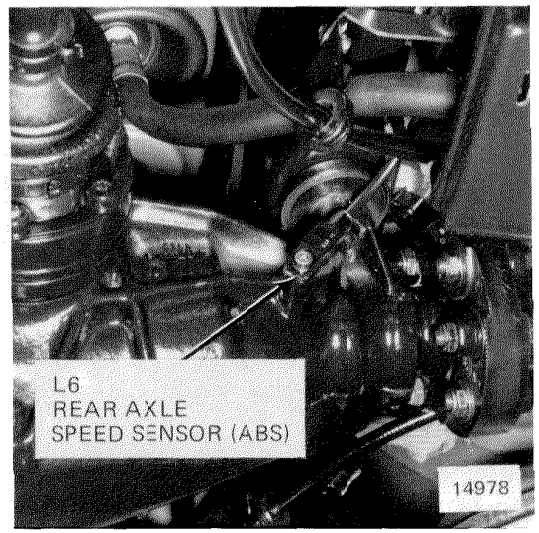

Figure 3

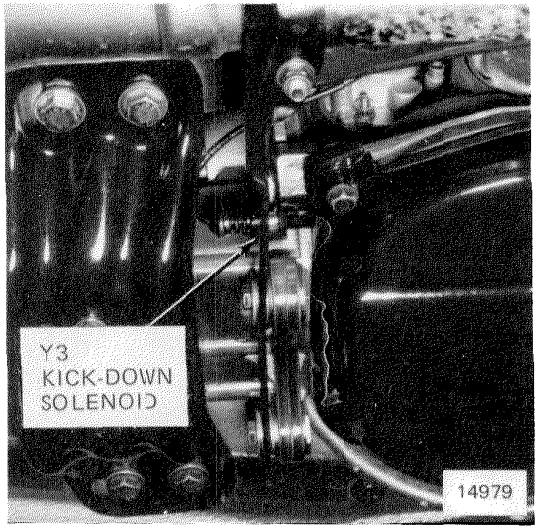

Figure 4

Figure 5

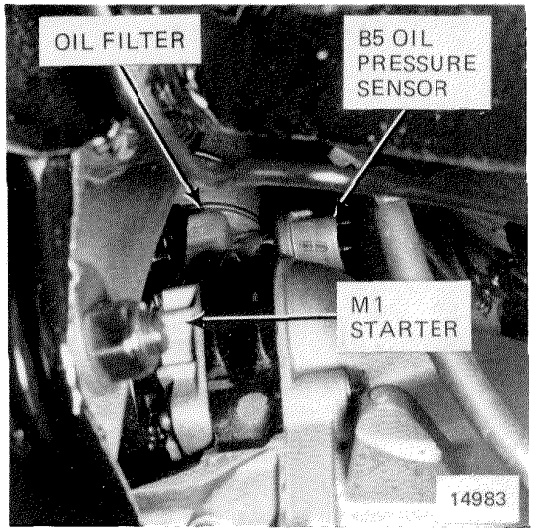

Figure 6

COMPONENT LOCATION

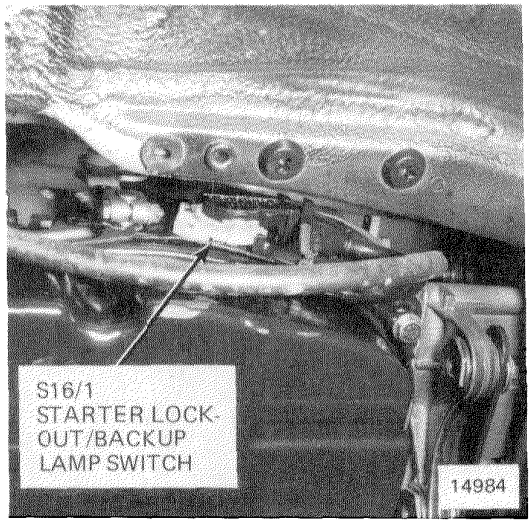

Figure 1

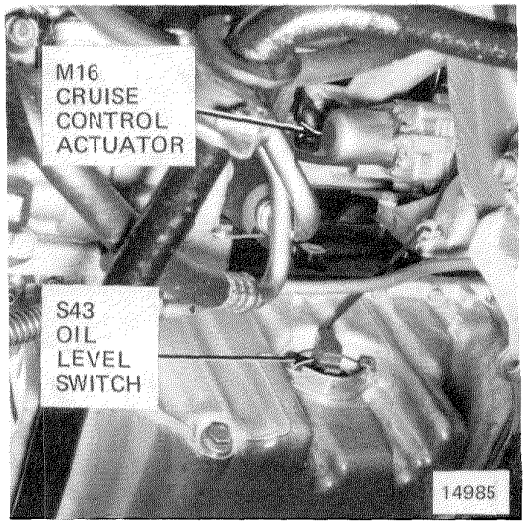

Figure 2

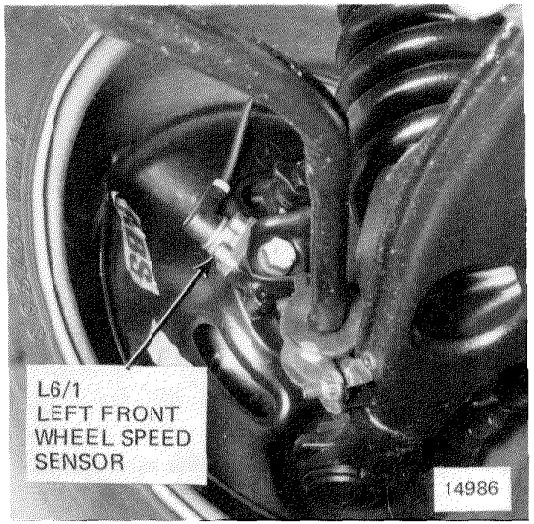

Figure 3

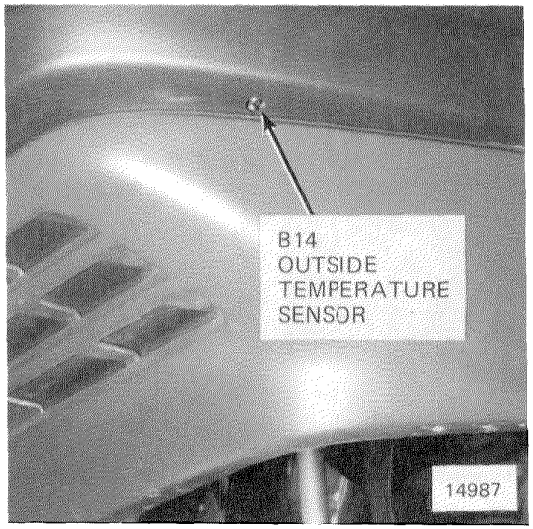

Figure 4

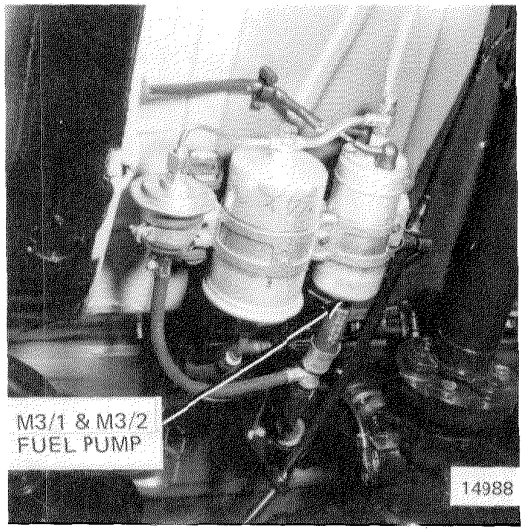

Figure 5

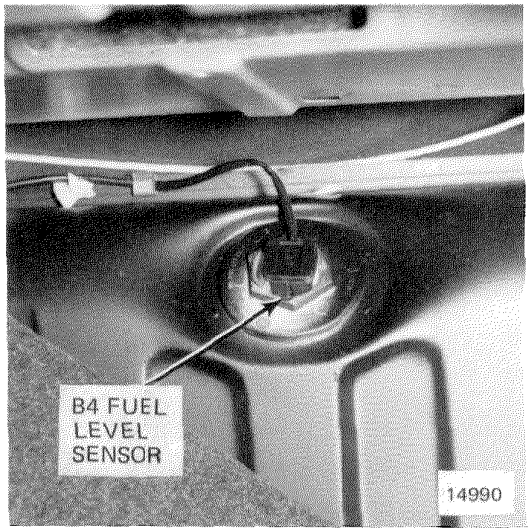

Figure 6

COMPONENT LOCATION

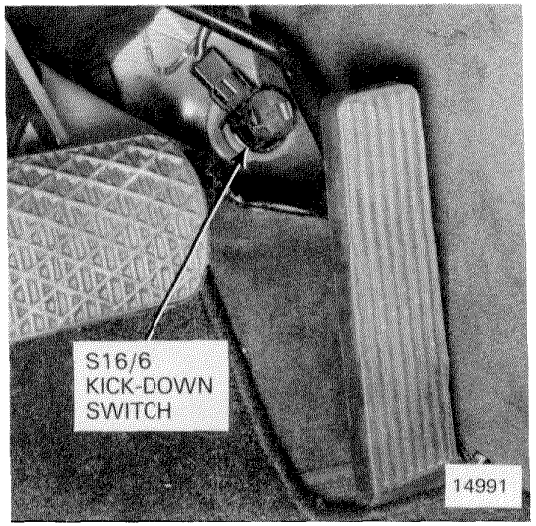

Figure 1

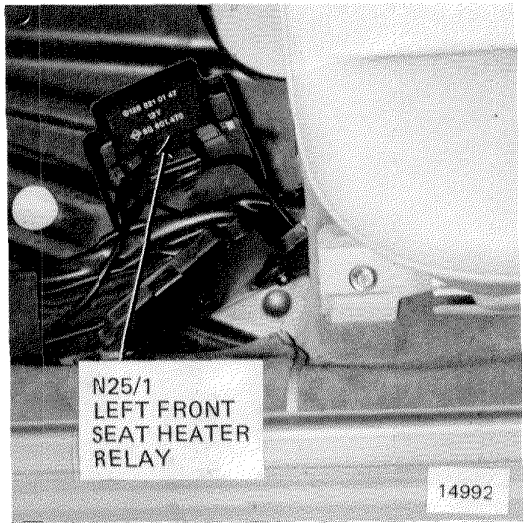

Figure 2

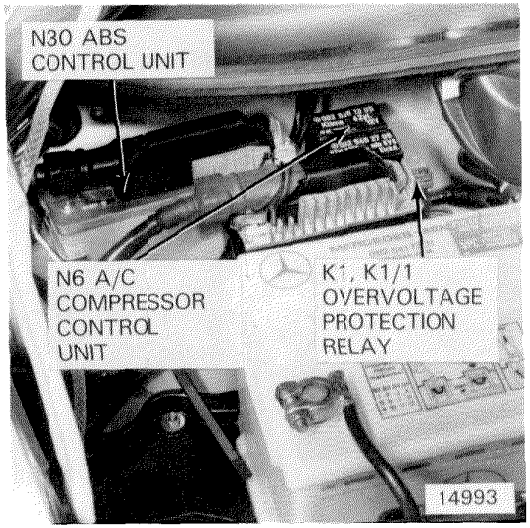

Figure 3

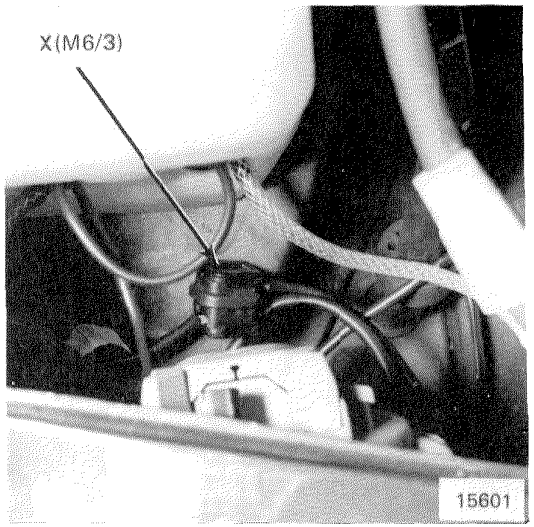

Figure 4

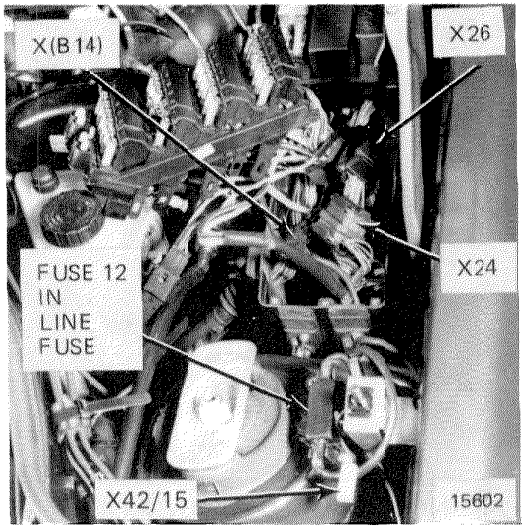

Figure 5

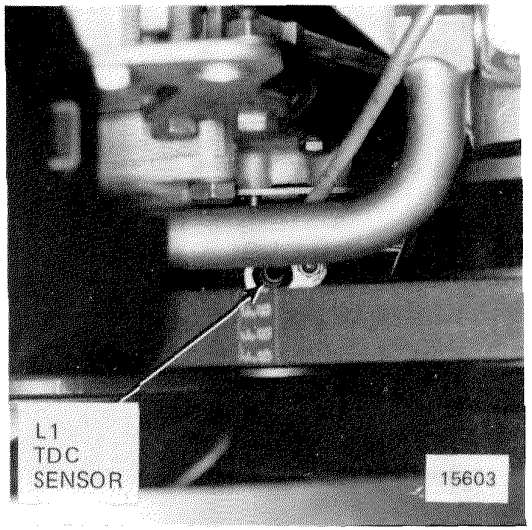

Figure 6

COMPONENT LOCATION

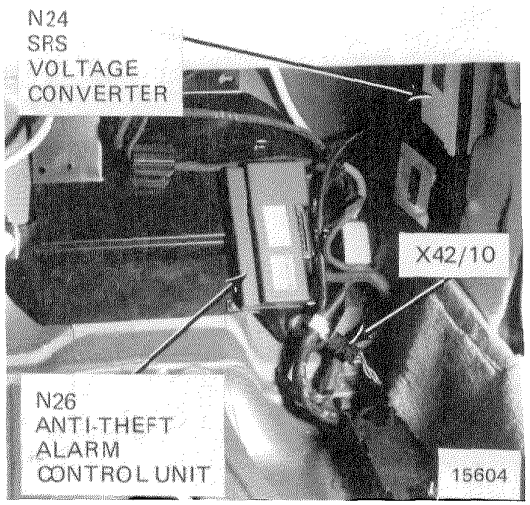

Figure 1

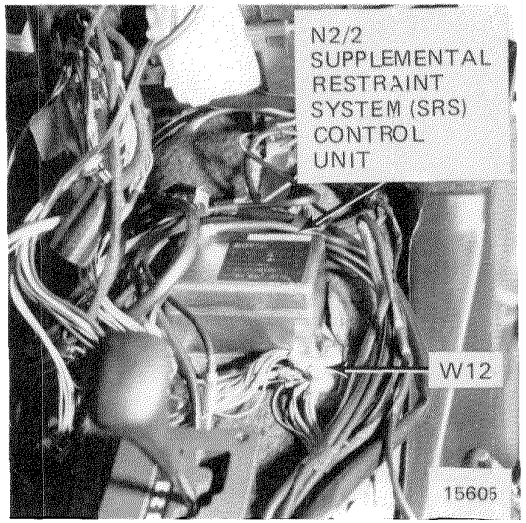

Figure 2

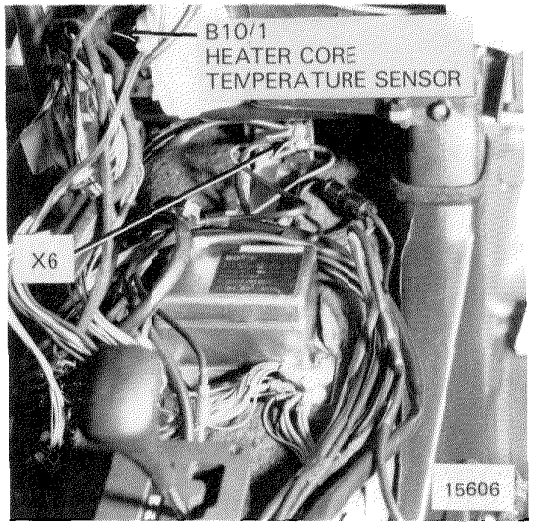

Figure 3

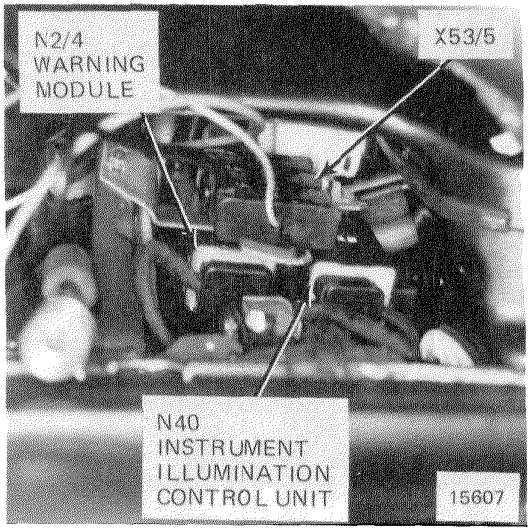

Figure 4

Figure 5

Figure 6

COMPONENT LOCATION

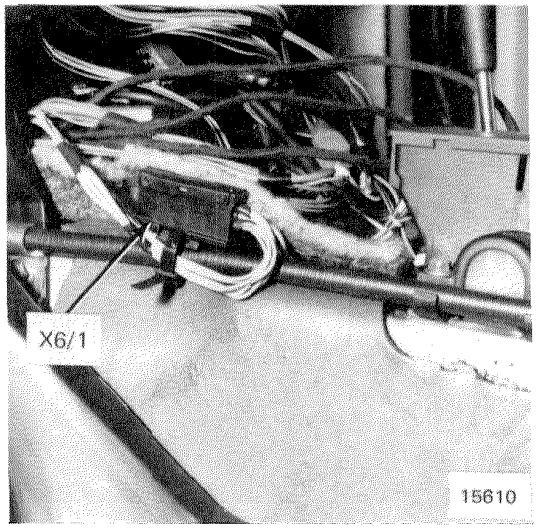

Figure 1

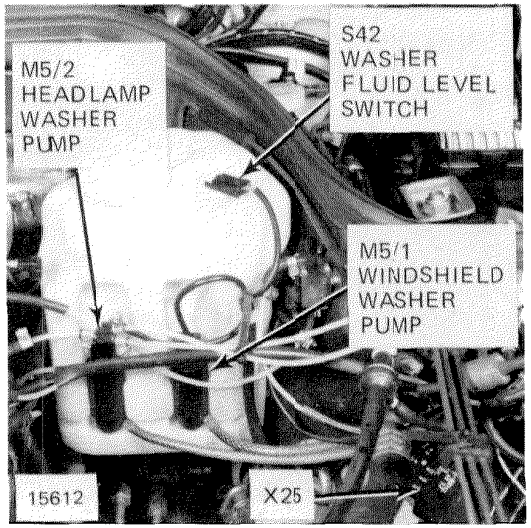

Figure 2

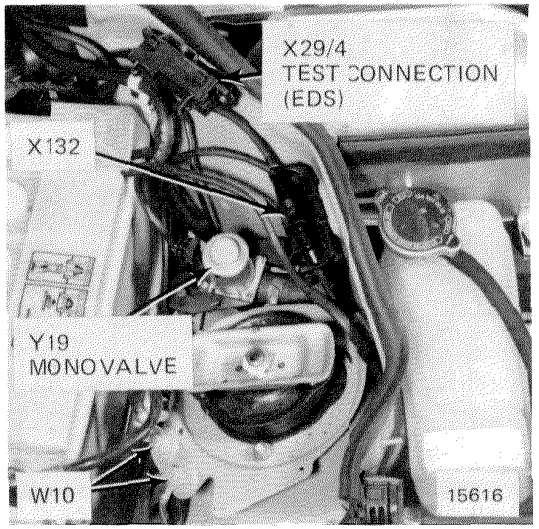

Figure 3

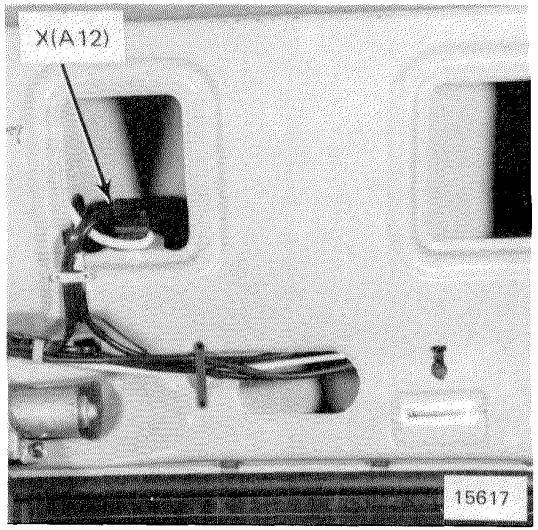

Figure 4

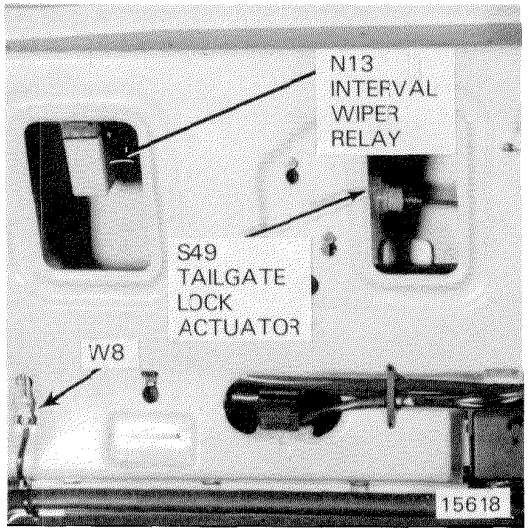

Figure 5

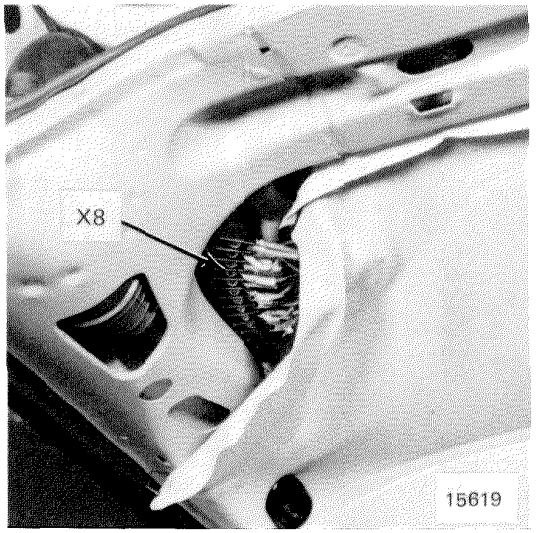

Figure 6

COMPONENT LOCATION

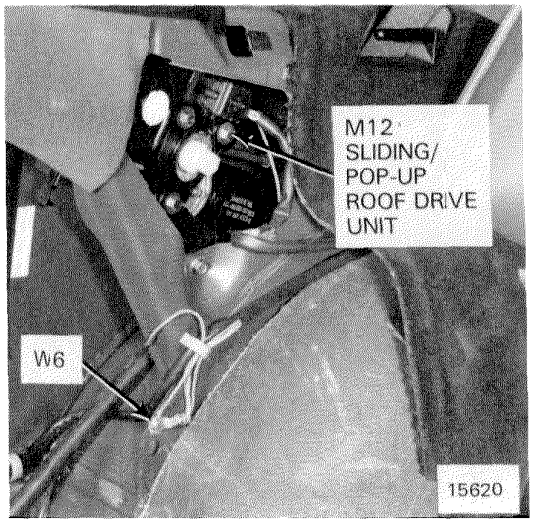

Figure 1

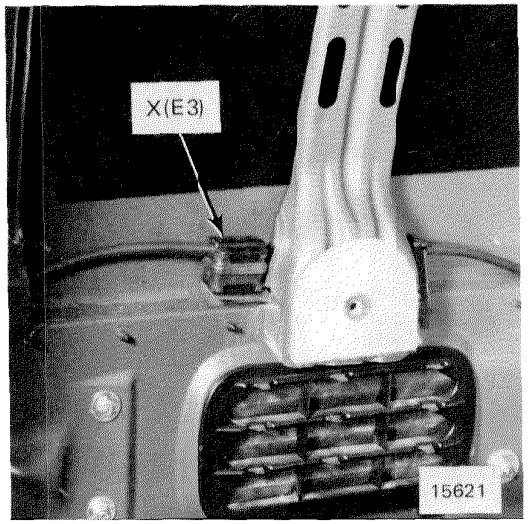

Figure 2

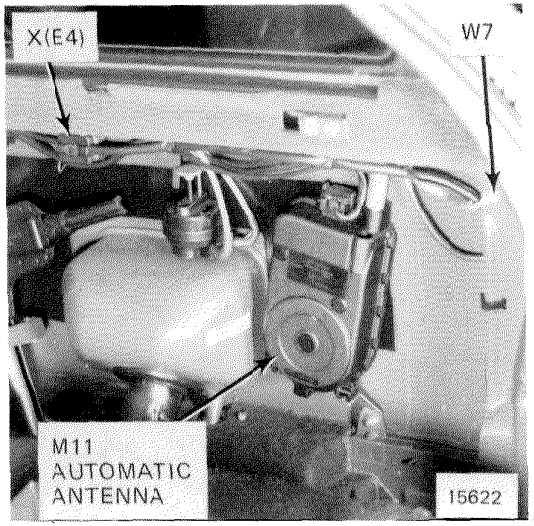

Figure 3

Figure 4

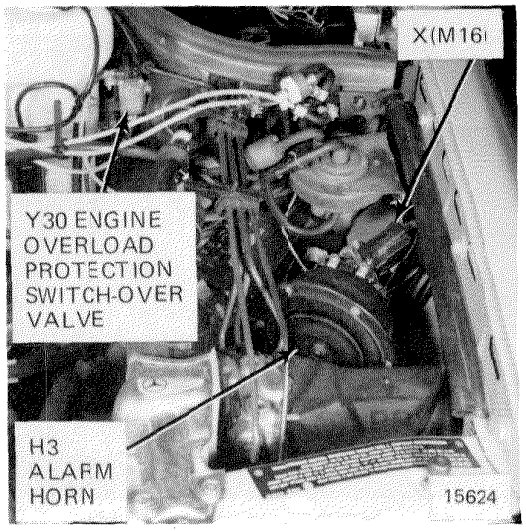

Figure 5

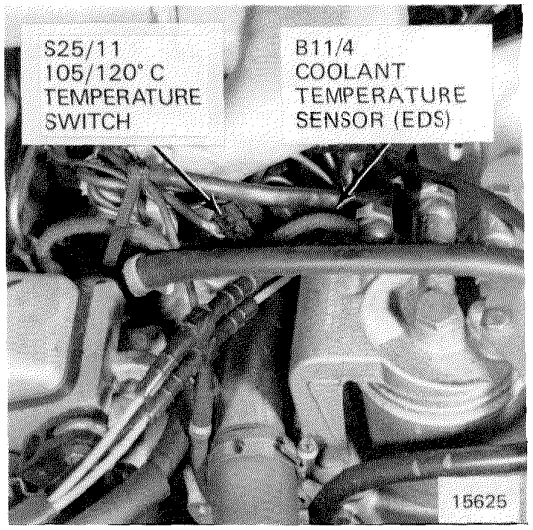

Figure 6

COMPONENT LOCATION

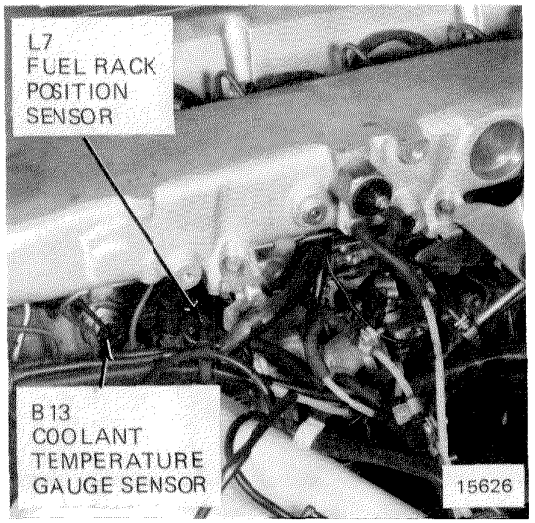

Figure 1

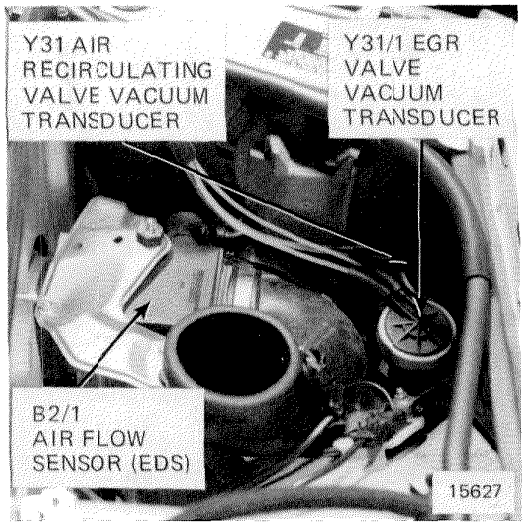

Figure 2

Figure 3

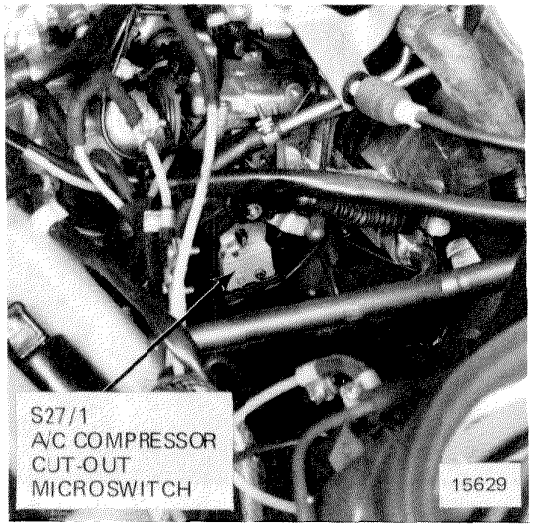

Figure 4

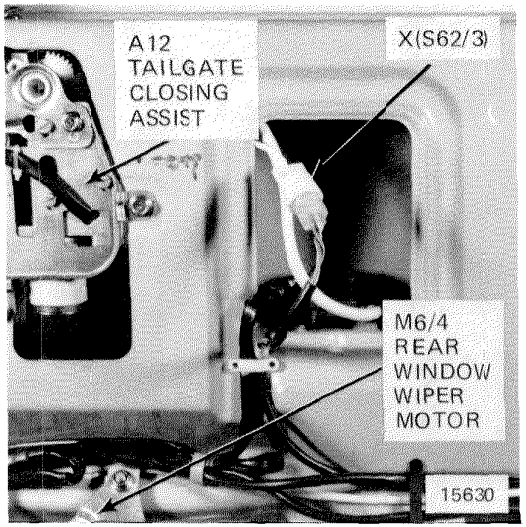

Figure 5

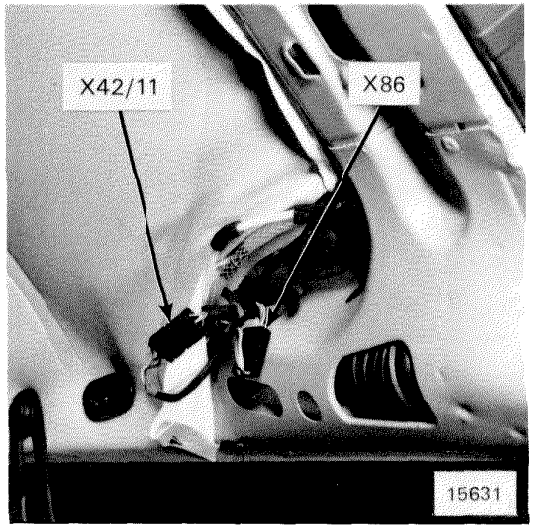

Figure 6

COMPONENT LOCATION

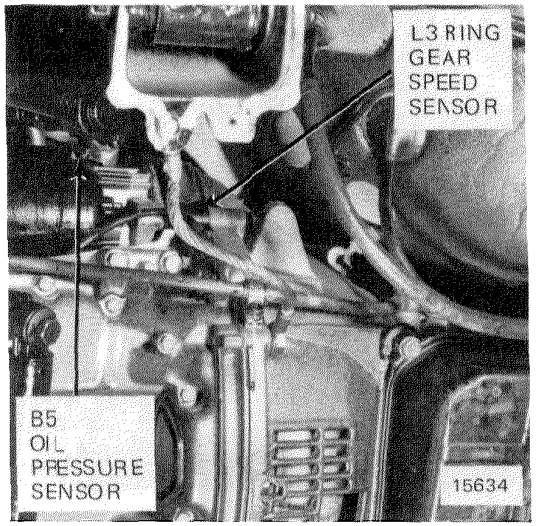

Figure 1

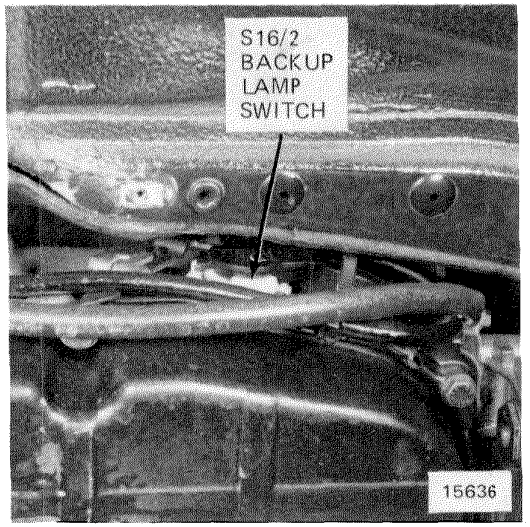

Figure 2

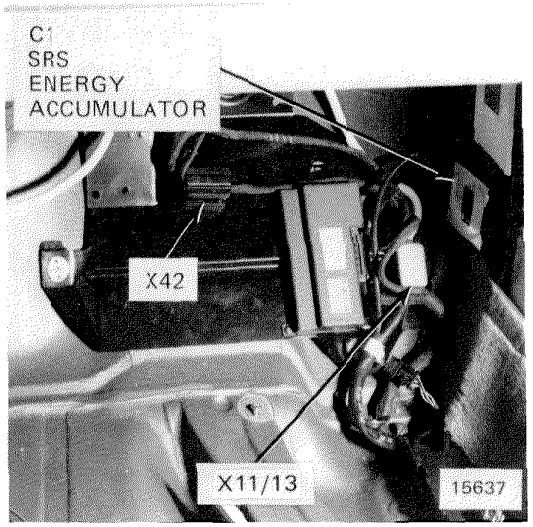

Figure 3

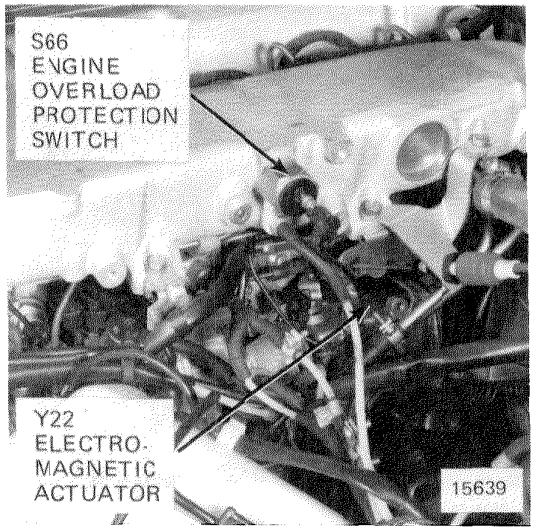

Figure 4

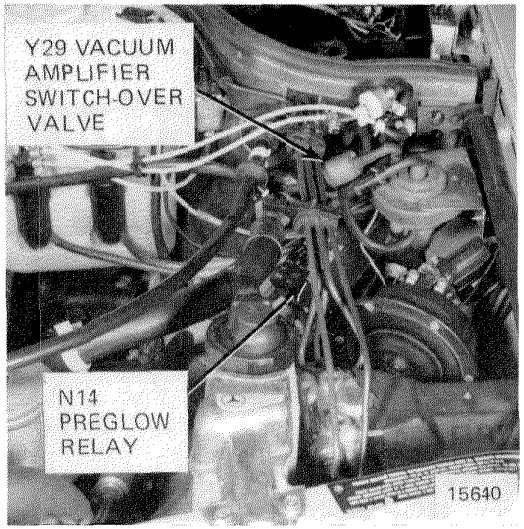

Figure 5

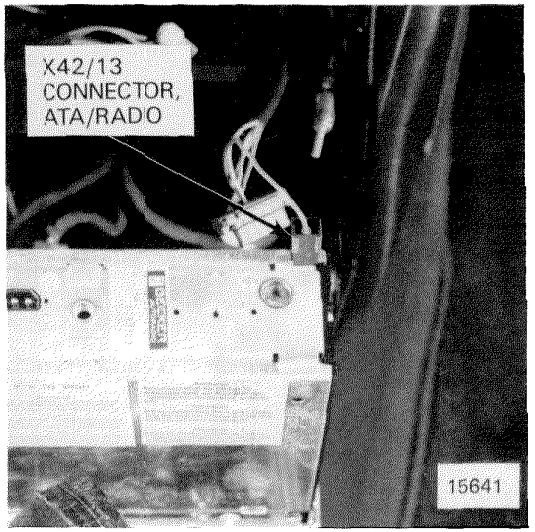

Figure 6

COMPONENT LOCATION

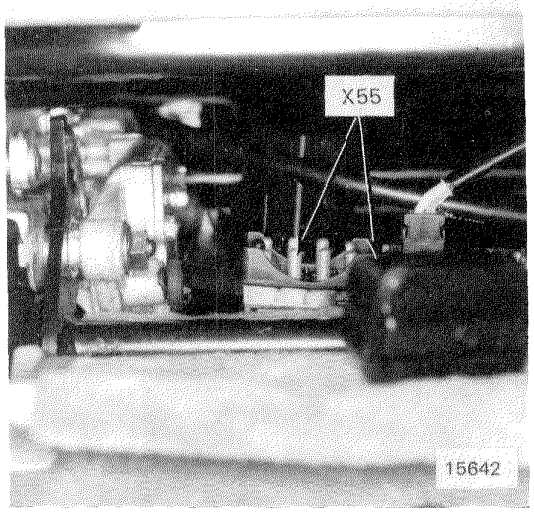

Figure 1

Figure 2

Figure 3

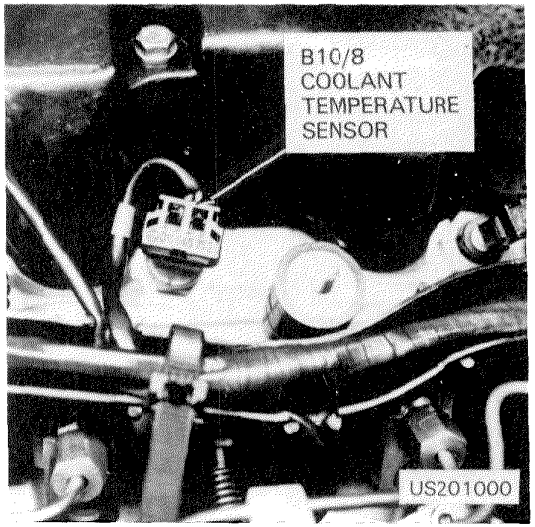

Figure 4

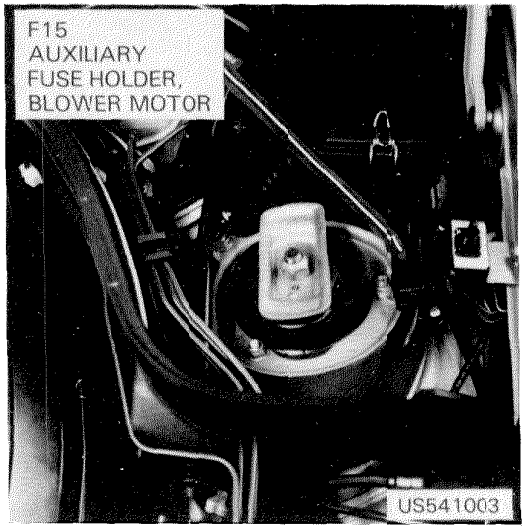

Figure 5

Figure 6

COMPONENT LOCATION

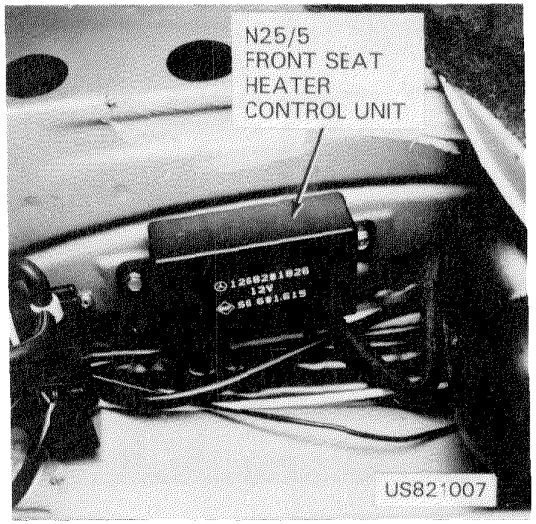

Figure 1

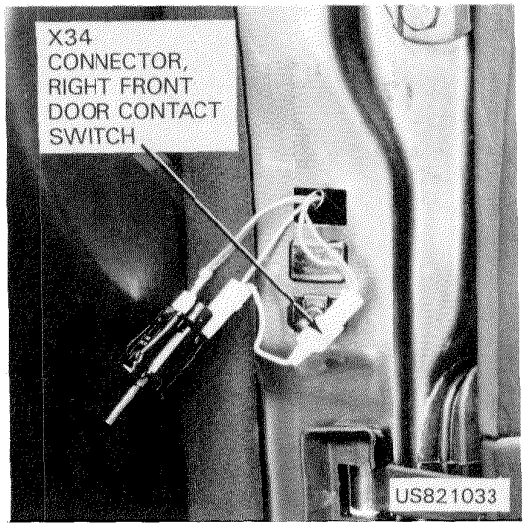

Figure 2

Figure 3

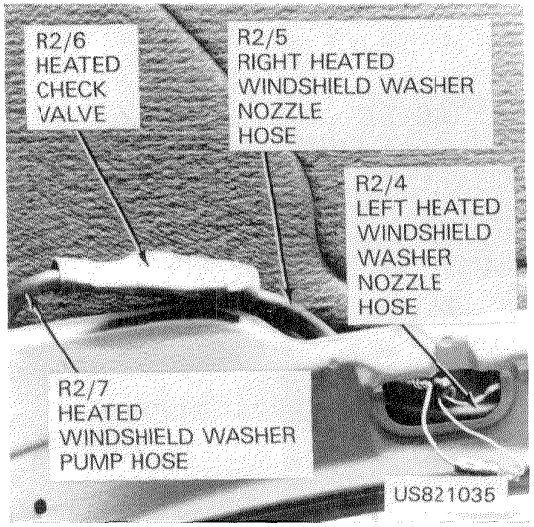

Figure 4

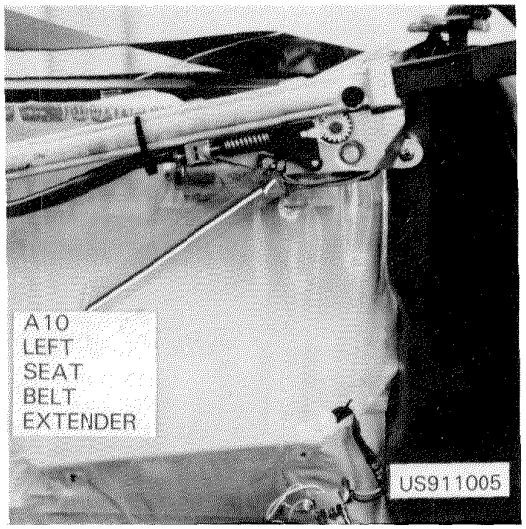

Figure 5

Figure 6

COMPONENT LOCATION

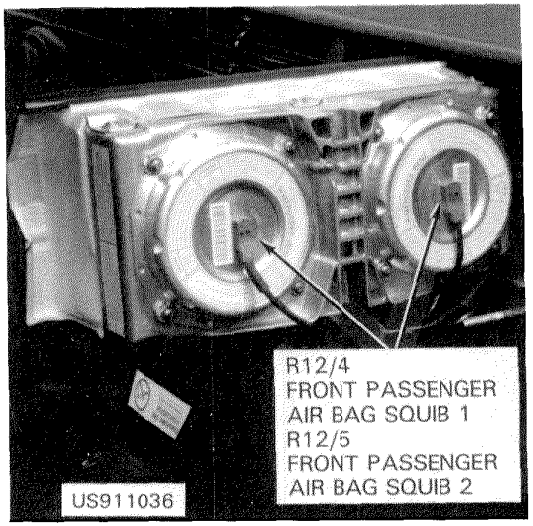

Figure 1

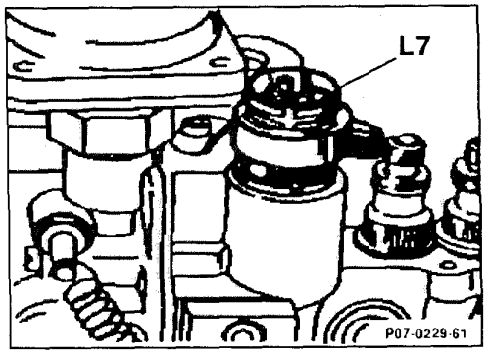

Figure 2

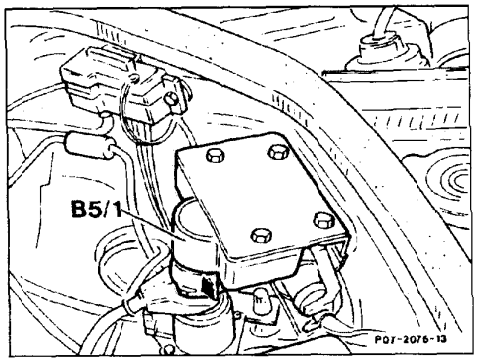

Figure 3

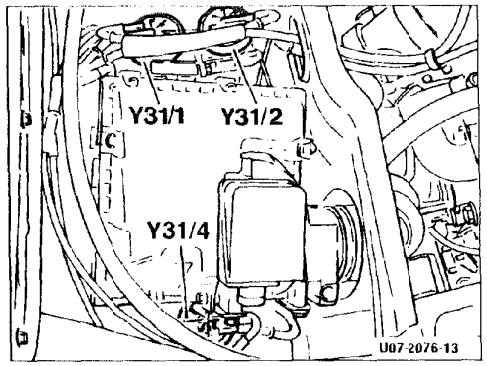

Figure 4

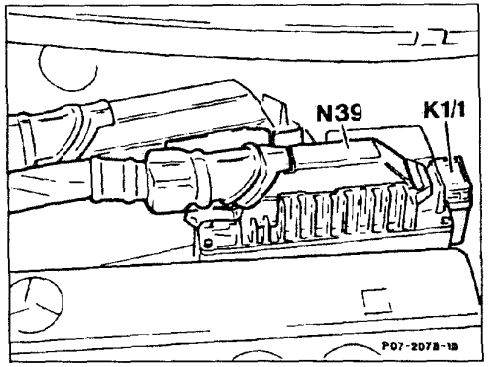

Figure 5

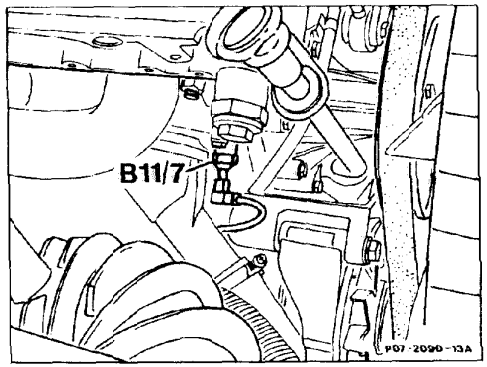

Figure 6

COMPONENT LOCATION

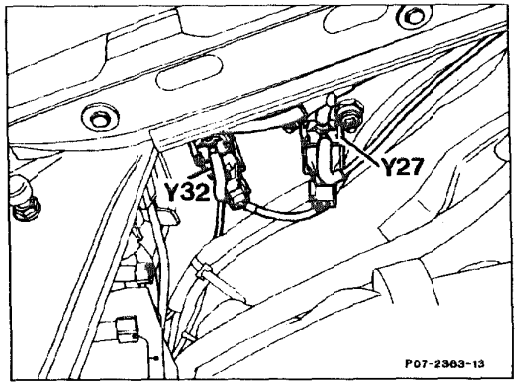

Figure 1

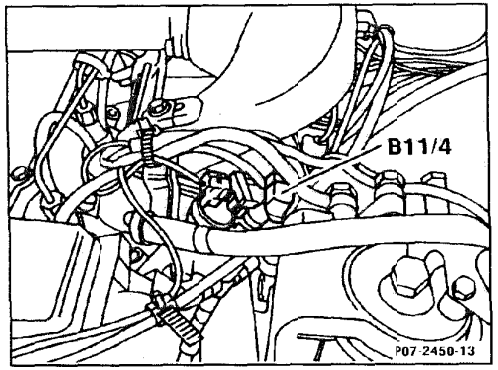

Figure 2

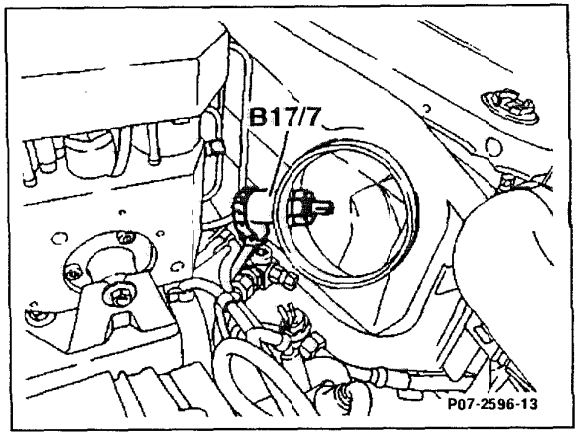

Figure 3

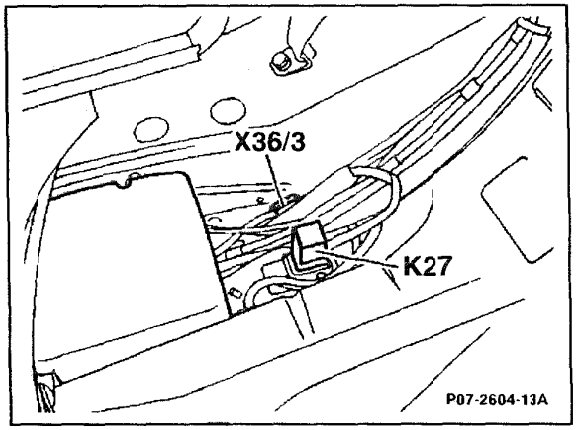

Figure 4

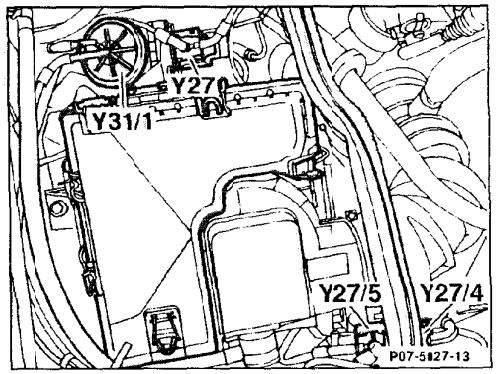

Figure 5

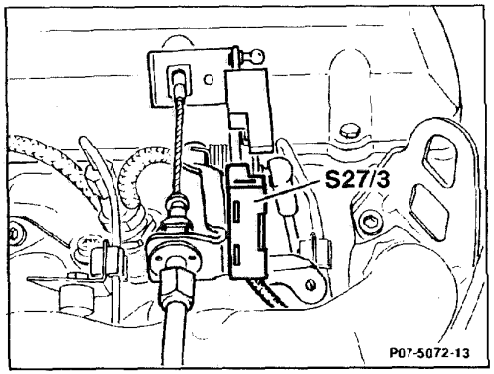

Figure 6

COMPONENT LOCATION

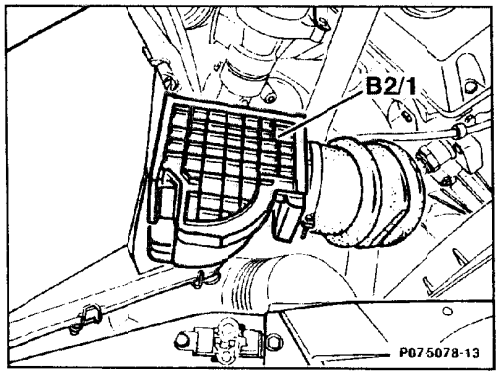

Figure 1

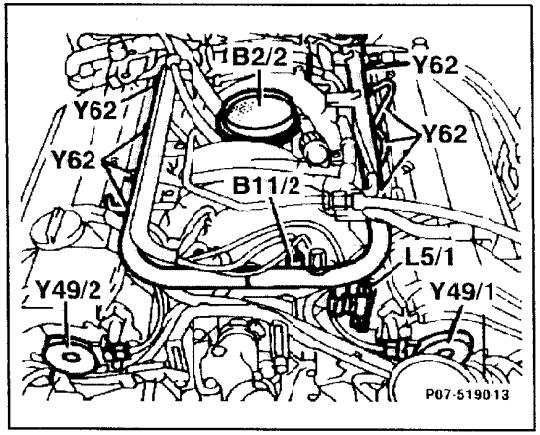

Figure 2

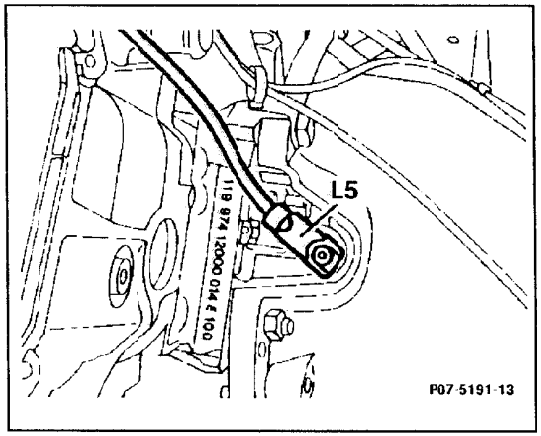

Figure 3

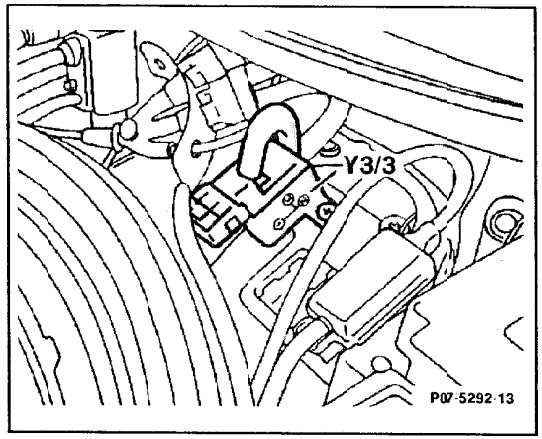

Figure 4

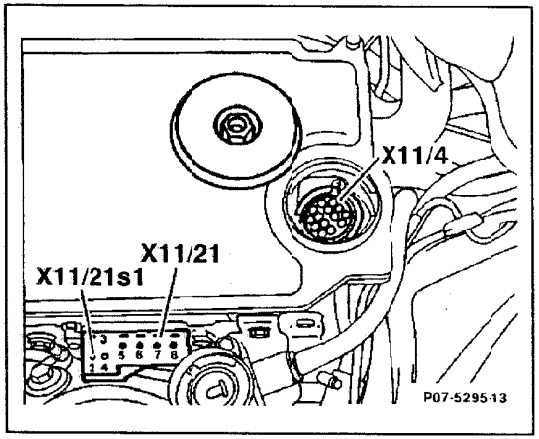

Figure 5

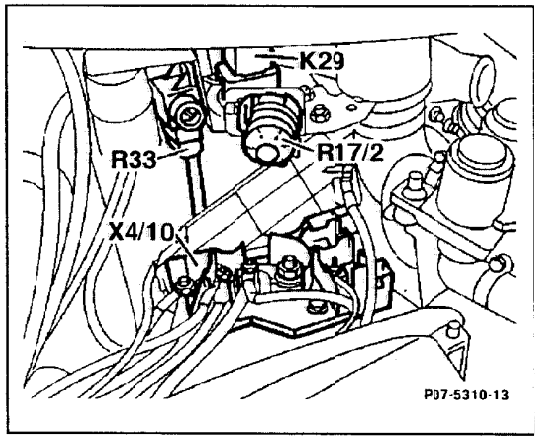

Figure 6

COMPONENT LOCATION

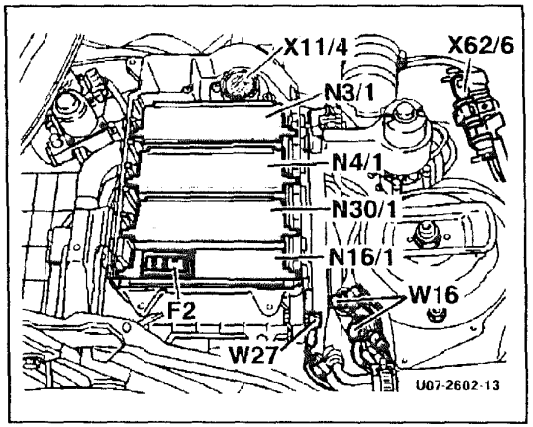

Figure 1

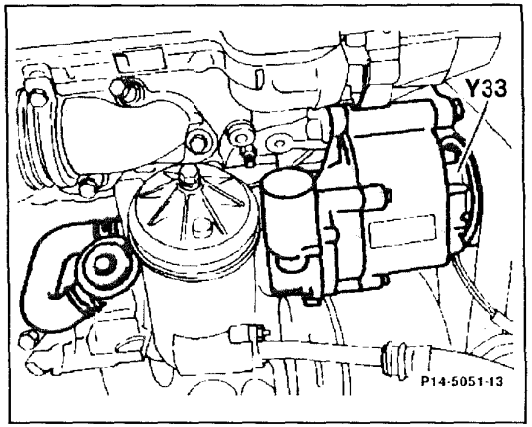

Figure 2

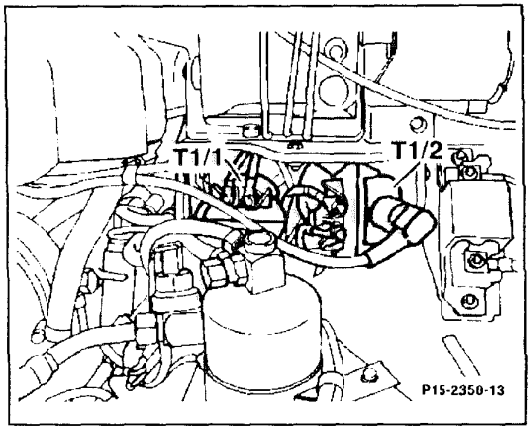

Figure 3

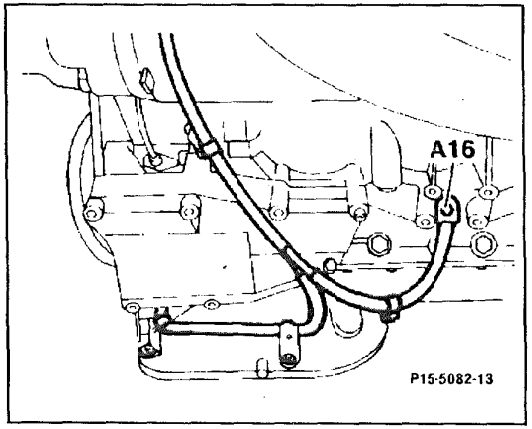

Figure 4

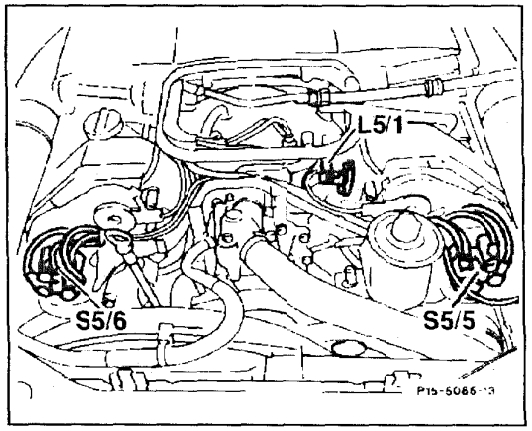

Figure 5

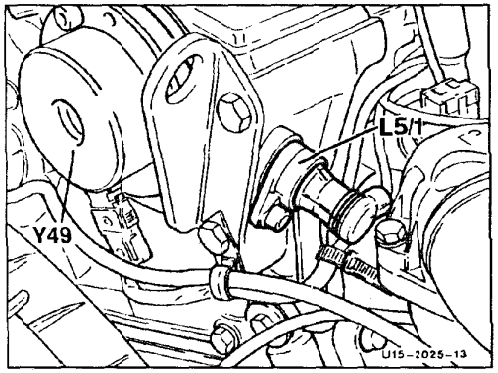

Figure 6

COMPONENT LOCATION

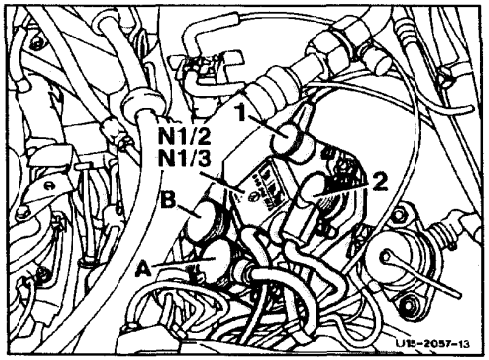

Figure 1

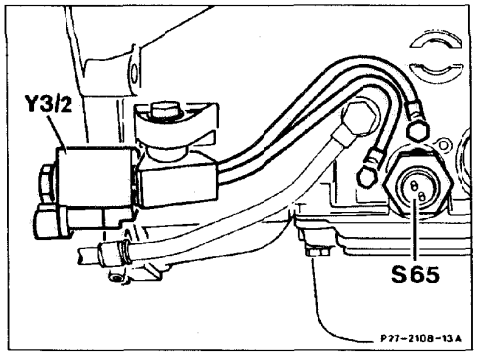

Figure 2

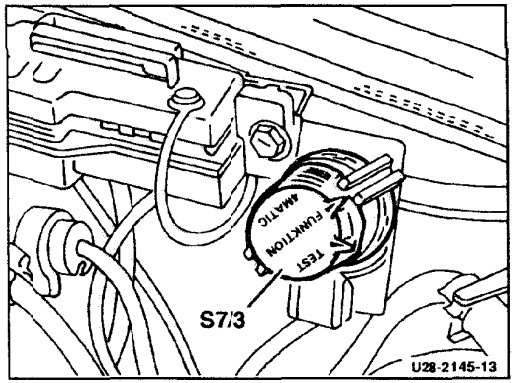

Figure 3

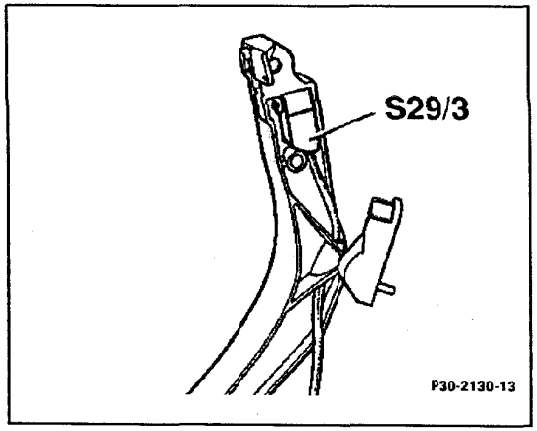

Figure 4

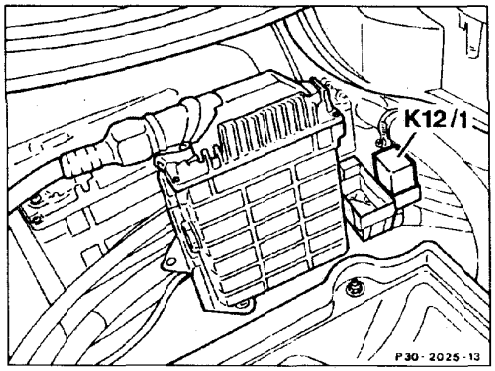

Figure 5

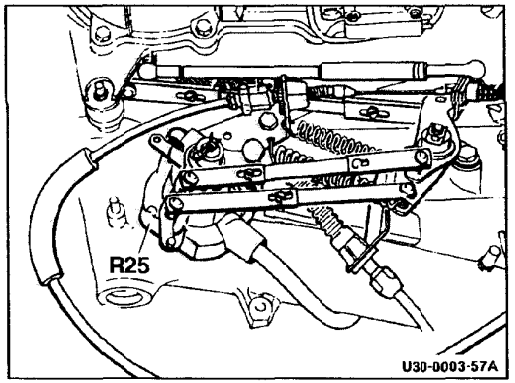

Figure 6

COMPONENT LOCATION

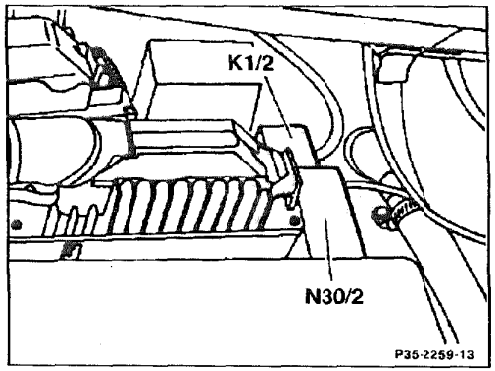

Figure 1

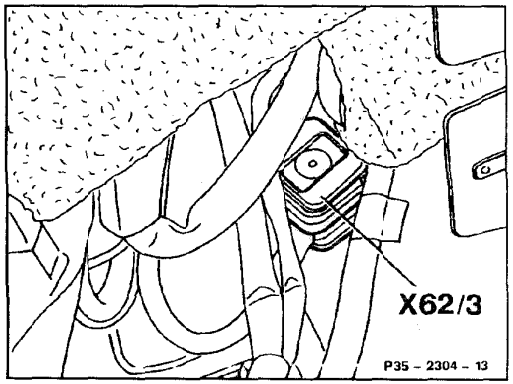

Figure 2

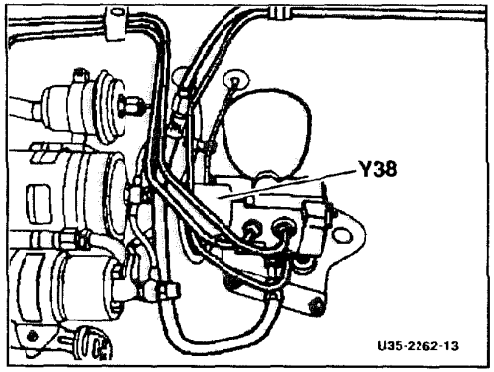

Figure 3

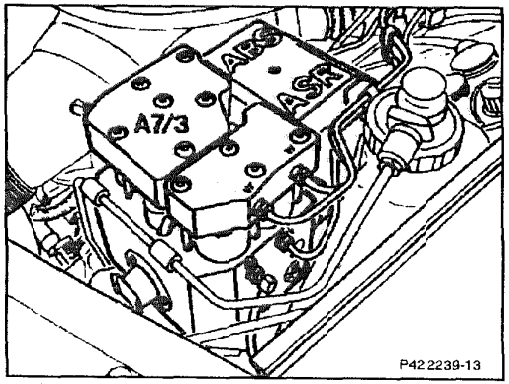

Figure 4

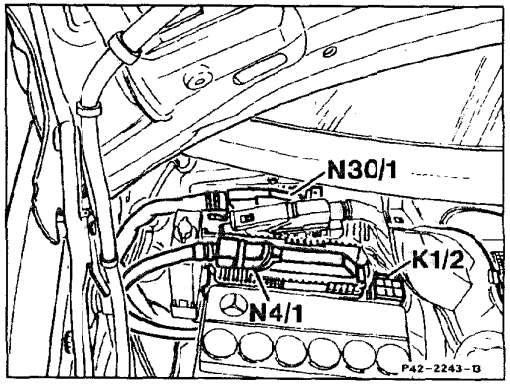

Figure 5

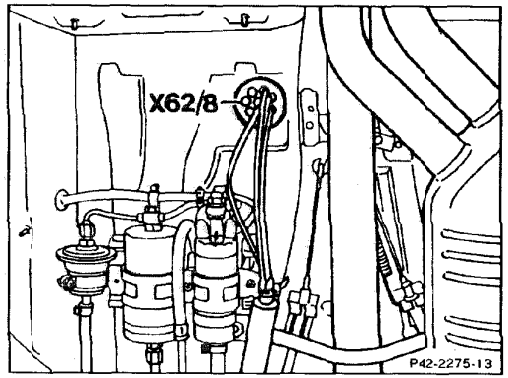

Figure 6

COMPONENT LOCATION

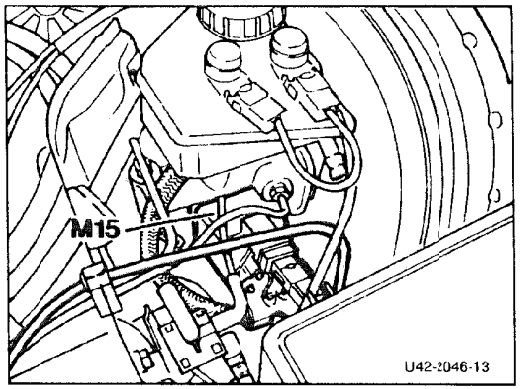

Figure 1

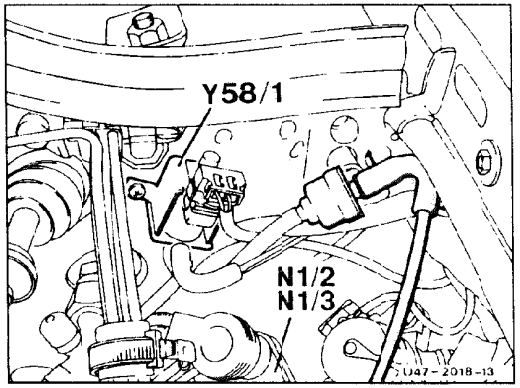

Figure 2

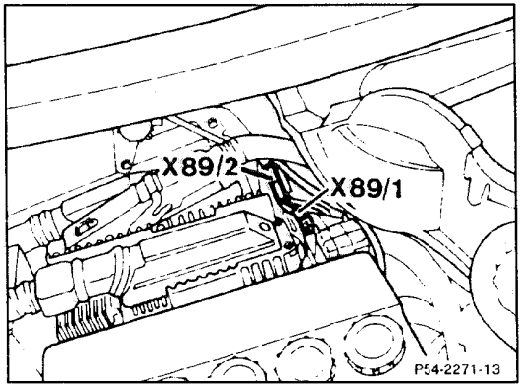

Figure 3

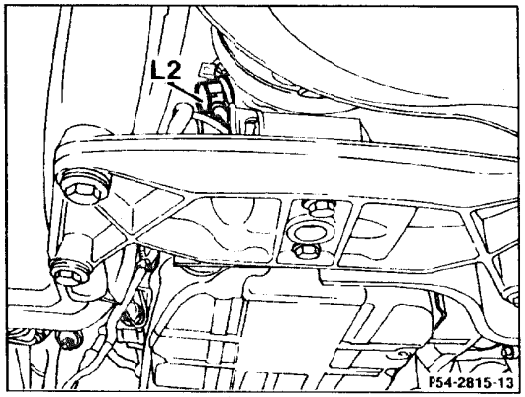

Figure 4

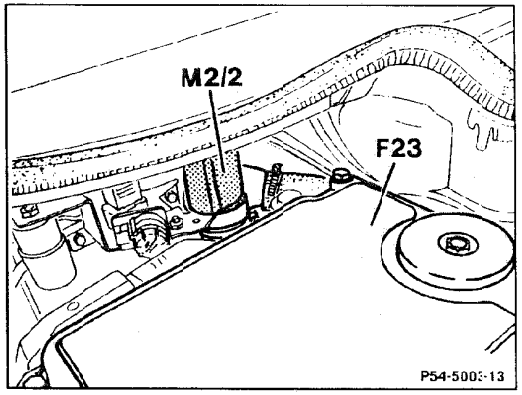

Figure 5

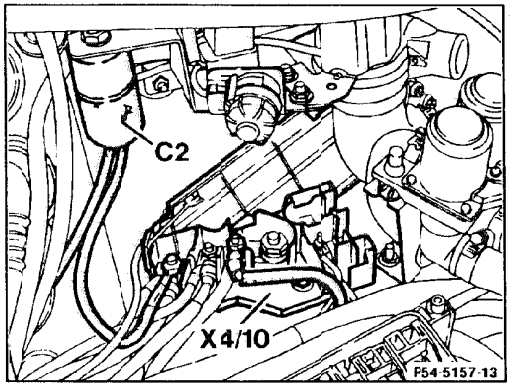

Figure 6

COMPONENT LOCATION

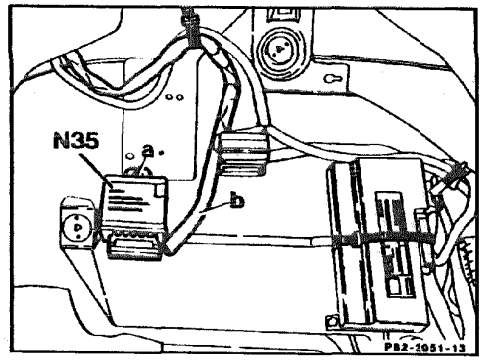

Figure 1

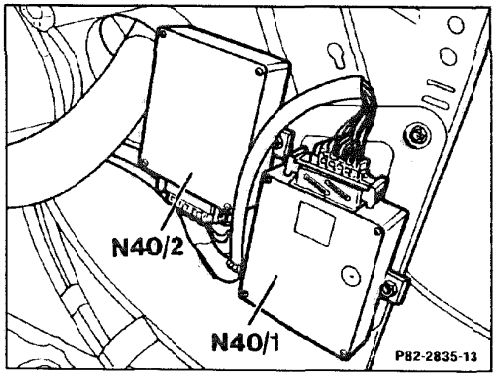

Figure 2

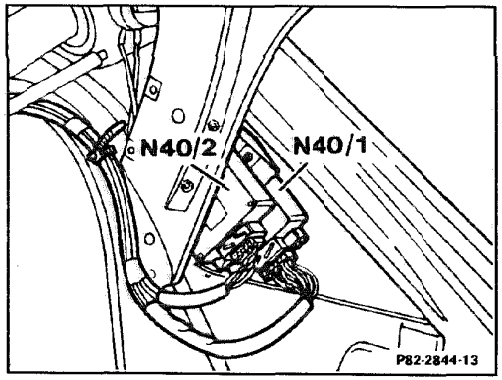

Figure 3

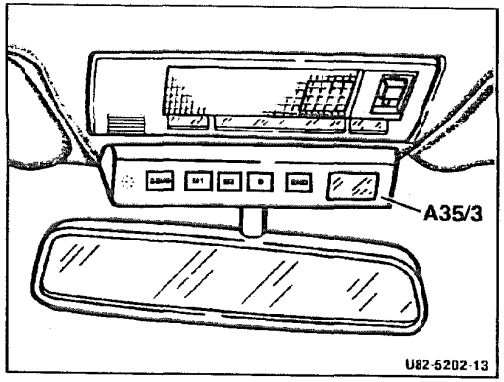

Figure 4

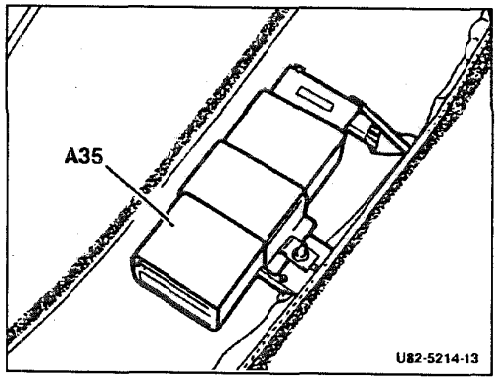

Figure 5

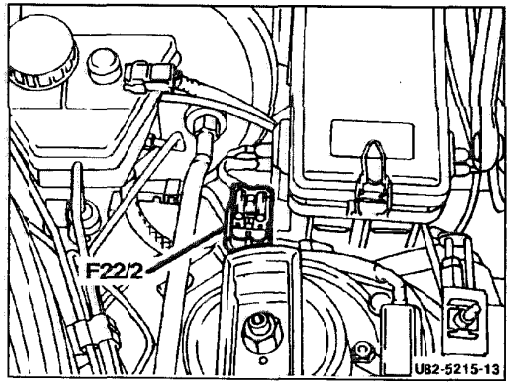

Figure 6

COMPONENT LOCATION

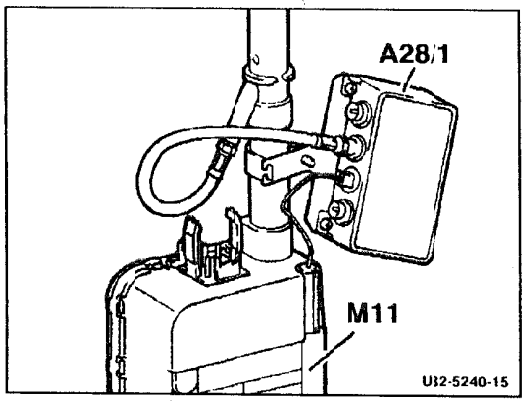

Figure 1

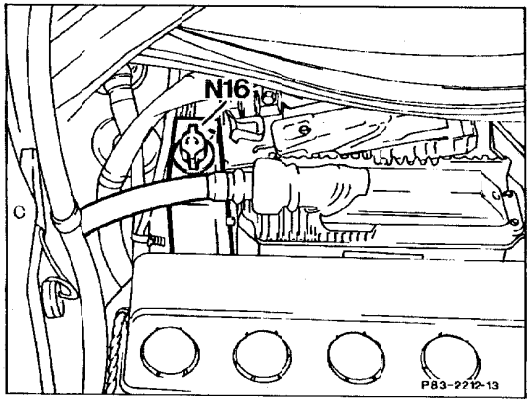

Figure 2

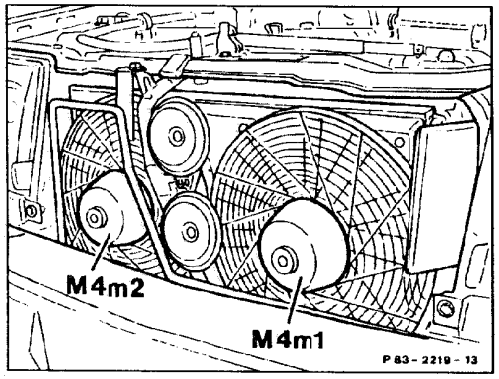

Figure 3

THIS PAGE LEFT BLANK INTENTIONALLY

REVISIONS:

AUTOMATIC CLIMATE CONTROL

INDEX

ACC Grounds Distribution 312
ACC Power Distribution 312
Air Delivery 303
Blower Control 302
Component Location Table 401
Compressor Clutch Control 305
Pushbutton Control Assembly ... 301

PUSHBUTTON CONTROL ASSEMBLY

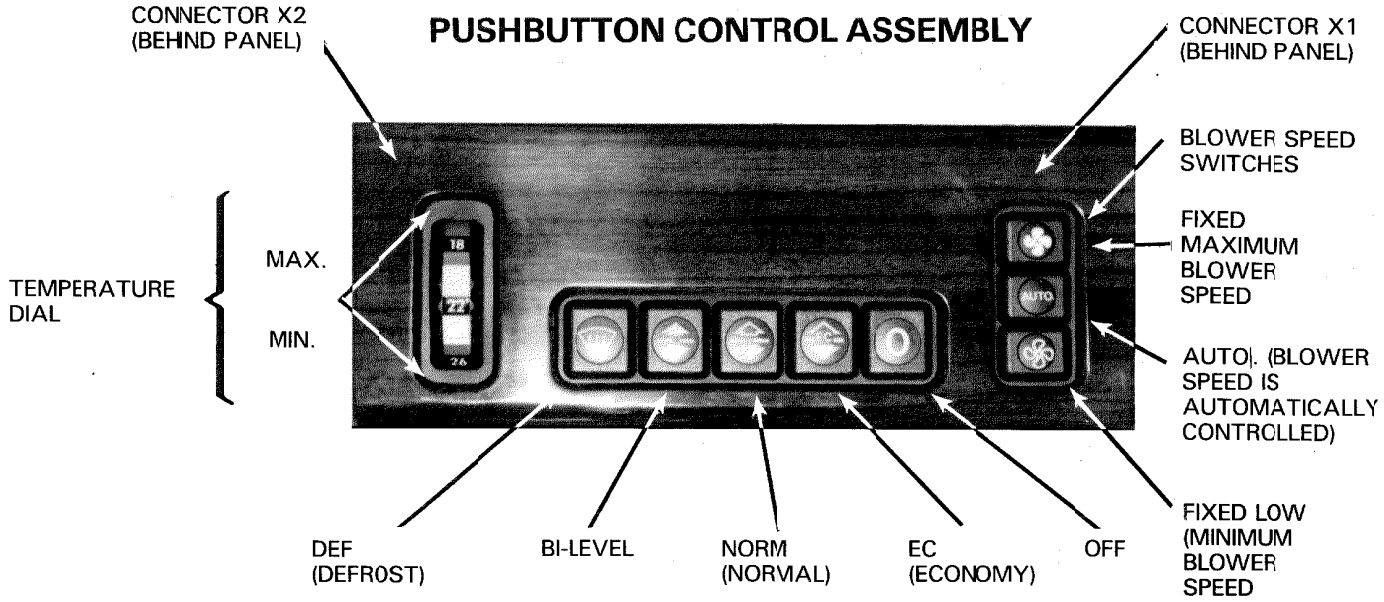

NOTE: ONLY ONE FUNCTION IS TO BE SELECTED AT ANY ONE TIME

REVISIONS:

AUTOMATIC CLIMATE CONTROL BLOWER CONTROL

AS OF MY 1986

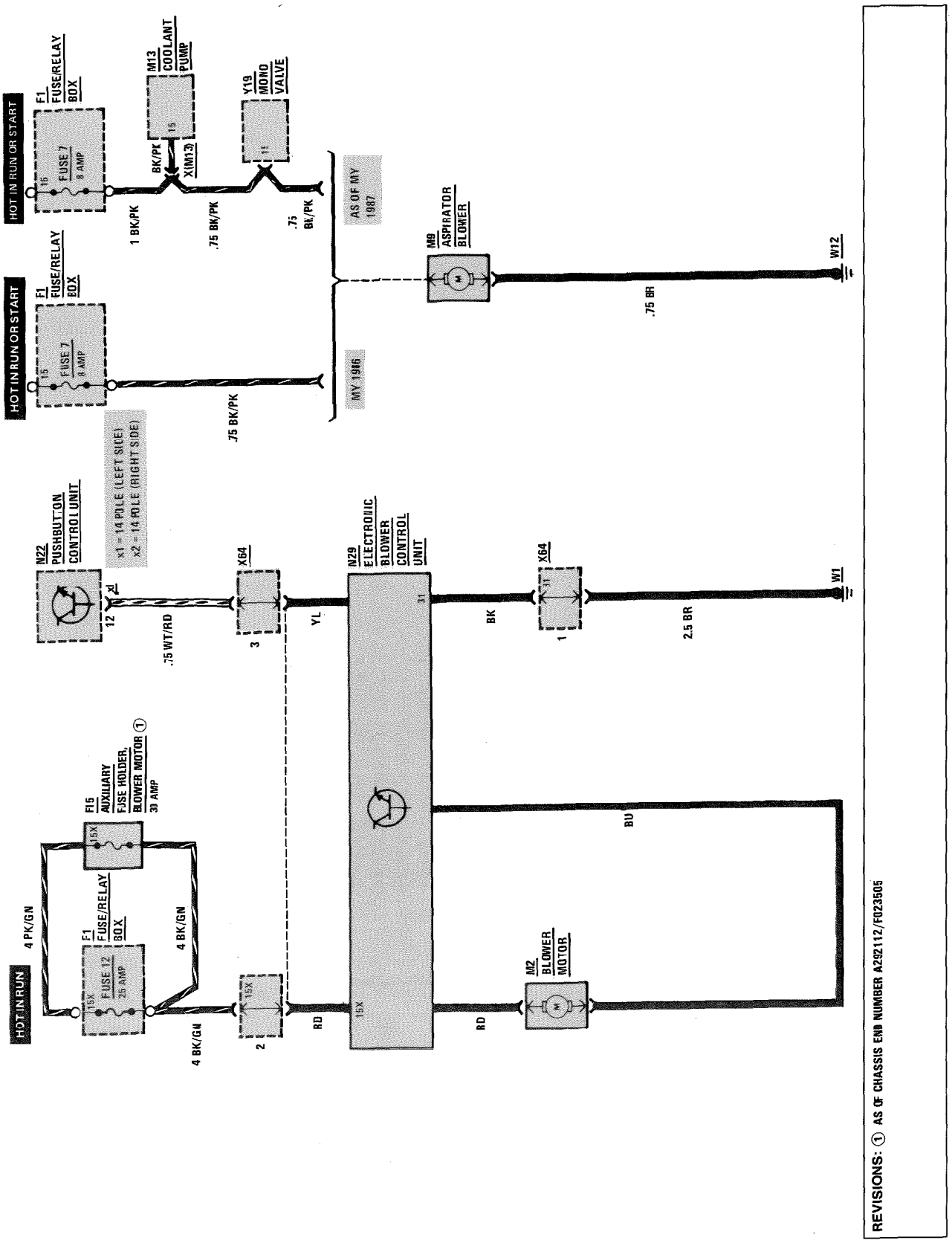

AUTOMATIC CLIMATE CONTROL AIR DELIVERY

MY 1986
300 E

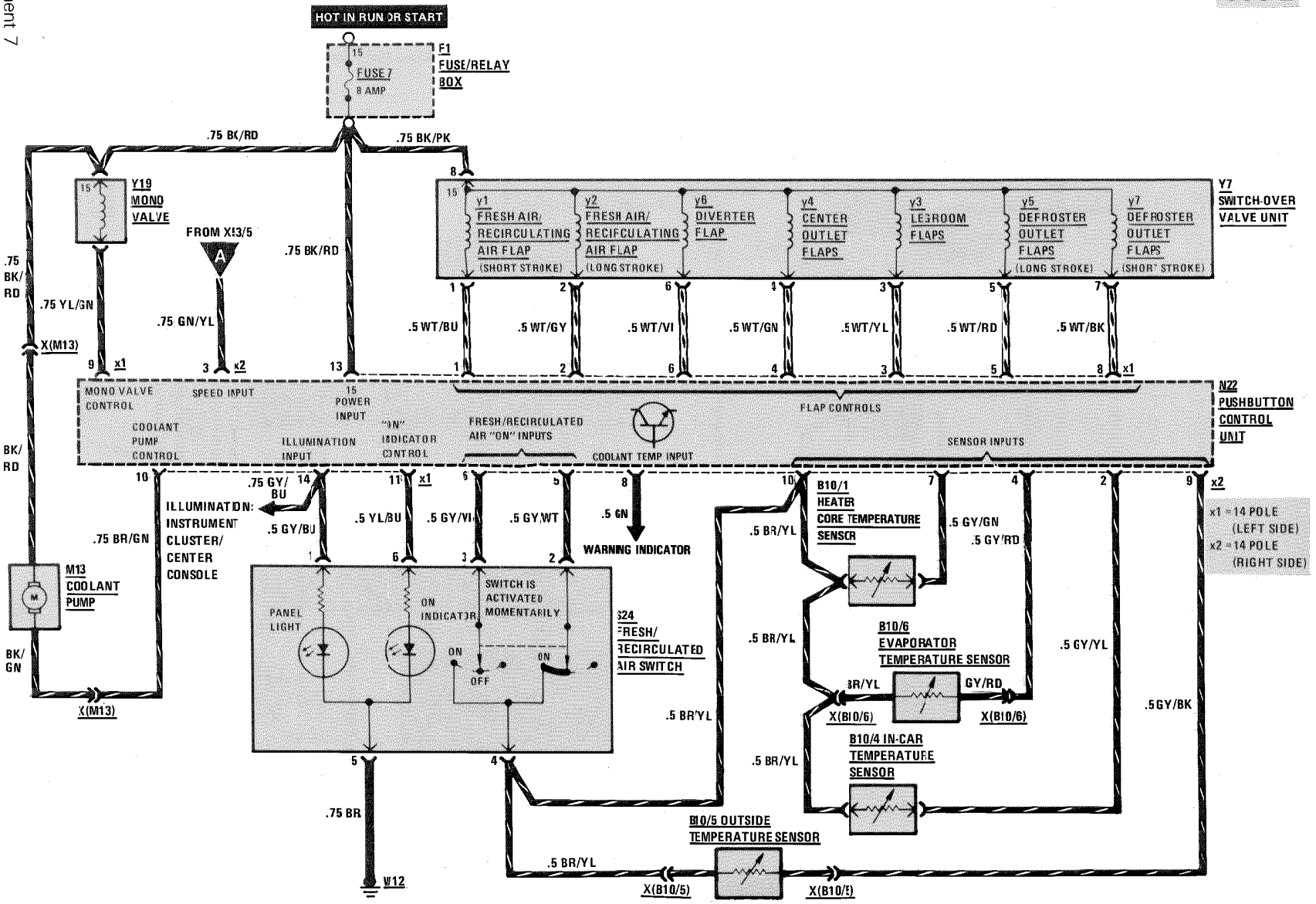

REVISIONS:

AUTOMATIC CLIMATE CONTROL AIR DELIVERY

AS OF MY 1987

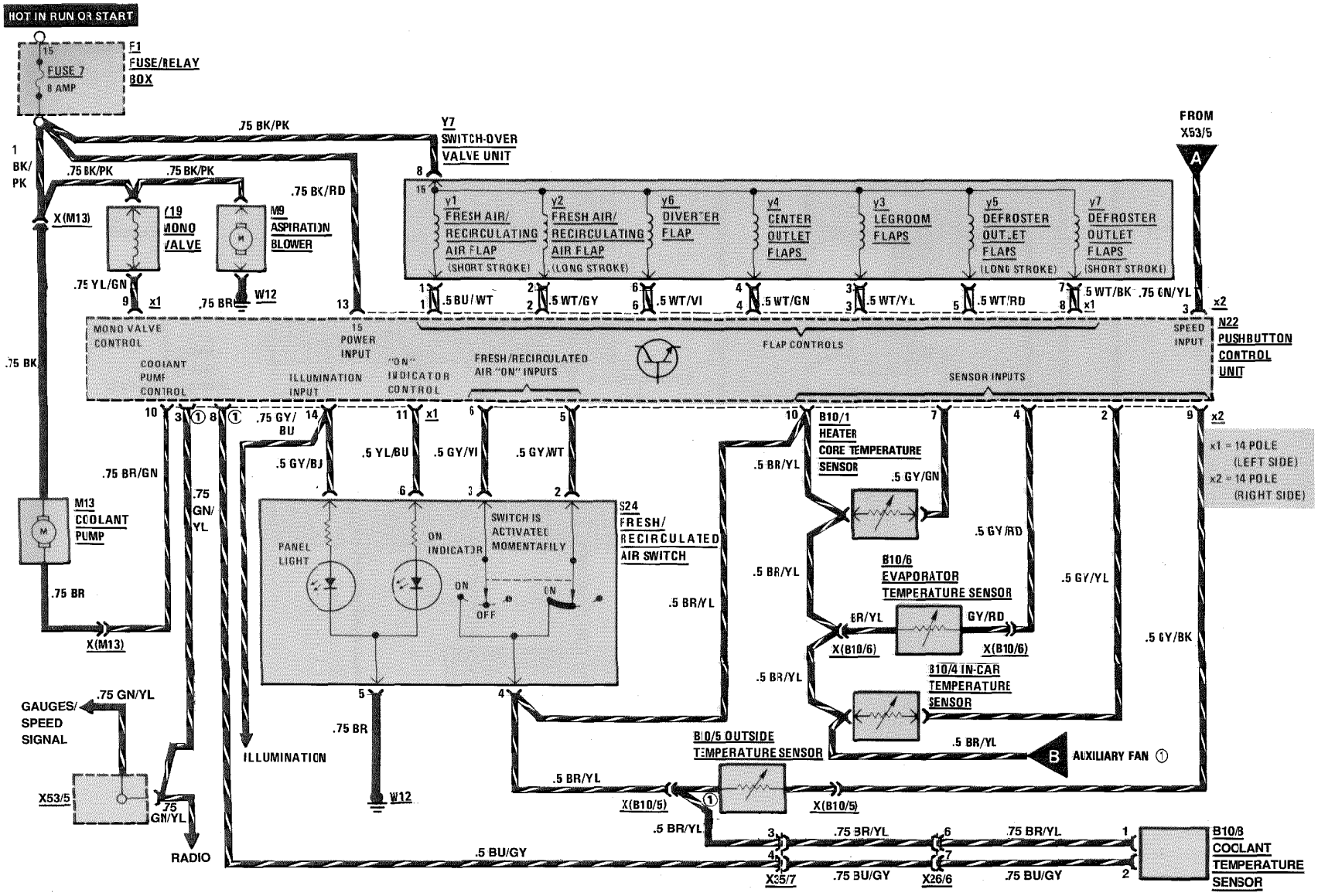

REVISIONS: ① MODELS 400E/500E

AUTOMATIC CLIMATE CONTROL
COMPRESSOR CLUTCH CONTROL

MY 1986
300 E

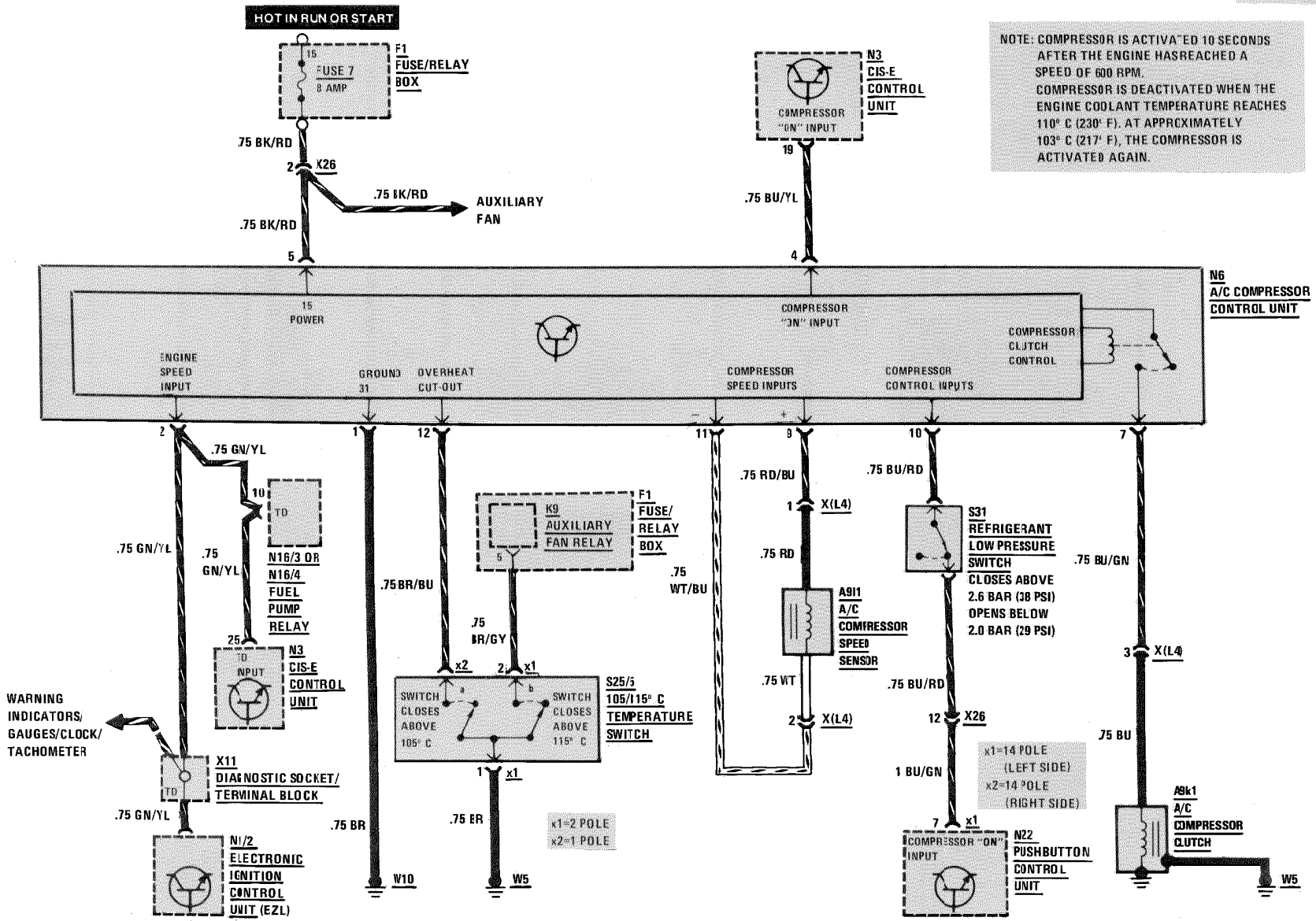

REVISIONS:

AUTOMATIC CLIMATE CONTROL
COMPRESSOR CLUTCH CONTROL

MY 1987-1989

GASOLINE

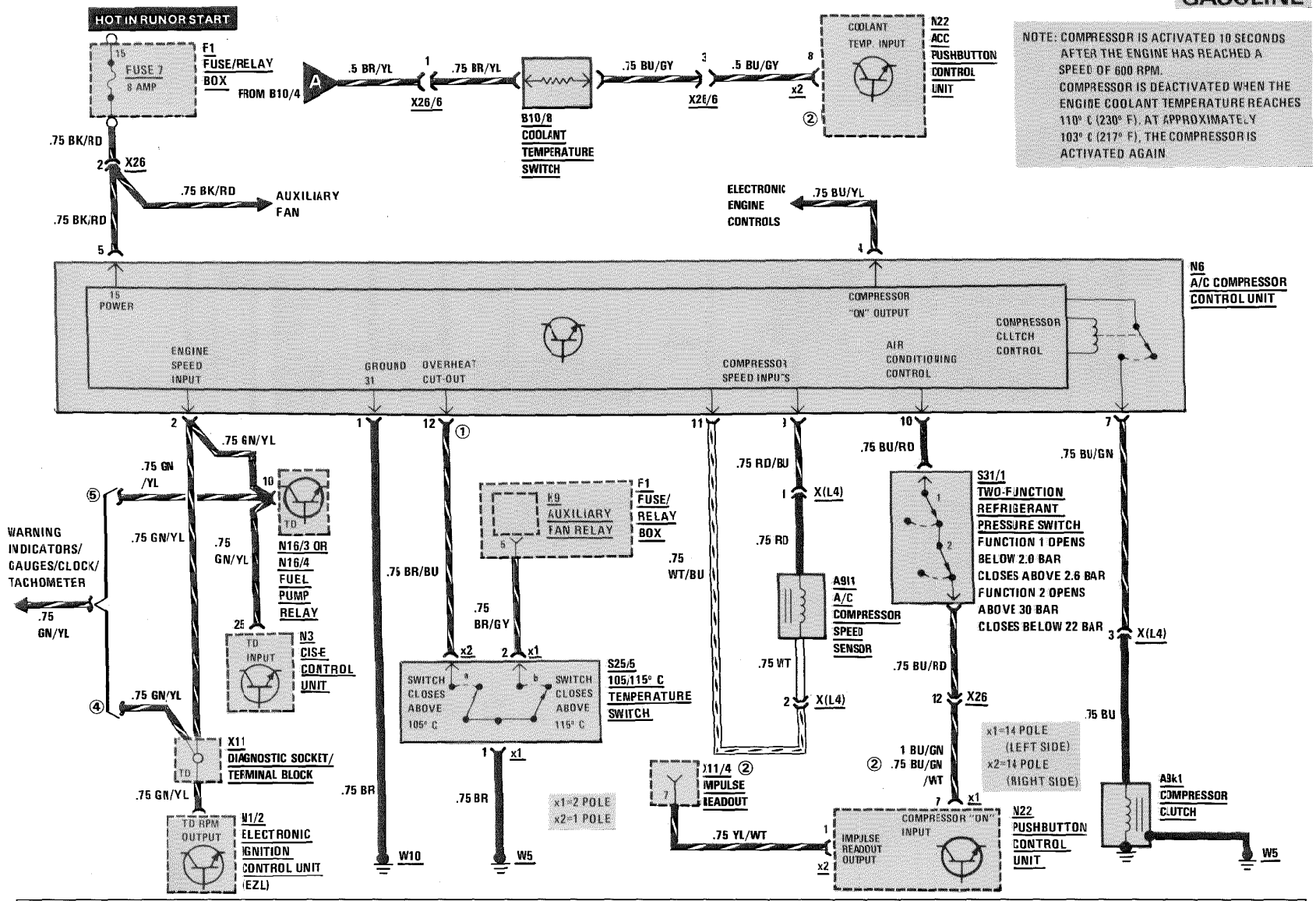

NOTE: COMPRESSOR IS ACTIVATED 10 SECONDS AFTER THE ENGINE HAS REACHED A SPEED OF 600 RPM.
COMPRESSOR IS DEACTIVATED WHEN THE ENGINE COOLANT TEMPERATURE REACHES 110° C (230° F). AT APPROXIMATELY 103° C (217° F), THE COMPRESSOR IS ACTIVATED AGAIN.

REVISIONS:
① MY 1987 ONLY
② AS OF MY 1988
③ MODEL YEAR 1988 PRODUCTION PHASE-IN
④ MY 1987/MY 1988
⑤ AS OF MY 1989

AUTOMATIC CLIMATE CONTROL
COMPRESSOR CLUTCH CONTROL

AS OF MY 1990
GASOLINE

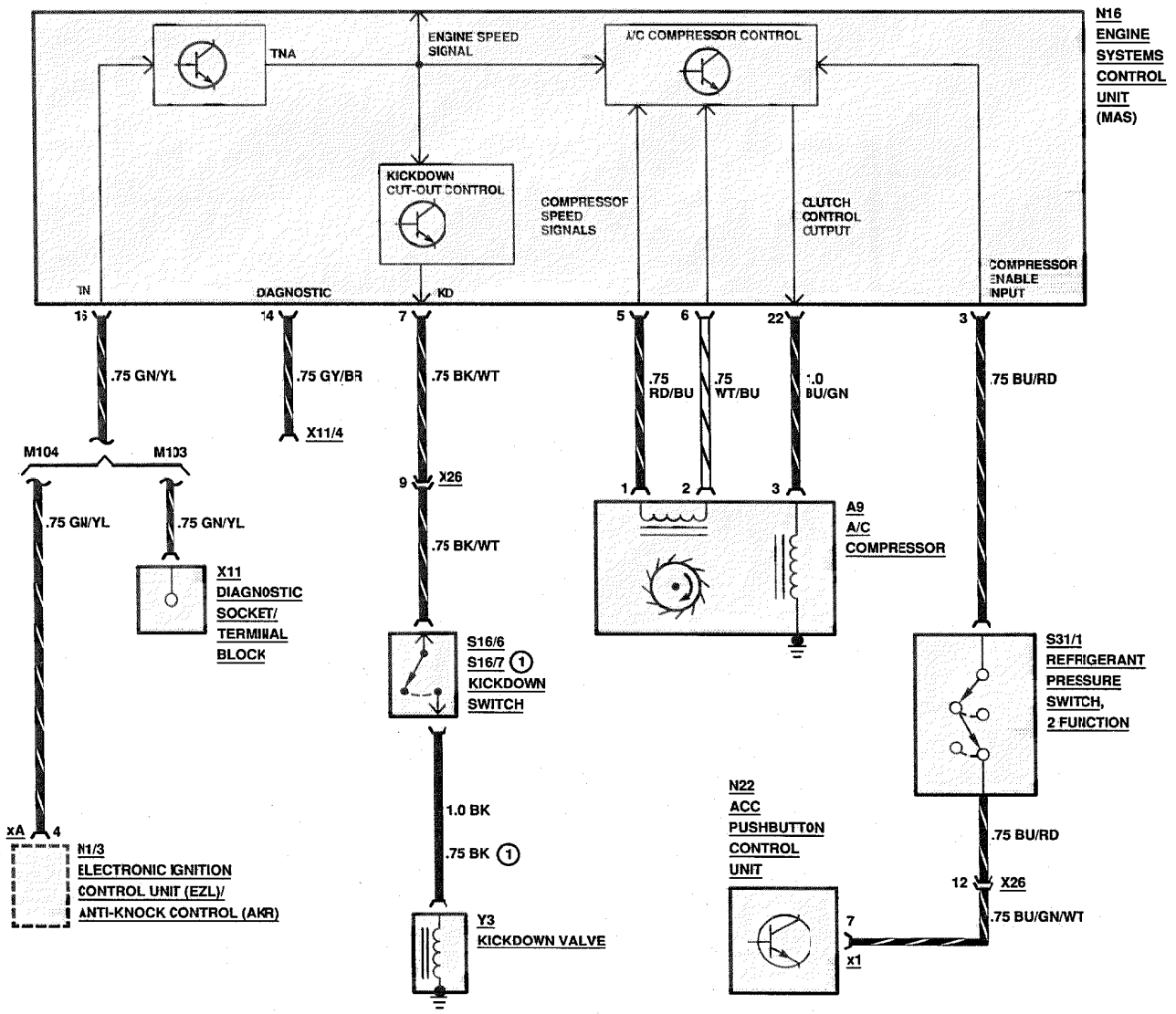

REVISIONS:

AUTOMATIC CLIMATE CONTROL
COMPRESSOR CLUTCH CONTROL

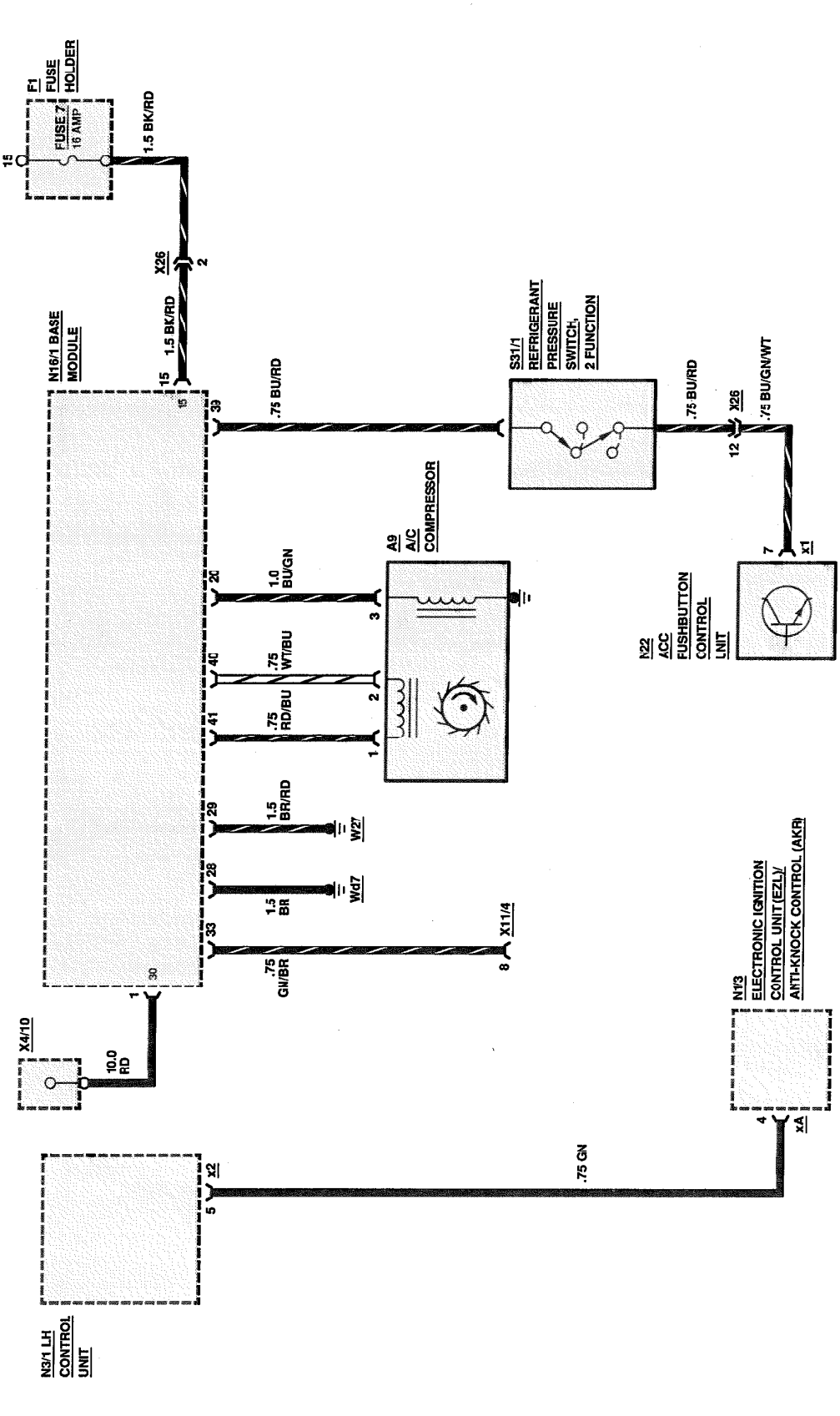

AUTOMATIC CLIMATE CONTROL
COMPRESSOR CLUTCH CONTROL

MY 1987

DIESEL

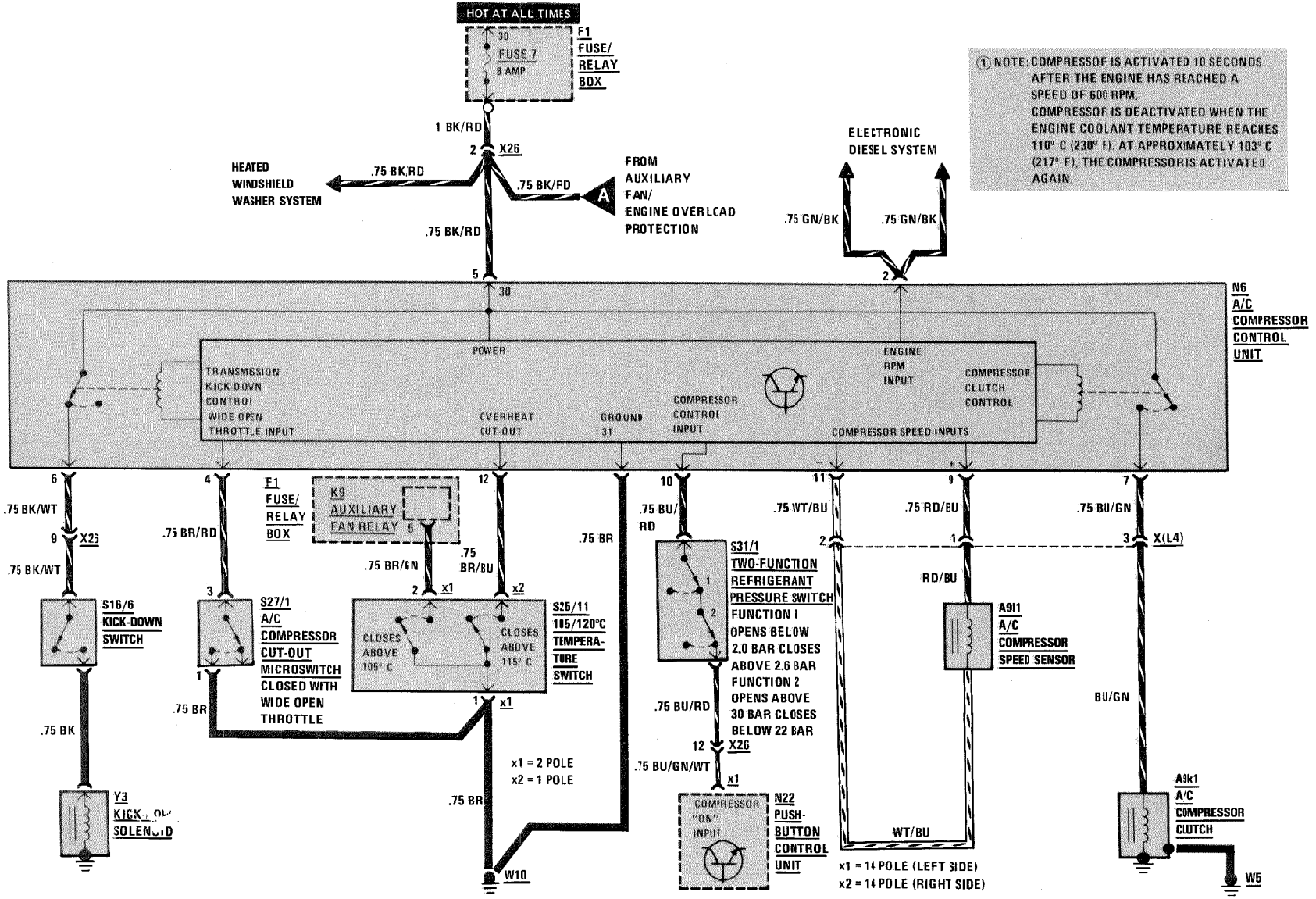

① NOTE: COMPRESSOF IS ACTIVATED 10 SECONDS AFTER THE ENGINE HAS REACHED A SPEED OF 600 RPM.
COMPRESSOF IS DEACTIVATED WHEN THE ENGINE COOLANT TEMPERATURE REACHES 110° C (230° F). AT APPROXIMATELY 103° C (217° F), THE COMPRESSORIS ACTIVATED AGAIN.

REVISIONS: ① MODEL YEAR 1988 PRODUCTION PHASE-IN

AUTOMATIC CLIMATE CONTROL
COMPRESSOR CLUTCH CONTROL

MY 1990-1991

DIESEL

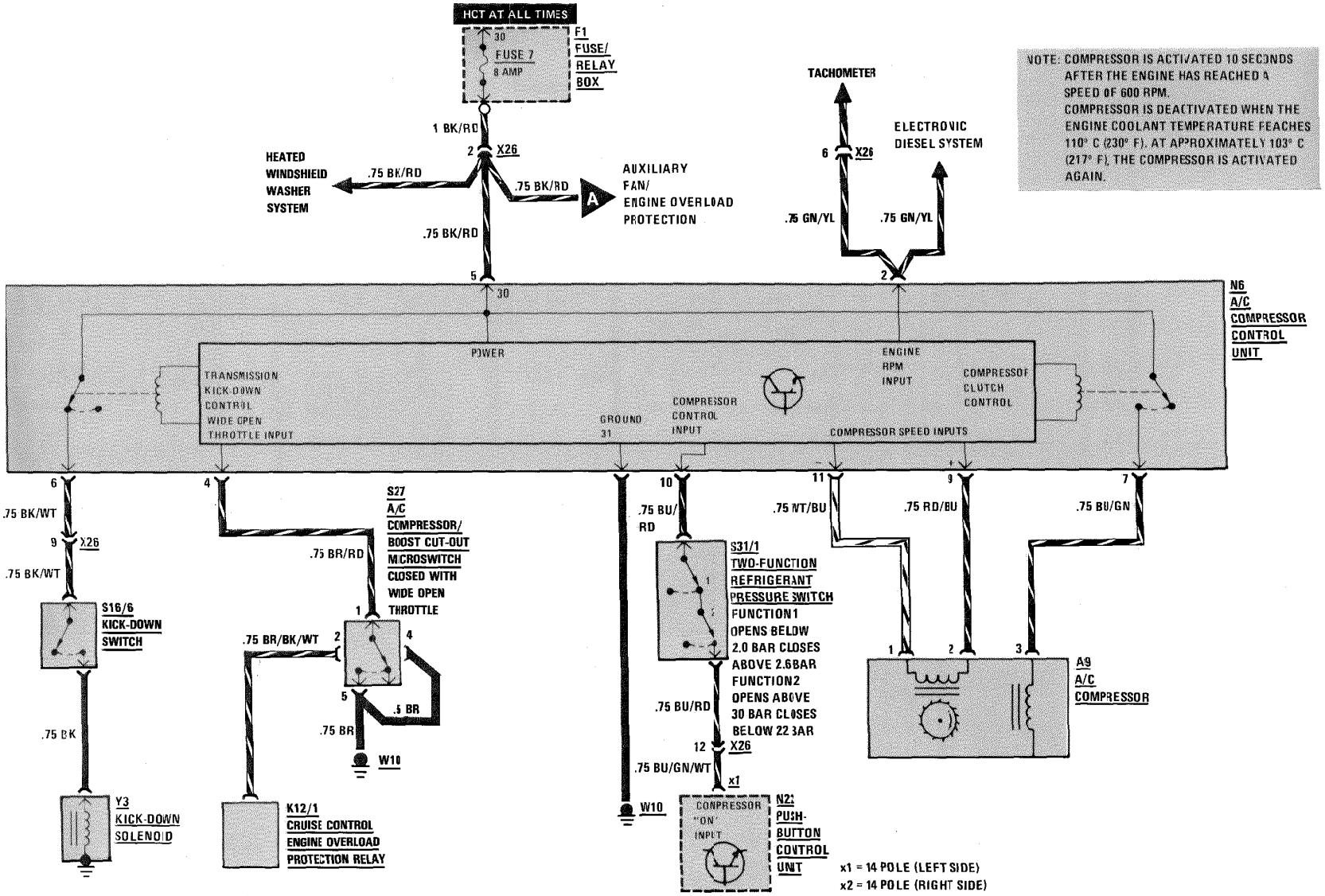

REVISIONS:

AUTOMATIC CLIMATE CONTROL (BLOWER CONTROL)

AS OF MY 1986

(For Component Locations See Page 31 5)

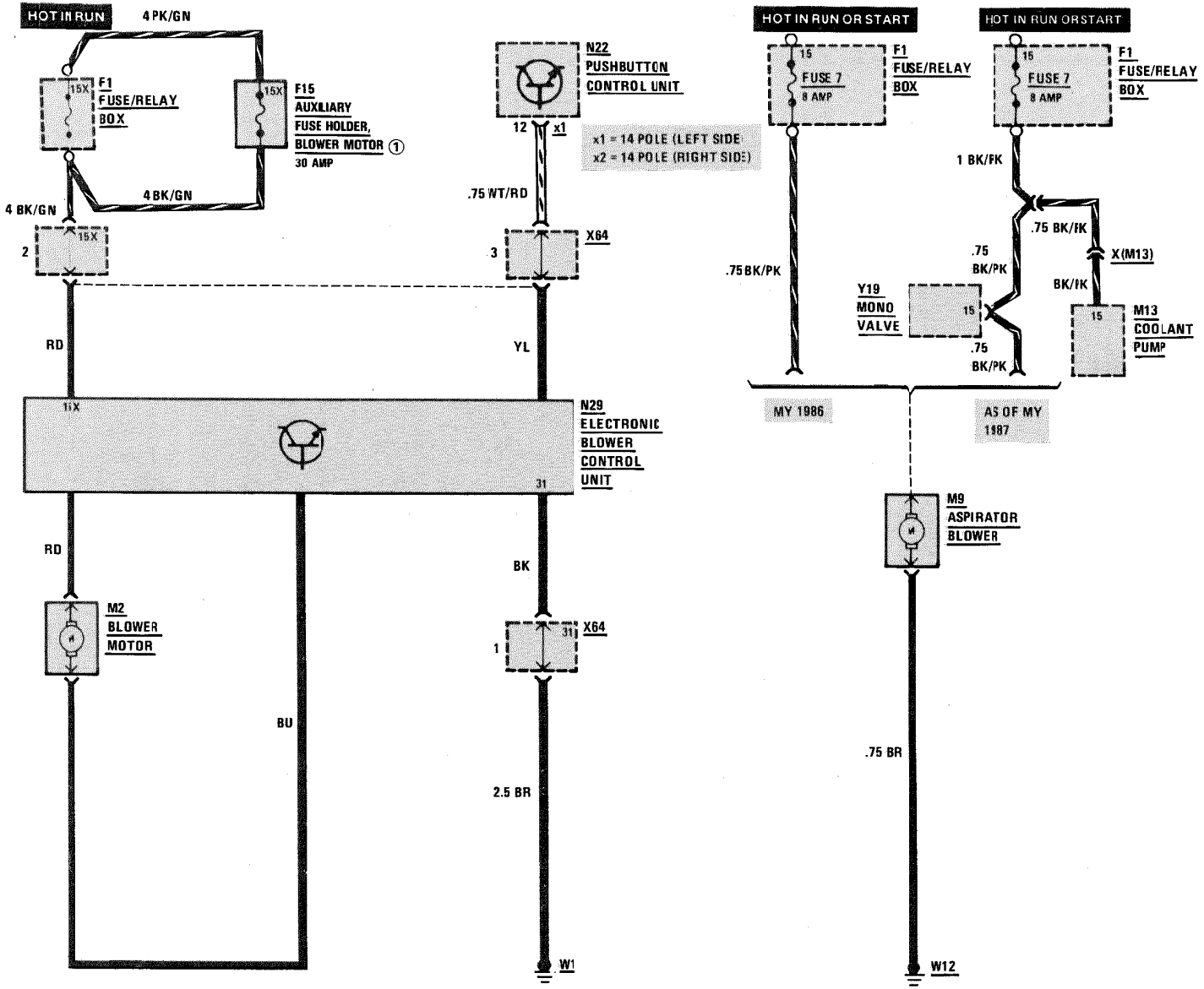

REVISIONS: ① 124.133 AS OF CHASSIS END NUMBER A292112
124.193 AS OF CHASSIS END NUMBER F023505

AUTOMATIC CLIMATE CONTROL POWER AND GROUND DISTRIBUTION

MY 1986
300 E

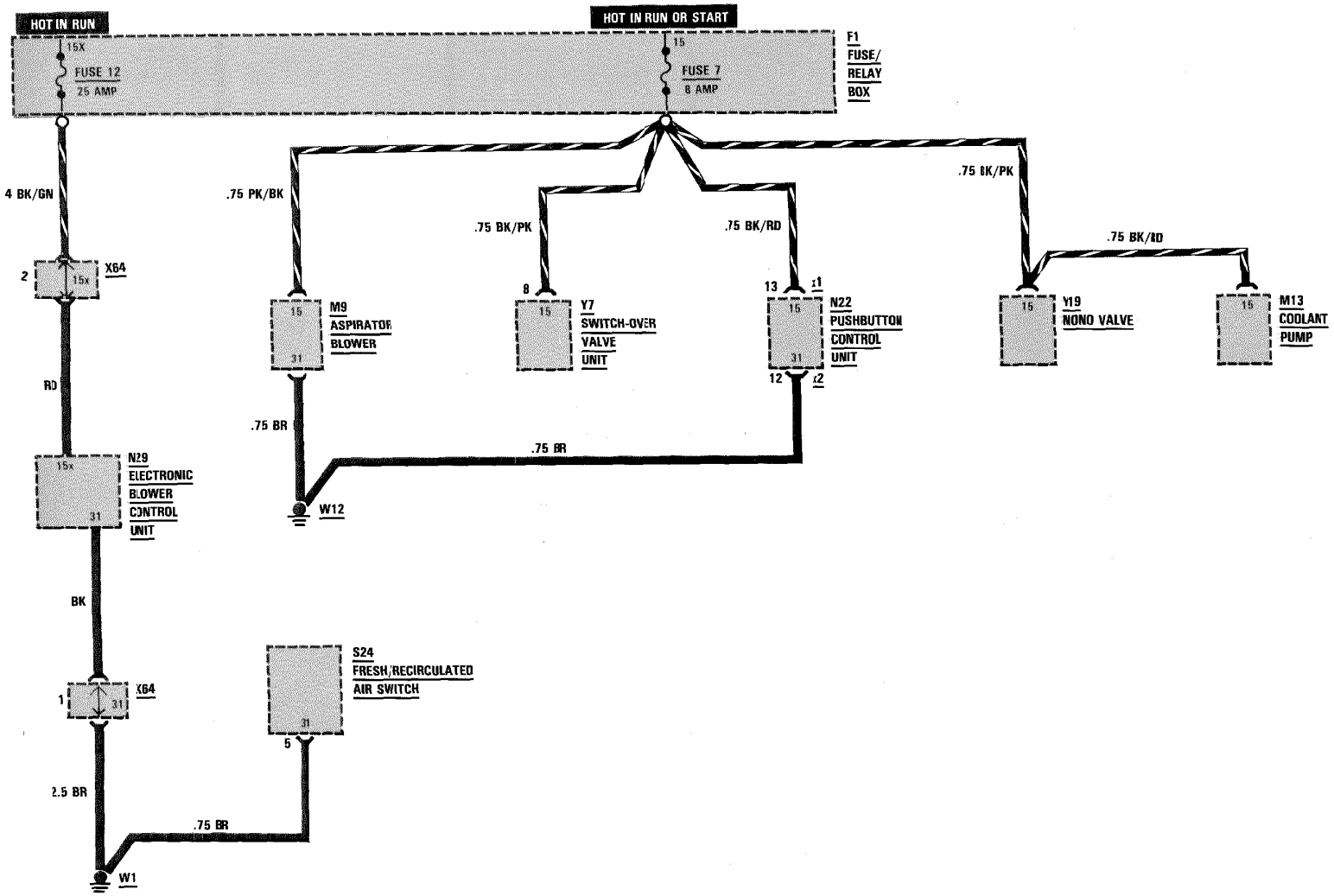

REVISIONS:

AUTOMATIC CLIMATE CONTROL POWER AND GROUND DISTRIBUTION

AS OF MY 1987

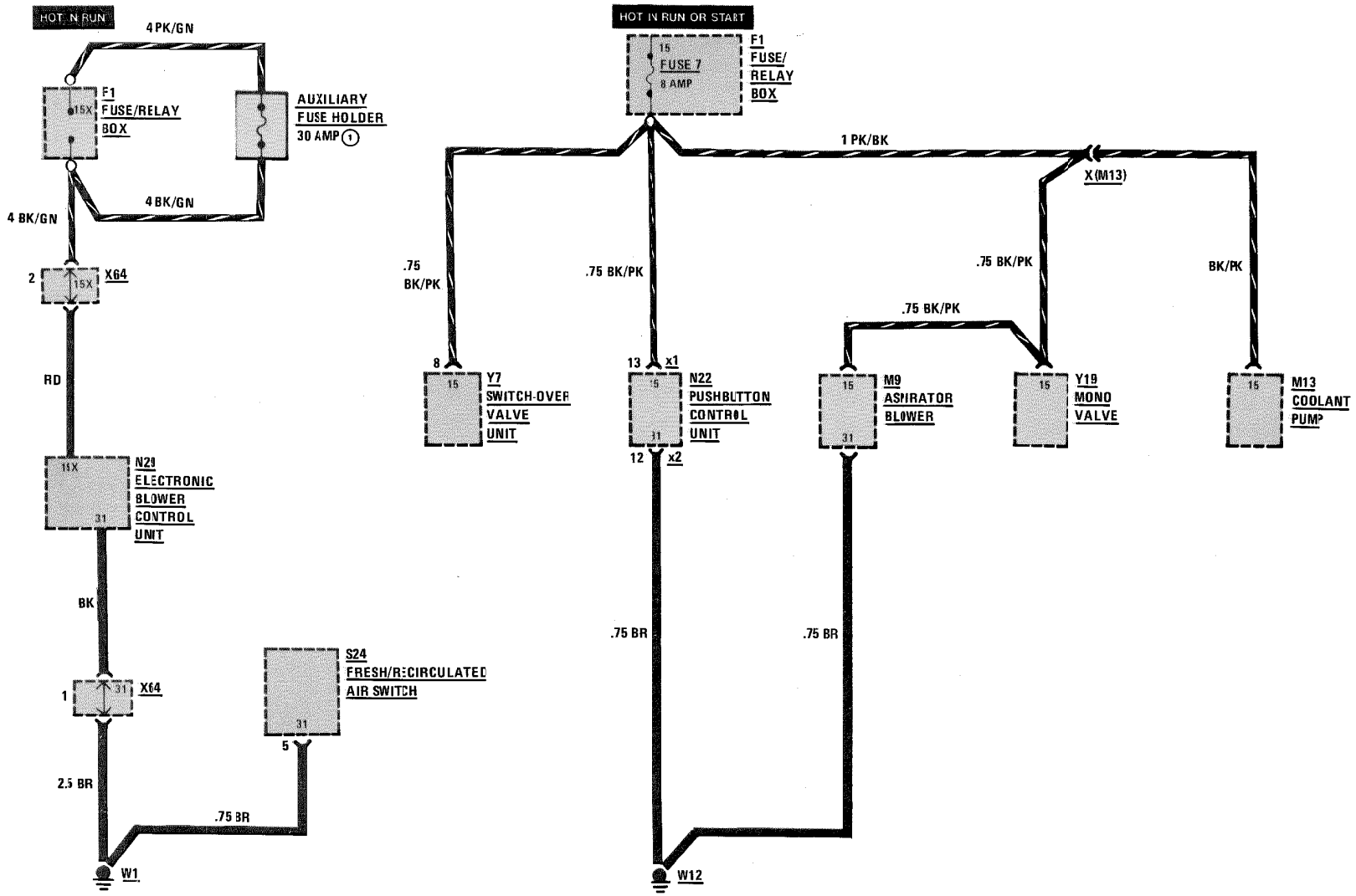

REVISIONS: ① AS OF CHASSIS END NUMBER A292112/F023505

THIS PAGE LEFT BLANK INTENTIONALLY

REVISIONS:

Installation instructions

Transmission oil cooler with supplementary fan

27.1

Models 124.133/193/333/393

The transmission oil cooler with supplementary fan is required only on vehicles with air conditioning or automatic climate control and trailer coupling, when the trailer load amounts to more than 1500 kg total load.

Scope

1 Remove battery.

2 Remove cover (arrow).

3 Remove air cleaner housing.

4 Remove RH turn signal lamp and headlamp.

5 Remove both covers of fuse/relay box. Then loosen fuse carrier (a) and put aside.

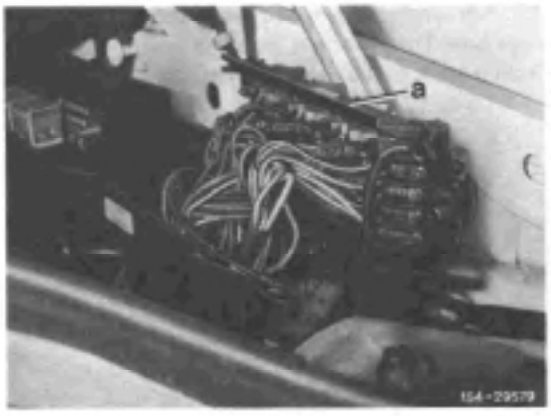

Copyright DaimlerChrysler AG 29.01.2003 CD-Ausgabe G/05/02 Will not be recorded by Modification services

6 Loosen relay holder and engage 6-pole connector of auxiliary harness in characteristic field E.

7 Insert relay holder and connect relay (K25).

8 Connect pink/red line to fuses 7 and 11 (input end) according to identification.

9 Connect black/blue line to fuse 11 (output end).

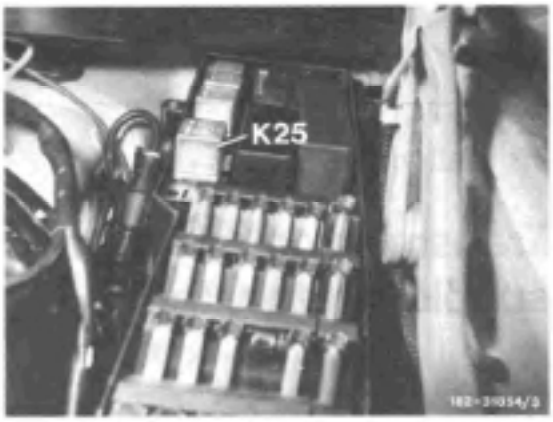

10 Loosen connector (X26), open connecting element and remove violet line (location 10) from connector. Then close connecting member and fasten connector again.

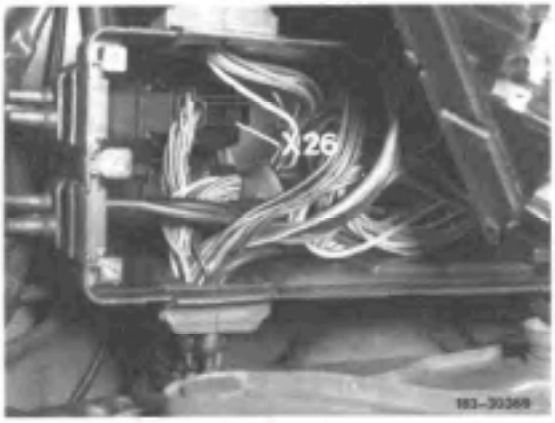

11 Mount insulating body to removed violet line and connect with single-pole plug of supplementary harness (connector X22/3).

12 Remove three-point connector and rubber grommet of supplementary harness (refer to page 7).

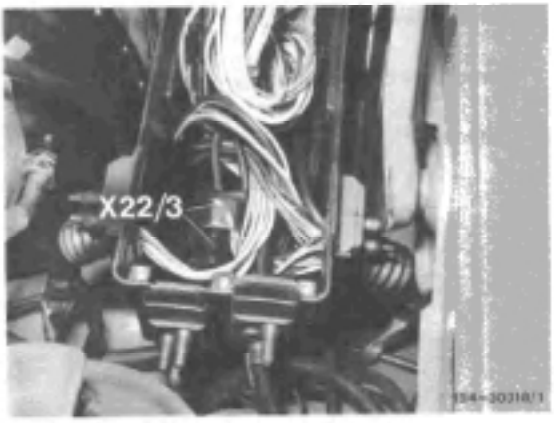

13 Pull supplementary harness at front out of fuse/relay box. Then continue installing lower housing from the left to the right and fasten.

Copyright DaimlerChrysler AG 29.01.2003 CD-Ausgabe G/05/02 Will not be recorded by Modification services

14 Connect grounding line to ground (W10).

15 Install supplementary harness along RH wheel assembly up to front cross member and fasten.

16 Fasten fuse carrier (a). Insert fuse 11.

17 Put back cover of fuse/relay box.

18 Remove noise capsule front member.

19 Remove RH noise capsule side member.

20 Mark cutout and bores on noise capsule side member and finish cutout.

21 Install noise capsule side member.

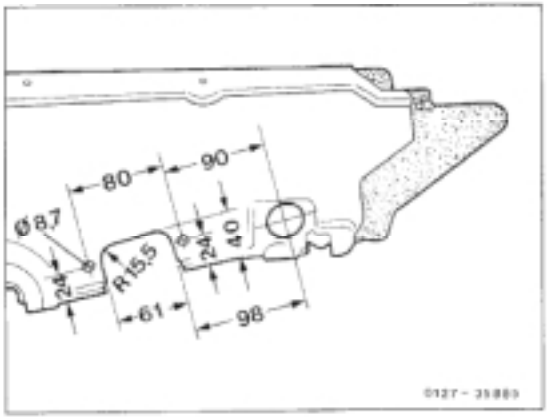

22 Remove oil hoses (a and b), as well as oil line (c).

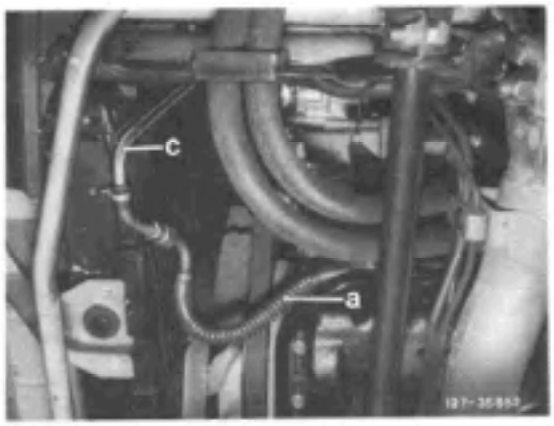

a Oil hose
b Oil line

Copyright DaimlerChrysler AG 29.01.2003 CD-Ausgabe G/05/02 Will not be recorded by Modification services

b Oil hose

23 Mount closing plug (1) at top and below on oil cooler.

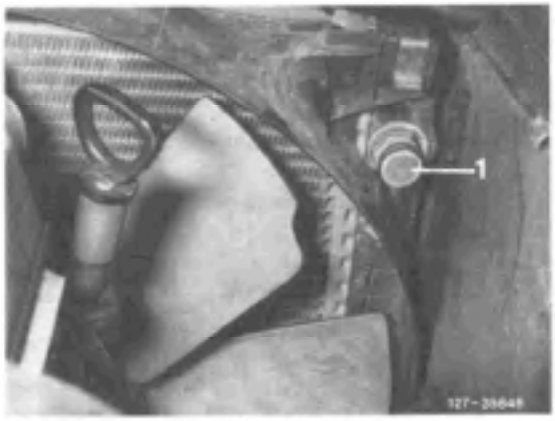

24 Remove cover (a).

25 Mount rubber grommets and rubber buffer on wheel assembly.

26 Insert air guide scoop and fasten at the right.

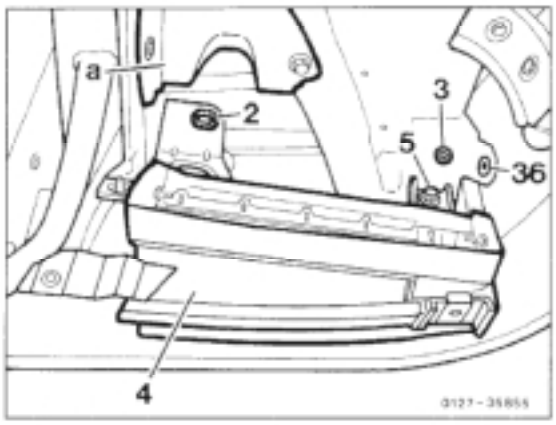

2 Rubber grommet
3 Rubber grommet
4 Air guide scoop
5 Collar nut
36 Rubber buffer
a Cover

Copyright DaimlerChrysler AG 29.01.2003 CD-Ausgabe G/05/02 Will not be recorded by Modification services

27 Insert rubber grommets into fastening bracket.

28 Screw in temperature switch with sealing ring at oil cooler.

29 Mount fastening bracket to oil cooler.

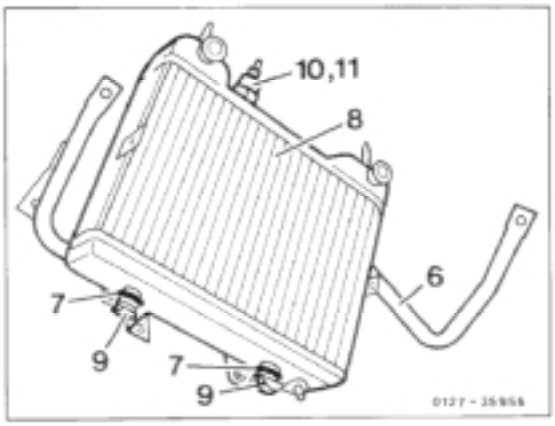

6 Fastening bracket
7 Rubber grommet
8 Oil cooler
9 Clip
10 Temperature switch
11 Sealing ring

30 Mount blower housing and screw laterally to fastening bracket with screws N 4.8 x 13 and washers B4.2.

31 Insert blower while pulling harness through blower housing and inserting rubber grommet. Then screw blower to fastening bracket, using nut with plastic insert for this purpose.

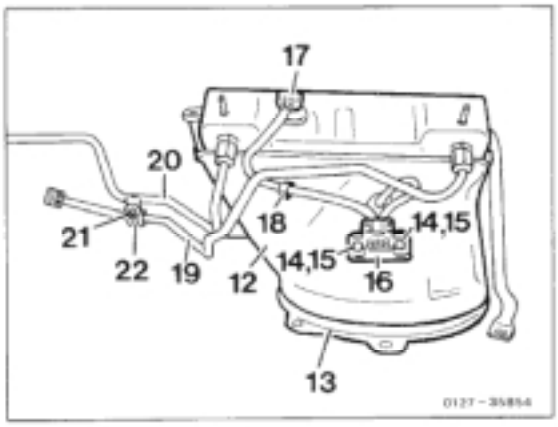

12 Blower housing
13 Blower
14 Plate nut
15 Screw B4.8x16
16 Plug
17 Socket
18 Clamp
19 Oil line
20 Oil line
21 Screw M6x16
22 Clamp

32 Insert plate nuts into blower housing and screw on 3-pole plug.

33 Insert lines into 3-pole plug (refer to wiring diagram) and close plug.

34 Attach socket to blower harness (refer to wiring diagram) and press onto temperature switch.

35 Mount oil lines on oil cooler and connect both oil lines with clamp.

Copyright DaimlerChrysler AG 29.01.2003 CD-Ausgabe G/05/02 Will not be recorded by Modification services

36 Insert completed oil cooler into wheelhouse while plugging 3-pole socket of supplementary harness onto plug on blower housing. Then fasten oil cooler.

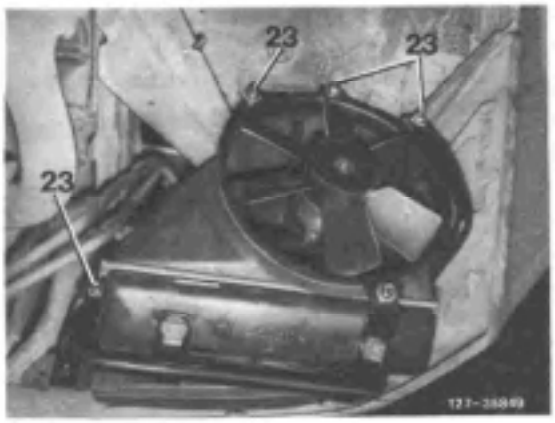

23 Nut with plastic insert M6

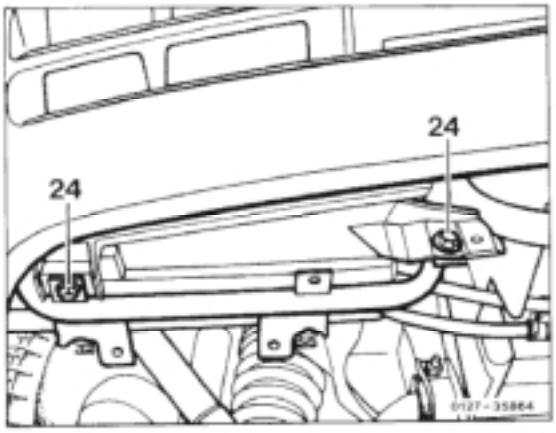

24 Screw M6x16

37 Mount cover.

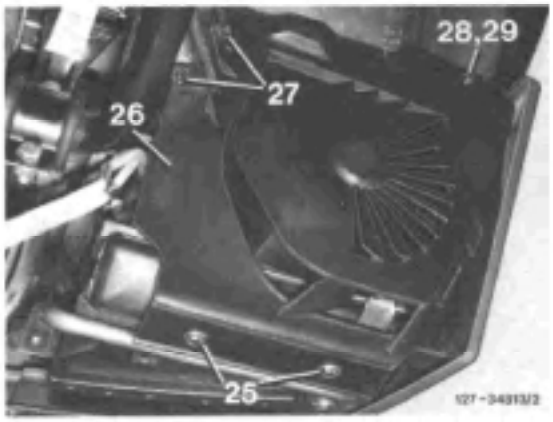

25 Screw M6x12
26 Cover
27 Plastic nut
28 Plate nut
29 Screw B6.3x16

38 Mount rubber grommet to oil lines and noise capsule side member.

39 Fasten oil line with existing clamp to cooler, insert nut (M6) into cooler fastening for this purpose.

40 Mount oil hoses.

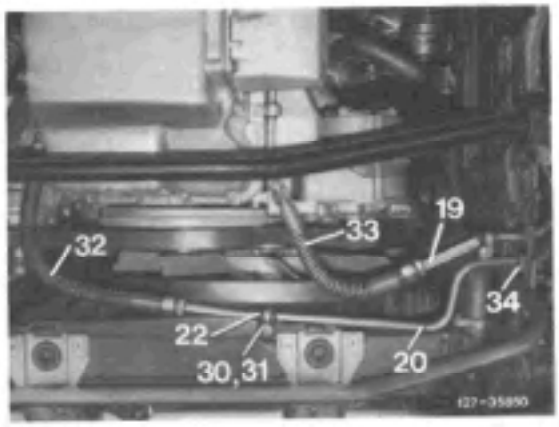

19 Oil line
20 Oil line
22 Clamp
30 Nut M6
31 Screw M6x16
32 Oil hose
33 Oil hose
34 Rubber grommet

Copyright DaimlerChrysler AG 29.01.2003 CD-Ausgabe G/05/02 Will not be recorded by Modification services

41 Install battery and connect.

42 Check blower for function, while switching on ignition and bridging temperature switch. Switch off ignition after checking.

43 Install headlamp and turn signal.

44 Install air cleaner housing.

45 Check transmission oil level of automatic transmission and correct (refer to Maintenance Manual Volume 2, 2710).

46 Check transmission oil cooler and lines for leaks.

47 Install noise capsule front member.

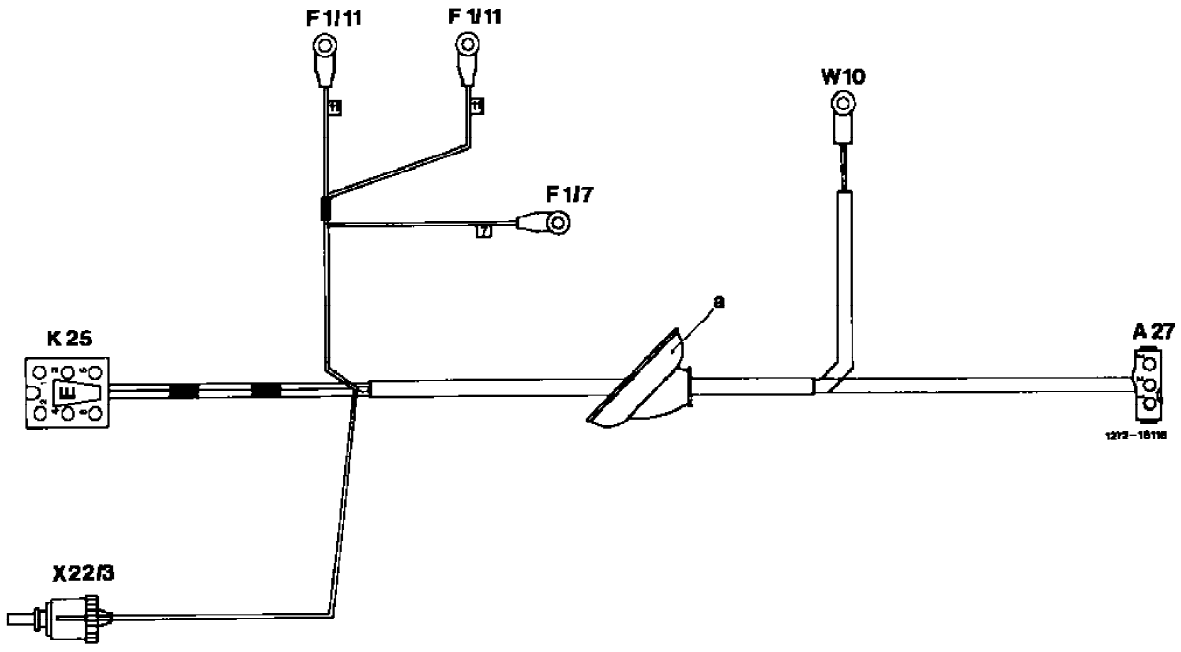

Harness

A27 3-pin connector on blower housing
F1 Fuse/relay box
Fuse 7 (input end) terminal 15 (line color pink/red)
Fuse 11 (input end) terminal 15 (line color pink/red)
Fuse 11 (output end) terminal 15 (line color black/blue)
W10 Ground, battery
X22/3 Connector transmission-cooling 1-pin
a Rubber grommet (remove)

Copyright DaimlerChrysler AG 29.01.2003 CD-Ausgabe G/05/02 Will not be recorded by Modification services

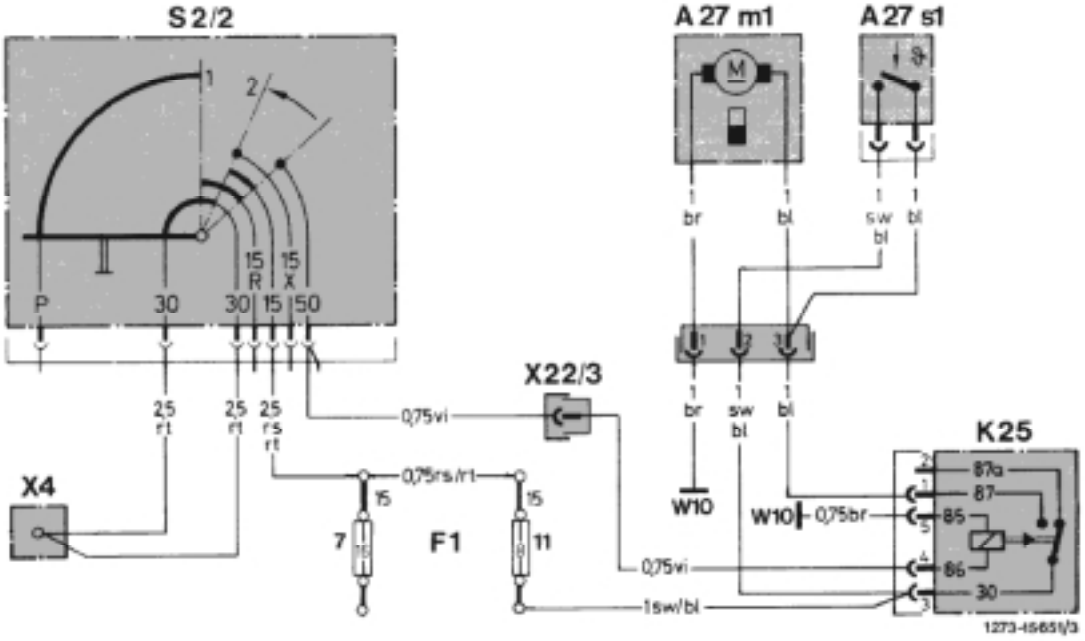

Wiring diagram

A27m1	Fan motor	K25	Relay fan motor (transmission oil)
A27s1	Temperature switch 100 °C	S2/2	Glow starter switch
F1	Fuse/relay box	W10	Ground, battery
	Fuse 7 (input end) terminal 15	X4	Terminal block/terminal 30
	Fuse 11 (input end) terminal 15		Fuse/relay box
	Fuse 11 (output end) terminal 15	X22/3	Connector transmission-cooling, 1-pin

Parts required for installation are shown in the following spare parts data:

Scope of delivery	ET fiche Group 50

Available from: Plant 50 (PEW Sindelfingen)

Copyright DaimlerChrysler AG 29.01.2003 CD-Ausgabe G/05/02 Will not be recorded by Modification services

Diagnostic trouble code (DTC)	Possible cause	Test step/Remedy [1]
1	No faults recognized. In case of complaint:	ETP (entire test)
2	4MATIC control module (N30/3)	N30/3
3	Stop lamp switch (4-pole) (S9/1)	ETP ⇒ 8.0, 9.0
4	Left front axle VSS sensor (L6/1)	ETP ⇒ 13.0
5	Right front axle VSS sensor (L6/2)	ETP ⇒ 14.0
6	Rear axle VSS sensor (L6)	ETP ⇒ 15.0
7	Axle VSS sensors (L6, L6/1, L6/2) or ABS control module (N30)	Check wiring for open circuit, Check N30.
8	Overvoltage protection relay module (87E/87L/30a, 9-pole) (K1/2) or front axle drivetrain valve (A7/2y1) or central differential lock valve (A7/2y2)	ETP ⇒ 1.0, 2.0, 16.0, 17.0, 19.0, 20.0
9	Overvoltage protection relay module (87E/87L/30a, 9-pole)(K1/2), central differential lock valve (A7/2y2) or rear axle differential lock valve (A7/2y3) or stop lamp switch (4-pole) (S9/1)	ETP ⇒ 1.0, 2.0, 8.0, 9.0, 16.0, 17.0, 18.0, 19.0, 20.0
10	Overvoltage protection relay module (87E/87L/30a, 9-pole)(K1/2) or rear axle differential lock valve (A7/2y3) or stop lamp switch (4-pole) (S9/1)	ETP ⇒ 1.0, 2.0, 8.0, 9.0, 18.0, 20.0
11	Overvoltage protection relay module (87E/87L/30a, 9-pole)(K1/2) or steering angle sensor (N49)	ETP ⇒ 1.0, 2.0, 10.0, 11.0, 12.0

ZOOM SIZED FOR PRINT

1) Observe Preparation for Test, See: Test Programs (ETP, HTP, MTP)\ETP (Electrical Test Program)\Preparation For Test

Mercedes-Benz

Driving Dynamics Systems: ASD, ASR and 4MATIC™

Overview

This guide describes ASD, ASR and 4MATIC™ driving dynamics systems. They have been created by Mercedes-Benz to augment control of the car in less-than-ideal road conditions by efficiently distributing engine torque and enhancing traction.

Electronically and hydraulically controlled, these systems function automatically; you do not have to activate *anything*. And they are designed to function only when needed–when marginal surface conditions cause some loss of traction. It is important to remember, however, that these systems are not intended for off-road use.

The engineers of Mercedes-Benz have spent years refining these systems. Not only do they react automatically, they react almost instantly–far faster than any person ever could.

We urge you to turn to the section that describes the system in your Mercedes-Benz, and read it carefully.

Three highly advanced drivetrain systems that react automatically to provide increased traction coupled with sure, stable handling.

Please note: The engineers of Mercedes-Benz have done everything that current technology allows to provide you with the most sophisticated driving systems available today. However, no system, no matter how sophisticated, can repeal the laws of physics or overcome careless driving actions. Please make it your responsibility to operate your car in a safe and prudent manner at all times.

ASD Automatic Locking Differential

An automatic, computer-controlled locking differential for four-cylinder, manual-shift and diesel models.

When one of an automobile's driven wheels starts to slip, its torque is energy wasted. This can be problematic when you need to start or accelerate on a wet, slick or gravel-covered surface.

The Mercedes-Benz ASD system was created chiefly to improve start-up and low-speed accelerative traction. The ASD system detects wheelslip in one of the driven wheels and alerts the driver via a lamp located in the speedometer.

In addition, up to a speed of about 19 mph, ASD will instantly shift much of the slipping wheel's unused torque to the other driven wheel. It does this by means of a locking differential. Although this concept is in some ways comparable to the conventional mechanical limited-slip differential, the ASD system is far more advanced.

With ASD, the locking action of the differential can be up to 100 percent. When traction improves, the ASD system disengages–automatically and virtually instantly–and the automobile returns to its normal drive mode, with motive power equally distributed between the two driven wheels.

To ensure that braking will never be impeded, the ASD system is designed to disengage the instant you apply the brake pedal. Full braking stability is always retained, and the ABS Antilock Braking System remains fully functional.

When the speed is above 19 mph, ASD will no longer lock the differential. At higher speeds, a fully or substantially locked differential may impede cornering. But the system's basic limited-slip function–up to 35 percent–remains available.

To warn you of slippery conditions at any speed, the monitor lamp mounted in the speedometer will illuminate whenever acceleration causes rear-wheelslip, reminding you to adapt your driving style to the prevailing conditions.

Maintenance requirements: Your ASD system should be maintained and serviced only by an authorized Mercedes-Benz service professional. For recommended service of the ASD system, see your Owner's Manual.

Please note: When the indicator light is on, traction has diminished. Modify your driving behavior.

ASR Mercedes-Benz Automatic Slip Control

Slick pavement, gravel and tight cornering are but a few of the causes of wheelslip. Automatically controlling such wheelslip during acceleration throughout a car's operating range is the function of ASR.

At speeds under approximately 24 mph: If one driven wheel slips, its brake is applied until traction is regained. Should the slippage continue, the braking is accompanied by a throttling back of the engine until wheelslip disappears.

At speeds above approximately 24 mph: The above sequence is reversed. If the sensors detect slippage in one driven wheel, the engine is throttled back until the slippage no longer occurs. Should this not be enough to correct the situation, the slipping wheel is braked until traction is regained. This is also how the ASR system responds when slippage is detected in both driven wheels, regardless of the vehicle's speed.

Through curves at speeds between 12 mph and 75 mph: The ASR system monitors the sharpness of the curve and, when necessary, will throttle back the engine to achieve the proper degree of traction.

The ASR system incorporates an accelerator that evaluates conditions and reduces engine rpm when necessary–regardless of pedal position. This aims to maximize tire-to-road adhesion, even in difficult driving conditions. And should you move abruptly from the brake to the accelerator, the same computer monitors power distribution to help reduce slippage.

If you apply the brakes, the ASR system will immediately disengage and full ABS antilock braking function will be retained in each wheel.

A limited amount of driven wheelslip is advantageous when using snow chains, due to their unique traction characteristics. An ASR "snow chain" rocker switch in the center console can be activated when snow chains are installed, to permit a higher–but limited–degree of wheelslip. This switch is effective only at speeds below 24 mph; it will automatically

An automatic, computer-controlled antislip acceleration system for six- and eight-cylinder gasoline-engine models with automatic transmissions.

disengage at higher speeds.

The ASR system has a function monitor lamp in the speedometer to indicate when the system is engaged. It will remain illuminated as long as the system is actively controlling wheelslip, and you should adapt your driving style accordingly to suit the road conditions.

Maintenance requirements: Your ASR system should be maintained and serviced only by an authorized Mercedes-Benz service professional. See your Owner's Manual for the recommended maintenance schedule.

Please note: When the indicator light is on, traction has diminished. Modify your driving behavior.

4MATIC All-Wheel-Drive Traction System

The Mercedes-Benz 4MATIC all-wheel-drive system available in the 1991 300E 4MATIC Sedan and the 300TE 4MATIC Station Wagon is a fully automatic, electronically and hydraulically controlled traction system designed to function only when it is needed–that is, when a road surface is slippery enough to cause some loss of traction.

In normal circumstances, the Mercedes-Benz 4MATIC system is not engaged. Power from the engine is channeled to the two rear wheels just as it would be in any current Mercedes-Benz passenger car without 4MATIC.

Should the 4MATIC system detect either an impending loss of traction or of driving stability–for example, during certain sharp turns–it responds by distributing power to the front wheels as well. This occurs automatically, instantly, and so smoothly it is unlikely that you will notice the transition.

It is important that the driver be fully aware of deteriorating traction conditions, even as 4MATIC is helping to provide the best possible traction under the circumstances. Thus, when the system engages, an indicator lamp–a yellow triangle outlined in black with a black exclamation point inside–glows prominently from the center of the speedometer. This indicator will also momentarily light when you turn the ignition to position two.

Viewed in its entirety, a vehicle fitted with the 4MATIC system has four levels of forward drivetrain engagement, beginning with simple rear-wheel drive. All-wheel drive engages in this order of escalating response:

1. All-wheel drive with torque split in a ratio of 35:65 front to rear.
2. All-wheel drive with torque split 50:50 front to rear.
3. All-wheel drive with torque split 50:50 front to rear and the rear differential locked.

This maximum level of engagement can occur only at fairly low forward speeds.

Starting and accelerating: When accelerating forward from a standing position, the 4MATIC system always engages the first level of all-wheel drive until a speed of approximately 12 mph is reached. The lamp will not illuminate in this instance. Under hard acceleration, or under acceleration where some wheelslip might occur–for example, driving up a steep incline–all-wheel drive remains engaged until the driver backs off the accelerator significantly.

Cornering: In a sharp turn, a sudden change in the steering angle or in a tire's adhesion to the road can cause a car to deviate from its intended path. In both cases, 4MATIC will engage either the first or the next level of all-wheel drive, helping the car "pull" itself through the turn by adding front-wheel tractive force.

Computerized, fully automatic all-wheel drive for the 300 E and 300 TE.

Traction loss: When the rear wheels begin to slip relative to the front wheels–as occurs on ice, snow, sand, gravel, mud, or when the wheels hydroplane–the first or the next level of all-wheel drive is engaged.

Once engaged, any level of all-wheel drive remains engaged until the condition which caused it diminishes significantly. The 4MATIC system is programmed to disengage in stages, on the theory that more than enough traction is preferable to less than enough.

Note that rear-wheel drive is always engaged. Once disengaged, all-wheel drive is again instantly engaged should traction conditions worsen. If a cycle of engagements and disengagements occurs in a specified interval, the length of time all-wheel drive is engaged is automatically prolonged.

Above 30 mph, braking with 4MATIC engaged causes the system to instantly revert to rear-wheel drive. Below 30 mph, the system reverts to the first stage (35:65). Thus, antilock braking (ABS) effectiveness is maintained.

Maintenance requirements: Your 4MATIC system should be serviced only by trained technicians at your authorized Mercedes-Benz dealer. The recommended service intervals for 4MATIC system inspections and fluid changes duplicate those established for your automatic transmission. Please see your Owner's Manual.

Please note: When the indicator light is on, traction is diminished. Modify your driving behavior.

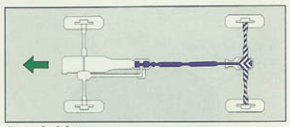

Rear-wheel drive

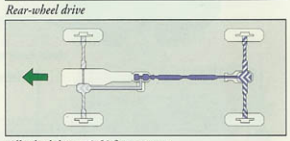

All-wheel drive 35:65 front to rear

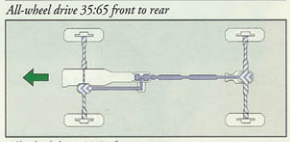

All-wheel drive 50:50 front to rear

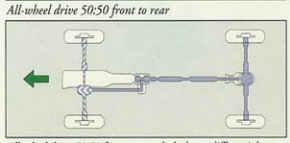

All-wheel drive 50:50 front to rear, locked rear differential

4MATIC All-Wheel Drive

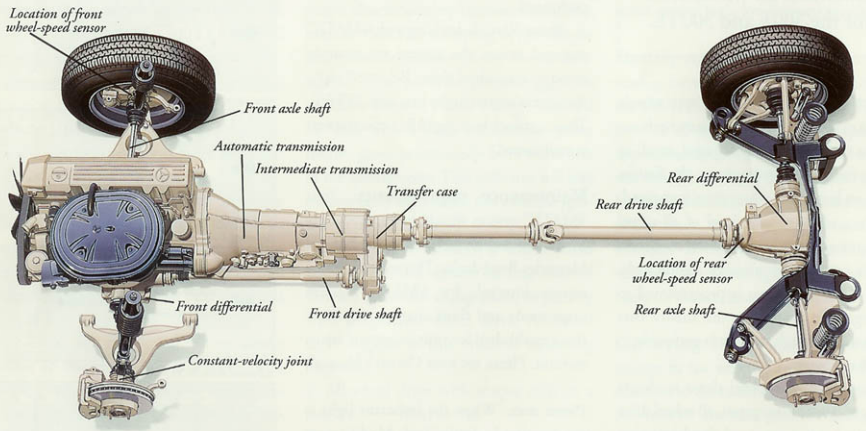

Mercedes-Benz of North America, Inc.
One Mercedes Drive
Montvale, New Jersey 07645

©1990 Mercedes-Benz of North America, Inc.
Marketing Communications
MC-90-955-50

Printed in the United States

All illustrations and specifications contained in this folder are based on the latest product information available at time of publication approval. Mercedes-Benz reserves the right to make changes at any time, without notice.

27-110 Adjusting cable for control pressure

Operation number of the operation texts and work units or standard texts and flat rates:
27-1250

Adjusting

M

The engine throttle control must be correctly adjusted.

Vehicles with engines 103 and 603.96

1 Detach ball socket (19) and pull control pressure cable forwards until slight resistance can be felt. In this position, hold the ball socket over the ball head and attach; if necessary, adjust by means of the adjusting screw (15).

Engine 103.98

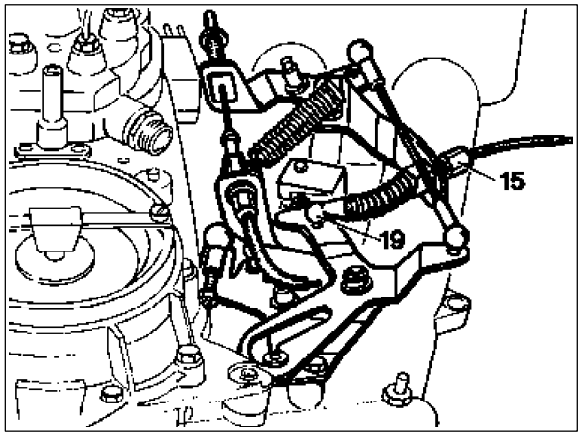

P27-0006-13<

Engine 603.96

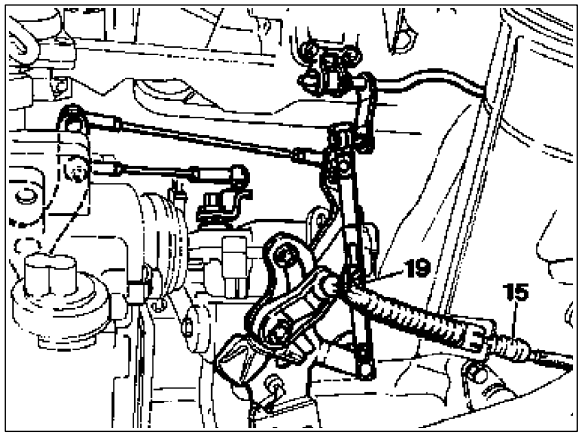

P27-5314-13

Copyright DaimlerChrysler AG 31.03.2007 CD-Ausgabe G/05/05 . This WIS print-out will not be recorded by Modification services.

Vehicles with engines 116 and 117

1 Remove air cleaner.

2 Slacken clamping screw (6) on connecting rod (8).

3 Extend connecting rod (8) and compress again until slight resistance can be felt. Then tighten clamping screw (6).

4 Refit air cleaner.

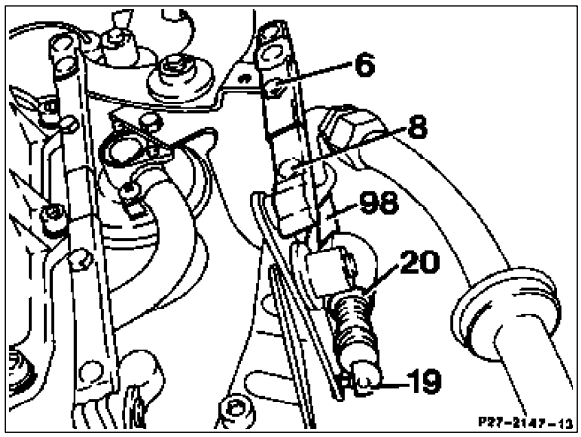

P27-2147-13

Vehicles with engine 104

1 Remove air cleaner.

2 Control pressure cable attached. Adjust control pressure cable (98) by turning adjusting screw (15) until the tips of the needles are in alignment.

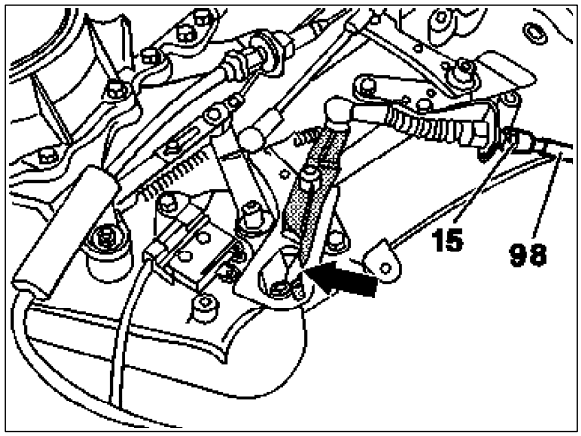

P27-5233-13

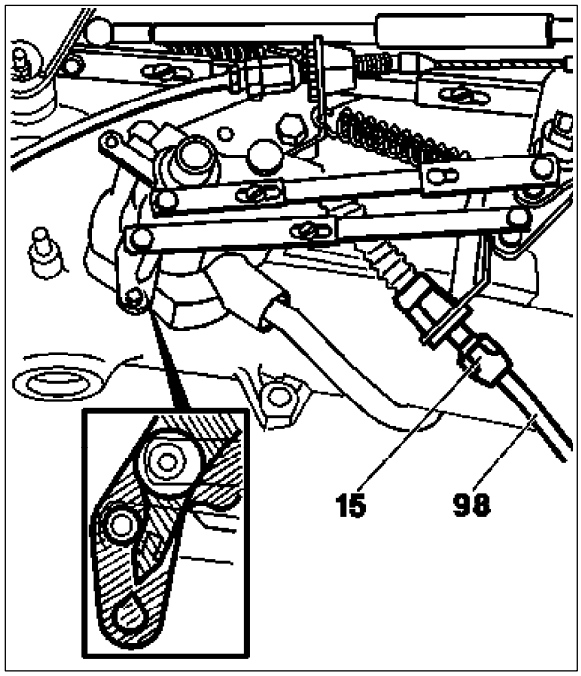

Engine 104 with electronic accelerator pedal

P27-5310-15

Copyright DaimlerChrysler AG 31.03.2007 CD-Ausgabe G/05/05 . This WIS print-out will not be recorded by Modification services.

Vehicles with engine 119

1 Remove air cleaner.

2 Turn adjusting screw (15) on bowden cable (98) until the pointer of the spacer sleeve (17) aligns with the adjusting screw.

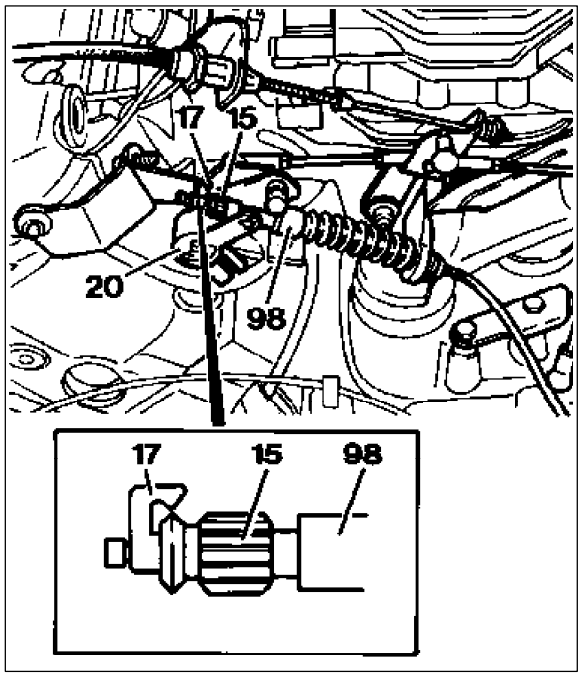

P27-5311-15

Vehicles with engine 119.97

1 Remove air cleaner.

2 Slacken hexagon nuts (6) on connecting rod (8).

3 Turn connecting rod (8) until the tips of the needles are in alignment.

4 Tighten hexagon nuts (6).

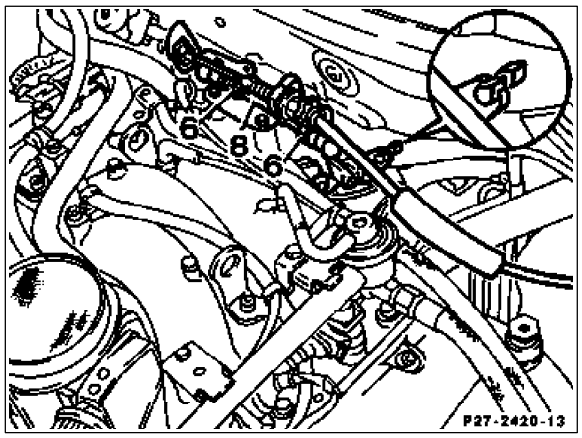

P27-2420-13

Engine 120

Remove air cleaner. Turn adjusting screw (15) to adjust control pressure cable (98) until the tips of the needles are in alignment.

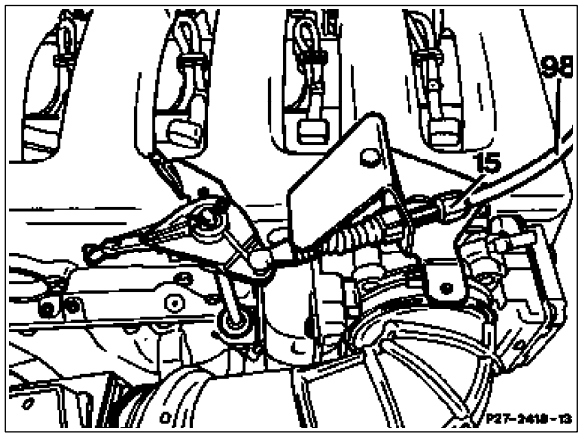

P27-2418-13

Copyright DaimlerChrysler AG 31.03.2007 CD-Ausgabe G/05/05 . This WIS print-out will not be recorded by Modification services.

27-115 Removing, installing and adjusting control pressure cable with vacuum actuator

Operation number of the operation texts and work units or standard texts and flat rates:
27-6820

A. Vehicles with program selector switch

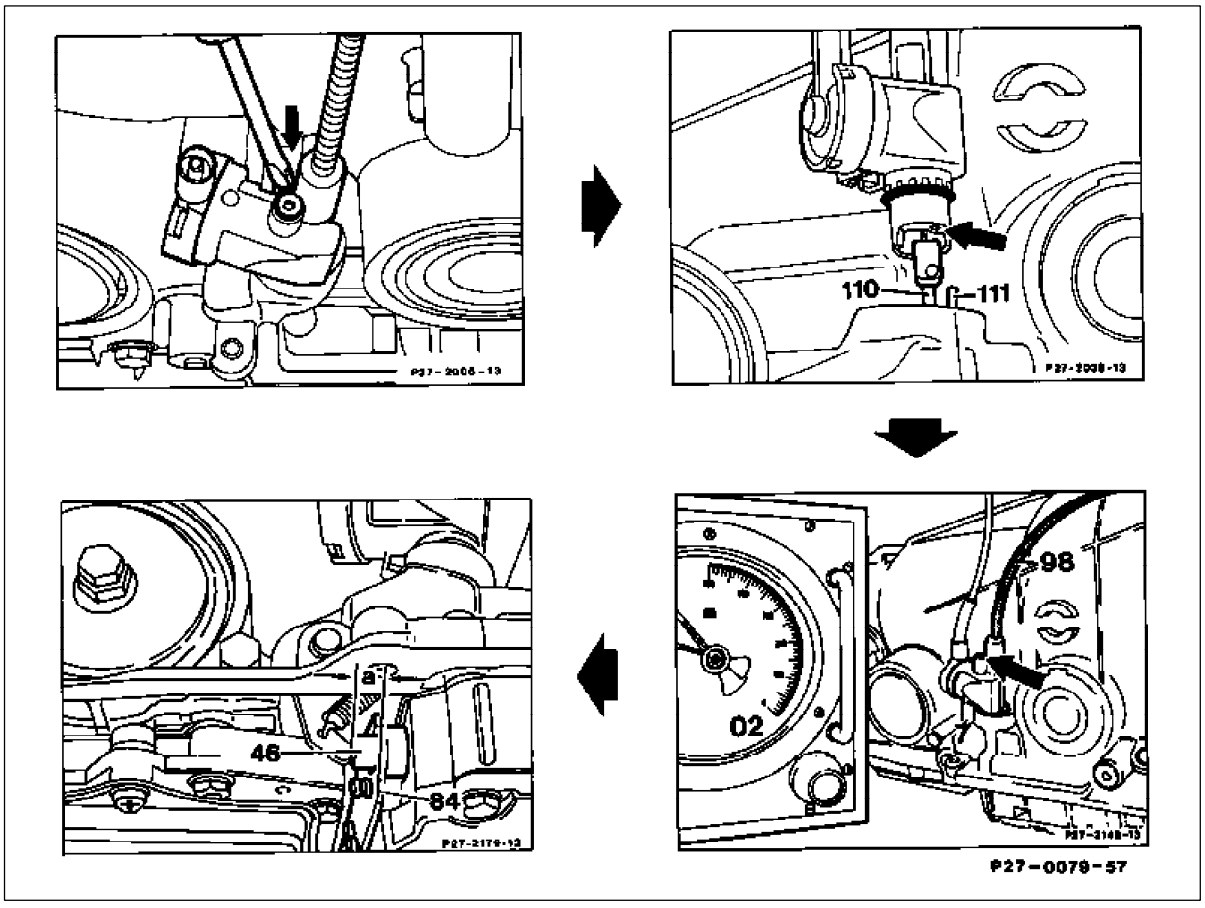

P27-0079-57

Note

On model 201 the control pressure cable with vacuum actuator can only be replaced with the transmission removed.

Control pressure cable lock (arrow) _____ Unscrew with a screwdriver and detach from connecting rod (110). Remove transmission oil pan to install. Hook connecting rod (110) onto control pressure cable (98). Feed limiting rod (111) into bore (arrow) and insert control pressure cable. Rotate control pressure cable until lock engages.

Copyright DaimlerChrysler AG 31.03.2007 CD-Ausgabe G/05/05 . This WIS print-out will not be recorded by Modification services.

Tester (02) 201 589 13 21 00 — Connect to vacuum actuator and apply vacuum.
Pull control pressure cable as far as full-load stop.

Distance "a" — Measure between front face of control pressure valve (46) and closure plate (84).
Specified value: 8 mm on 4-cylinder engines
6 mm on 6-cylinder engines.
Adjust distance "a" as necessary with hexagon socket bolt (arrow).

Test step Scope of test	Test connection: Tester	Operation/ Requirement	Specified value	Possible cause/remedy
Checking vacuum at vacuum actuator for control pressure cable	Connect vacuum tester with Y-piece to vacuum actuator of control pressure cable	Engine at idle, Program selector switch at position "E"	Approx. 400 mbar	Transmission mode switchover valve (Y4) Transmission mode switch (S16/5) Vacuum line
		Position "S"	0 bar	

Special tool

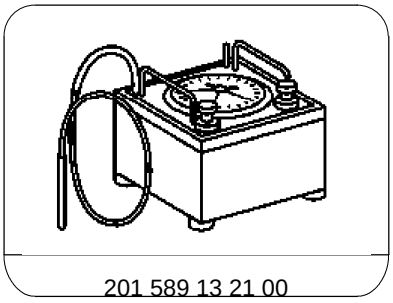

201 589 13 21 00

Note
Phased in as of 07/93, a standardized control pressure cable has been fitted in the body.

The control pressure cable with 2 vacuum actuators in the plastic housing is also used for the transmission which does not need the two vacuum actuators.

The upshift delay vacuum actuator (8) should be sealed with a blind plug (5) to prevent contamination. The vent connection is to be provided with a cap (6).

5 Blind plug
6 Cap
7 Vacuum actuator with selector program
8 Vacuum actuator with upshift delay

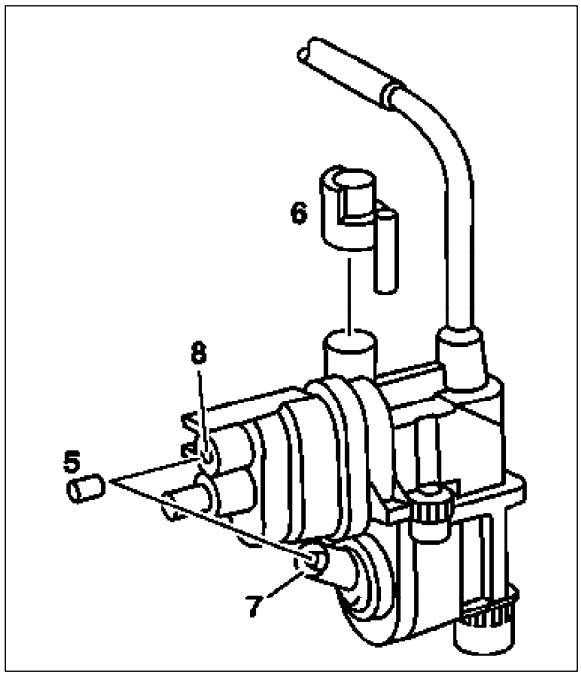

P27-5241-15

Copyright DaimlerChrysler AG 31.03.2007 CD-Ausgabe G/05/05 . This WIS print-out will not be recorded by Modification services.

27-550 Removing and installing transmission air-oil cooler with blower (models 124/140)

Operation number of the operation texts and work units or standard texts and flat rates:
27-9100

Note
The transmission air-oil cooler with blower is only required in vehicles with air conditioner or automatic climate control and trailer coupling if the trailed load amounts to over 1500 kg gross vehicle weight.

Removing and installing

1 Remove front bottom section of noise encapsulation.

2 Seal off oil hoses (32, 33) on oil lines (19, 20). Remove clamp (22).

Installation note
Check and correct transmission oil level of automatic transmission (see Maintenance Manual, volume 2, op. no. 2710). Fit rubber grommet (34).

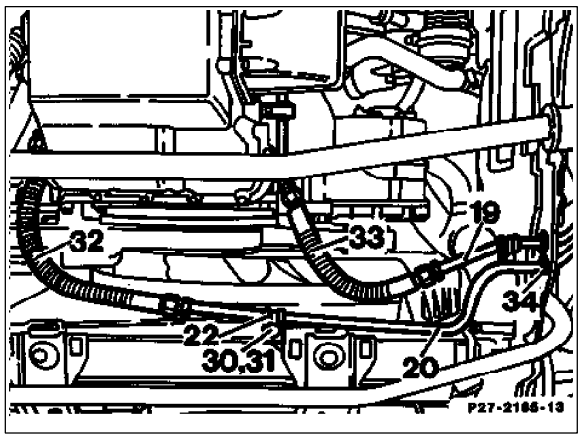

P27-2185-13

19 Oil line
20 Oil line
22 Clamp
30 Nut M6
31 Bolt M6x16
32 Oil hose
33 Oil hose
34 Rubber grommet

3 Unscrew bolts (25, 29) and nuts (27, 28), remove covering (26).

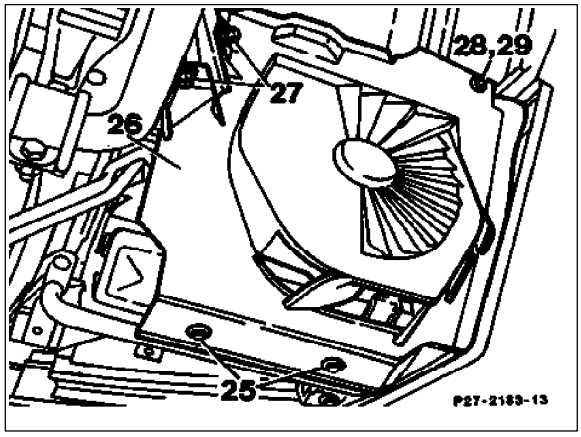

P27-2183-13

25 Bolt M6x12
26 Covering
27 Plastic nut
28 Metal nut
29 Bolt B6.3x16

Copyright DaimlerChrysler AG 29.01.2003 CD-Ausgabe G/05/02 Will not be recorded by Modification services

4 Unscrew nuts (23).

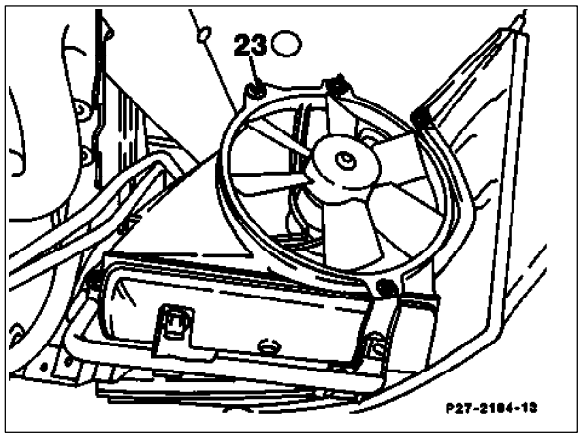

P27-2184-13

5 Unscrew bolts (24), then drain air-oil cooler with blower and blower housing a little and disconnect 3-pin plug connection.

6 Remove complete air-oil cooler.

24 Bolt M6x16

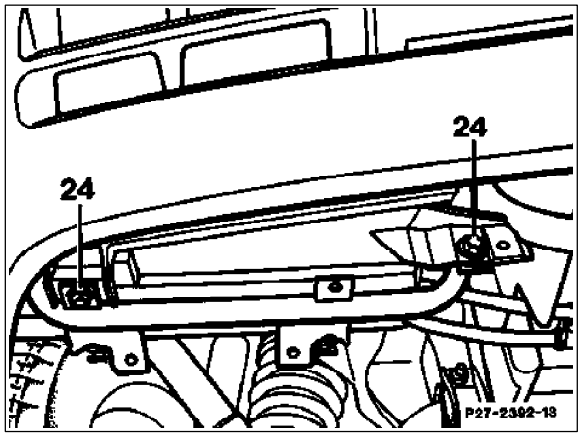

P27-2392-13

7 Unscrew blower housing (12) with blower (13).

12 Blower housing
13 Blower
14 Metal nut
15 Bolt B4.8x16
16 Plug
17 Connector
18 Clamp
19 Oil line
20 Oil line
21 Bolt M6x16
22 Clamp

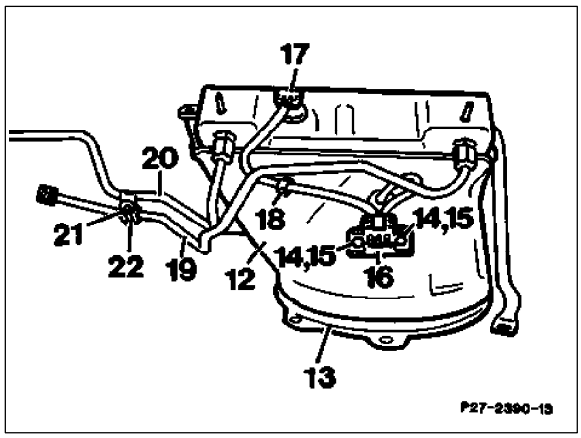

P27-2390-13

Copyright DaimlerChrysler AG 29.01.2003 CD-Ausgabe G/05/02 Will not be recorded by Modification services

8 Check air-oil cooler (8) for damage and leaks. Check temperature switch (10).

Note
The temperature switch may also be checked and replaced with the oil cooler in situ. To do this, the headlamp must be removed.

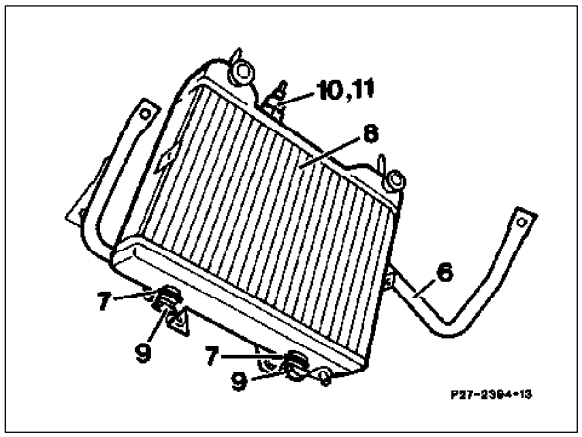

P27-2394-13

6 Retaining bracket
7 Rubber grommet
8 Oil cooler
9 Clip
10 Temperature switch
11 Sealing ring

Note
Retrofitting is described in volume 3 of Special Equipment. Parts are listed in the parts microfilm for Group 50.

Installation survey of transmission air-oil coolers 1)

Model	As standard	Special equipment, in conjunction with air conditioner and trailer coupling
124.133/193	-	X
124.034	-	X
140.042/0432)	-	X
140.050/0512)	-	X
140.056/057	X	-
140.134	X	-

1) Except I H .
2) Not as from 06/93

Copyright DaimlerChrysler AG 29.01.2003 CD-Ausgabe G/05/02 Will not be recorded by Modification services

27-600 Removing and installing transmission with torque converter

Operation number of the operation texts and work units or standard texts and flat rates:
27-2010

A Vehicles without 4MATIC

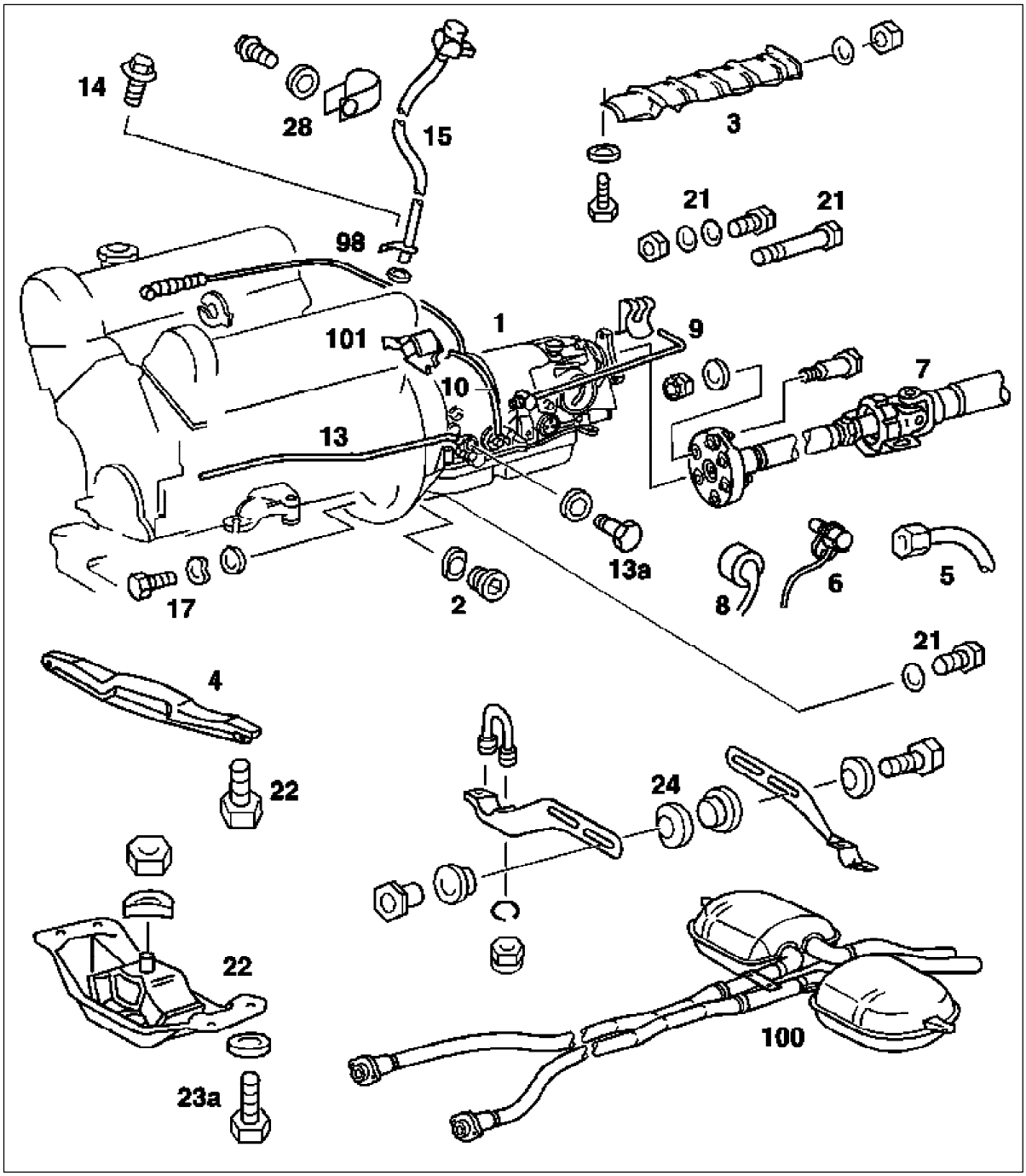

P27-5347-61

Copyright DaimlerChrysler AG 09.07.2007 CD-Ausgabe G/05/05 . This WIS print-out will not be recorded by Modification services.

Negative cable on battery	Disconnect, connect.
Bracket (28)	Unscrew, screw on to cylinder head.
Control pressure cable (98)	Push off ball socket, if necessary detach locking device (20). Remove, hook in cable (item 3). After repair adjust control pressure cable.
Transverse yoke center assembly (4)	Unscrew, screw on. Replace self-locking hexagon bolts. Tightening torque 45 Nm (item 4).
Connecting member (5)	Remove, install (item 5).
Oil	Drain from transmission and torque converter. Fill with oil after repairs, check and correct oil level (see Maintenance Manual, op. no. 2710). Oil pan drain plug 14 Nm, converter 16 Nm.
Hexagon bolts for torque converter driver plate	Unscrew, screw in, tightening torque 42 Nm.
	M
	Observe direction of rotation of engine
Support engine and	Remove, install exhaust system (100) (item 9).
Rear engine mount with cross member (22)	Remove, install (10) (item 10).
Cable for kickdown solenoid valve (6); if necessary, cable for shift point retard, and pulse generator or speedometer shaft	Detach, attach (item 11).
Side exhaust support (24)	Remove, install complete.
Exhaust shielding plate (3)	Remove, install.
Propeller shaft clamping nut (7)	Slacken, tighten, tightening torque 30-40 Nm.
Propeller disc (25)	Unscrew, screw on at transmission.
Plug for starter lockout switch (8)	Press off, press on; turn locking device upwards (item 15).
Shift rod (9)	Detach, attach at range selector lever.
Vacuum line (10)	Disconnect, connect (item 17).
Oil cooler feed and return lines (12, 13)	Disconnect, connect (item 18).
Oil filler pipe (15)	Push out, push in (item 19).
Transmission (1)	Unscrew, screw in all hexagon bolts, as well as 2 nuts in vehicles with 8-cylinders engine. Tightening torque M10=55 Nm, M12=65 Nm. Raise transmission using tool 140 589 02 62 00. Push transmission with torque converter out/in horizontally (item 22).
Torque converter	Remove, install (item 23).
Installed height of torque converter in transmission housing	Check, (item 24).
Transmission housing	Check, (item 25).

Copyright DaimlerChrysler AG 09.07.2007 CD-Ausgabe G/05/05 . This WIS print-out will not be recorded by Modification services.

Torque converter	_____	Flush out with ATF oil (item 27).
Oil cooler with lines	_____	Flush out with ATF oil (item 29).
Correct transmission oil level	_____	See Maintenance Manual item 2710.

Special tools

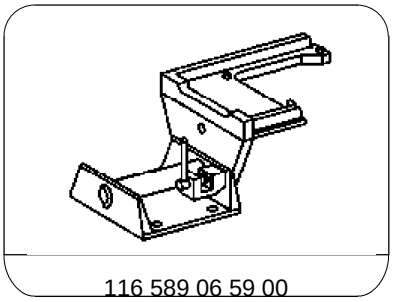

116 589 06 59 00

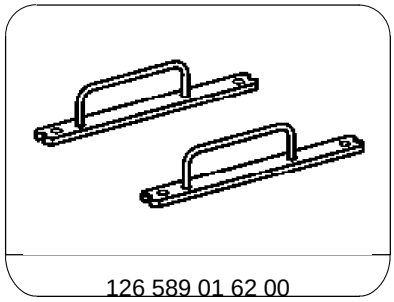

126 589 01 62 00

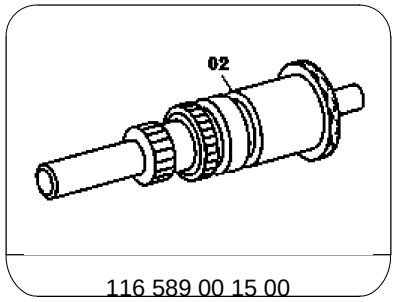

116 589 00 15 00

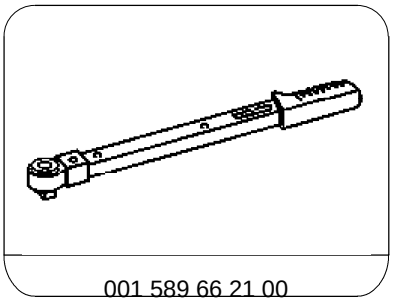

001 589 66 21 00

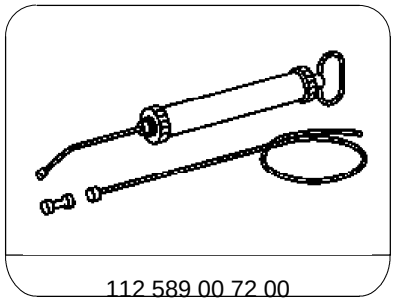

112 589 00 72 00

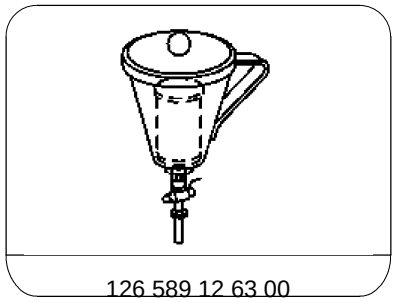

126 589 12 63 00

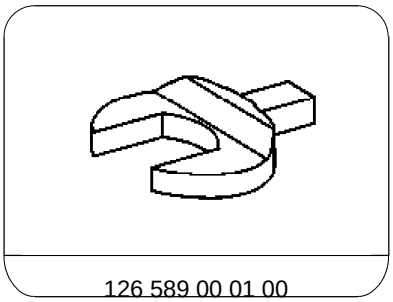

126 589 00 01 00

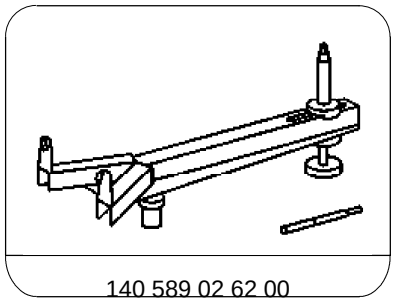

140 589 02 62 00

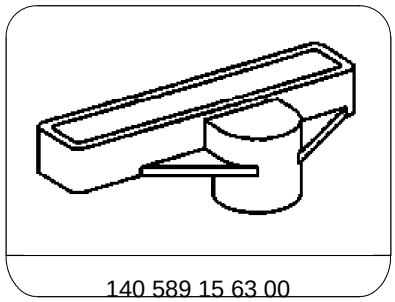

140 589 15 63 00

Copyright DaimlerChrysler AG 09.07.2007 CD-Ausgabe G/05/05 . This WIS print-out will not be recorded by Modification services.

The removal/installation tool 116 589 06 62 00 can also be used for model 140 if the adjustment range for the rear mount is increased.

The existing oblong hole must be lengthened from 95 mm to 110 mm and the milled contact surfaces at top and bottom must be enlarged from 165 mm to 180 mm.

After this modification, the removal/installation tool should be stamped with the new part no. 140 589 02 62 00.

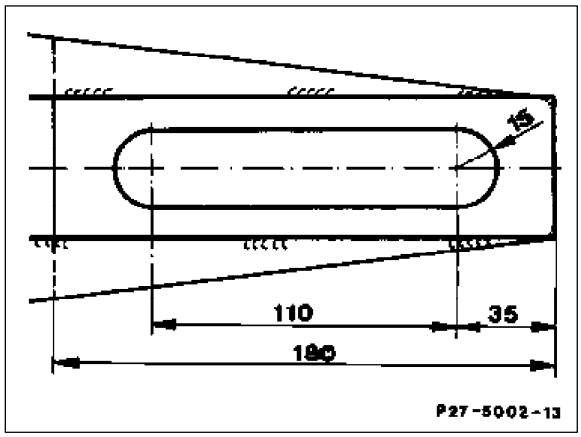

P27-5002-13

Types of oil

Transmission fluid (ATF) Approved oils	See Specifications for Service Products	
Filling quantities in liters		
Models with	First filling	Oil change
6-cylinder engines	7.3	6.2
8-cylinder engines	8.6	7.7

Removing and installing

1 Disconnect negative cable from battery.

2 Disconnect longitudinal engine throttle control shaft.

3 Unhook control pressure cable (98).

In vehicles with engines 116 and 117, pull out circlip (20) and control cable.

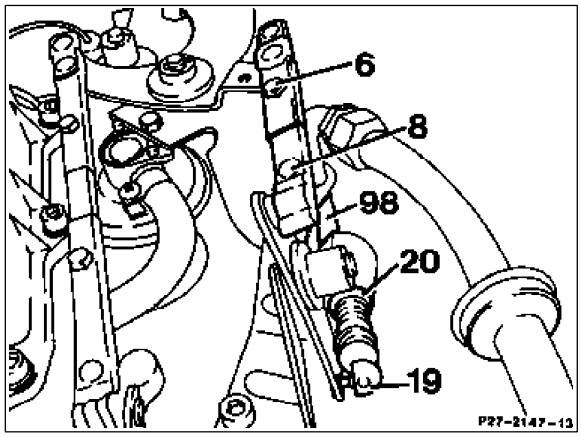

P27-2147-13

Vehicles with engines 103 and 104

Compress both lugs on the plastic clip (18) with pliers and pull out the cable in the direction of the arrow.

Installation note

Adjust control pressure cable (27-110).

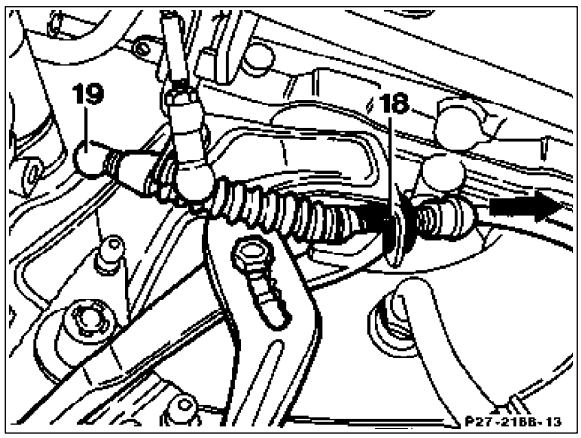

P27-2168-13

Copyright DaimlerChrysler AG 09.07.2007 CD-Ausgabe G/05/05 . This WIS print-out will not be recorded by Modification services.

4 Unscrew transverse yoke center assembly (4).

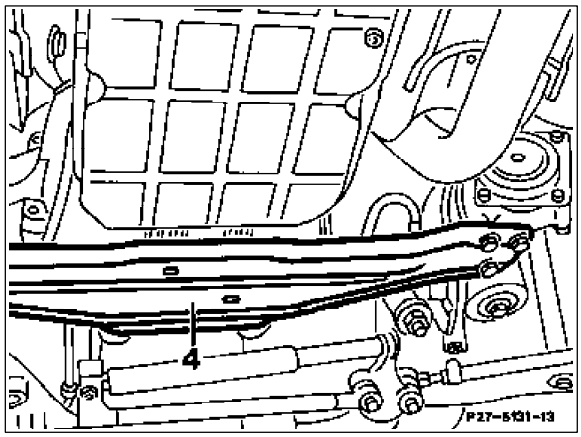

P27-5131-13

5 Remove/install connecting member (5), model 124.036.

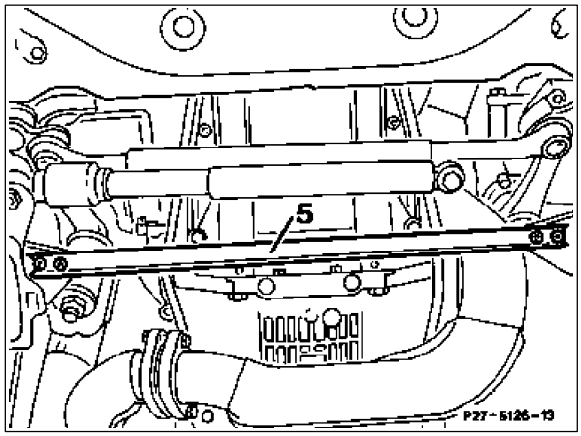

P27-5126-13

6 Unscrew drain plugs (1 and 2) and drain oil.

Installation note
Tightening torque, oil pan 14 Nm, converter 16 Nm.

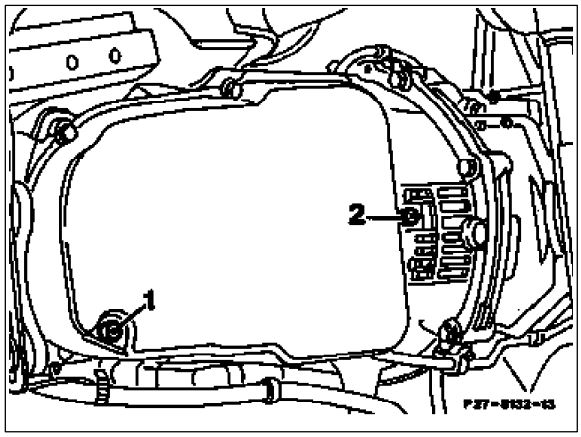

P27-5132-13

7 Unscrew bolts (17) for driver plate of torque converter (total of 6 bolts).

Installation note
Tightening torque 42 Nm.

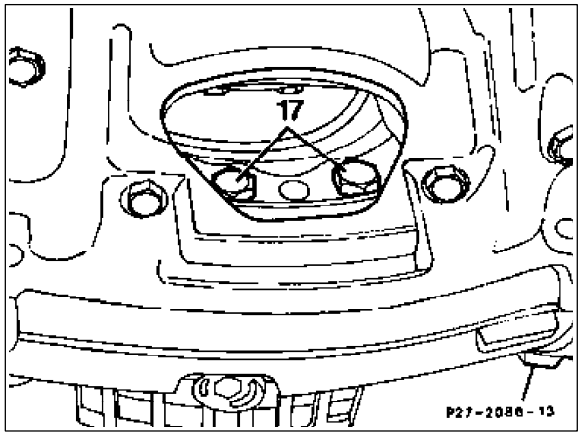

P27-2086-13

Copyright DaimlerChrysler AG 09.07.2007 CD-Ausgabe G/05/05 . This WIS print-out will not be recorded by Modification services.

On engines 117 and 119

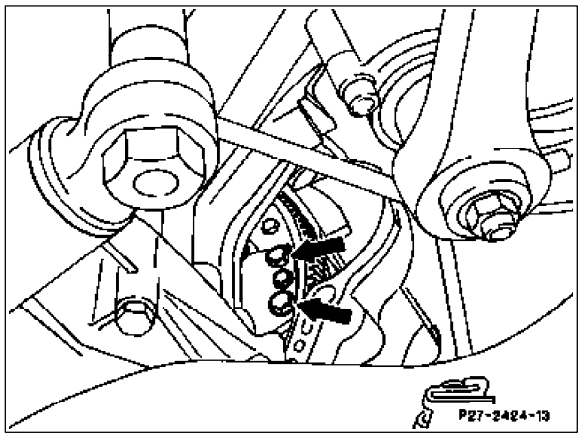

P27-2424-13

8 Insert a suitable wooden wedge (arrow) between engine oil pan and transverse yoke.

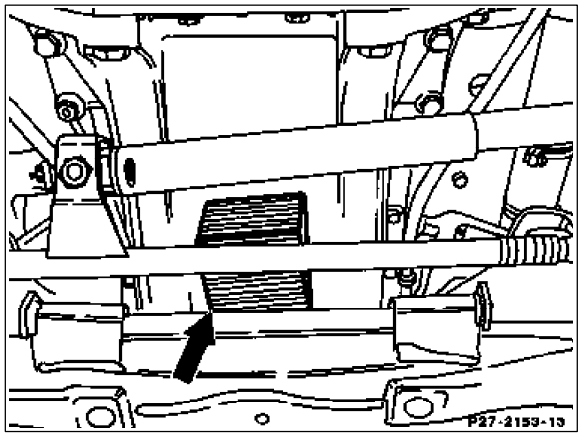

P27-2153-13

9 Remove entire exhaust system assembly.

10 Remove cross member (22) with rear engine mount.

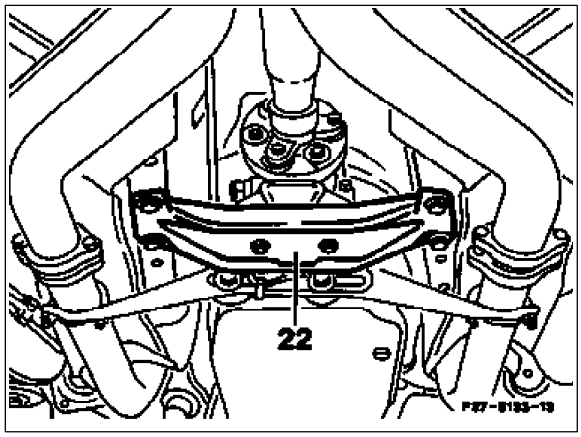

P27-5133-13

11 Release cable strap (23) and unscrew cable (6) on kickdown solenoid valve (61). Unscrew retaining bolts for pulse generator (arrow) and pull out pulse generator.

Note
On vehicles with mechanical speedometer, disconnect shaft. On vehicles with catalytic converter heating, disconnect cable for shift point retard.

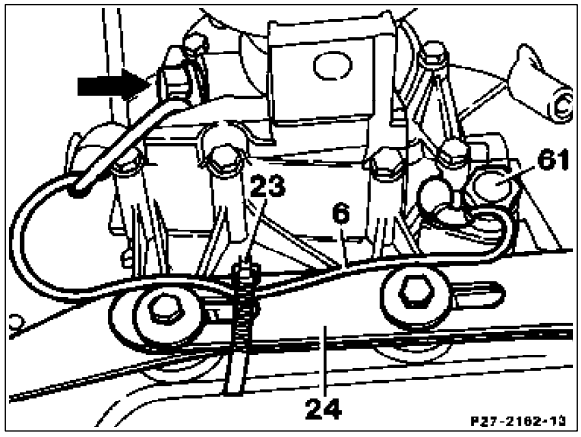

P27-2162-13

Copyright DaimlerChrysler AG 09.07.2007 CD-Ausgabe G/05/05 . This WIS print-out will not be recorded by Modification services.

12 In vehicles with 8-cylinder engines, disconnect plug for upshift delay cable (X22/7).

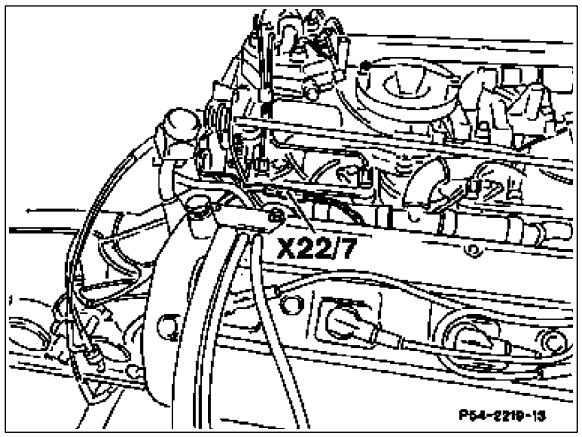

P54-2219-13

13 Slacken propeller shaft clamping nut (7).

Installation note
Tightening torque 30-40 Nm.

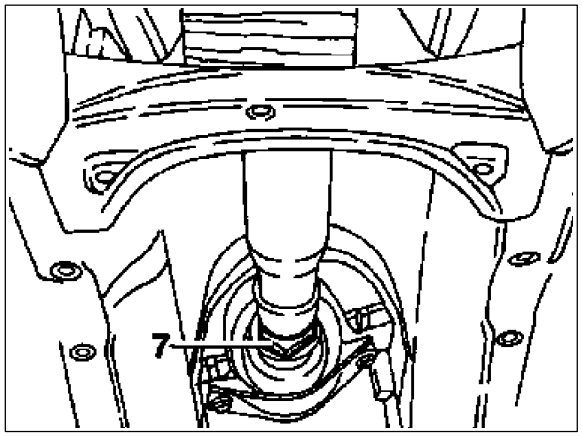

P27-2166-13

14 Unscrew propeller disc at transmission.

15 Remove plug for starter lockout switch (8).

M

The plug is secured by a locking device. The locking device must be turned upwards (arrow) before the plug can be disconnected.

16 Unhook shift rod from range selector lever.

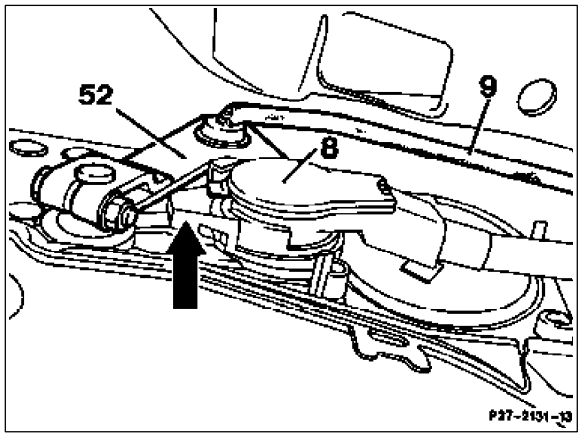

P27-2131-13

17 Disconnect vacuum lines for vacuum box (white), mode program (red) and shift point retard (black/green).

Copyright DaimlerChrysler AG 09.07.2007 CD-Ausgabe G/05/05 . This WIS print-out will not be recorded by Modification services.

18 Unscrew oil cooler feed and return lines (12 and 13).

Installation note
Replace sealing rings.

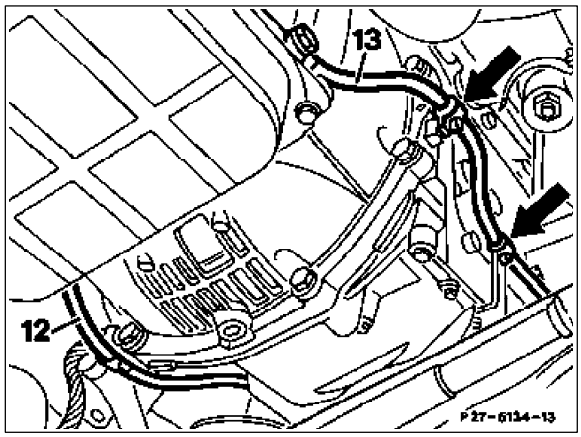

P27-5134-13

19 Unscrew bolt (14) and bracket on cylinder head for oil filler pipe (15) and push pipe upwards.

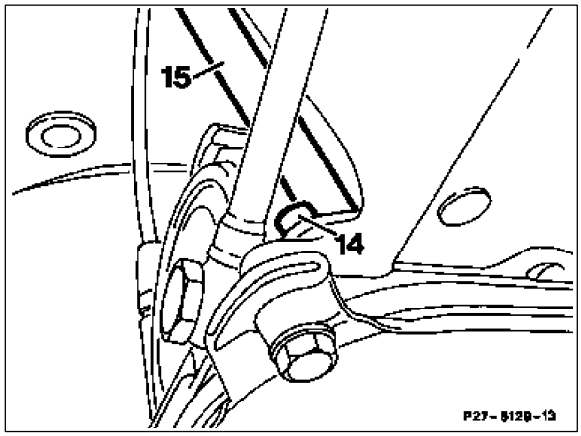

P27-5129-13

20 Unscrew all hexagon bolts holding the transmission, apart from the two bolts at the side.

Note
In 8-cylinder engines, two hexagon bolts (27) are replaced by stay pins with hexagon nuts.

21 Raise transmission using attachment 140 589 02 62 00 (60) for vehicle lift.

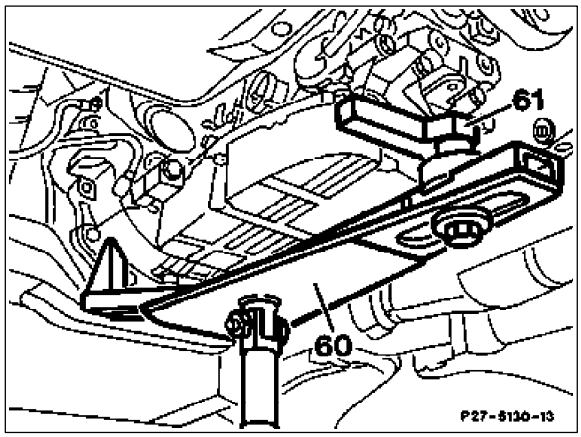

P27-5130-13

Copyright DaimlerChrysler AG 09.07.2007 CD-Ausgabe G/05/05 . This WIS print-out will not be recorded by Modification services.

22 Unscrew side bolts, push transmission towards the rear and lower carefully.

Installation note
Observe correct seating of plain dowel pins.
Raise transmission and push forwards at the height of the engine until the converter housing rests snugly.

23 Rotate plastic retaining pin (arrow) for torque converter in a counter-clockwise direction through 1/4 revolution using an 8 mm Allen wrench and remove. Bolt handles (065) to torque converter and lift out torque converter.

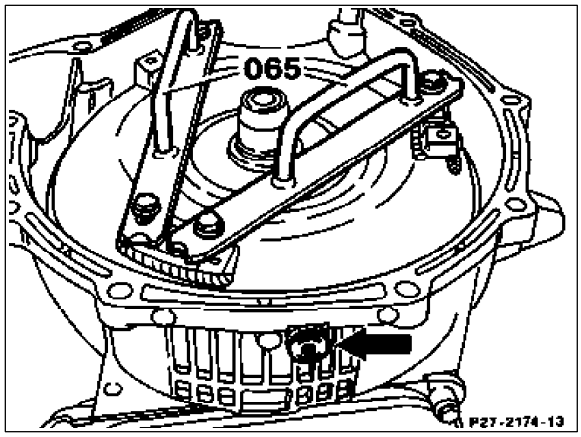

P27-2174-13

24 **Checking installed height of torque converter in transmission housing**

Using a depth gauge, measure the distance "A" between the transmission housing and converter fixing.

Engine	**Distance**
104	9,6 mm
119	29,8 mm
120	21,6 mm
All diesel engines	8,7 mm

M

If the torque converter is not correctly seated in the transmission housing, this causes irreparable damage to the torque converter and the primary pump.

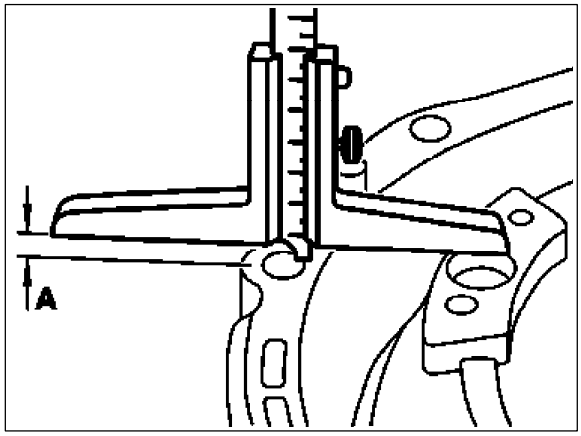

P27.20-0213-13

25 **Checking torque converter**

Excessive engine speeds which cause overspeed damage to the engine, can also result in permanent widening of the torque converter. This then fouls the primary pump and damages the radial seal ring.

The overall height of the torque converter must therefore be measured each time the engine is damaged due to overspeed.

Copyright DaimlerChrysler AG 09.07.2007 CD-Ausgabe G/05/05 . This WIS print-out will not be recorded by Modification services.

26 Place the torque converter on a measuring plate with the primary pump flange downwards and measure dimension "A". If dimension "A" is less than 121.5 mm, the torque converter can be re-used; if the measured value is greater, the torque converter should be replaced.

Note
If it is necessary to replace the torque converter, the primary pump radial seal ring is also to be replaced.

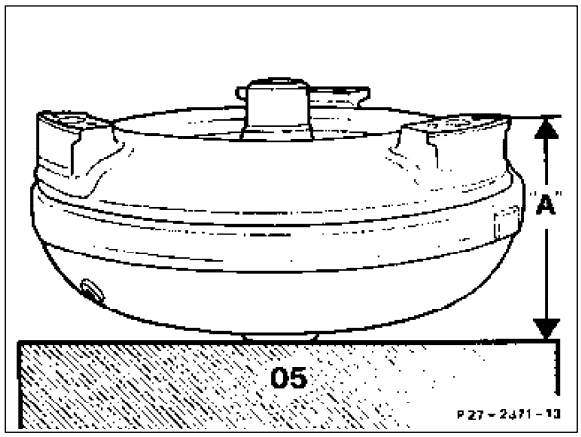

P27-2371-13

Torque converter dia.	Overall height "A" when new	Overall height "A" Maximun dim. in the event of repair
270 mm	120.7 mm	121.5 mm
290 mm	121.9 mm	122.7 mm

27 **Flushing out torque converter**

⚠

If the transmission oil is **burnt**, interspersed with **lining abrasion** and/or **metal swarf**, **the torque converter, oil cooler lines** and **oil cooler** must be **flushed out**.

28 Fill torque converter half full with ATF oil. Insert flushing mandrel (63) and drive at low speed for approx. 2 minutes using a hand drill. Then drain ATF oil through a clean cloth via the drain plug and allow the oil to drip through.
If after this there is metal swarf in the cloth, the torque converter must be replaced.

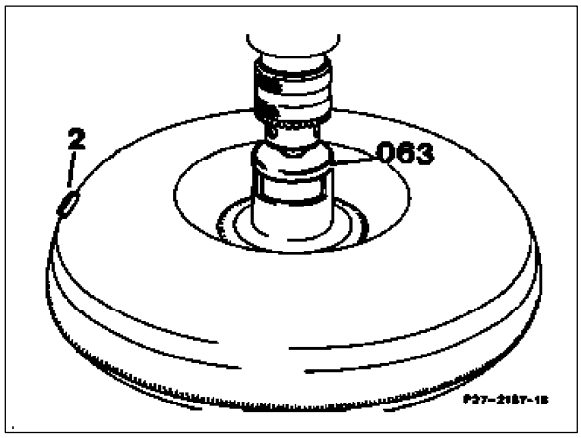

P27-2187-13

29 Screw oil cooler with oil cooler lines (49) onto the injector (064) and flush out with **ATF oil**, ensuring that the transmission oil **flows freely**. Then blow out oil cooler with oil cooler lines with compressed air.

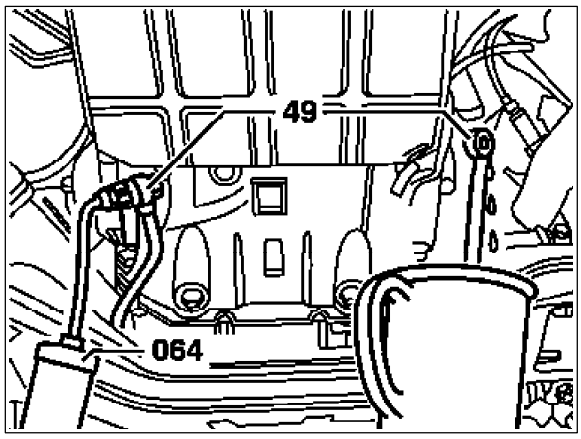

P27.20-0217-13

Copyright DaimlerChrysler AG 09.07.2007 CD-Ausgabe G/05/05 . This WIS print-out will not be recorded by Modification services.

Mercedes-Benz

service information

TO: **OUR MERCEDES-BENZ PASSENGER CAR DEALERS**

DATE: March 1995 **REF. NO.** 28/8

SUBJECT: **MODELS 124.230/290**
EXCHANGE 4-MATIC TRANSFER CASE VG30

On all exchange 4-MATIC transfer cases VG30, as of the effective serial number noted on page 2, the transmission housing sealing surface for piston AV and piston ZS radial seal ring is reworked. As a result, a modified piston AV and piston ZS radial seal ring (of different inner and outside diameter) is required.

The modified piston AV and piston ZS radial seal rings are identified via a white paint dot as well as by part number suffix "/55" (arrows, Figure 1).

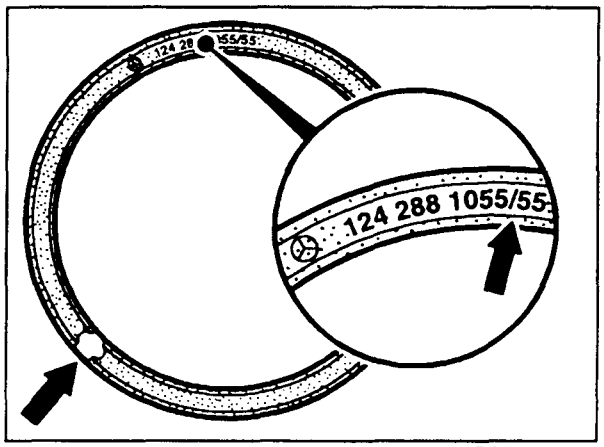

Figure 1 P28-5093-13

The modified exchange 4-MATIC transfer case VG30, is identified via an engraved "N" (arrows, Figure 2).

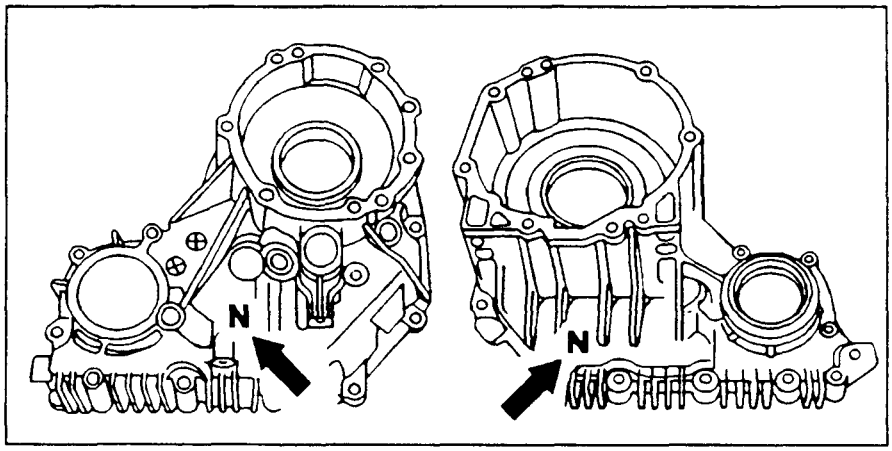

Figure 2 P28-5094-33

Order No. S-SI-28/8

© 1995 Mercedes-Benz of North America, Inc.
Mercedes-Benz Canada, Inc.
Service and Parts Literature

All rights reserved. Reproduction or translation in whole or in part is not permitted without authorization from the publisher. Printed in U.S.A.

Effective Serial Number (Exchange transfer case)

Model	As of Transfer Case End Number
4-MATIC transfer case VG30	1587

Parts Information

Qty.	Description	Part Number
1	Piston AV inner radial seal ring	124 288 1055/55
1	Piston AV outer radial seal ring	124 288 1155/55
1	Piston ZS inner radial seal ring	124 288 1255/55
1	Piston ZS outer radial seal ring	124 288 1355/55

Repair note

- A modified piston AV and piston ZS inner and outer radial seal ring must be used when reassembling the modified exchange 4-MATIC transfer case VG30 identified with an engraved "N".

ALLDATA AutoZone.com
HELP | VEHICLE | ACCOUNT | NOTES | EXIT

1990 Mercedes Benz 300TE 4Matic (124 Chassis) L6-2960cc 3.0L SOHC (103)

Top - Vehicle
Transmission and Drivetrain
Transfer Case
Testing and Inspection
4MATIC On Board and Complaint Related Diagnostics
Test Programs (ETP, HTP, MTP)
ETP (Electrical Test Program)
ETP - Test Procedures

SEARCH or Contact ALLDATA

ETP - Test Procedures

Electrical Test Program - Test

Test Steps 1.0 - 4.0

⇑	Test scope	Test connection	Test condition	Nominal value	Possible cause/Remedy
1.0	**4MATIC control module (N30/3)** Voltage supply Circuit 30a	N30/3 2 — 19	Ignition: **OFF**	11 – 14 V	Wiring, Ground (battery) (W10), Fuse in K1/2, Overvoltage protection relay module (K1/2).
2.0	**4MATIC control module (N30/3)** Voltage supply Circuit 15 (fused, 87E)	N30/3 2 — 1	Ignition: **ON**	11 – 14 V	Wiring, Fuse in K1/2, K1/2, Ignition switch (S2/1).
3.0	**Voltage circuit 61**	N30/3 2 — 11	Ignition: **ON** Engine: **at idle**	< 3 V 11 – 14 V	Wiring, Generator (G2).
4.0	**ASD/4MATIC (MIL) (A1e24) and diagnostic output**	N30/3 2 — 9	Ignition: **OFF** Unplug 4MATIC control module (N30/3). Ignition: **ON**	A1e24: **ON**	Wiring, A1e24.

ZOOM SIZED FOR PRINT

Test Steps 5.0 - 7.0

⇛	Test scope	Test connection	Test condition	Nominal value	Possible cause/Remedy
5.0	**ASD/4MATIC warning lamp (A1e25)**	N30/3 2 — 24	Ignition: **OFF** Unplug 4MATIC control module (N30/3). Ignition: **ON**	A1e25: **ON**	Wiring, A1e25.
6.0	**Vehicles up to 04/91 Oil pressure switch (A7/2s1)**	N30/3 20 — 19	Engine: **At idle** Service valve in **TEST** position (see Figure 4)	< 1.5 V 11 – 14 V	Wiring, A7/2s1, HTP - System Pressure ⇒ 1.0
	Vehicles as of 05/91 Oil pressure switch (A7/2s1) and 4MATIC function/test selection switch (S7/3)	N30/3 20 — 19	Engine: **At idle** S7/3 in **TEST** position (see Figure 5)	< 1.5 V 11 – 14 V	Wiring, A7/2s1, S7/3, HTP - System Pressure ⇒ 1.0
7.0	**4MATIC – ABS Signal line**	N30/3 2 — 23	Ignition: **ON**	6 – 7 V	Wiring.

ZOOM SIZED FOR PRINT

Test Steps 8.0 - 10.1

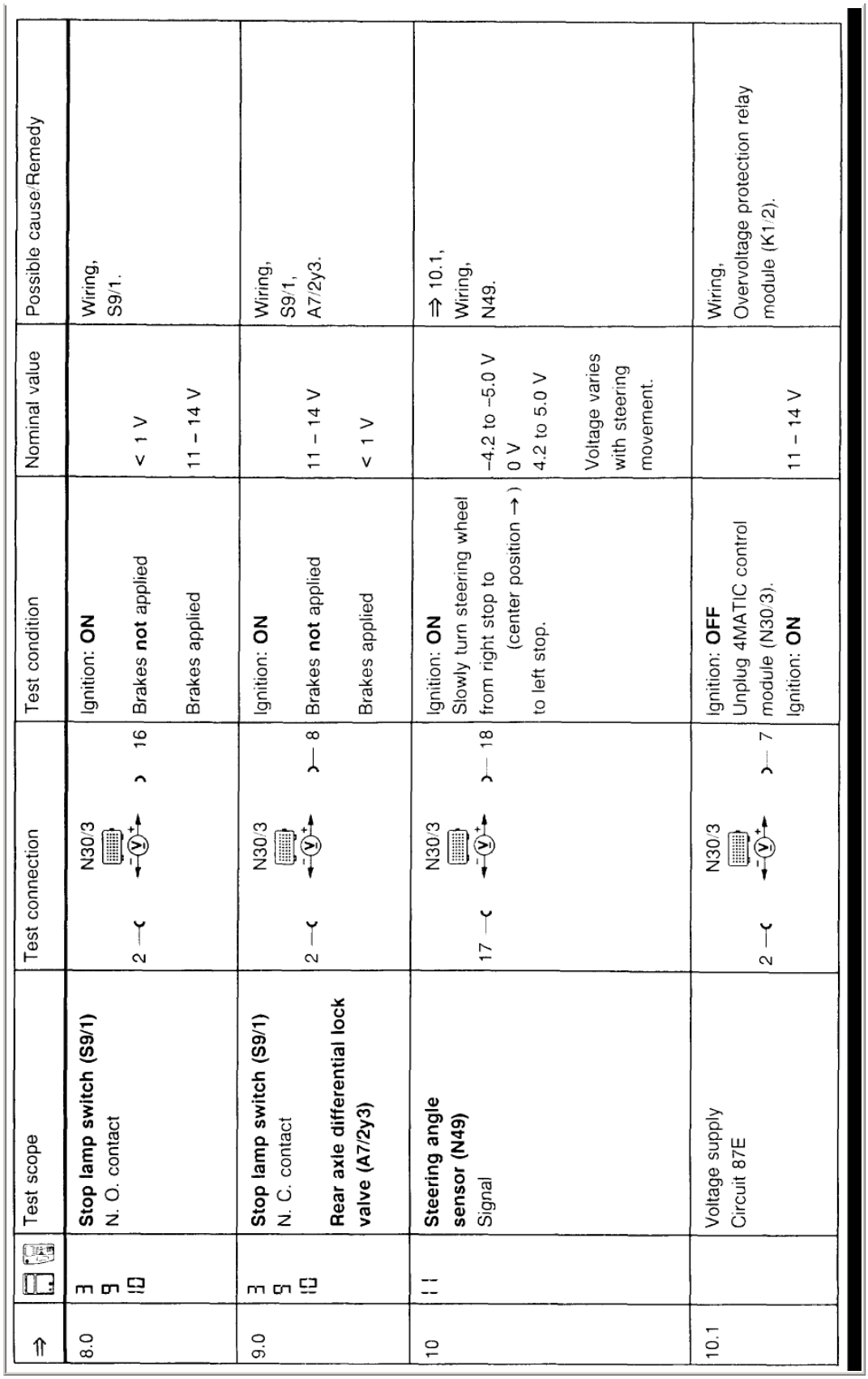

⇑		Test scope	Test connection	Test condition	Nominal value	Possible cause/Remedy
8.0	3 5 15	**Stop lamp switch (S9/1)** N. O. contact	N30/3 2 — 16	Ignition: **ON** Brakes **not** applied Brakes applied	< 1 V 11 – 14 V	Wiring, S9/1.
9.0	3 5 15	**Stop lamp switch (S9/1)** N. C. contact **Rear axle differential lock valve (A7/2y3)**	N30/3 2 — 8	Ignition: **ON** Brakes **not** applied Brakes applied	11 – 14 V < 1 V	Wiring, S9/1, A7/2y3.
10	11	**Steering angle sensor (N49)** Signal	N30/3 17 — 18	Ignition: **ON** Slowly turn steering wheel from right stop to (center position →) to left stop.	–4.2 to –5.0 V 0 V 4.2 to 5.0 V Voltage varies with steering movement.	⇒ 10.1, Wiring, N49.
10.1		Voltage supply Circuit 87E	N30/3 2 — 7	Ignition: **OFF** Unplug 4MATIC control module (N30/3). Ignition: **ON**	11 – 14 V	Wiring, Overvoltage protection relay module (K1/2).

ZOOM SIZED FOR PRINT

Test Steps 11.0 - 13.0

⇛		Test scope	Test connection	Test condition	Nominal value	Possible cause/Remedy
11.0		**Steering angle sensor (N49)** Wiring reversed	N30/3 7 — 17 7 — 18	Ignition: **ON** Turn steering wheel slowly until nominal value is reached on both meters, then hold securely. ⚠ **Perform ⇛ 12.0 immediately.** **Note:** For ⇛ 11.0 see □ 22 Figure 2 for connection diagram.	0 – 0.7 V	⇛ 10.0
12.0		**Steering angle sensor (N49)** Wiring reversed	N30/3 17 — 18	Ignition: **ON** Turn steering wheel slowly to the left	0 – 0.7 V 4.2 – 5.0 V	If a reading of –4.2 to –5.0 V is obtained, connection 17 and 18 in the steering angle sensor connector (N49x2) are reversed.
13.0		**Left front vehicle speed signal (VSS)** from ABS control module (N30)	N30/3 2 — 5	Lift front of vehicle. Ignition: **ON** Turn left front wheel by hand (approx. 1 rev. per sec.)	> 3 V~	⇛ 13.1, Wiring, ABS control module (N30), Left front axle VSS sensor (L6/1), 4MATIC control module (N30/3).

ZOOM SIZED FOR PRINT

Test Steps 13.1 - 15.1

⇛		Test scope	Test connection	Test condition	Nominal value	Possible cause/Remedy
13.1		Left front axle VSS sensor (L6/1)	L6/1x1 (coaxial connector)	Ignition: **OFF**	0.85 – 2.3 kΩ	L6/1.
14.0	5	**Right front vehicle speed signal (VSS)** from ABS control module (N30)	N30/3 2 — 13	Lift front of vehicle. Ignition: **ON** Turn right front wheel by hand (approx. 1 rev. per sec.)	> 3 V~	⇛ 14.1, Wiring, ABS control module (N30), Right front axle VSS sensor (L6/2), 4MATIC control module (N30/3).
14.1		Right front axle VSS sensor (L6/2)	L6/2x1 (coaxial connector)	Ignition: **OFF**	0.85 – 2.3 kΩ	L6/2.
15.0	6	**Rear vehicle speed signal (VSS)** from ABS control module (N30)	N30/3 2 — 10	Lift front of vehicle. Ignition: **ON** Turn rear wheel by hand (approx. 1 rev. per sec.)	> 3 V~	⇛ 15.1, Wiring, ABS control module (N30), Rear axle VSS sensor (L6), 4MATIC control module (N30/3).
15.1		Rear axle VSS sensor (L6)	L6x1	Ignition: **OFF**	0.85 – 2.3 kΩ	L6.

ZOOM SIZED FOR PRINT

Test Steps 16.0 - 18.0

⇒		Test scope	Test connection	Test condition	Nominal value	Possible cause/Remedy
16.0	B	**Front axle drivetrain valve (A7/2y1)** Operation	N30/3 2 4	Ignition: **OFF** Unplug 4MATIC control module (N30/3). Ignition: **ON**	A7/2y1 actuates audibly	⇒ 19.0, Wiring, Overvoltage protection relay module (K1/2), A7/2y1.
17.0	B G	**Central differential lock valve (A7/2y2)** Operation	N30/3 2 6	Ignition: **OFF** Unplug 4MATIC control module (N30/3). Ignition: **ON**	A7/2y2 actuates audibly	⇒ 19.0, 20.0, Wiring, Overvoltage protection relay module (K1/2), A7/2y2.
18.0	G D	**Rear axle differential lock valve (A7/2y3)** Operation	N30/3 2 8	Ignition: **OFF** Unplug 4MATIC control module (N30/3). Ignition: **ON**	A7/2y3 actuates audibly	⇒ 20.0, Wiring, Stop lamp switch (S9/1), K1/2, A7/2y3.

ZOOM SIZED FOR PRINT

Test Steps 19.0 - 20.0

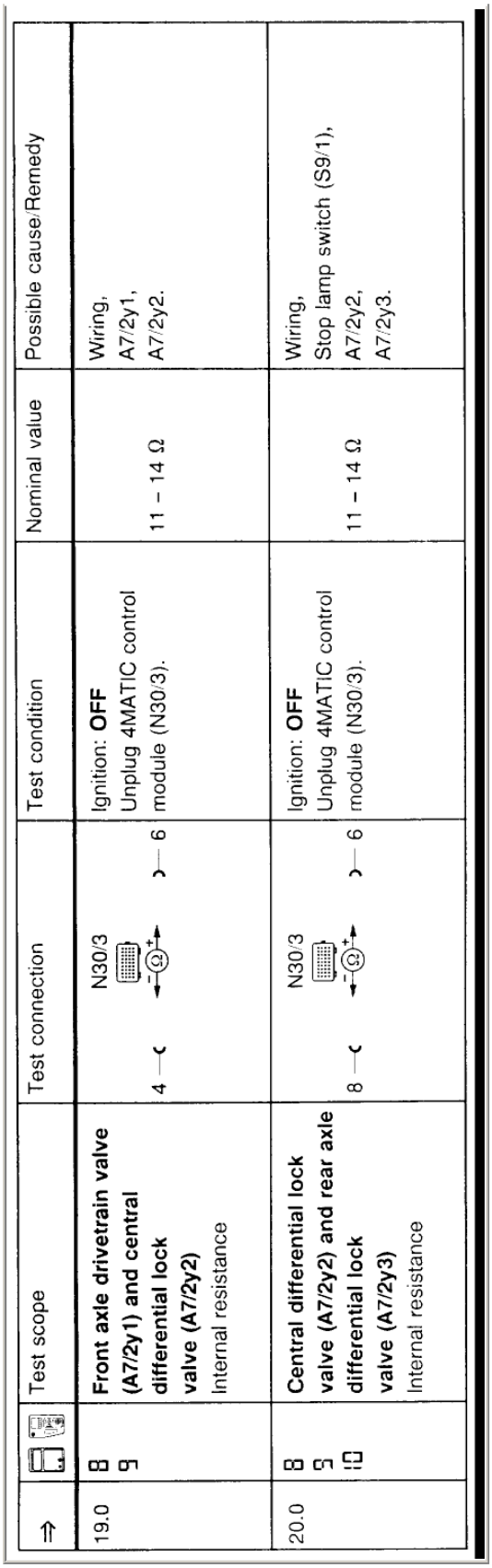

⇑		Test scope	Test connection	Test condition	Nominal value	Possible cause/Remedy
19.0	B 9	**Front axle drivetrain valve (A7/2y1) and central differential lock valve (A7/2y2)** Internal resistance	N30/3 4 — 6	Ignition: **OFF** Unplug 4MATIC control module (N30/3).	11 – 14 Ω	Wiring, A7/2y1, A7/2y2.
20.0	B 5 10	**Central differential lock valve (A7/2y2) and rear axle differential lock valve (A7/2y3)** Internal resistance	N30/3 8 — 6	Ignition: **OFF** Unplug 4MATIC control module (N30/3).	11 – 14 Ω	Wiring, Stop lamp switch (S9/1), A7/2y2, A7/2y3.

ZOOM SIZED FOR PRINT

Figure 1

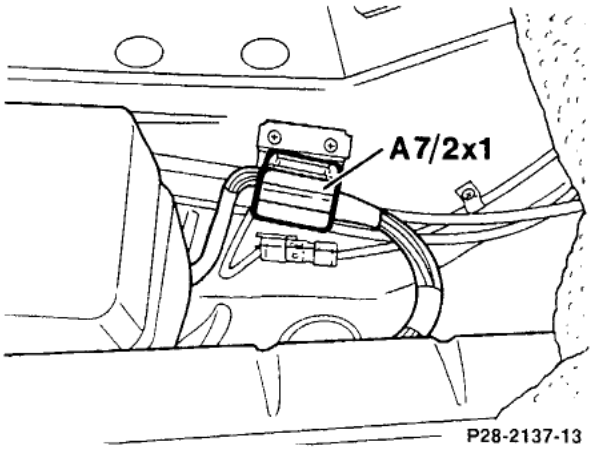

Figure 1
A7/2x1 4MATIC hydraulic unit connector

ZOOM

Figure 2

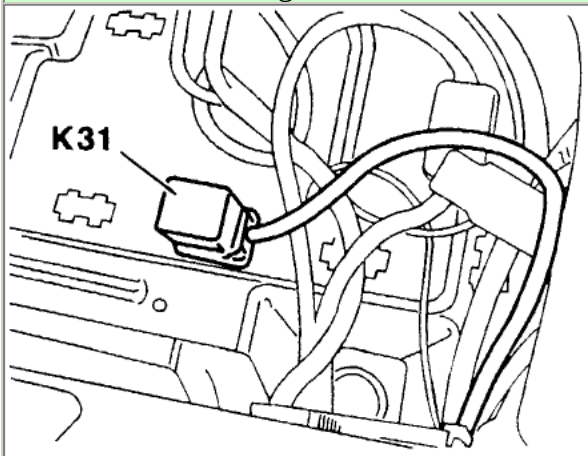

Figure 2

K31 4MATIC function/test relay module (below passenger side foot panel)

ZOOM

Figure 3

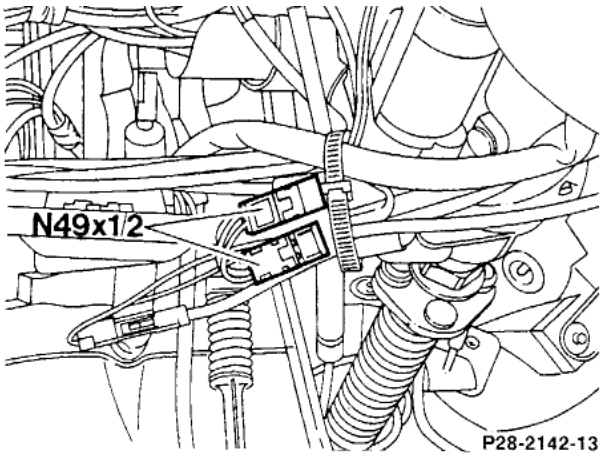

Figure 3

N49x1	Steering angle sensor connector
N49x2	Steering angle sensor connector (near steering column)

ZOOM

Figure 4

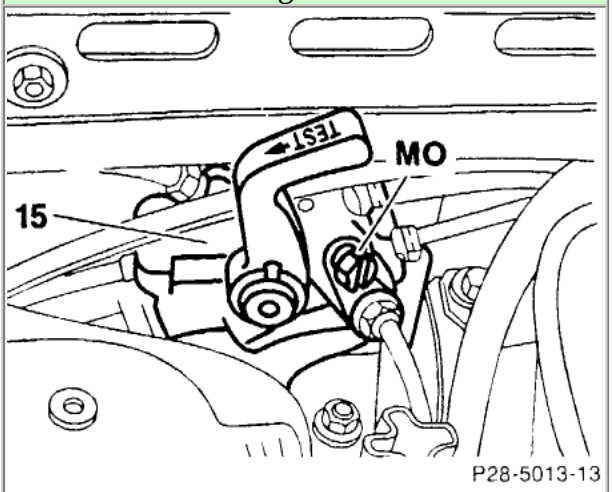

Figure 4

15	Service valve

ZOOM

Figure 5

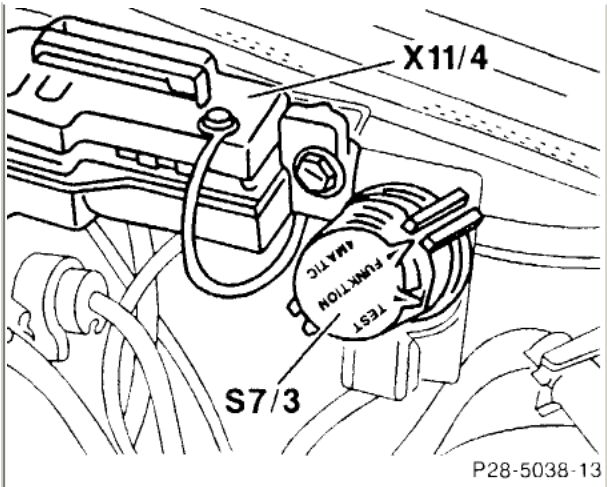

Figure 5

S7/3	4MATIC function/test selection switch
X11/4	Data link connector (DTC readout)

ZOOM

Figure 6

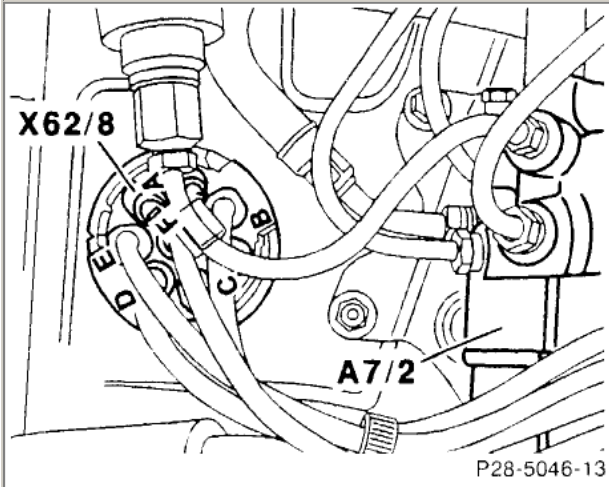

Figure 6

A7/2	4MATIC hydraulic unit
X62/8	Rear axle multiple circuit junction connector (as of 05/91)

ZOOM

Figure 7

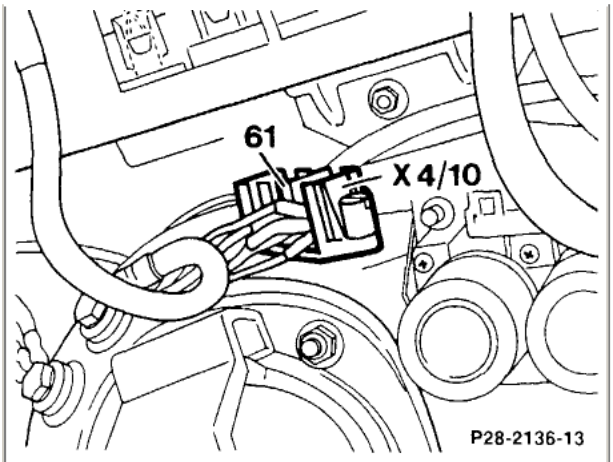

Figure 7

X4/10 Terminal block
(circuit 30/circuit 61 battery) (3-pole)
(forward of battery, on right wheelhousing)

ZOOM

Figure 8

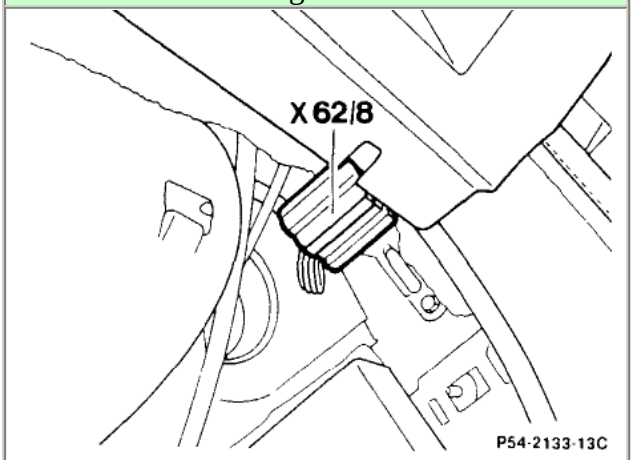

Figure 8

X62/8 Rear axle multiple circuit junction connector
(right A-pillar, at firewall)

ZOOM

Figure 9

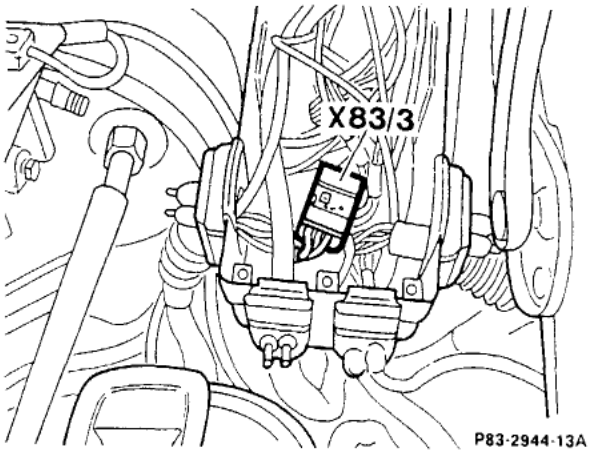

Figure 9

X83/3 Instrument cluster connector (4MATIC MIL) (3-pole) (below fuse and relay box) (F1)

ZOOM

Figure 10 -- Layout of connector for 4MATIC Control Module (N30/3)

Figure 10

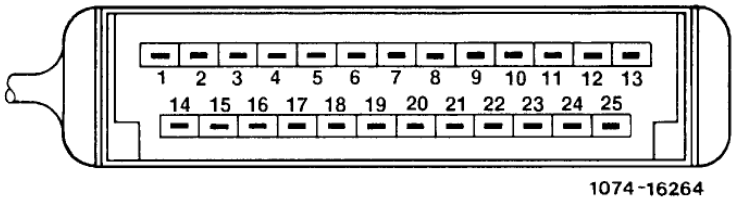

1	Voltage supply from overvoltage protection relay module (87E/87L/30a, 9-pole (Circuit 87E)
2	Ground (battery) (W10)
3	Not used
4	Front axle drivetrain valve (A7/2y1)
5	Left front VSS from ABS control module (N30)
6	Central differential lock valve (A7/2y2)
7	Steering angle sensor (N49) (–)
8	Rear axle differential lock valve (A7/2y3)
9	Diagnostic output ASD/4MATIC MIL (A1e24)
10	Rear axle VSS from ABS control module (N30)
11	Voltage circuit 61
12	Not used
13	Right front VSS from ABS control module (N30)
14-15	Not used
16	Stop lamp switch (S9/1) (4-pole) N. O. contact
17-18	Signal from steering angle sensor (N49)
19	Voltage supply from overvoltage protection relay module 87E/87L/30a, 9-pole (circuit 30a)
20	Oil pressure switch (A7/2s1)
21-22	Not used
23	ABS - signal
24	ASD/4MATIC warning lamp (A1e25)

ZOOM

Copyright © 2001 ALLDATA LLC. Terms of Service

Diagnostic Tips, Symbols, Tools & Connections

Diagnostic Equipment Connections

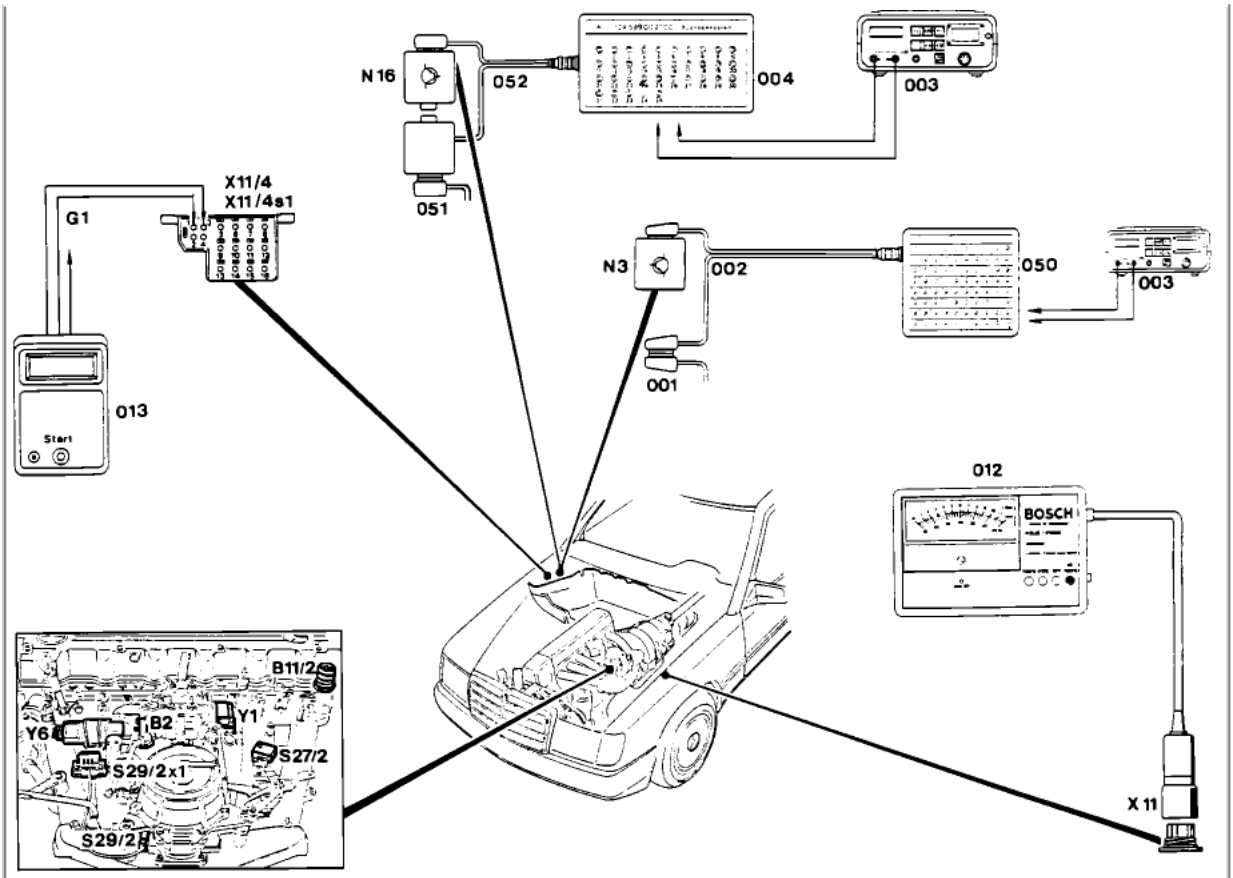

001	CIS-E control unit connector	G1	Battery
002	Test cable 104 589 00 63 00	N3	CIS-E control unit
003	Multimeter	N16	Engine systems control unit (MAS)
004	Socket box tester, 35 pole	X11	Diagnostic socket/terminal block (circuit TD)
012	On-off ratio tester	X11/4	Test connection for diagnosis, (impulse readout, 16-pole)
013	Impulse counter		
050	Socket box tester 126 pole		
051	Engine systems control unit (MAS) connector		
052	Test cable 129 589 05 63 00		

ZOOM SIZED FOR PRINT

Test Equipment Connections

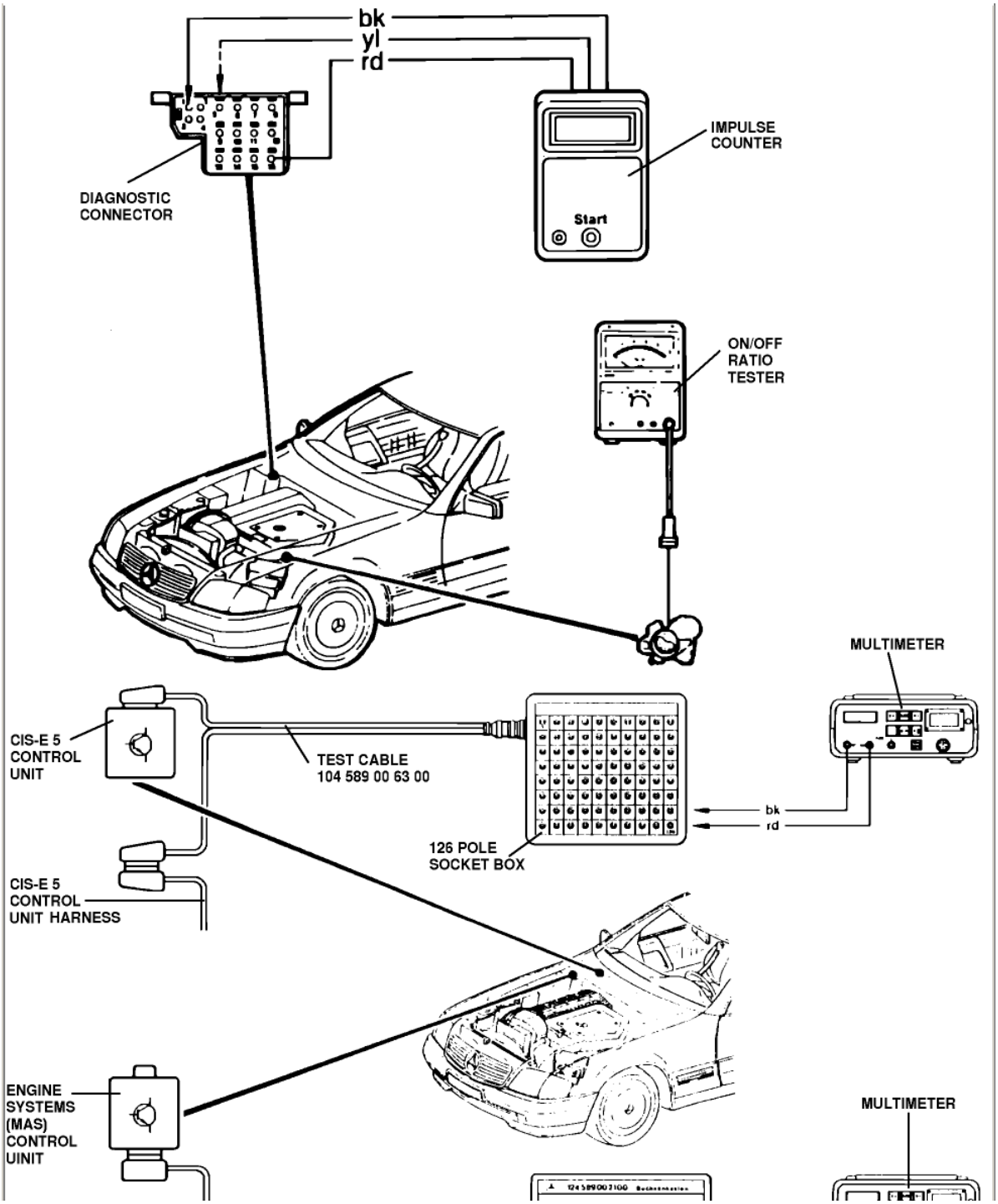
bk
yl
rd
IMPULSE COUNTER
DIAGNOSTIC CONNECTOR
Start
ON/OFF RATIO TESTER
MULTIMETER
CIS-E 5 CONTROL UNIT
TEST CABLE 104 589 00 63 00
bk
rd
126 POLE SOCKET BOX
CIS-E 5 CONTROL UNIT HARNESS
ENGINE SYSTEMS (MAS) CONTROL UINIT
MULTIMETER

ZOOM SIZED FOR PRINT

Diagnostic Equipment Connections

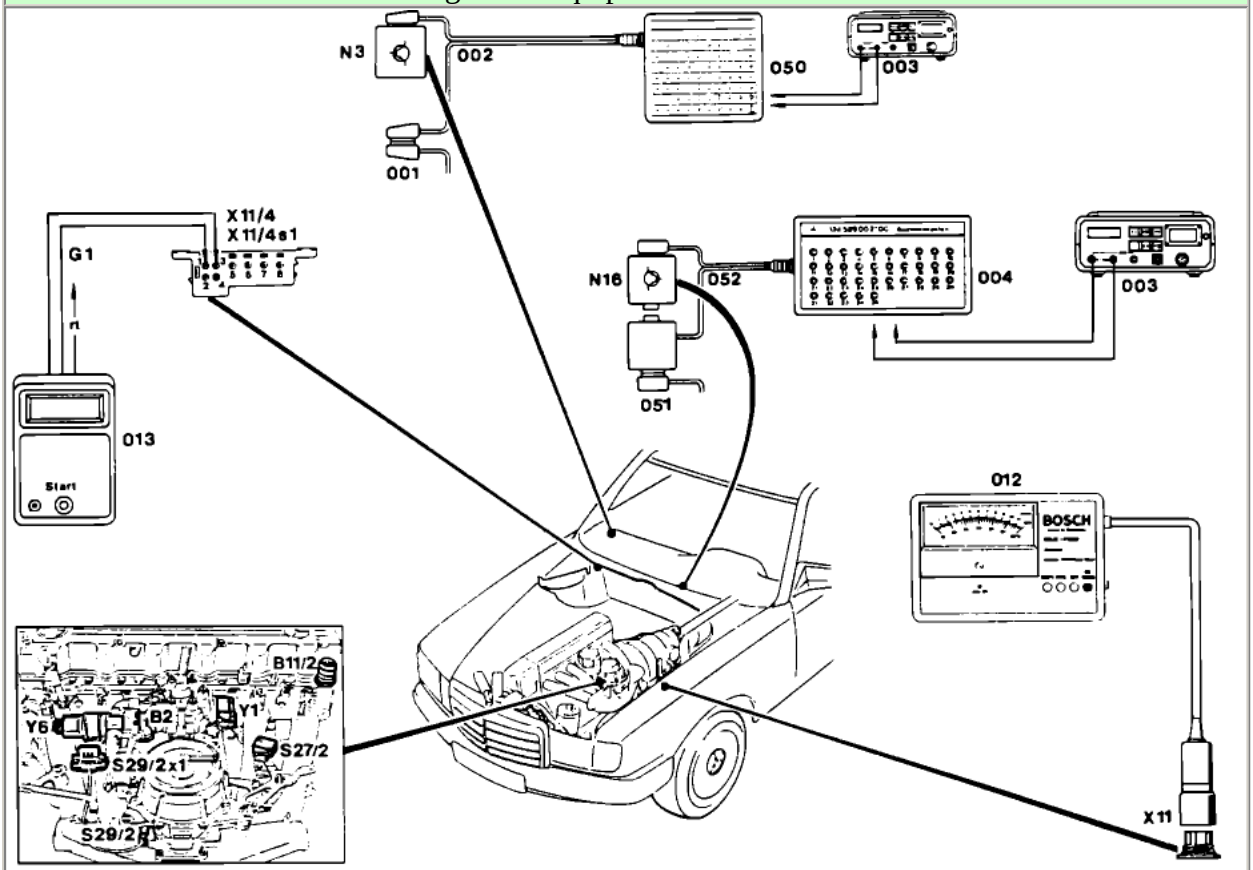

001	CIS-E control unit connector	G1	Battery
002	Test cable 104 589 00 63 00	N3	CIS-E control unit
003	Multimeter	N16	Engine systems control unit (MAS)
004	Socket box tester, 35 pole	X11	Diagnostic socket/terminal block (circuit TD)
012	on-off ratio tester	X11/4	Test connection for diagnosis, (impulse readout, 8-pole)
013	Impulse counter		
050	Socket box tester, 126 pole		
051	Engine systems control unit (MAS) connector		
052	Test cable 129 589 05 63 00		

ZOOM SIZED FOR PRINT

Copyright © 2001 ALLDATA LLC. Terms of Service

ALLDATA AutoZone
HELP | VEHICLE | ACCOUNT | NOTES | E

1990 Mercedes Benz 300TE 4Matic (124 Chassis) L6-2960cc 3.0L SOHC (103)

Top - Vehicle
↳ Powertrain Management
↳ Computers and Control Systems
↳ Data Link Connector
↳ Description and Operation
↳ On-Board Diagnostic Connector
↳ Federal Models
↳ **Except Models 300 SE, SEL**

SEARCH or Contact ALL

Except Models 300 SE, SEL

On-Board Diagnostic Connector Terminal Designations	
1	Circuit 31 (Ground)
2	Pushbutton (California only)
3	CIS–E control unit
4	LED (California only)
5	Not used
6	SRS control unit
7	Roll bar control unit
8	EZL/AKR ignition control unit
9	ADS control unit
10	Power soft top control unit
11	ATA control unit
12	Infrared remote control unit
13	5–speed A/T control unit
14	Engine systems control unit (MAS)
15	Not used
16	Circuit 15

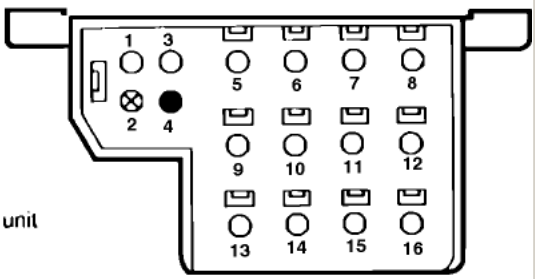

ZOOM

The on-board diagnostic connector provides information concerning fault conditions within the CIS-E(5), SRS, EZL/AK

1990 Mercedes Benz 300TE 4Matic (124 Chassis) L6-2960cc 3.0L SOHC (103) - Except Models 300 SE, SEL

transmission and other computer controlled systems. Up to 34 fault codes concerning CIS-E(5) related problems may be
counter. Furthermore, 15 additional (MAS) control unit fault codes concerning engine operation may also be extracted a

Impulse Counter/On-Board Diagnostic Connector

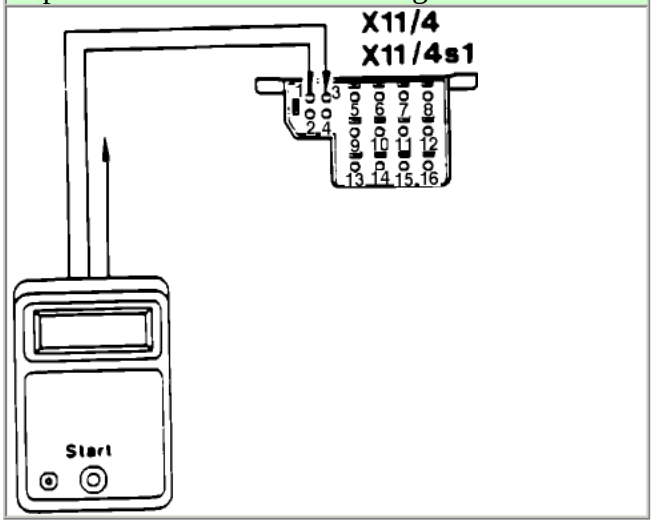

ZOOM

When the start-button on the impulse counter is depressed for 2 to 4 seconds (ignition ON), the impulse counter will beg
the malfunction(s) will be indicated by the number in the impulse counter window. Fault codes will be displayed in asce
are stored, the next fault code will be displayed by pressing the start button again. If no additional fault codes are stored,

Copyright © 2001 ALLDATA LLC. Terms of Service

4MATIC Electrical Disable mod for 90/91 models

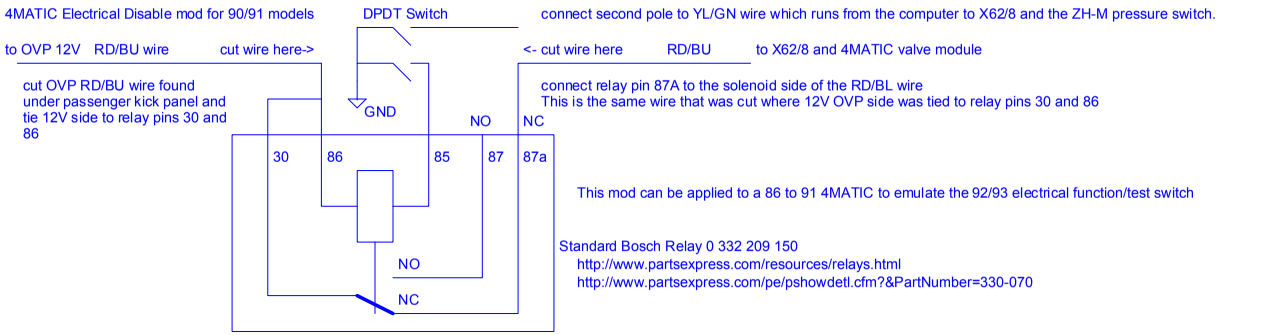

This mod can be applied to a 86 to 91 4MATIC to emulate the 92/93 electrical function/test switch

Standard Bosch Relay 0 332 209 150
http://www.partsexpress.com/resources/relays.html
http://www.partsexpress.com/pe/pshowdetl.cfm?&PartNumber=330-070

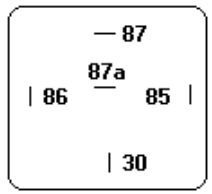

Common Relay Pin Configuration (Bosch-type)

This circuit is identical to the relay circuit that was installed into the 92/93 4MATIC models, this relay replaced the mechanical valve in the engine compartment. The location of the 92/93 4MATIC function/test relay is at the passenger footwell behind the kick panel. The manual states that X62/8 is located under the car just forward of the fuel pump but the wiring passes through the floor near the door vacuum pump which is under the right rear seat. To save wire it would likely be best to install the relay where the factory has, under the rear seat could be an alternative location. The two wires (RD/BU and YL/GN) should be assessible under the passenger kick panel.
Operation: When the DPDT switch is closed the relay switches and breaks power to the two transfer case solenoids. The second DPDT pole grounds and will indicate a loss of pressure and shut down the 4MATIC system operation. ZH-M pressure is not affected so self levelling systems will continue to operate.

4MATIC Impulse Test and Reset mod

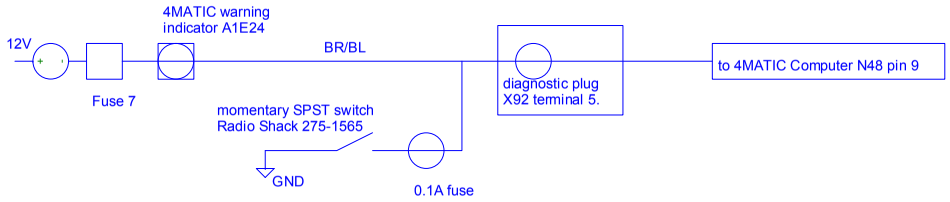

If you tap into the 4MATIC warning lamp wire (brown blue BR/BL), and connect a wire to a panel mounted momentary switch with a fuse (0.1A) and have the other switch terminal grounded, you will have the capability to remotely flash codes or reset the 4MATIC system from the inside of the car. No more battery disconnect! Just press the button for 6 to 8 seconds. Or if easier, plug the momentary switch wire into pin 5 at the diagnostic plug near the battery. Pressing the button for 2-4 seconds will flash any stored codes to the indicator.

Future Modification: It may be possible to fool the 4MATIC computer to think that the two solenoids are still wired when the DPDT switch is closed.
If fooled properly and the pressure line is "not" wired (Grounded) to the other switch pole, we may be able to keep the ASD function working. This may be possible by connecting a resistor to pin 87 (NO) and then connect the resistor to the RD/BL line going to the solenoids.
I am not sure if the computer senses voltage or current thru the solenoids, this monitoring may be tested by measuring for solenoid current while in Mode 1 2WD, Mode 1 is when both solenoids are not actuated. The resistor would have to be large enough to not let the wire current rise to a level where the solenoids are actuated.

Ian Read
6118 131A St
Surrey, BC V3X 1P8

Page Size: A

Revision: - January 1, 2004 Page 1 of 1

BA28.00-Z-9999AZ	Tightening torques: Passenger cars: Transfer case	29.4.97

MODEL all

	Complete transfer case	MODEL 163, 210.081 /082 /083 /281 /282 / 283	BA28.10-P-1000-01A
	Complete transfer case	MODEL 203.081 /084 /281 /284, 211.080 / 082 /083 /280 /282 /283, 220.083 /084 /087 / 183 /184 /187	BA28.10-P-1000-01C
	Transfer case electrical system	MODEL 163	BA28.19-P-1000-01A
	Transfer case gear assembly, shafts	MODEL 163, 210.081 /082 /083 /281 /282 / 283	BA28.50-P-1000-01A
	Transfer case gear set, shafts	MODEL 203.081 /084 /281 /284, 211.08 /28, 220.083 /084 /087 /183 /184 /187	BA28.50-P-1000-01C

Copyright DaimlerChrysler AG 12/11/04 10:10 PM G/10/04;WIS 10/04 DVD, alle Sprachen;2004-10-05;G/10/04;WIS 10/04 DVD, alle Sprachen;2004-10-05. This WIS printout will not be recorded by the update s

	Transfer case gear set, shafts	MODEL 203.081 /084 /281 /284, 211.08 /28, 220.083 /084 /087 /183 /184 /187	BE28.50-P-1000-01B

Copyright DaimlerChrysler AG 12/11/04 10:10 PM G/10/04;WIS 10/04 DVD, alle Sprachen;2004-10-05;G/10/04;WIS 10/04 DVD, alle Sprachen;2004-10-05. This WIS printout will not be recorded by the update s

BF28.00-Z-9999AZ	Capacities: Passenger cars: Transfer case	29.4.97

MODEL all

	Complete transfer case	MODEL 124.226 /230 /290 /330 /333 /393	BF28.10-P-1000-01A
	Complete transfer case	MODEL 163, 210.081 /082 /083 /281 /282 / 283	BF28.10-P-1000-01C
	Complete transfer case	MODEL 203.081 /084 /281 /284, 211.080 / 082 /083 /280 /282 /283, 220.083 /084 /087 / 183 /184 /187	BF28.10-P-1000-01D

Copyright DaimlerChrysler AG 12/11/04 10:11 PM G/10/04;WIS 10/04 DVD, alle Sprachen;2004-10-05;G/10/04;WIS 10/04 DVD, alle Sprachen;2004-10-05. This WIS printout will not be recorded by the update s

MODEL all

	Rear axle drive output shaft with needle roller bearing	MODEL 210 ...	BT28.10-P-0001-01A

Copyright DaimlerChrysler AG 12/11/04 10:11 PM G/10/04;WIS 10/04 DVD, alle Sprachen;2004-10-05;G/10/04;WIS 10/04 DVD, alle Sprachen;2004-10-05. This WIS printout will not be recorded by the update service.

28-010 General

The 4MATIC is a four-wheel drive system in which the drive of the front wheels can be engaged automatically if required along with the permanent rear-wheel drive. In addition, if required, the center differential lock in the transfer case and the ASD rear axle differential lock are engaged automatically.

The engagement of the 4MATIC is controlled electronically/hydraulically in 3 stages without involving the driver.

Shift stage 0	**-**	**rear-wheel drive**
Shift stage 1	**-**	**four-wheel drive compensated**
Shift stage 2	**-**	**four-wheel drive locked inter-axle**
Shift stage 3	**-**	**four-wheel drive locked inter axle and inter-wheel**

Automatic engagement of the 4MATIC offers not only optimized traction, but a high degree of driving safety compared to other systems.

4MATIC vehicles are fitted with ABS as standard.

When braking, all differential locks and the four-wheel drive are disengaged. The driving stability and the effect of ABS are therefore retained during braking.

Copyright DaimlerChrysler AG 30.07.2008 CD-Ausgabe G/08/04 . This WIS print-out will not be recorde d by Modification services.

Driving with 4MATIC
Warning lamp and function indicator lamp

Two displays with various symbols are located in the instrument cluster for the 4MATIC.

In key position two in the steering lock, the ASD/4MATIC (A1e25) function display and the yellow ASD/4MATIC (A1e24) warning lamp in the instrument cluster come on and go out when the engine is running.

When driving, the ASD/4MATIC (A1e25) function indicator lamp shows that the 4MATIC is engaged. It warns the driver that he is driving near the limit and that the tires are approaching the limit of adhesion. He can then better adapt his driving style to suit the changed road conditions.

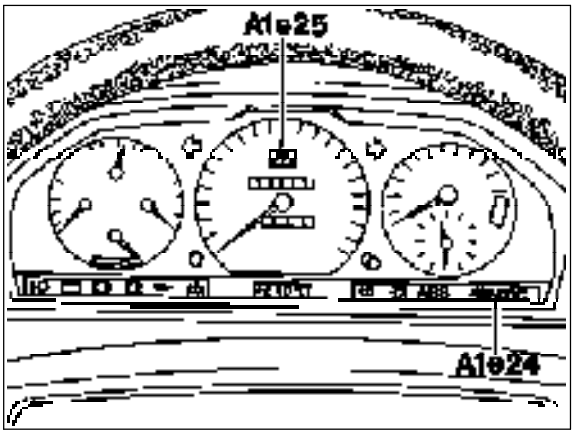

A1e24 ASD/4MATIC warning lamp
A1e25 ASD/4MATIC function indicator lamp

Copyright DaimlerChrysler AG 30.07.2008 CD-Ausgabe G/08/04 . This WIS print-out will not be recorde d by Modification services.

Shift stage 1 is always engaged when starting off. The function indicator lamp however does not come on provided there is no wheel skid.

The ASD/4MATIC (A1e25) function indicator lamp is controlled via a 4-pin plug connection on the back of the instrument cluster. The brightness of the function indicator lamp is reduced when the lights are switched on to prevent any distraction when driving at night.

The ASD/4MATIC (A1e24) warning lamp is controlled via a 2-pin plug connection on the back of the instrument cluster. If it comes on when the engine is running, the 4MATIC is inoperative. There is an electrical or hydraulic fault.

In this case, switch the service valve or relocate the coding plug into test position and have fault eliminated as soon as possible. In the test position, the 4MATIC and the level control are inoperative.

An electrical fault in the 4MATIC (N30/3) control unit is stored for subsequent interrogation. It can be called up at the test coupling (X11/4) located in the components compartment (28-110).
Refer to Diagnosis Manual Chassis - Volume 2 - 8.1, 4MATIC.

Copyright DaimlerChrysler AG 30.07.2008 CD-Ausgabe G/08/04 . This WIS print-out will not be recorde d by Modification services.

Location of components

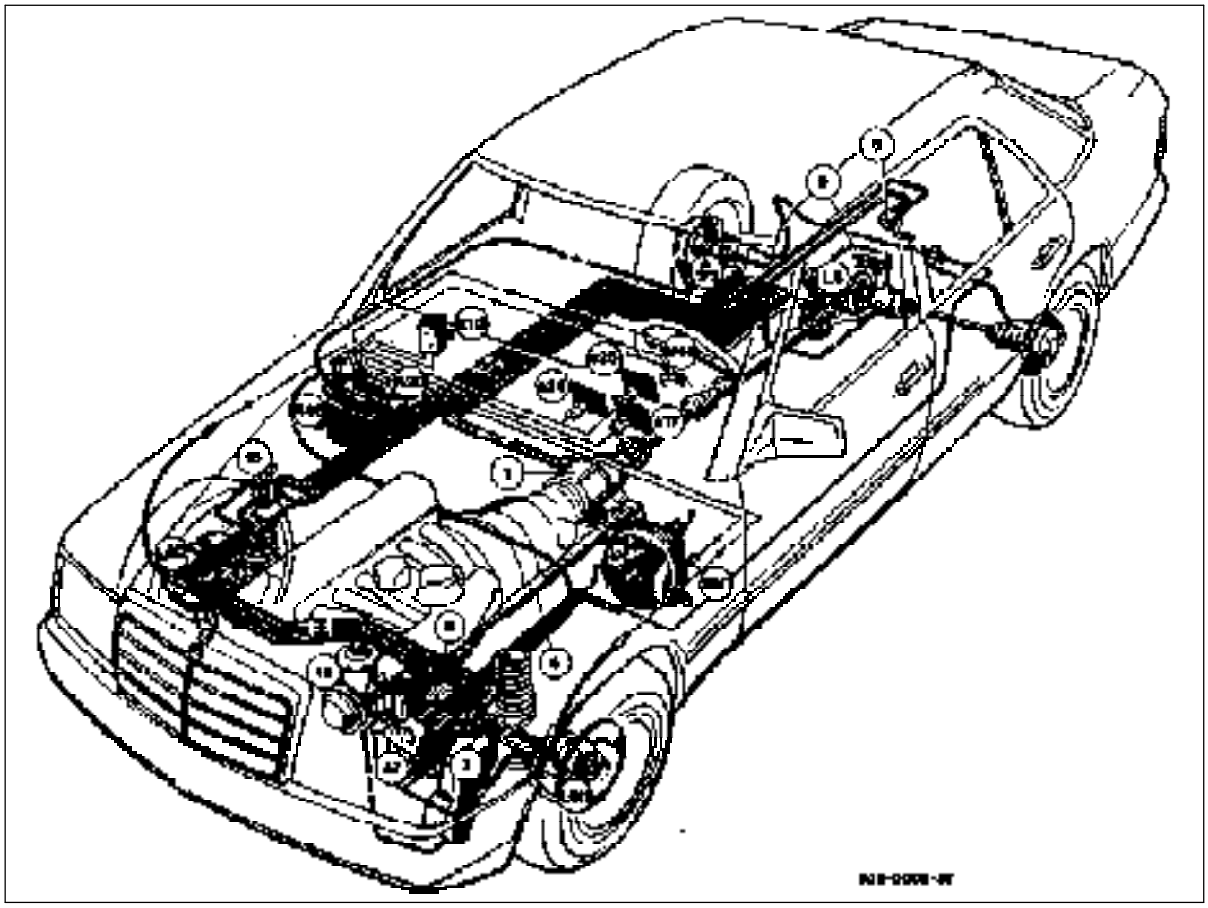

	Electrics/electronics
A1e17	ABS warning lamp
A1e24	ASD/4MATIC indicator lamp
A1e25	ASD/4MATIC function indicator lamp
K1/2	Overvoltage protection relay 87E/87L/30a,(9-pin) (series K1/1)
L6	Rear axle speed sensor
L6/1	Left front axle speed sensor
L6/2	Right front axle speed sensor
N30	ABS control unit
N30/3	4MATIC control unit
N49	Steering angle sensor
S9/1	Stop lamp switch (4MATIC/ASD)
X11/4	Test coupling for diagnosis, pulse readout (8-pin)

	Hydraulics
2	Oil reservoir
6	Level control height controller
12	Pressure oil pump
15	Service valve
A7	ABS hydraulic unit
A7/2	4MATIC valve control unit

	Mechanical
1	Transfer case
4	Front-wheel drive propeller shaft
8	Front axle differential with front axle shafts
9	ASD locking rear axle differential

Copyright DaimlerChrysler AG 30.07.2008 CD-Ausgabe G/08/04 . This WIS print-out will not be recorde d by Modification services.

28-020 Overall function

If speed differences occur at the wheels, the four-wheel drive is engaged in drive and overrun mode when driving backwards and forwards.

Essentially the following criteria apply for the engagement and disengagement of the four-wheel drive and the two differential locks:

- Drive skid
- Vehicle speed
- Acceleration
- Steering angle
- Time
- Operating the service brake

The 4MATIC control unit (N30/3) receives the necessary signals via:

- Speed sensors on the front wheels and on
- Rear axle center piece assembly
- Steering angle sensor on steering wheel
- Stop lamp switch

The following 4MATIC shift stages are engaged in accordance with a predetermined logic using these signals:

0 - Rear-wheel drive (basic drive)

1 - Four-wheel drive compensated with 35/65% front/rear torque distribution

2 - Four-wheel drive locked inter-axle

3 - Four-wheel drive locked inter-axle and inter-wheel

The incoming signals are processed in accordance with the following criteria in the logic section of the 4MATIC control unit (N30/3):

Drive skid

If differences between the mean front and rear-wheel speeds occur, this is recognized as skid and the front-wheel drive shift stage 1 is engaged.

If there are still speed differences, shift stage 2 is engaged as the next step and shift stage 3 below 38 km/h, if required.

The following shift thresholds are determinate for engagement of stage 1:

Speed difference (wheel speed difference)	Vehicle speed
>2 km/h	<100 km/h
>2%	>100 km/h

Four-wheel drive and differential locks remain engaged provided the engagement criteria exist. If they no longer exist, the differential locks are released in sequence after a brief holding time of approx. 0.7 s.

Alearning effect for starting-off is included in the 4MATIC control unit (N30/3):

Copyright DaimlerChrysler AG 30.07.2008 CD-Ausgabe G/08/04 . This WIS print-out will not be recorde d by Modification services.

The 4MATIC control unit (N30/3) recognizes an unsuccessful attempt at starting off such that a speed of 5 km/h is not exceeded within 0.5 s. It then engages both differential locks (shift stage 3) in addition to the permanent four-wheel drive (shift stage 1) for the next start. The ASD/4MATIC function indicator lamp (A1e25) comes on permanently and only goes out 0.5 s after shifting back into shift stage 0 (rear-wheel drive). The differential locks are released at 10 km/h if the engagement criteria no longer exist.

Vehicle speed

When starting off, up to a speed of at least 20 km/h, the four-wheel drive, i.e. shift stage 1 is engaged (no function indicator!). Shift stage 3 is no longer engaged over 35 km/h.

Acceleration

When starting off with rapid acceleration (more than 0.5 m/s2) the four-wheel drive (shift stage 1) remains engaged at more than 20 km/h provided the acceleration is maintained.

Steering angle

If transverse skid occurs due to a sudden change of road surface adhesion whilst cornering or due to sharp steering movements, the compensated four-wheel drive shift stage 1 engages at speeds above 30 km/h, thus stabilizing the vehicle during cornering. A deviation of the radius of the curve driven to the course preselected by the driver is detected by the 4MATIC control unit (N30/3) from the speed differential between the left and right front wheel and the recorded steering angle. If the speed differential between the front wheels exceeds the speed-dependent value calculated from the steering angle, shift stage 1 is engaged.

Time

If shift stages 1, 2 or 3 are engaged more often within a predetermined time period, the holding times for the respective shift stages are extended thus avoiding a constant engagement and disengagement of the front-wheel drive and differential locks.

Operating the service brake

The 4MATIC control unit (N30/3) receives signals via the stop lamp switch (S9/1) that the driver is braking and immediately engages shift stage 0 (rear-wheel drive). The driving stability during braking and full ABS function is thus retained. Only when braking from speeds below 5 km/h and when starting off is interrupted by braking up to a speed of 10 km/h, does shift stage 1 remain engaged.

Copyright DaimlerChrysler AG 30.07.2008 CD-Ausgabe G/08/04 . This WIS print-out will not be recorde d by Modification services.

Electronic components

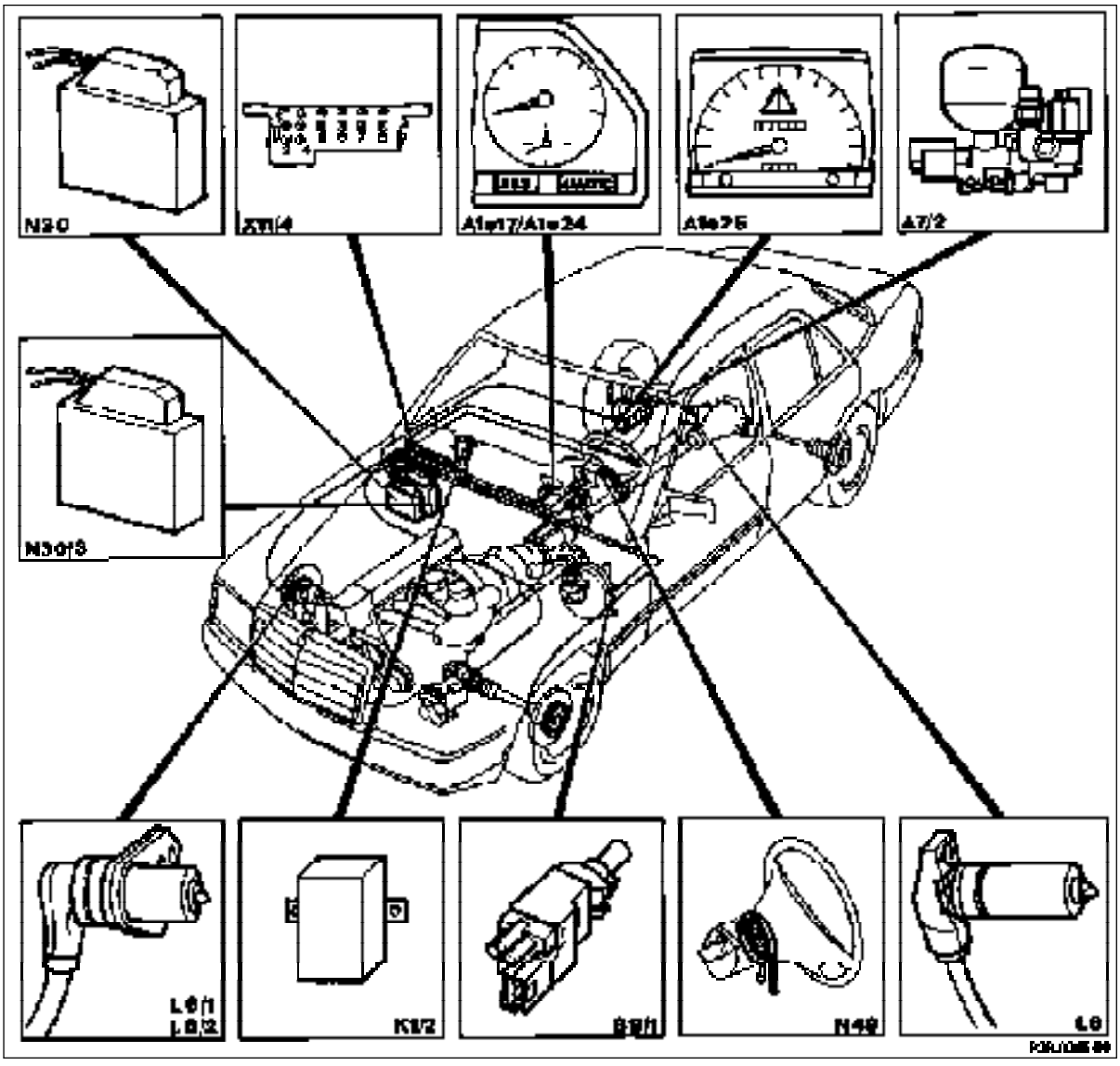

A1e17	ABS warning lamp
A1e24	ASD/4MATIC warning lamp
A1e25	ASD/4MATIC function indicator lamp
A7/2	4MATIC valve control unit
K1/2	Overvoltage protection relay 87E/87L/30a, (9-pin) (series K1/1)
L6	Rear axle speed sensor
L6/1/2	Left and right front axle speed sensor
N30	ABS control unit
N30/3	4MATIC control unit
N49	Steering angle sensor
S9/1	Stop lamp switch (4MATIC/ASD)
X11/4	Test coupling for diagnosis, pulse readout (8-pin)

Copyright DaimlerChrysler AG 30.07.2008 CD-Ausgabe G/08/04 . This WIS print-out will not be recorde d by Modification services.

Electronics function
The electronics control the engagement and disengagement of the four-wheel drive and differential locks. They switch the solenoid valves in the 4MATIC valve control unit (A7/2).

The electronics consist of the following components:
- Voltage supply
- Rear axle speed sensor (L6)
- Left and right front axle speed sensors (L6/1/2)
- Steering angle sensor (N49)
- Stop lamp switch (4MATIC/ASD) (S9/1)
- 4MATIC control unit (N30/3)

Voltage supply
The voltage supply for the electronics is via the overvoltage protection relay (K1/2). It is in the right of the components compartment.

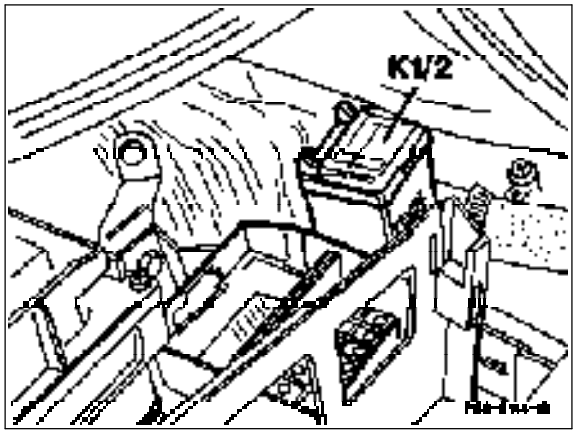

K1/2 Overvoltage protection relay 87E/87L/30a (9-pin) (series K1/1)

Copyright DaimlerChrysler AG 30.07.2008 CD-Ausgabe G/08/04 . This WIS print-out will not be recorde d by Modification services.

Battery voltage is continuously supplied to terminal 30. A 10 A fuse is installed between terminal 30 and 30a. The fault memory is continuously supplied with voltage via terminal 30a. When the ignition is switched on, the relays are controlled by electronics via terminal 15. In this way the ABS (N30) and 4MATIC (N30/3) control units are supplied with voltage via terminal 87E and additional equipment via terminal 87L.

Overvoltage protection is achieved by means of a 22 volt Zener diode. Voltage peaks above 22 volts which occur upstream of the overvoltage protection are switched directly to ground by the Zener diode.

An overload is prevented by fuses. Terminals 87E and 87L are fused separately.

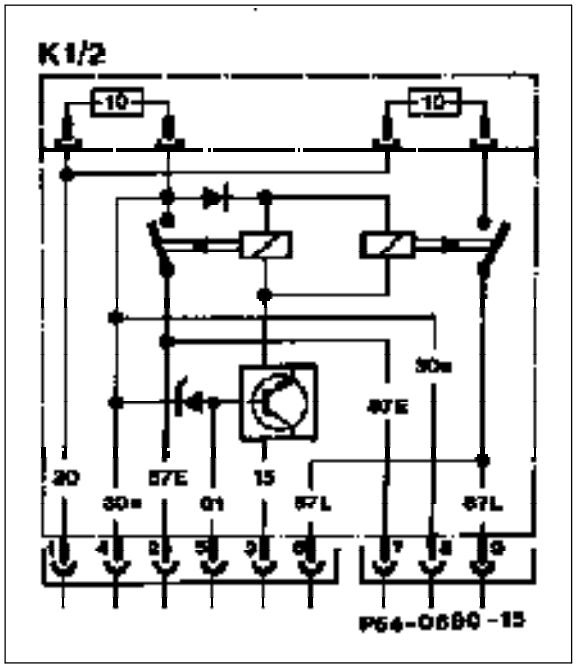

Wheel speed sensors (L6, L6/1/2)

The wheel speed sensors (L6, L6/1/2) comprise a magnet core and a coil. A toothed rotor moves in the magnetic field of the wheel speed sensor. The teeth of the rotor interrupt the magnetic field when turning. Each tooth induces a voltage pulse in the coil of the wheel speed sensor. The pulses are transmitted to the 4MATIC control unit (N30/3) which determines the speed from the number of pulses.

Copyright DaimlerChrysler AG 30.07.2008 CD-Ausgabe G/08/04 . This WIS print-out will not be recorde d by Modification services.

Front axle wheel speed sensors (L6/1/2)

The front axle wheel speed sensors (L6/1/2) are located in the steering knuckle. The rotor toothing (43) is machined in the front axle drive shaft (44) in the case of the 4MATIC.

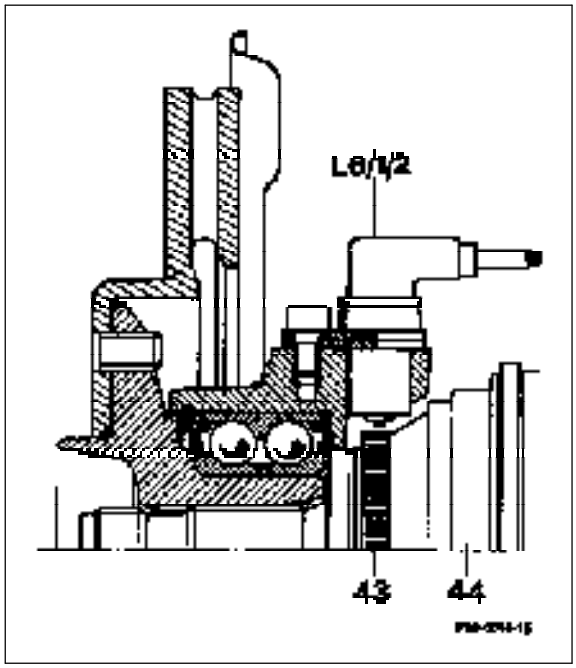

43	Rotor
44	Front axle drive shaft
L6/1/2	Left/right front axle speed sensor

Rear axle wheel speed sensor (L6)

The rear axle speed sensor (L6) is located in the rear axle casing (45). The rotor (43) is pressed on to the bevel pinion (44).

Asuitable rotor with a different number of teeth is required for each rear axle ratio. The mean speed of both rear wheels is determined via the speed sensor (L6) on the rear axle.

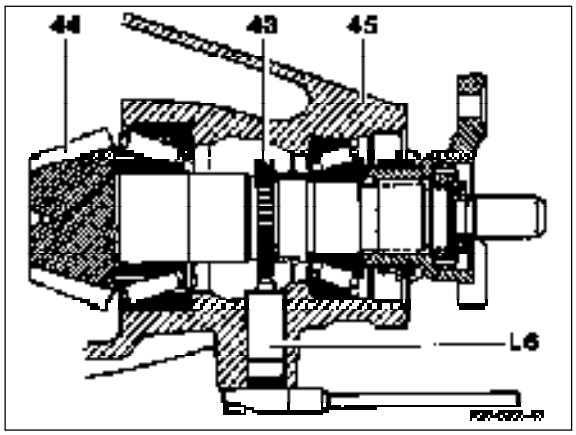

43	Rotor
44	Bevel pinion
45	Rear axle casing
L6	Rear axle speed sensor

Steering angle sensor(N49)

The steering angle sensor (N49) is located beneath the steering wheel. It senses the steering movements and transmits them to the 4MATIC control unit (N30/3).

The steering angle sensor (N49) comprises 72 magnets (c) and two Hall-effect sensors (b). Hall-effect sensors are semi-conductor elements whose electrical characteristics are influenced by magnetic fields.

The magnets are embedded in a plastic slip ring (a) on the underside of the impact absorber. The two Hall-effect sensors (b) are offset. Thus different signals arise between left and right steering lock.

The 4MATIC control unit (N30/3) compares the input signals to specified values and engages the four-wheel drive in the event of lateral skid.

Copyright DaimlerChrysler AG 30.07.2008 CD-Ausgabe G/08/04 . This WIS print-out will not be recorde d by Modification services.

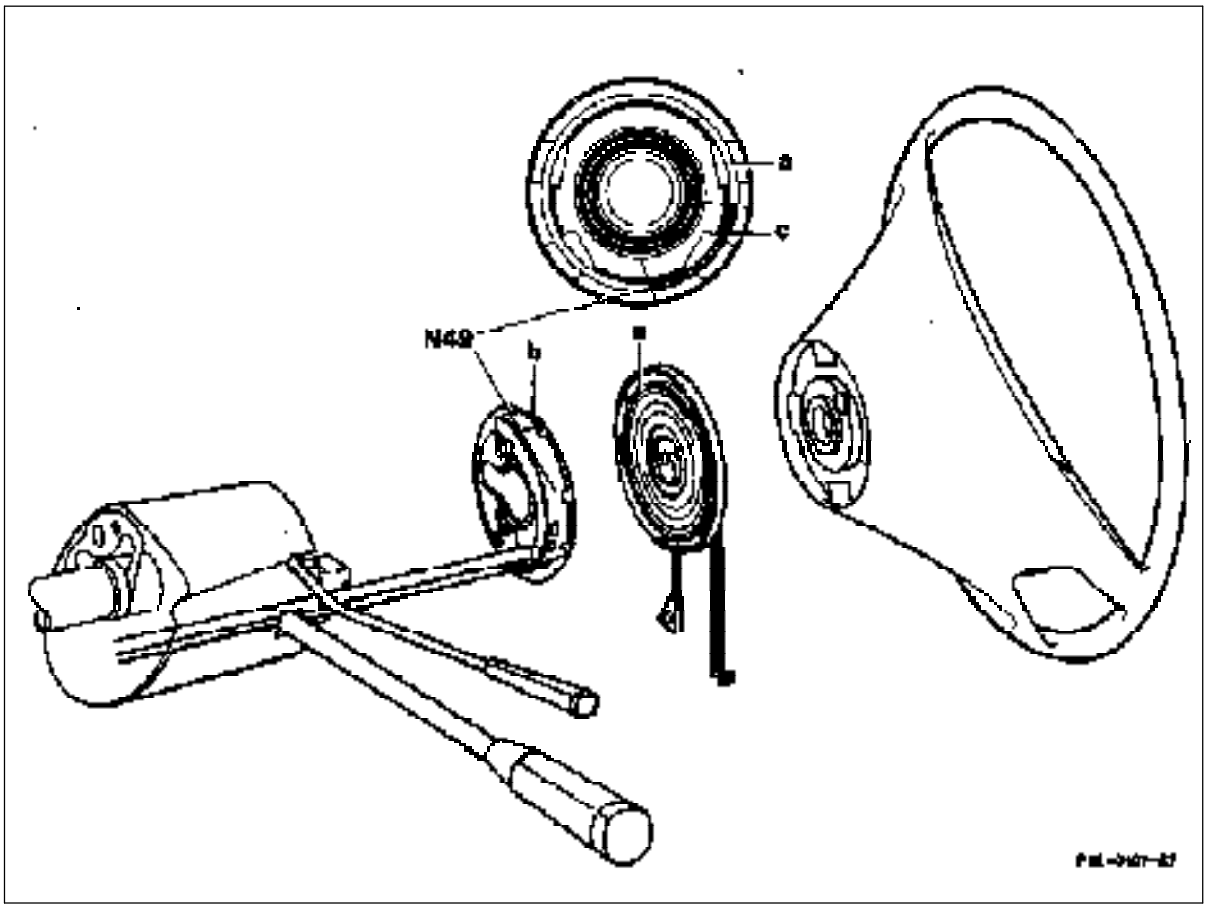

N49	Steering angle sensor	b	Hall-effect sensor
a	Plastic slip ring	c	Magnets

Stop lamp switch (4MATIC/ASD) (S9/1)
The stop lamp switch (4MATIC/ASD) (S9/1) has an additional contact (arrow) for the 4MATIC. The stop lamp contact has one plug connection of 4 mm ∅ and an auxiliary contact of 2.5 mm ∅.

When the service brake is operated, the stop lamp contact is closed and the auxiliary contact is opened.

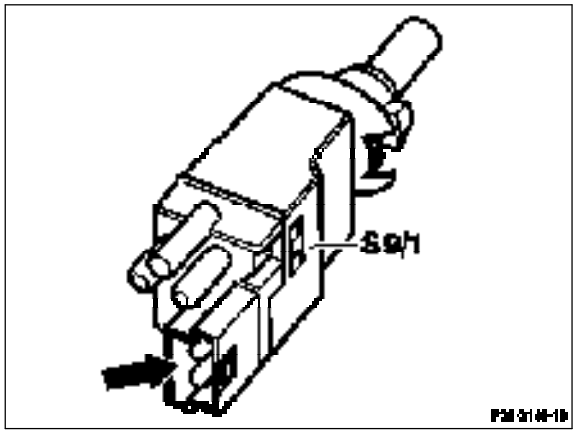

S9/1 Stop lamp switch (4MATIC/ASD)

Copyright DaimlerChrysler AG 30.07.2008 CD-Ausgabe G/08/04 . This WIS print-out will not be recorde d by Modification services.

When the service brake is operated, the 4MATIC control unit (N30/3) receives a signal via a cable (d) whereby the 4MATIC is switched off. The second cable de-energizes the ABS control unit (N30).

The effect of the auxiliary contact is that when the brake pedal is operated, the rear axle differential lock valve (A7/2y3) is switched off in each case and the rear axle lock releases even if there is a fault in the stop lamp contact or 4MATIC control unit (N30/3).

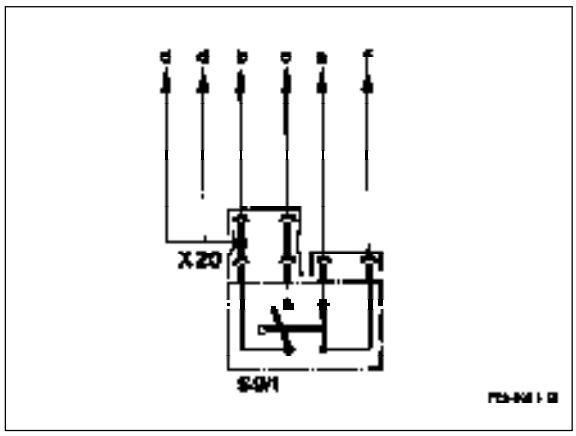

S9/1 Stop lamp switch (4MATIC/ASD)
X20 Intermediate plug connector, stop lamp switch (2-pin)
b Stop lamp
c Fuse box, fuse 5 (terminal 15)
d 4MATIC control unit (N30/3) and ABS control unit (N30)
e Overvoltage protection (terminal 87L)
f Rear axle differential lock valve (A7/2y3)

4MATIC control unit (N30/3)
The 4MATIC control unit (N30/3) is located in the right of the components compartment. It processes all input signals and controls the solenoid valves (A7/2y) in the 4MATIC valve control unit (A7/2).

The entire signal conditioning and processing is performed digitally.

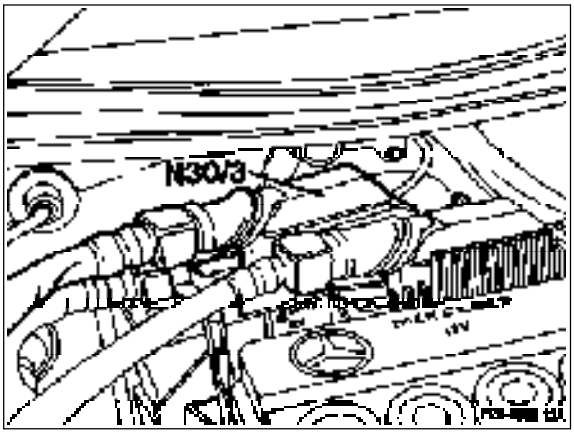

N30/3 4MATIC control unit

Copyright DaimlerChrysler AG 30.07.2008 CD-Ausgabe G/08/04 . This WIS print-out will not be recorde d by Modification services.

Note
Since 07/90 a 4MATIC control unit has been installed with a modified logic section.

The 4MATIC control unit (N30/3) is divided up into the functions:
- Signal conditioning section
- Logic section
- Safety circuit
- Display control and fault memory

Signal conditioning section
In the signal conditioning section, input signals are filtered and converted into a form which can be evaluated for the logic section.

Logic section
The logic section compares the input signals with each other and with predetermined characteristics.

It thus determines:
- Drive skid
- Acceleration
- Vehicle speed
- Lateral skid
- Holding time

A calibrating device in the logic section compensates for different tire rolling radii and sets the steering angle to zero point straight ahead, thus eliminating the tolerance effect of axle geometry and tires.

Copyright DaimlerChrysler AG 30.07.2008 CD-Ausgabe G/08/04 . This WIS print-out will not be recorde d by Modification services.

Safety circuit
The job of the safety circuit is to recognize defective signals in the 4MATIC control unit (N30/3) and faults in electronic components which are located externally, as well as a pressure drop in the hydraulic system.

If a fault is detected, the 4MATIC switches to shift stage 0. The fault is stored in the 4MATIC control unit (N30/3) and indicated by the warning lamp coming on.

The safety circuit also constantly monitors the battery voltage. If the battery voltage is less than 10.5 V, the system is switched off until the voltage has attained its nominal value again.

Display control and fault memory
Refer to Diagnosis Manual Chassis Volume 2 - 8.1, 4MATIC.

Copyright DaimlerChrysler AG 30.07.2008 CD-Ausgabe G/08/04 . This WIS print-out will not be recorde d by Modification services.

28-040 Hydraulics

Hydraulic system

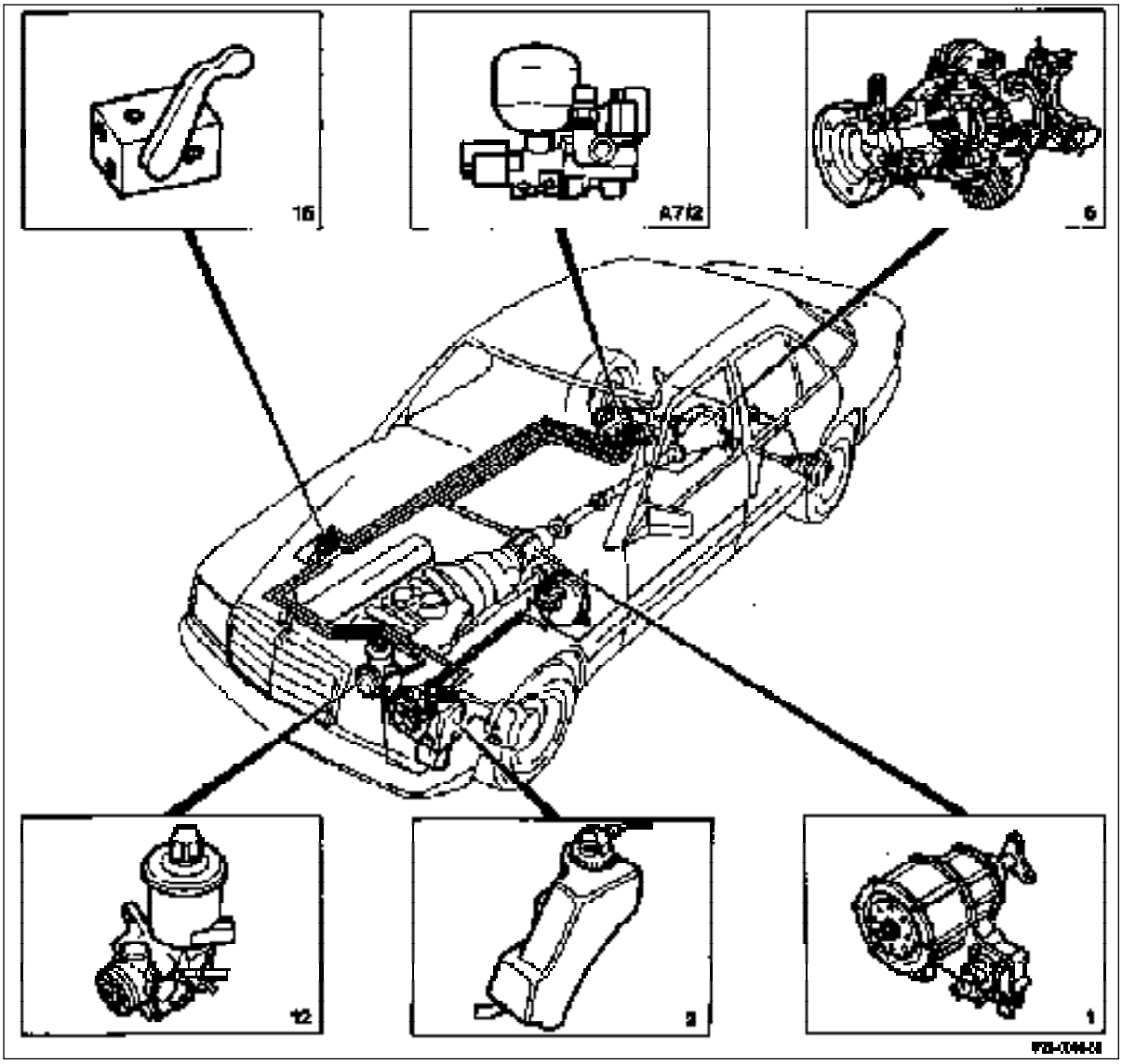

1	Transfer case	12	Oil pump
2	Oil reservoir	15	Service valve
5	Rear axle differential	A7/2	4MATIC valve control unit

Copyright DaimlerChrysler AG 30.07.2008 CD-Ausgabe G/08/04 . This WIS print-out will not be recorde d by Modification services.

Hydraulic diagram (up to transfer case no. 26 616)

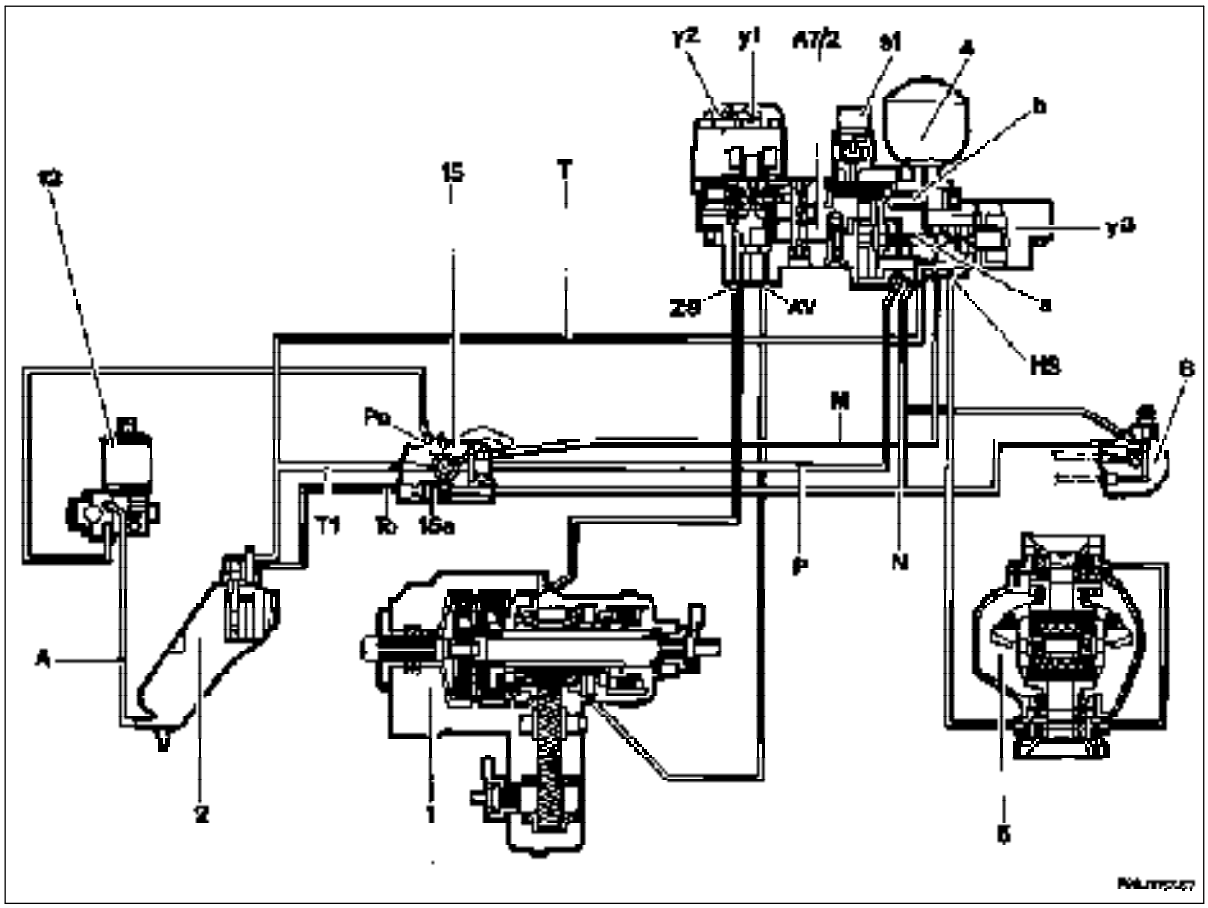

1	Transfer case
2	Oil reservoir
4	Pressure reservoir
5	Rear axle differential
6	Level controller
12	Pressure oil pump
15	Service valve
15a	Pressure limiting valve (5 bar)
A7/2	4MATIC valve control unit
A7/2s1	Oil pressure switch (5 bar)
A7/2y1	Front axle drive train valve
A7/2y2	Center differential lock valve
A7/2y3	Rear axle differential lock valve

A	Suction line of pressure oil pump
AV	Solenoid valve connection of front axle drive train
HS	Solenoid valve connection of rear axle differential lock
M	Return line to service valve
N	Return line to service valve with connection to level controller
P	Pressure line
Po	Connection of pressure line to service valve
T	Return line from 4MATIC valve control unit (2)
T1	Return line from service valve
To	Return line from service valve
ZS	Solenoid valve connection of center differential lock
a	Accumulator charging valve
b	Pressure limiting valve

Copyright DaimlerChrysler AG 30.07.2008 CD-Ausgabe G/08/04 . This WIS print-out will not be recorde d by Modification services.

Hydraulic diagram (as of transfer case no. 26 617)

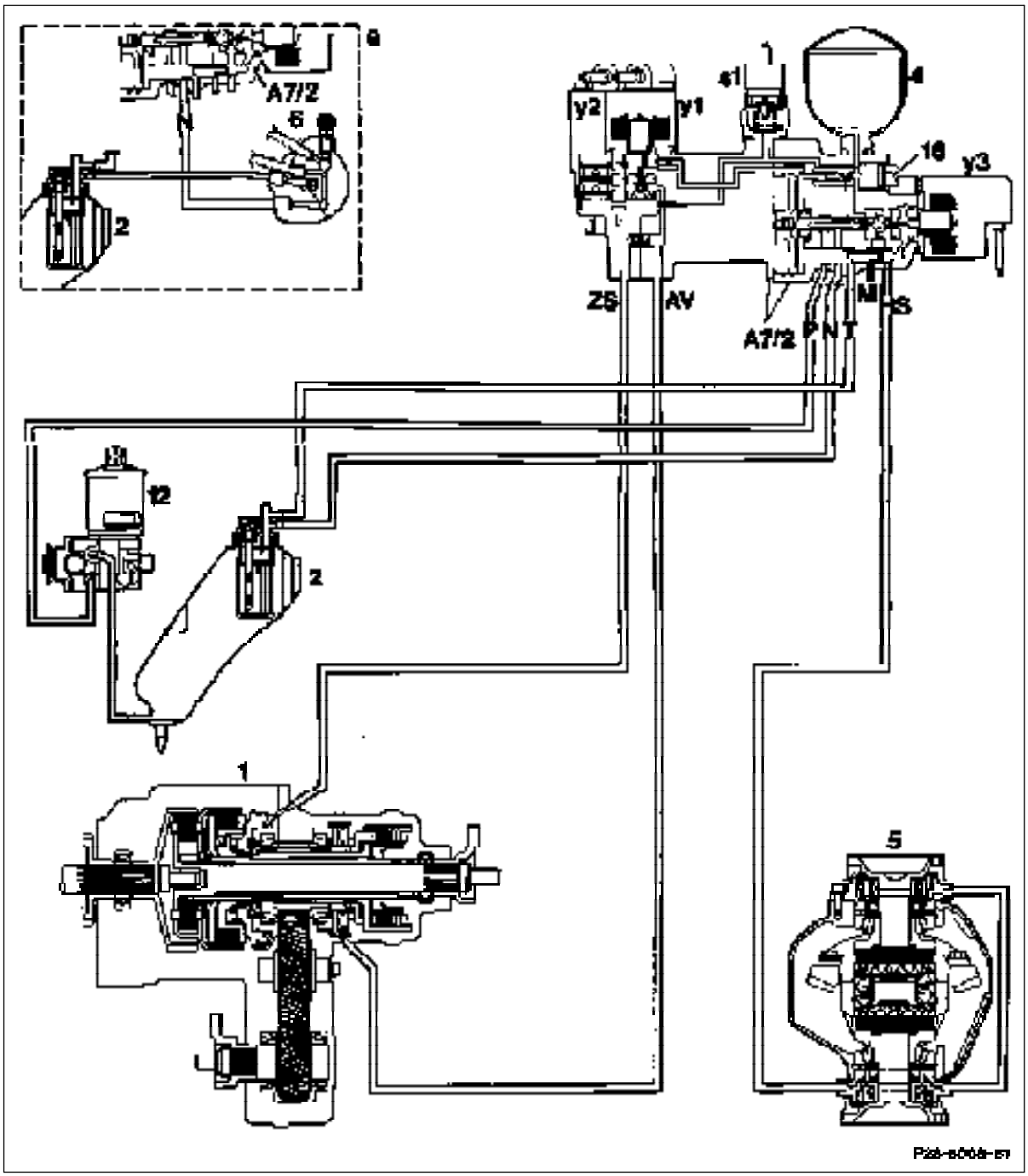

1	Transfer case
2	Oil reservoir
4	Pressure reservoir
5	Rear axle differential
6	Level controller
12	Pressure oil pump
16	Pressure relief plug
A7/2	4MATIC valve control unit
A7/2s1	Oil pressure switch
A7/2y1	Front axle drive train valve
A7/2y2	Center differential lock valve
A7/2y3	Rear axle differential lock valve
AV	Front axle drive train
HS	Rear axle differential lock
ZS	Center differential lock
M	Measurement connection with sealing plug
N	Return to oil reservoir or level controller
T	Return to oil reservoir
P	Pressure oil
a	Location in the case of level control

Copyright DaimlerChrysler AG 30.07.2008 CD-Ausgabe G/08/04 . This WIS print-out will not be recorde d by Modification services.

Function of hydraulic system

The hydraulic system comprises the following components:

- Oil reservoir (2)
- Pressure oil pump (12)
- Service valve (15, production up to 05/91)
- 4MATIC valve control unit (A7/2)

The pressure oil pump (12) delivers oil from the oil reservoir (2) to the connection Po on the service valve (15).

In the operating position of the service valve, the oil flows to the connection of the pressure line P on the 4MATIC valve control unit (A7/2).

The accumulator charging valve (a) holds the system pressure in the pressure reservoir (4) between approx. 25 and approx. 36 bar.

The front axle drive train (AV), center differential lock (ZS) and rear axle differential lock (HS) valves (A7/2y1, 2, 3) are controlled by the electronics. Via them, the multi-disk clutches in the transfer case (1) and the ring cylinders on the rear axle differential (ASD) (5) are subjected to system pressure.

Where:

A7/2y1	Front axle drive train valve
A7/2y2	Center differential lock valve
A7/2y3	Rear axle differential lock valve

If the accumulator (4) is full, the delivered oil flows back to the service valve (15) via line N from the 4MATIC valve control unit (A7/2). On vehicles with level control, the level controller (6) is connected to line N.

The pressure limiting valve (15a) in the service valve (15) ensures a residual pressure of approx. 5 bar in line N. In this way the contact pressure of the multi-disk clutch of the front axle drive train (AV) in the transfer case (1) of 1.3 bar can be prepared in any ready to operate condition.

The further return from the service valve (15) to the oil reservoir (2) takes place via the line To.

Oil from the 4MATIC valve control unit (A7/2) flows back via the return line T when:

- the pressure reduces in the multi-disk clutches,
- the pressure limiting valve (b) in the 4MATIC valve control unit (A7/2) opens.

If the service valve (15) is in the test position, oil flows from connection Po immediately to the oil reservoir (2) via line T1. Simultaneously the system pressure is reduced via lines M and To.

Copyright DaimlerChrysler AG 30.07.2008 CD-Ausgabe G/08/04 . This WIS print-out will not be recorde d by Modification services.

Oil reservoir
The plastic oil reservoir (arrow) is located in the front left of the engine compartment.

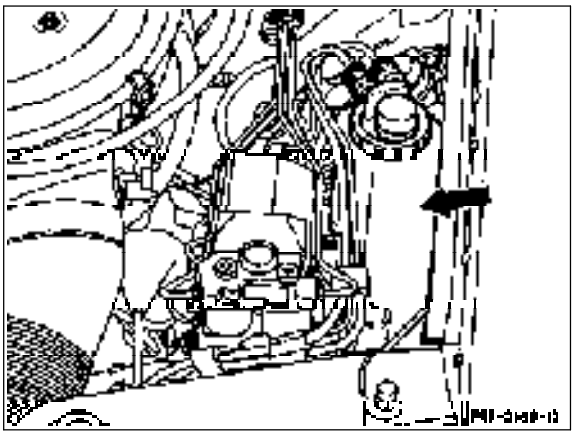

The oil reservoir (2) has connection pieces for:
- the suction line of pressure oil pump (A), and
- the return line from the service valve (To) and
- the return line from the 4MATIC valve control unit (A7/2) (T).
  The returning oil is cleaned by the filter element (2h).

The sealing plug (2a) has an oil dipstick with "MIN" and "MAX" markings for the oil level check.

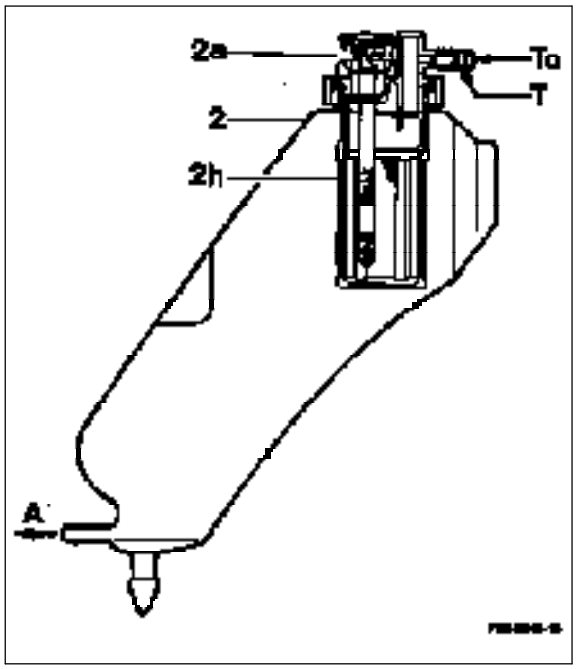

2a	Sealing plug
2h	Filter element
A	Suction line of pressure pump
T	Return line from the 4MATIC valve control unit (A7/2)
To	Return line from service valve

Pressure oil pump
The engine drives the pressure oil pump. This supplies the hydraulic system with pressure oil.

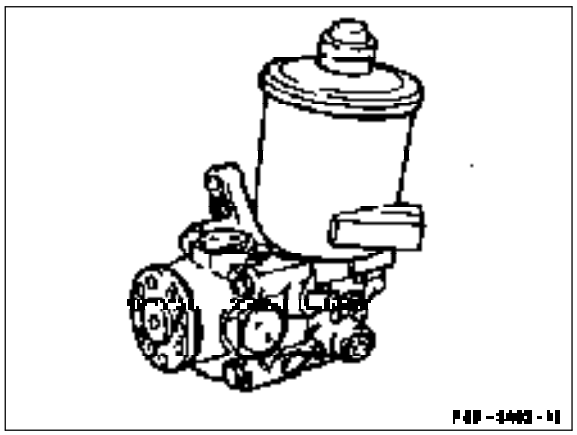

Copyright DaimlerChrysler AG 30.07.2008 CD-Ausgabe G/08/04 . This WIS print-out will not be recorde d by Modification services.

Service valve (up to transfer case no. 26 616)
The service valve is attached at the front right wheelhouse. The 4MATIC can be rendered inoperative with the service valve. By relocating the lever into test position (A) the complete hydraulic system is switched to a depressurized condition.

A Test position
B Operating position

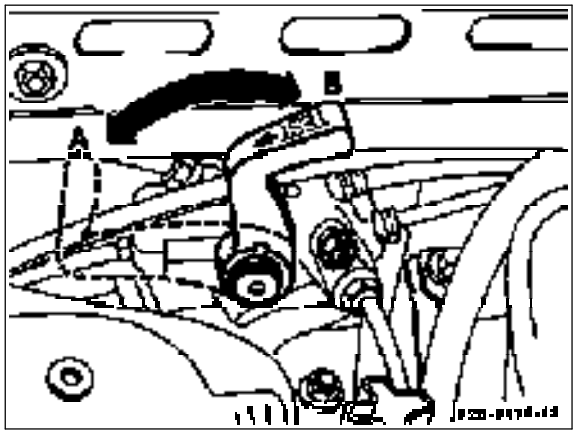

As of transfer case no. 26 617 the previous service valve for switching off the system has been replaced by an electrical normal operation/service selection switch (S7/3). The selection switch is located on the inside of the components compartment panel on the right.
To switch off the system, the coding plug must be withdrawn and reinserted in "Test" position. The ASD/4MATIC warning lamp comes on and indicates that the system has been rendered inoperative.

⚠
To insert the coding plug in the "function" position, switch off ignition, otherwise the ASD/4MATIC warning lamp does not go out.

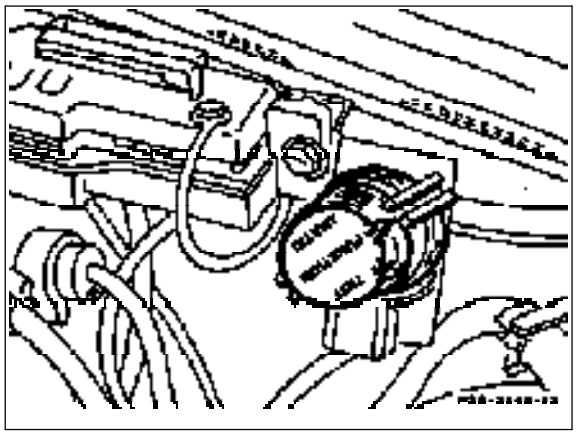

As of transfer case no. 26 617 the accumulator pressure must be relieved at the pressure relief screw (16) to switch the hydraulic system to a depressurized condition.

M Measuring connection with sealing plug

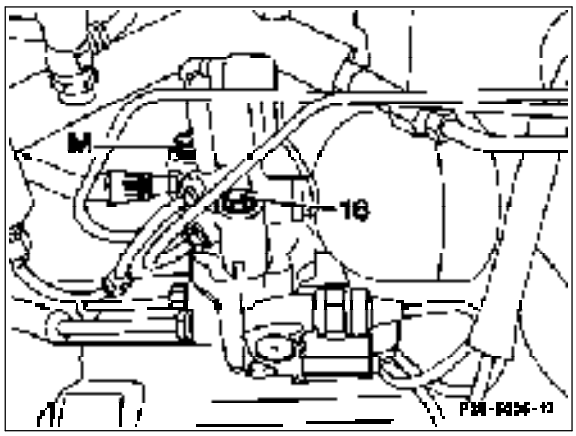

Copyright DaimlerChrysler AG 30.07.2008 CD-Ausgabe G/08/04 . This WIS print-out will not be recorde d by Modification services.

In operating position (B) the pressure oil is supplied from connection (Po) through the rotary-disk valve (15b) and via the line (P) of the valve control unit.

The pressure limiting valve (15a) holds a pressure of approx. 5 bar in the line (N).

The connection (Mo) is connected to the accumulator of the 4MATIC valve control unit (A7/2) via the lines P and M. Thus the system pressure (pressure at accumulator) can be checked by pressure testing at connection (Mo).

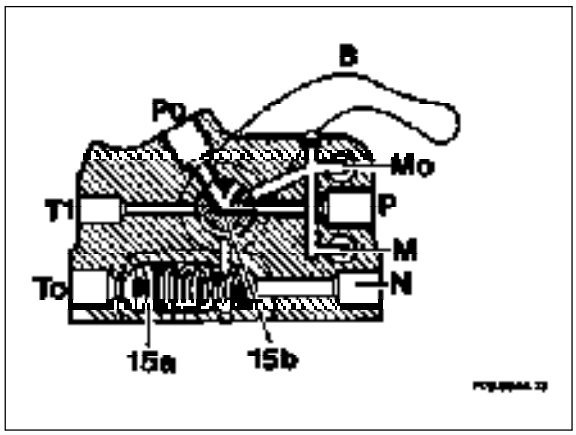

15a	Pressure limiting valve (5 bar)
15b	Rotary-disk valve
M	Return line from 4MATIC valve control unit (A7/2)
Mo	Measuring connection - system pressure
N	Return line from 4MATIC valve control unit (A7/2) and level controller
P	Pressure line to 4MATIC valve control unit (A7/2)
Po	Connection of pressure line from pressure oil pump
T1	Return line to oil reservoir
To	Return line to oil reservoir

In test position (A) the rotary-disk valve (15b) connects the connection (Po) to the return line (T1). The pressure oil delivered from the pressure oil pump flows back directly into the oil reservoir via the service valve thus interrupting the pressure oil supply for the level control system. Simultaneously the pressure line (P) is connected to the return line (To) to the oil reservoir via a groove on the rotary-disk valve (15b). In the test position, the rotary-disk valve opens the check valve (15c), the contents of the accumulator flow through a ring gap on the rotary-disk valve (15b) into the return line (To) via the return line (M). Thus the pressure in the complete hydraulic system is reduced.

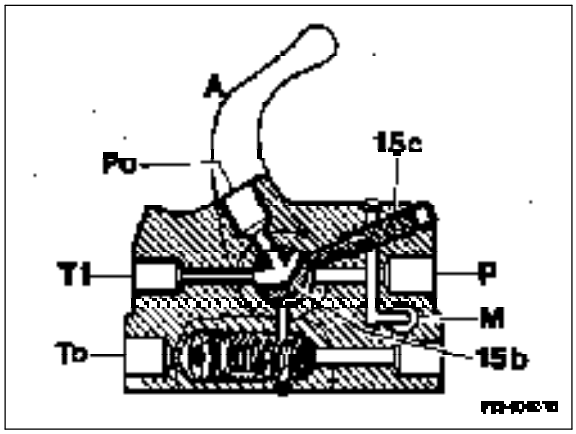

15b	Rotary-disk valve
15c	Check valve
M	Return line from 4MATIC valve control unit (A7/2)
P	Pressure line to 4MATIC valve control unit (A7/2)
Po	Connection of pressure line from pressure oil pump
T1	Return line to oil reservoir
To	Return line to oil reservoir

Copyright DaimlerChrysler AG 30.07.2008 CD-Ausgabe G/08/04 . This WIS print-out will not be recorde d by Modification services.

4MATIC valve control unit (A7/2)
The 4MATIC valve control unit (A7/2) is located on the rear right of the frame floor under a plastic cover (arrow).

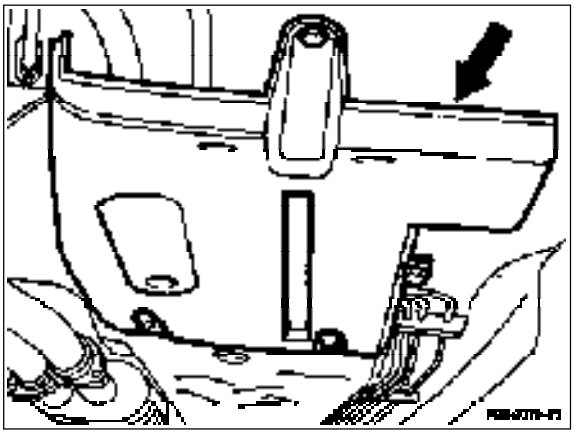

The connection points for the lines are identified by cast letters on the 4MATIC valve control unit (A7/2).

Where:
AV - Front axle drive train
ZS - Center differential lock
HS - Rear axle differential lock
M - Measuring connection (service valve)
N - Return via service valve/level controller
T - Return to oil reservoir
P - Pressure oil

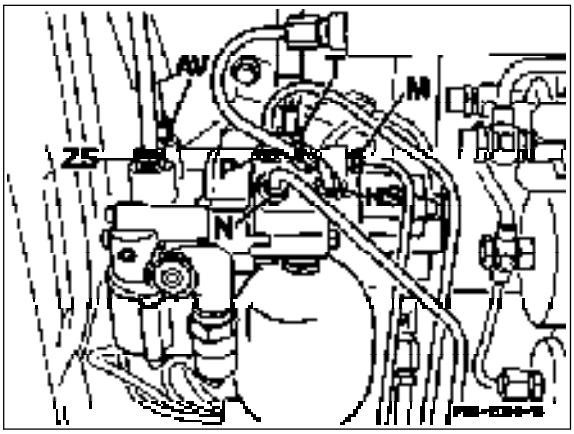

Copyright DaimlerChrysler AG 30.07.2008 CD-Ausgabe G/08/04 . This WIS print-out will not be recorde d by Modification services.

Design of 4MATIC valve control unit (up to transfer case no. 26 616)

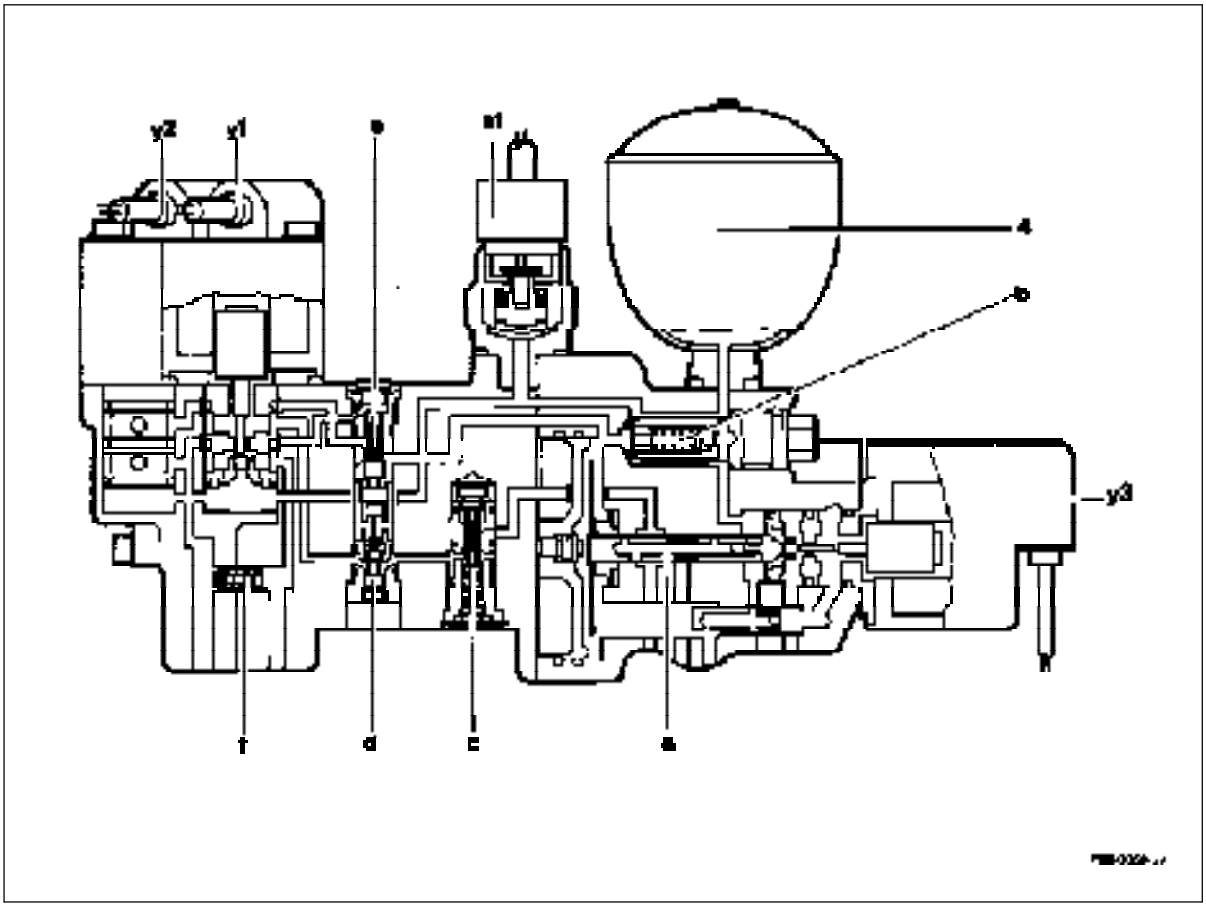

4	Accumulator	a	Accumulator charging valve
s1	Oil pressure switch (5 bar)	b	Pressure limiting valve
y1	Front axle drive train valve	c	Oil flow limiting valve
y2	Center differential lock valve	d	Pressure regulator
y3	Rear axle differential lock valve	e	Pressure-dependent orifice
		f	Check valve

Copyright DaimlerChrysler AG 30.07.2008 CD-Ausgabe G/08/04 . This WIS print-out will not be recorde d by Modification services.

Design of 4MATIC valve control unit (as of transfer case no. 26 617)

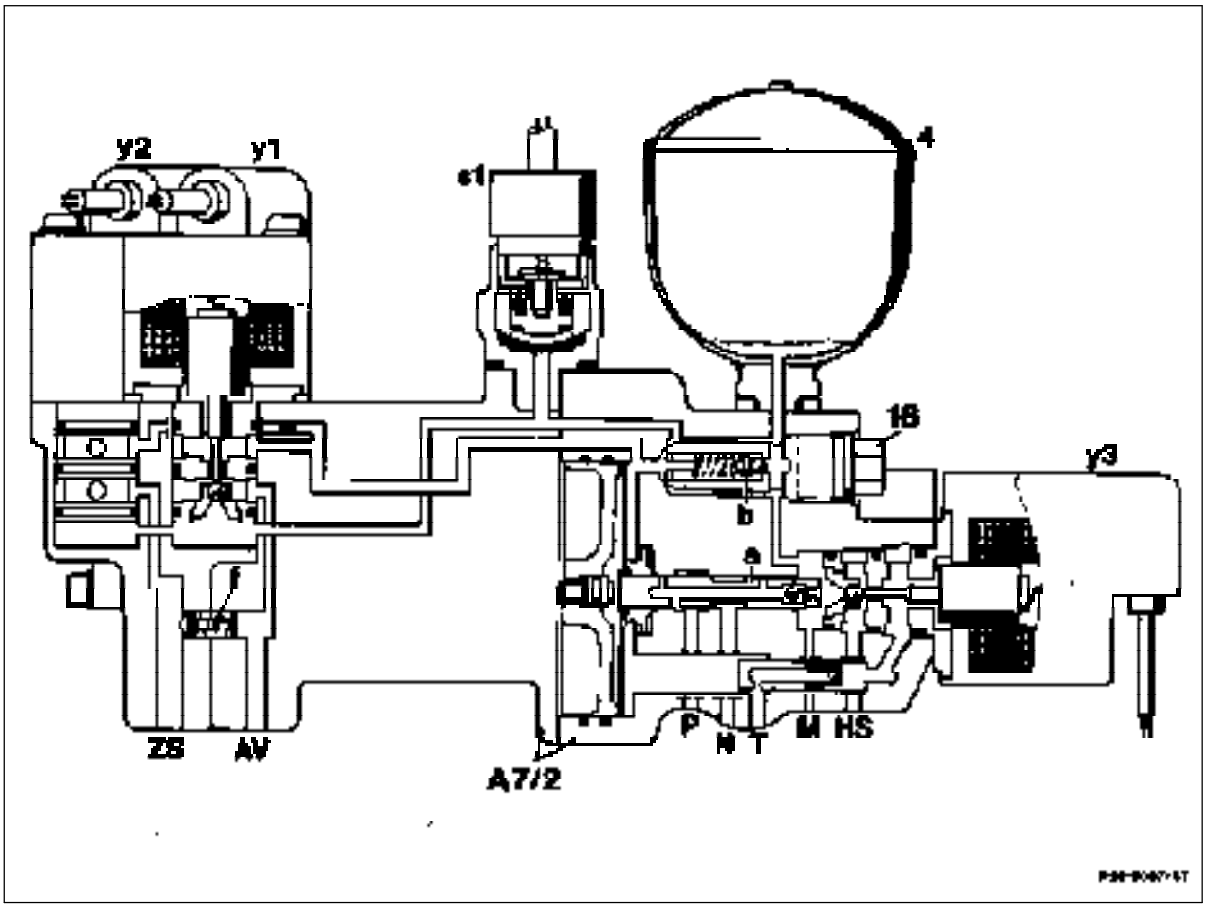

4	Accumulator	ZS	Center differential lock
16	Pressure relief plug	M	Measuring connection with sealing plug
A7/2	4MATIC valve control unit	N	Return to oil reservoir or level controller
A7/2s1	Oil pressure switch	T	Return to oil reservoir
A7/2y1	Front axle drive train valve	P	Pressure oil
A7/2y2	Center differential lock valve	a	Accumulator charging valve
A7/2y3	Rear axle differential lock valve	b	Pressure limiting valve
AV	Front axle drive train	f	Check valve
HS	Rear axle differential lock		

The measuring connection (M) which was previously located on the service valve is now on the 4MATIC valve control unit (A7/2).

Copyright DaimlerChrysler AG 30.07.2008 CD-Ausgabe G/08/04 . This WIS print-out will not be recorde d by Modification services.

Accumulator (4)
System pressure is stored in the accumulator (4). The accumulator volume is approx. 350 cm3. There is a pressure of approx. 21 bar in the gas compartment filled with nitrogen (b). At a system pressure (25 to 36 bar) this results in a working volume of approx. 40 cm 3 in the oil compartment (a).

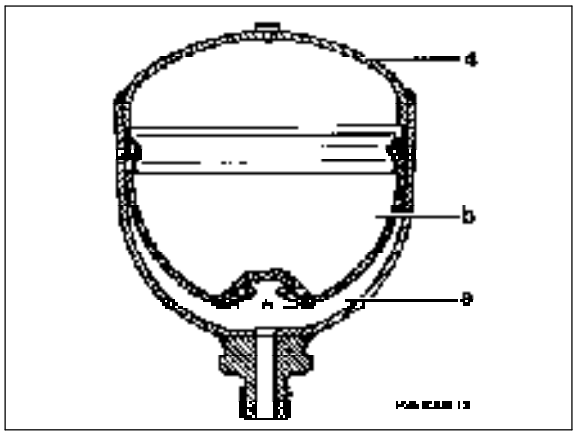

4 Accumulator
a Oil compartment
b Gas compartment

Oil pressure switch (A7/2s1)
If the pressure drops below 5 bar, the oil pressure switch (A7/2s1) switches ground to 4MATIC control unit (N30/3), which switches off the 4MATIC. This is indicated when the 4MATIC warning lamp (A1e24) comes on.

Solenoid valves - AV, ZS, HS (A7/2y 1, 2, 3)
The 3 solenoid valves are located in the 4MATIC valve control unit (A7/2).

They act as 2-way valves. If there is no voltage at the solenoid valve (A7/2y), the hydraulic line from the respective multi-disk clutch (AV, ZS and HS) is connected to the oil reservoir by the return line (T). The oil pressure in the clutch is reduced.

If the solenoid valve is supplied with voltage when the system engages, the magnet core (a) is moved against the force of the spring (b). The system pressure opens the ball valve (c) and acts on the multi-disk clutch, and simultaneously the return line (T) is sealed by the ball valve.
If the solenoid valve is switched off, the spring force presses the magnet core (a) back into its initial position, thus the ball valve opens the return line (T) and seals the supply line from the accumulator (P).

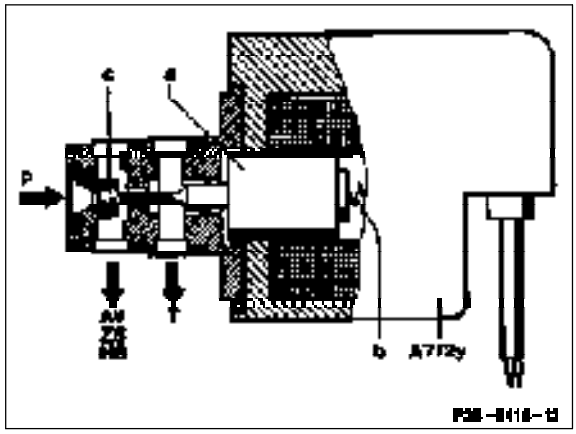

A7/2y	Solenoid valve
AV, HS, ZS	Hydraulic line from the respective multi-disk clutch
P	Supply line from pressure reservoir
T	Return
a	Magnet core
b	Spring
c	Ball valve

Copyright DaimlerChrysler AG 30.07.2008 CD-Ausgabe G/08/04 . This WIS print-out will not be recorde d by Modification services.

Accumulator charging valve (a)
The accumulator charging valve (a) controls the pressure in the accumulator between approx. 25 and 36 bar.

Pressure limiting valve (b)
The pressure limiting valve (b) prevents the accumulator pressure rising above 38 bar.

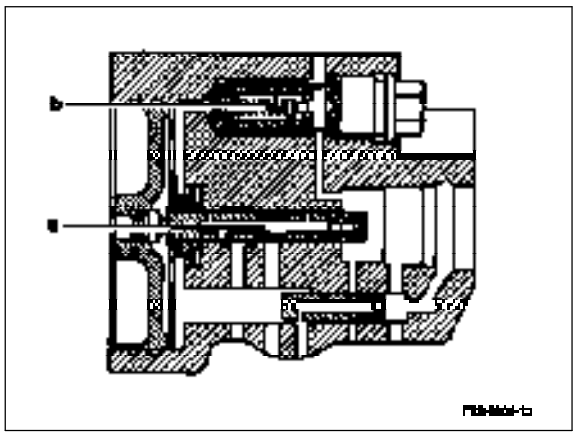

a Accumulator charging valve
b Pressure limiting valve

Oil flow limiting valve and pressure regulator (production up to 05/91)
The multi-disk stack of the multi-disk clutch for the front axle drive train (AV) is pre-loaded with the contact pressure of 1.3 bar. In this way a rapid and gentle engagement of shift stage 1 is achieved.

Pressure-dependent orifice (production up to 05/91)
The pressure-dependent orifice allows a rapid but at the same time gentle power transmission through the multi-disk clutch of the central locking differential.

It modulates the shift pressure as a function of system pressure.

Above 22 bar: rapid pressure reduction.
Below 22 bar: slow pressure reduction.

Check valve
The check valve fulfils a safety function. If no pressure builds up in the multi-disk clutch of the front axle drive train (AV), the check valve prevents a pressure build up in the multi-disk clutch of the center differential lock (ZS). This prevents an interruption of the power flow and overspeeding of the engine.

Testing hydraulic system
Refer to Diagnosis Manual Chassis Volume 2 - 8.1, 4MATIC.

Copyright DaimlerChrysler AG 30.07.2008 CD-Ausgabe G/08/04 . This WIS print-out will not be recorde d by Modification services.

Copyright DaimlerChrysler AG 30.07.2008 CD-Ausgabe G/08/04 . This WIS print-out will not be recorde d by Modification services.

28-050 Mechanical

Mechanical components

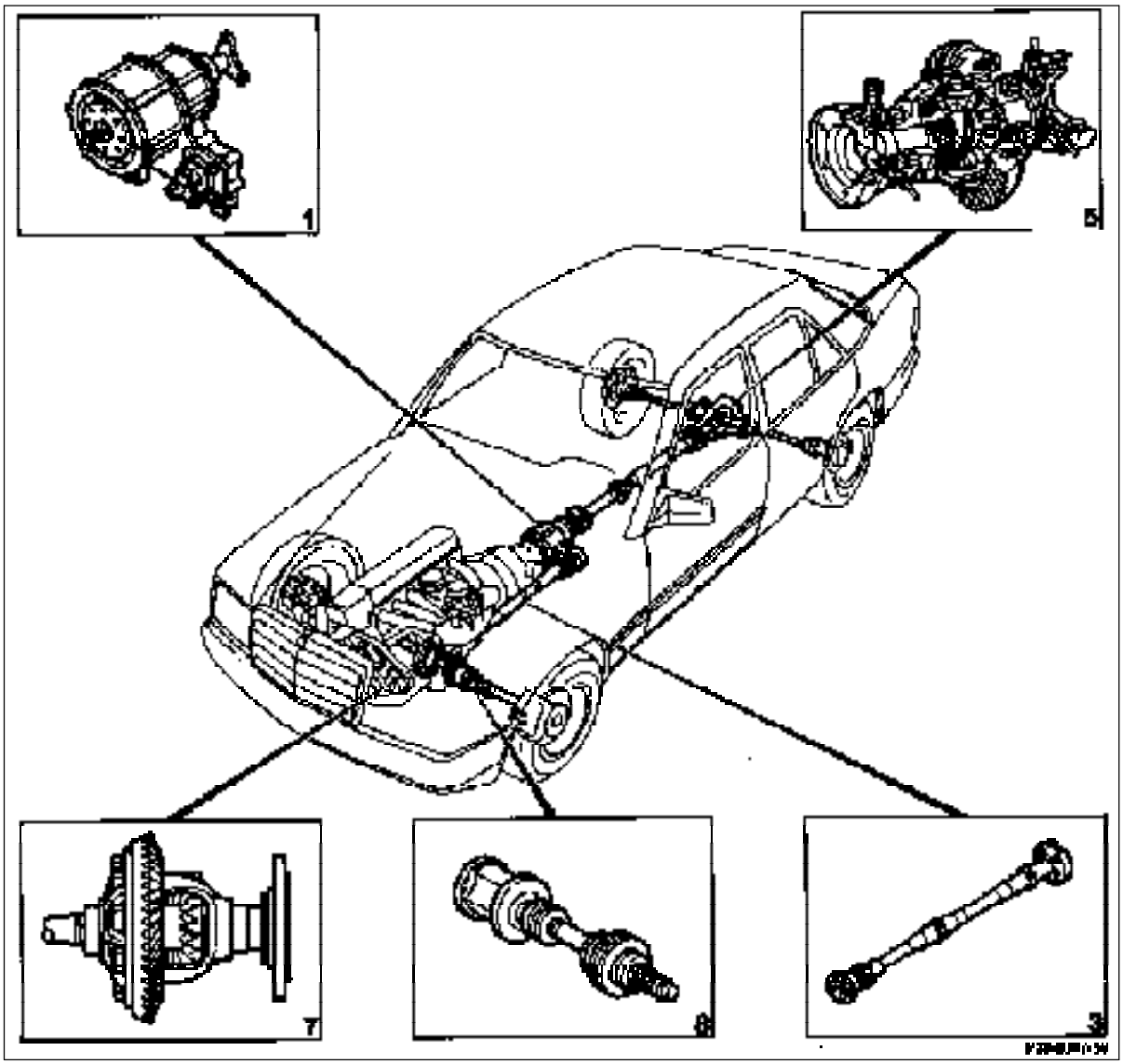

1	Transfer case	7	Front axle differential
3	Front-wheel drive propeller shaft	8	Front axle shaft
5	Rear axle differential (ASD)		

Copyright DaimlerChrysler AG 30.07.2008 CD-Ausgabe G/08/04 . This WIS print-out will not be recorde d by Modification services.

Function of mechanical components
Transfer case
The transfer case distributes the power flow to the front and rear axle. There are two versions:
For models with manual transmission: transfer case with long rear cover (arrow).

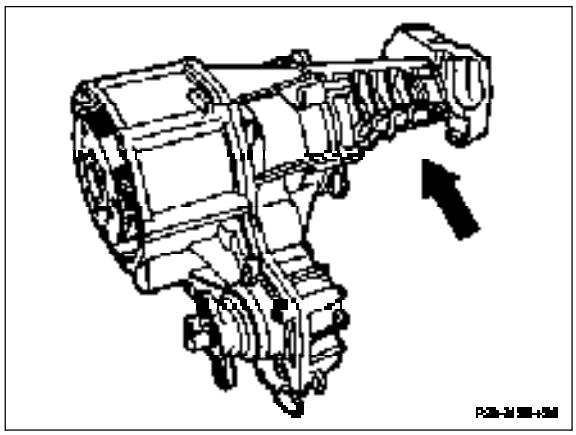

For models with automatic transmission: transfer case with short rear cover (arrow).

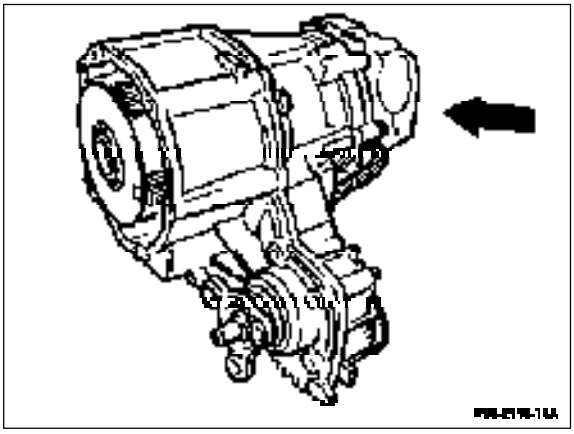

Note
As of transfer case no. 7 013 a center differential (2) with modified teeth (straight) has been installed in the transfer case. At the same time, the manual and automatic transmissions are fitted with a suitably modified internally-geared wheel (1).

As of transfer case no. 18 640, an helically geared planetary gear train (center differential and internally-geared wheel) has been installed on vehicles with automatic transmission.

For models 124.333 and 124.393:
Transfer case with short cover and 4-arm joint flange.

For description of shift processes, refer to section on power distribution in this chapter.

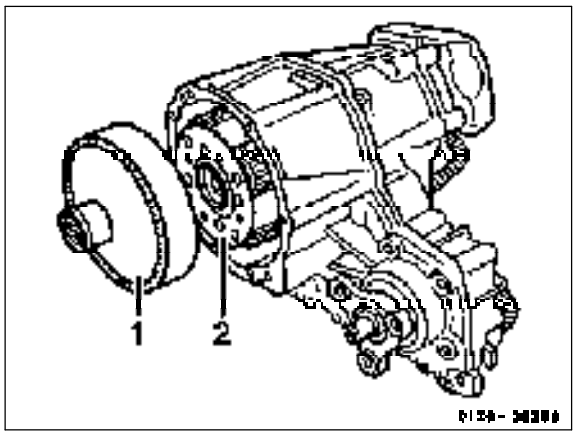

Copyright DaimlerChrysler AG 30.07.2008 CD-Ausgabe G/08/04 . This WIS print-out will not be recorde d by Modification services.

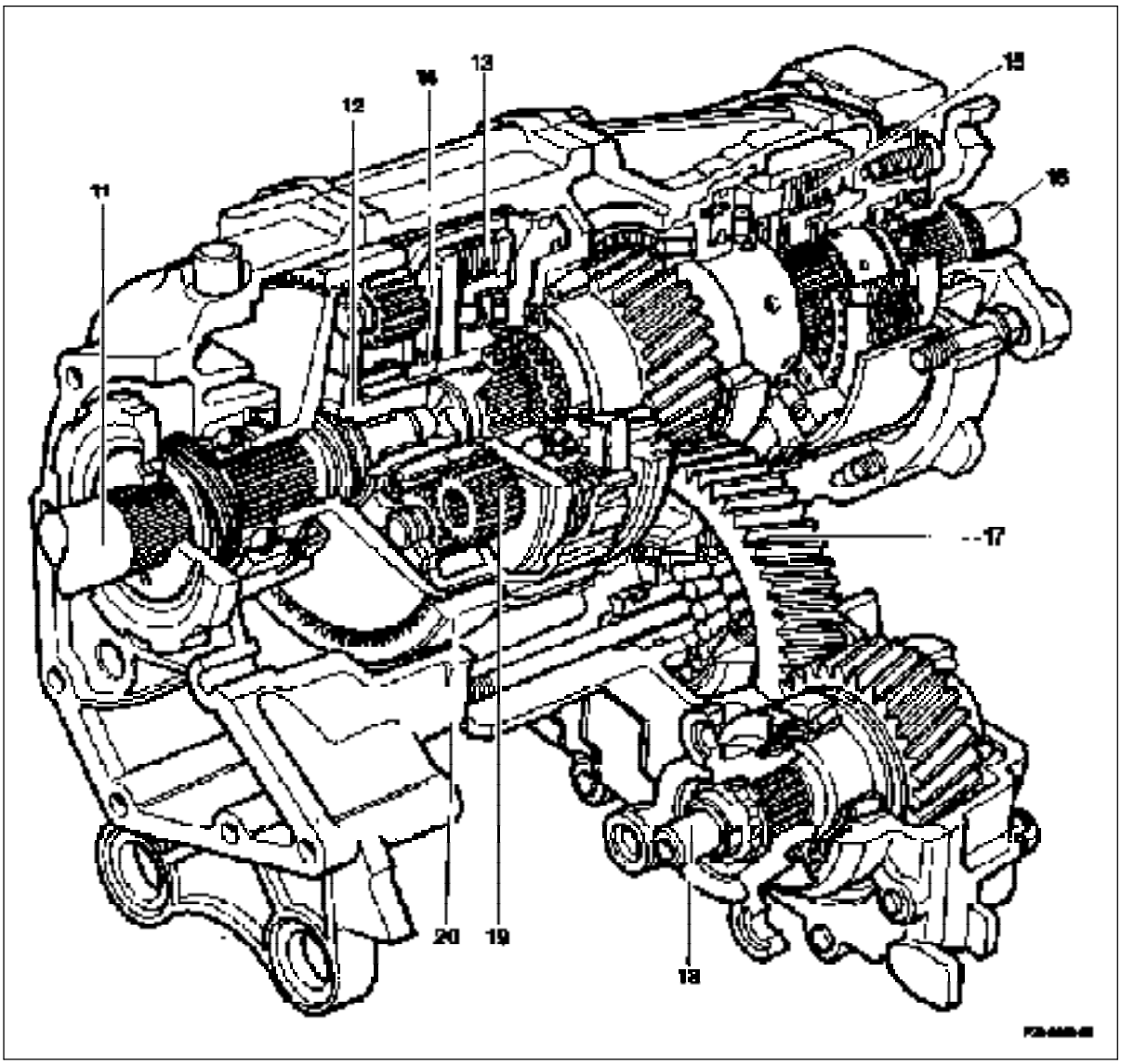

11	Transmission output shaft
12	Center differential
13	Multi-disk clutch - center differential lock (ZS)
14	Diaphragm spring
15	Multi-disk clutch - front axle drive train (AV)
16	Drive shaft - rear axle drive train
17	Auxiliary drive
18	Auxiliary drive shaft - front axle drive train
19	Planet gears - center differential
20	Internal-geared wheel - center differential

Center differential (12)

Drive moment reaches from the transmission output shaft (11) via toothing to the internal-geared wheel of the center differential (20). The planetary gear train of the center differential (12) distributes the drive moment to the front and rear wheels depending on the shift condition of the multi-disk clutches of the center differential lock (ZS) (13) and front axle drive train (AV) (15).

Multi-disk clutch of center differential lock (ZS) (13)

The multi-disk clutch of center differential lock (ZS) (13) brakes the planet carrier of the center differential (12), so this is directly driven by the internal-geared wheel. The planet carrier is connected rigidly to the output shaft of the rear axle drive train (16).

Copyright DaimlerChrysler AG 30.07.2008 CD-Ausgabe G/08/04 . This WIS print-out will not be recorde d by Modification services.

The multi-disk clutch is held in the closed position (engaged by friction) by a stiff diaphragm spring (14). It is released by oil pressure.

Through this design of multi-disk clutch it is ensured that the vehicle can be driven by rear-wheel drive even in the event of a fault.

Multi-disk clutch, front axle drive train (AV) (15)

The multi-disk clutch for the front axle drive train (AV) (15) is closed by oil pressure. In this way the drive moment is led to the auxiliary drive (17).

Front-wheel drive and oil supply

The transfer case has its own oil supply for lubrication and heat transfer.

The two gears (lower) for power transmission to the front-wheel drive also operate as an oil pump. They supply the oil from the oil pan beneath the auxiliary drive through an outer oil line on the transfer case to the bearing points and to lubricate the multi-disk clutches.

Propeller shaft to front-wheel drive

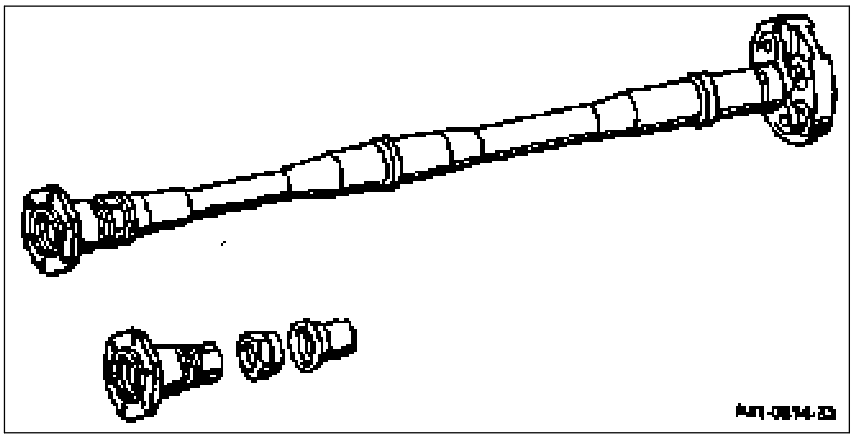

The propeller shaft connects the transfer case to the front axle differential.

The length of the propeller shaft differs for manual and automatic transmission.

It is secured on the transfer case by a flexible disk and on the front axle differential by a sliding part for the length differential.

Copyright DaimlerChrysler AG 30.07.2008 CD-Ausgabe G/08/04 . This WIS print-out will not be recorde d by Modification services.

Front-wheel drive

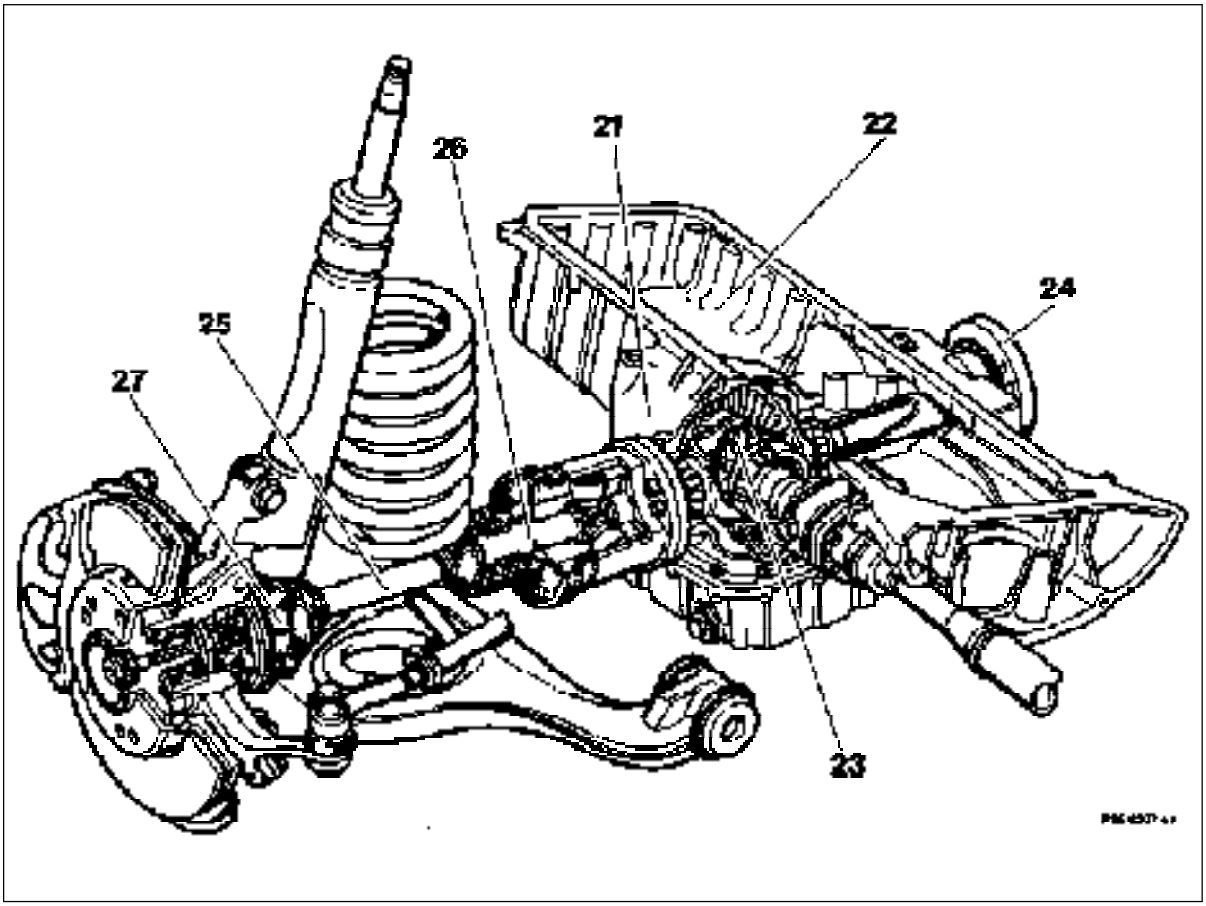

21	Front axle casing	25	Front axle shaft
22	Engine oil pan	26	Inner joint
23	Wheel set with differential	27	Outer joint
24	Connecting flange		

The front axle casing (21) and the engine oil pan (22) form one unit. The front axle casing contains the gear set with differential (23). The oil compartments are separated from the differential and engine. The shaft to the right connecting flange (24) leads through the engine oil pan and is partitioned off at this oil compartment by a protecting tube. The front axle shafts (25) have a different length on the left and the right. The inner joint (26) is a sliding joint (tripod joint), which compensates for axial displacements and angle changes during suspension compression. The outer joint (27) is a rigid joint (Rzeppa joint), which permits steering lock and jount changes; in addition this joint secures the front axle shaft in the axial direction. The damper strut front axle has been retained in principle. Parts of the wheel control have been revised for front-wheel drive. Two of the lower coils on the front springs are fully extended. The front axle shafts lead to the front wheels through the resultant space.

Copyright DaimlerChrysler AG 30.07.2008 CD-Ausgabe G/08/04 . This WIS print-out will not be recorde d by Modification services.

Automatic locking differential of rear axle (ASD)

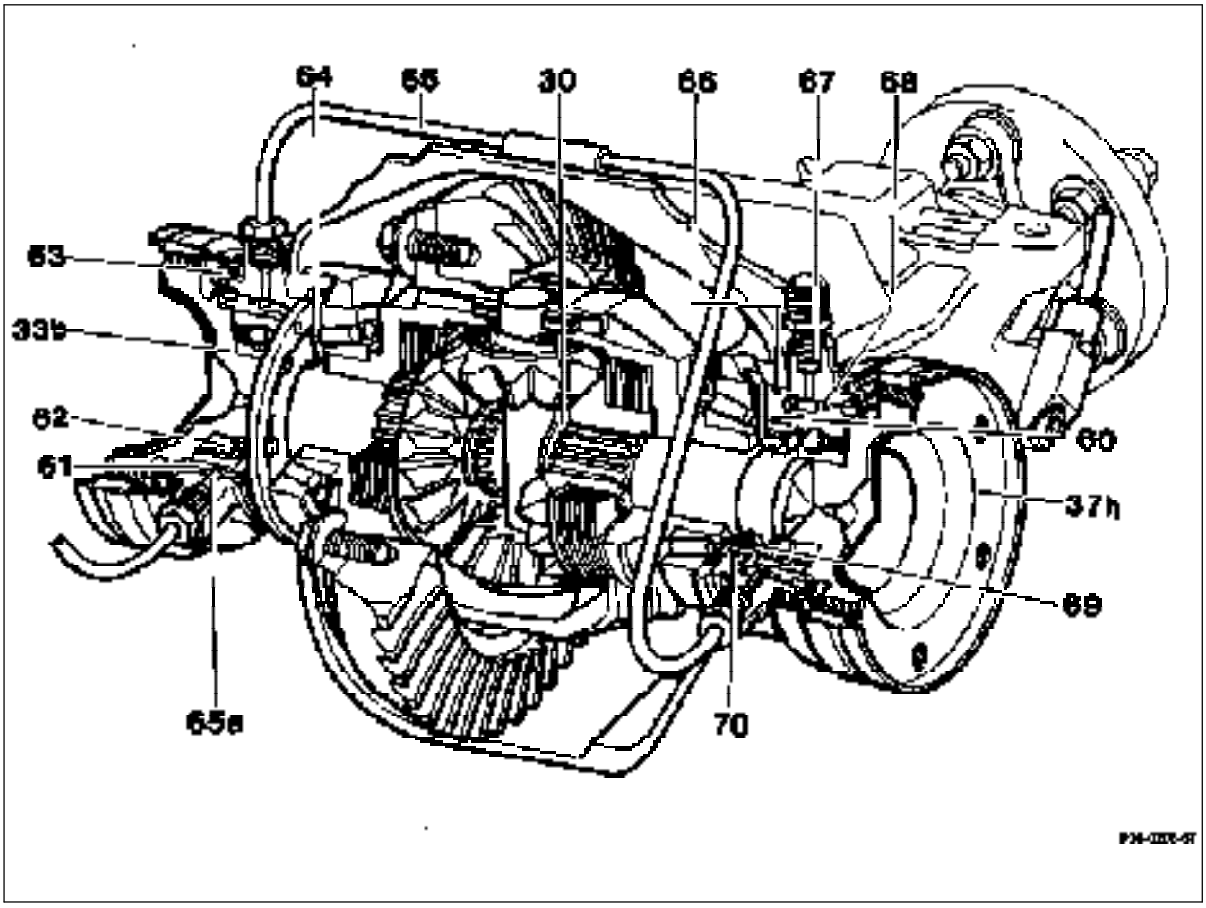

30	Circlip
33b	Connecting flange
37h	Closing plate for H shaft
60	Ring cylinder
61	Annular piston
62	Grooved ball bearing
63	Cup seal
64	Oil baffle
65	Hydraulic line
65a	Clamping sleeve
66	O-ring (80 x 2)
67	Breather
68	O-ring (72 × 3)
69	Radial sealing ring
70	O-ring (63 × 2,5)
71	Rear axle casing
72	Multi-disk stack

Copyright DaimlerChrysler AG 30.07.2008 CD-Ausgabe G/08/04 . This WIS print-out will not be recorde d by Modification services.

O-rings (66) provide the sealing between the rear axle casing (71) and ring cylinders (60). The connecting flanges (33b) are sealed in the ring cylinders (60) via radial sealing rings (69). The grooved ball bearings (62) in the annular pistons (61) are sealed laterally and filled with long-life lubricant.

To ensure a reliable oil supply to the taper roller bearings of the differential and the connecting flange (33b) in the differential, an oil baffle (64) is installed on each side.

Connecting flange (33b)

The connecting flange (33b) had to be extended due to accommodating the grooved ball bearing (62) in the ring cylinder. The grooved ball bearing is pressed on to the connecting flange (33b).

Rear axle shaft

The rear axle shafts are shorter than on vehicles without ASD due to the arrangement of the ring cylinders and connecting flange.

Ring cylinder (60)

The ring cylinders (60) are secured laterally on the rear axle casing (71) with two M8 hexagon socket bolts. The annular piston (61) is sealed at the ring cylinder housing by two O-rings (68 and 70). To protect against dust and moisture, the annular piston (61) is protected at the ring cylinder housing by a pressed-on cup seal (63).

Method of operation of ring cylinders (60):

By applying hydraulic pressure to the annular piston (61) in the ring cylinders (60), the two annular pistons (61) move upwards simultaneously. The resultant force is transmitted to the differential side gears via the grooved ball bearing (62), connecting flange (33b) and the circlips (33) and compresses the multi-disk stack (72).

Copyright DaimlerChrysler AG 30.07.2008 CD-Ausgabe G/08/04 . This WIS print-out will not be recorde d by Modification services.

Power flow distribution

Shift stage 0 - rear-wheel drive

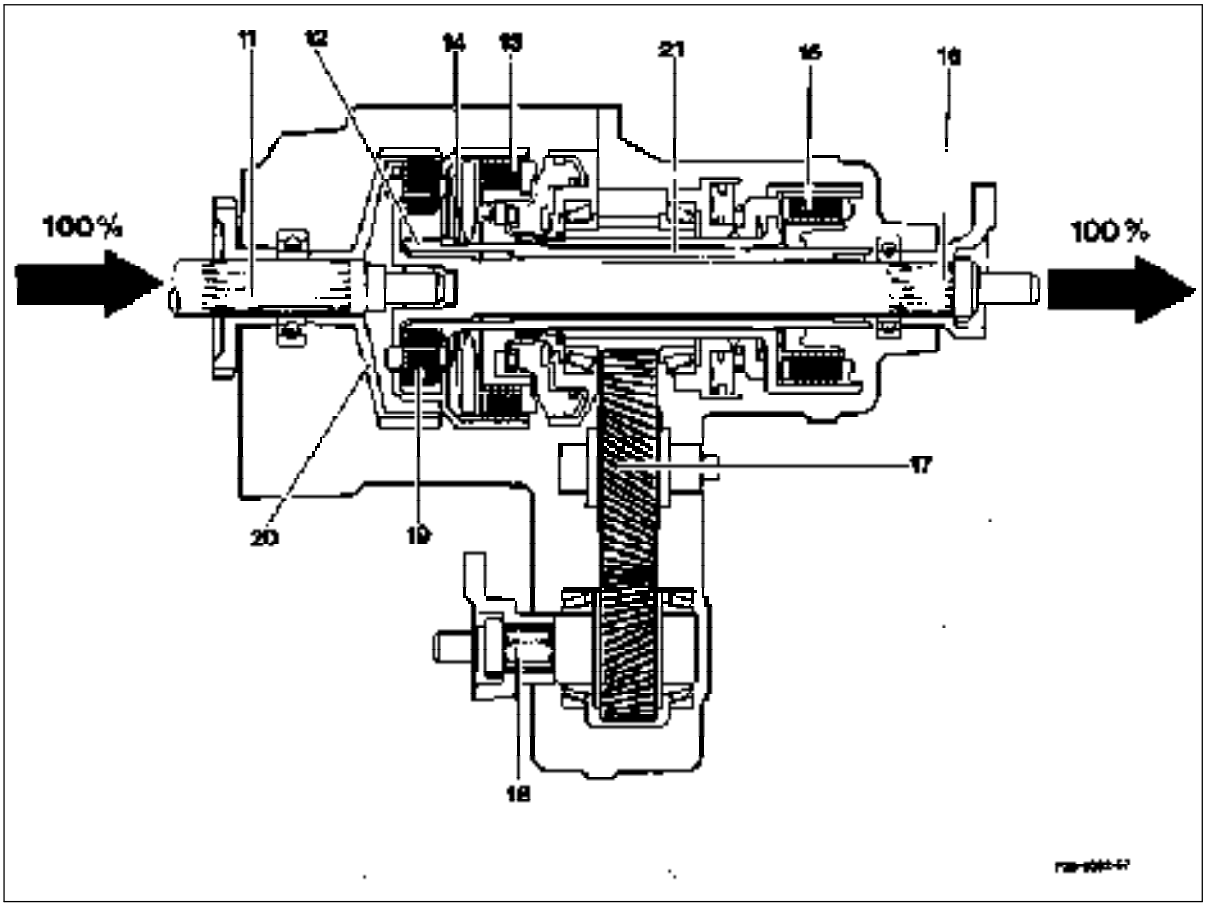

11	Transmission output shaft	16	Output shaft, rear axle drive train
12	Center differential	17	Auxiliary drive
13	Multi-disk clutch - center differential lock (ZS)	18	Auxiliary drive shaft, front axle drive train
14	Diaphragm spring	19	Planet gears - center differential
15	Multi-disk clutch - front axle drive train (AV)	20	Internal-geared wheel, center differential
		21	Intermediate shaft

The multi-disk clutch of the center differential lock (ZS) (13) is closed. In this way the planet carrier is connected to the sun gear and the differential is locked. The planet gears of the center differential (19) circulate without differential movement. The entire drive output is transmitted to the output shaft of the rear axle drive train (16), to which the planet carrier is rigidly connected.

The multi-disk clutch of the front axle drive train (AV) (15) is released, thus the intermediate shaft (21) connected to the sun gear cannot transmit any torque to the auxiliary drive shaft of the front axle drive train (18). A pilot pressure of approx. 1.3 bar on the multi-disk clutch of the front axle drive train (AV) (15) ensures a rapid operation when the multi-disk clutch is engaged.

Copyright DaimlerChrysler AG 30.07.2008 CD-Ausgabe G/08/04 . This WIS print-out will not be recorde d by Modification services.

Shift stage 1 - compensated four-wheel drive

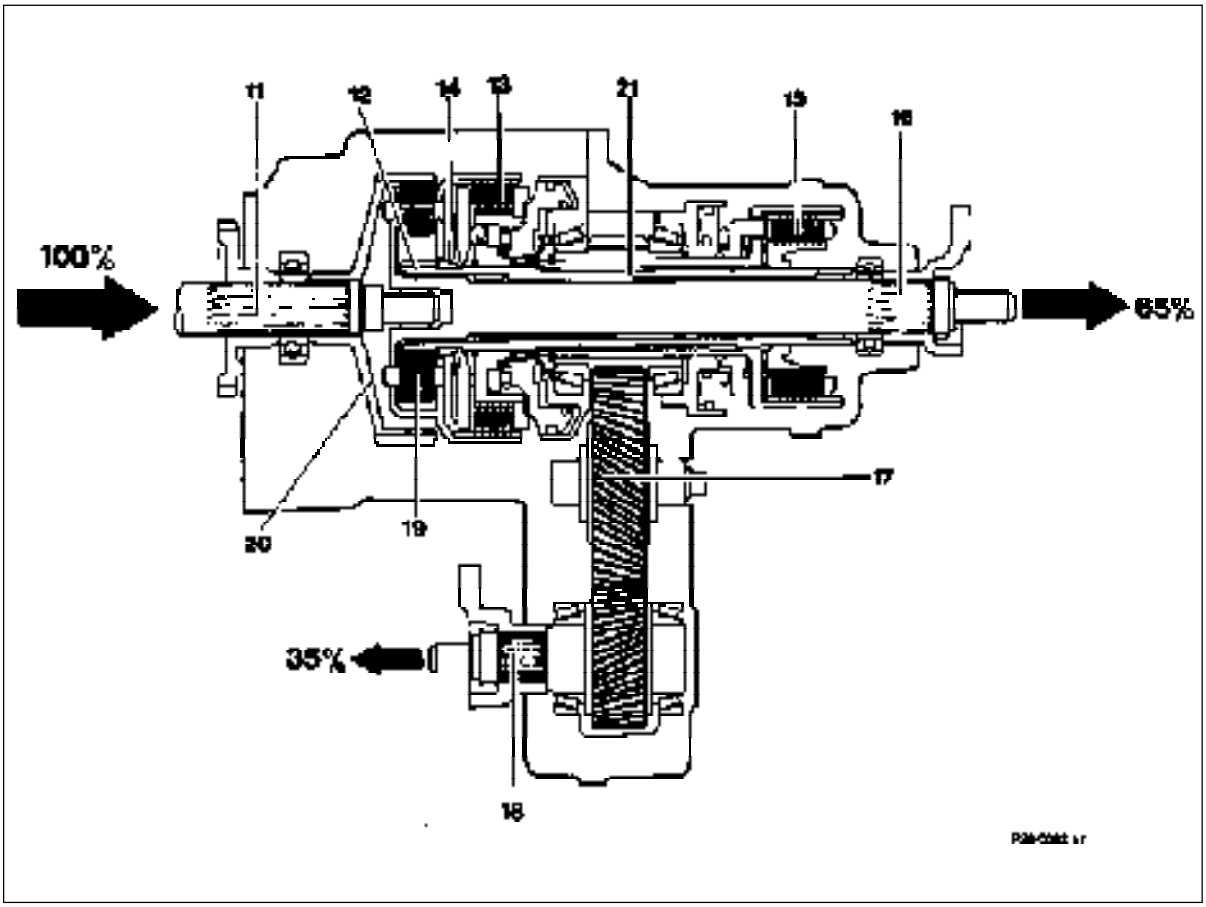

11	Transmission output shaft
12	Center differential
13	Multi-disk clutch - center differential lock (ZS)
14	Diaphragm spring
15	Multi-disk clutch - front axle drive train (AV)
16	Output shaft, rear axle drive train
17	Auxiliary drive
18	Auxiliary drive shaft, front axle drive train
19	Planet gears - center differential
20	Internal-geared wheel, center differential
21	Intermediate shaft

The multi-disk clutch of the center differential lock (ZS) (13) is open. The planet gears of the center differential (19) are free and can act as a differential. The multi-disk clutch of the front axle drive train (AV) (15) is closed and the drive moment reaches the auxiliary drive (17) via the intermediate shaft (21). The drive moment is branched via the center differential (12). The ratio is selected so that in the case of compensated four-wheel drive, 65% of the drive output is transmitted to the rear-wheel drive and 35% to the front-wheel drive.

To improve driving stability and to prevent the engine overspeeding when the system engages, the inter-axle locked condition (shift stage 2) is engaged briefly by the multi-disk clutch of the front axle drive train (AV) (15) closing, shortly before the multi-disk clutch of the center differential lock (ZS) (13) opens.

Copyright DaimlerChrysler AG 30.07.2008 CD-Ausgabe G/08/04 . This WIS print-out will not be recorde d by Modification services.

Shift stage 2 - four-wheel drive locked inter-axle

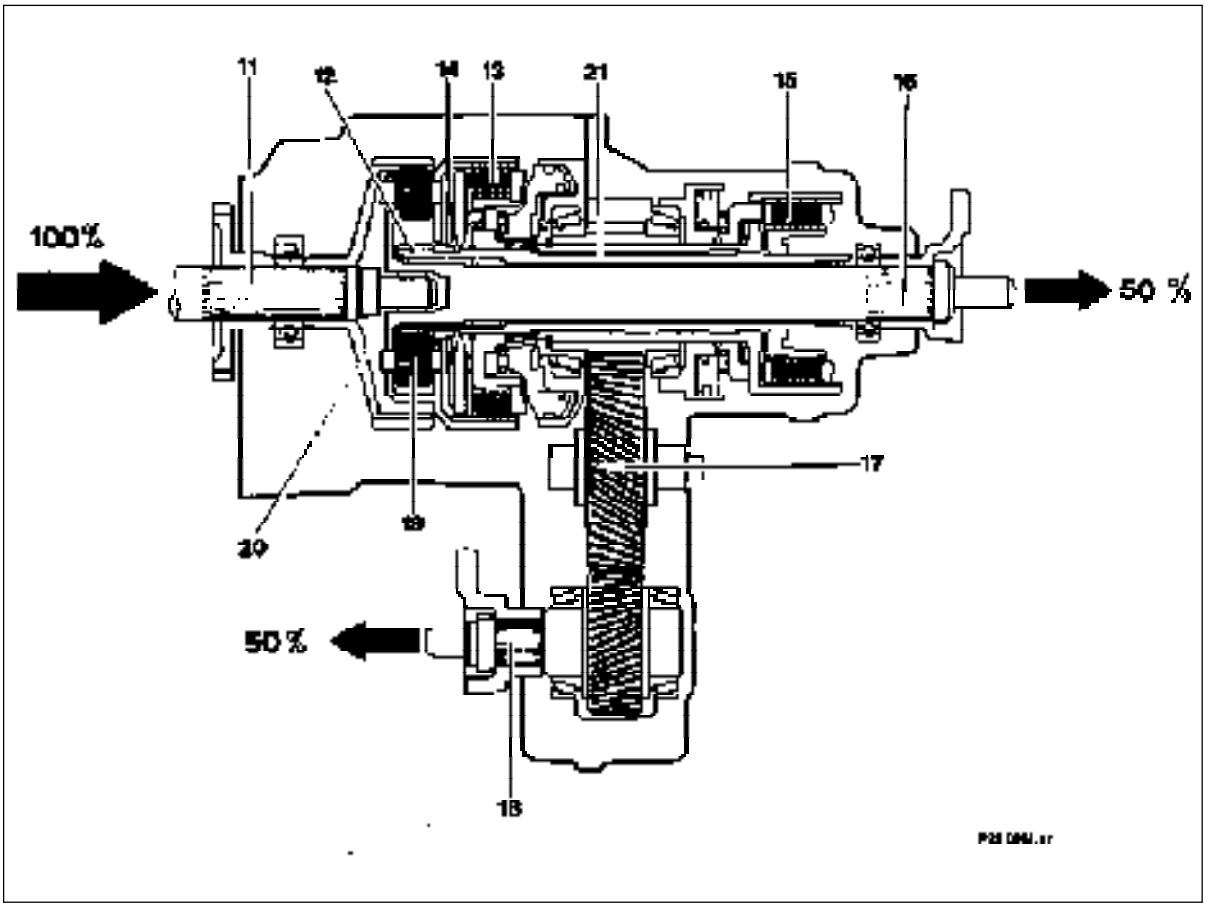

11	Transmission output shaft
12	Center differential
13	Multi-disk clutch - center differential lock (ZS)
14	Diaphragm spring
15	Multi-disk clutch - front axle drive train (AV)
16	Output shaft, rear axle drive train
17	Auxiliary drive
18	Auxiliary drive shaft, front axle drive train
19	Planet gears - center differential
20	Internal-geared wheel, center differential
21	Intermediate shaft

The multi-disk clutches of the center differential lock (ZS) (13) and the front axle drive train (AV) (15) are closed.

The center differential (12) is locked.

The drive moment of the transmission output shaft (11) is transmitted to the output shaft of the rear axle drive train (16) via the planet carrier and to the auxiliary output shaft of the front axle drive train (18) via the sun gear.

The torque distribution corresponds to the instantaneous traction conditions at the front and rear wheels. Thus a maximum of 50% of the drive output can be transmitted to the front-wheel drive.

Copyright DaimlerChrysler AG 30.07.2008 CD-Ausgabe G/08/04 . This WIS print-out will not be recorde d by Modification services.

Shift stage 3 - four-wheel drive locked inter-axle and inter-wheel

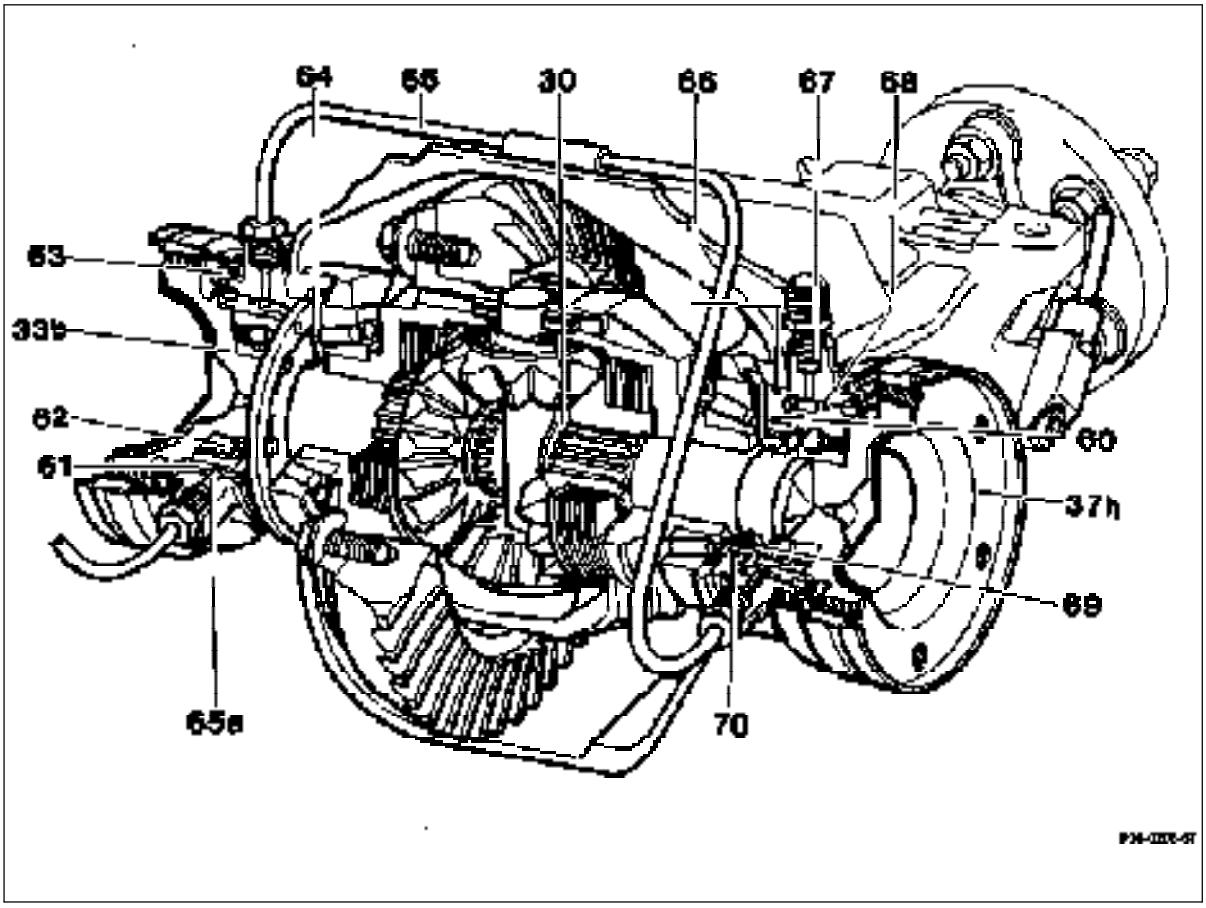

30	Circlip
33b	Connecting flange
37h	Closing plate for H shaft
60	Ring cylinder
61	Annular piston
62	Grooved ball bearing
63	Cup seal
64	Oil baffle
65	Hydraulic line
65a	Clamping sleeve
66	O-ring (80x2)
67	Breather
68	O-ring (72x3)
69	Radial sealing ring
70	O-ring (63x2,5)
71	Rear axle casing
72	Multi-disk stack

The multi-disk clutches of the center differential lock (ZS) and the front axle drive train (AV) are closed. The automatic locking differential of the rear axle is engaged.

In addition to shift stage 2, oil pressure is applied to the two annular pistons (61) of the automatic locking differential of the rear axle. With the connecting flanges (33b) they draw the differential side gears outwards. The contact force on the multi-disk stack (72) is thus increased. These connect the differential side gears to the differential and thus prevent a speed difference between the left and right rear wheel.

Testing mechanical components

Refer to Diagnosis Manual Chassis Volume 2 - 8.1, 4MATIC

Copyright DaimlerChrysler AG 30.07.2008 CD-Ausgabe G/08/04 . This WIS print-out will not be recorde d by Modification services.

28-200 Removal and installation of transfer case

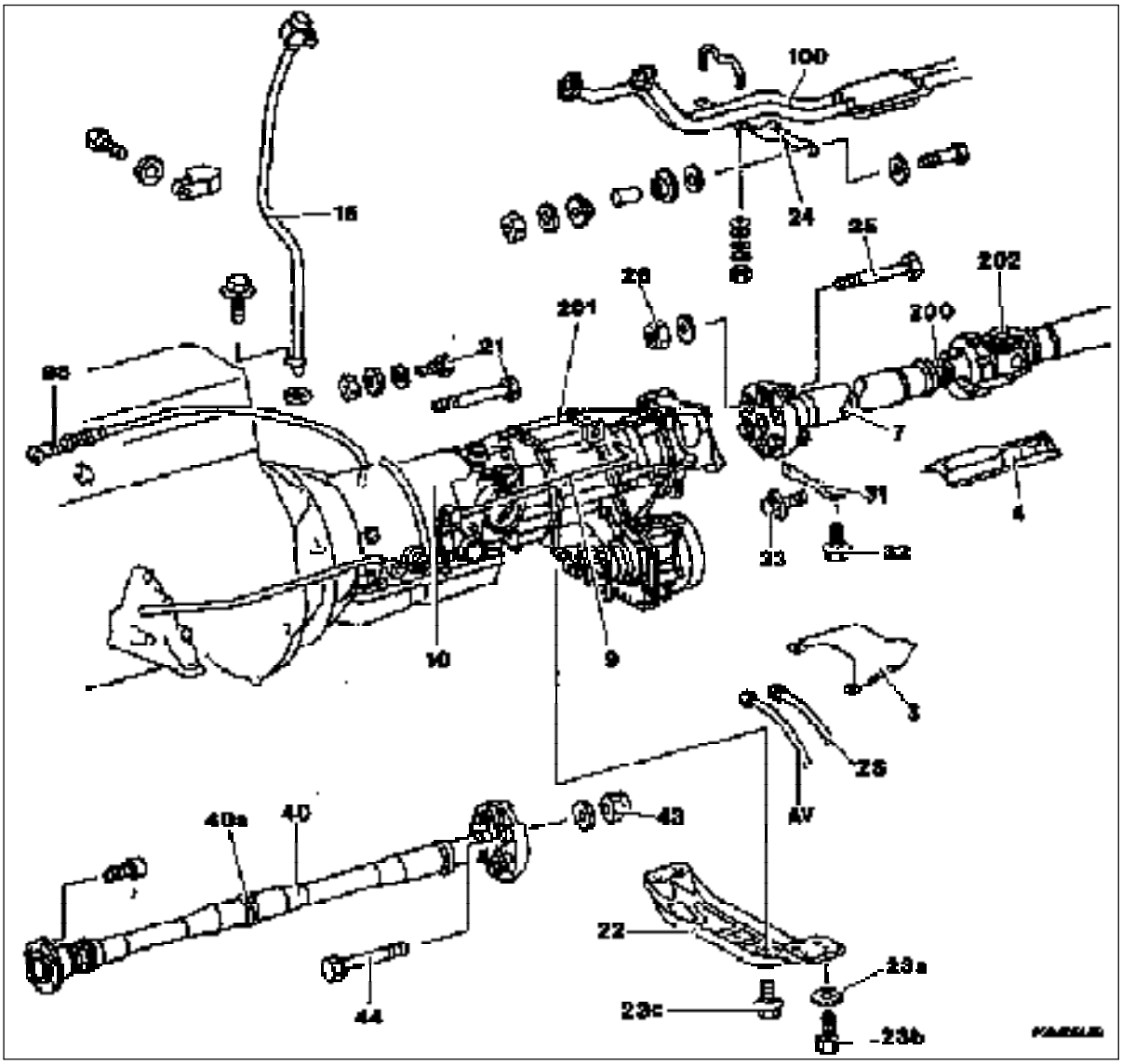

Battery ground cable	Disconnect, connect
Insulating mat in component compartment panel	Cover with a suitable sheet metal part.
Bowden cable (98)	Remove, install.
Service valve	Relocate in "Test" position (up to transfer case no. 26 616)
Coding plug	Relocate in "Test" position (as of transfer case no. 26 617)
Pressure relief screw (16)	Loosen at the valve control unit, thus reducing the storage pressure of the complete system (as of transfer case no. 26 617).
Oil dipstick guide tube (15)	Remove, install.

Copyright DaimlerChrysler AG 30.07.2008 CD-Ausgabe G/08/04 . This WIS print-out will not be recorde d by Modification services.

Exhaust system (100)	Remove, install (49-100). Remove, install exhaust side support (24).	
Shields (3) and (4)	Remove, install.	
Transverse bridge (31)	Remove, install. Hexagon bolts (32 and 33), 25 Nm.	
Oil from transfer case (201)	Drain, fill. Capacity 0.7 liter.	
Propeller shaft (7)	Unscrew, screw on. Hexagon bolts (25) 60 Nm, loosen sleeves in joint flange. Replace self-locking hexagon nuts (26).	
Propeller shaft intermediate bearing (202)	Slacken, tighten, 25 Nm.	
Prevailing torque type self-locking nut (200)	Slacken, tighten, 35 to 40 Nm.	
	Torque wrench	001 589 66 21 00,
	Open-ended wrench	126 589 00 01 00.
Propeller shaft (7)	Push together, draw apart.	
Pressure oil line of multi-disk clutch for front axle drive train (AV) and center differential (ZS)	Remove, install; seal openings with blind plugs, check lines for leaks.	
	Sealing plug kit	129 589 00 91 00.
Transmission (10)	Support with vehicle hoist or pit lift.	
Rear engine mount (22)	Unscrew, screw on, hexagon bolt (23b) and washers (23a) 40 Nm, hexagon bolts (23c) 20 Nm.	
Front propeller shaft (40)	Unscrew, screw on. Hexagon bolts (44) 40 Nm, loosen fitting sleeves in joint flange. Replace self-locking hexagon nuts (43).	
Prevailing torque type self-locking nut (40a)	Slacken, tighten, 30 to 40 Nm.	
	Torque wrench	001 589 66 21 00,
	Open-ended wrench	201 589 00 01 00.

Front propeller shaft (40)	Pull apart, push together.	
Shift lever (9)	Unclip, clip in.	
Transfer case hexagon bolts (21)	Unscrew, screw in, note different lengths, 25 - 30 Nm.	
Transfer case (201)	Draw out, insert horizontally at the internal-geared wheel. Replace gasket.	
After installing the transfer case	Bleed complete system (28-140).	

Special tools

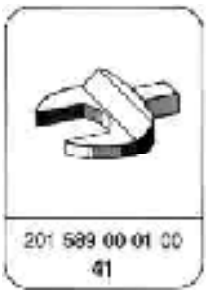

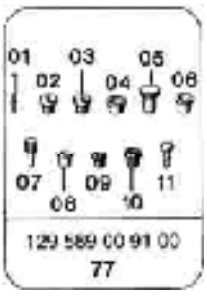

Copyright DaimlerChrysler AG 30.07.2008 CD-Ausgabe G/08/04 . This WIS print-out will not be recorde d by Modification services.

Note

As of transfer case no. 7 013, the teeth (straight) in the center differential have been modified. Previous internally-geared wheels cannot be combined with internally-geared wheels of the modified design when the transfer case is changed.

If transfer cases are ordered with the old part number, a transfer case with modified teeth and the associated internally-geared wheel will be supplied. In these cases the internally-geared wheel is to be changed at the same time.

Copyright DaimlerChrysler AG 30.07.2008 CD-Ausgabe G/08/04 . This WIS print-out will not be recorde d by Modification services.

Preceding work:
Transfer case removed (28-200)

A. Removal and installation of sun gear shaft

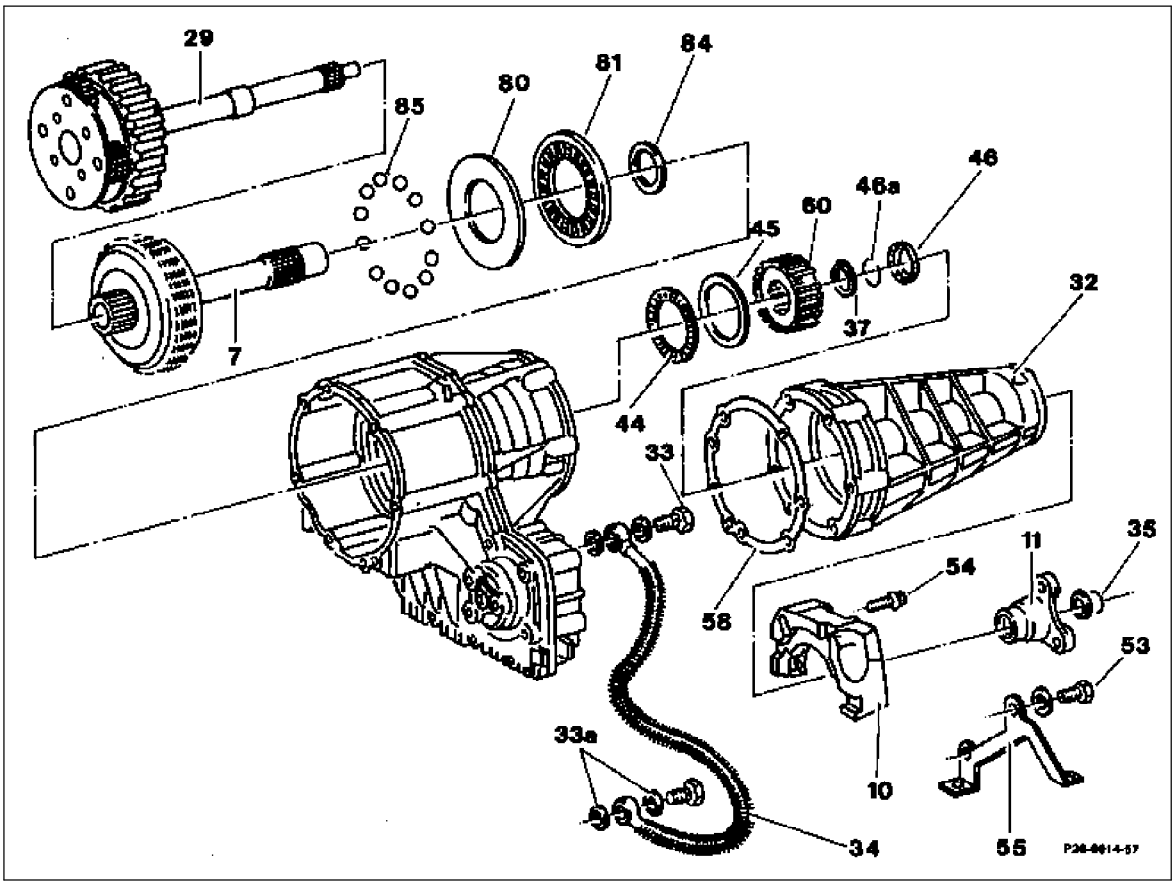

Locating plate 124 589 22 63 00	Detach, attach to assembling trestle 116 589 06 59 00 (number 1).
Internal-geared wheel 124 589 22 63 04 up to transmission no. 7012, internal-geared wheel124 589 22 63 14 as of transmission no 7013	Mount on the planet carrier (29). Note dowel pins (number 2).
Bolts (33)	Unscrew, screw on 55 Nm. Remove oil cooler pipe (34). Replace gasket (33a) (number 3)
Hydraulic connection of center differential lock (ZS) and front axle drive train (AV)	Unscrew, screw in.
Collar nut (35)	Unscrew, screw on, 160 Nm. Replace and secure (number 3). Socket wrench 126 589 02 09 00.
Joint flange (11)	Detach, push on (number 3)
Bolts (54)	Unscrew, screw in, 20 Nm. Remove, mount vibration tilger (10) (number 4).

Bolts (53)	Unscrew, screw in, 28 Nm.
	Withdraw transmission housing cover (32) and bracket (55). Clean sealing surfaces, lightly lubricate sealing lip and contact point of radial sealing ring. Replace gasket (58) (number 5).
	Note
	The transmission housing cover is fixed with two dowel pins.
Bolts (46)	Remove, install. Remove, install snap ring (46a) with pliers 000 589 52 37 00. Pull out, install planet gear shaft (29) (number 6).
	To install, mount internal-geared wheel 124 589 23 63 04 or 124 589 22 63 14 on the planet gear shaft (29).
Sun gear shaft (7)	Insert thrust pad 124 589 22 63 12. Screw on, screw off strip 124 589 22 63 06.
	Preload sun gear shaft (7), remove, install circlip (37) (number 7, 8 and 10).
Inner multi-disk carrier of front axle drive train (AV) (60), thrust washer (45) and axial bearing (44)	Remove, install (number 9).
Sun gear shaft (7)	Unscrew strip 124 589 22 63 06.
	Remove sun gear shaft (7), install, whilst noting the balls (85) (12 off) (number 10).
Axial bearing (81), thrust washers (80 and 84) and balls (85) (12 off)	Remove, install (number 10).

Special tools

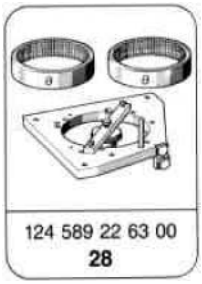

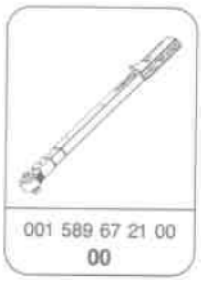

Removal and installation

1 Mount locating plate (02) 124 589 22 63 00 on assembly trestle (01) 116 589 06 59 00 and fasten transfer case to locator (02).

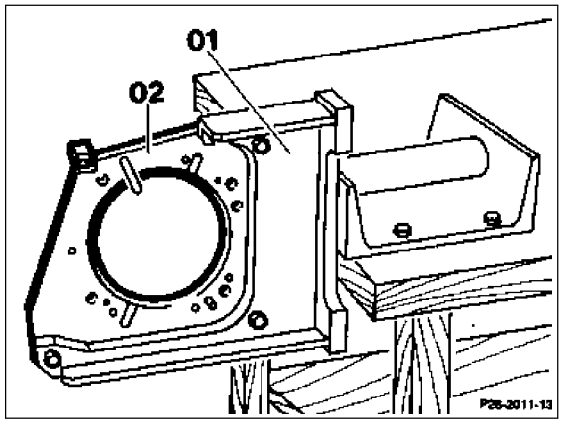

2 Mount internal-geared wheel (03) on planet gear carrier (29). The dowel pins (arrows) must engage in the locator plate.

Note
Use internal-geared wheel 124 589 22 63 04, up to transmission no. 7012 and internal-geared wheel 124 589 22 63 14 as of transmission no. 7013.

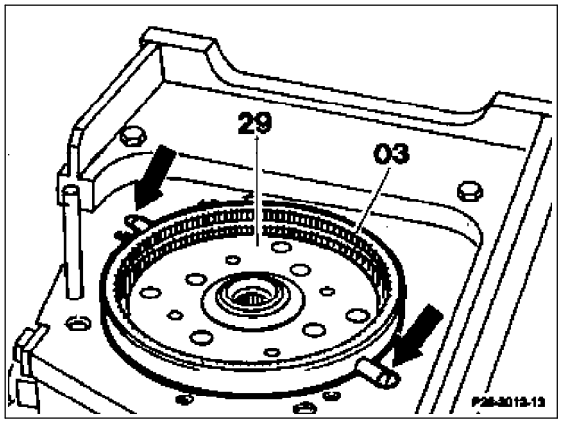

3 Unscrew banjo bolts (33). Remove oil cooler pipe (34). Unlock collar nut (35) and unscrew using socket wrench bit 126 589 02 09 00. Withdraw joint flange (11).

Installation note
Replace oil cooler pipe gaskets (33).
Tightening torque
Banjo bolts (33) 55 Nm,
Collar nut (35) 160 Nm.

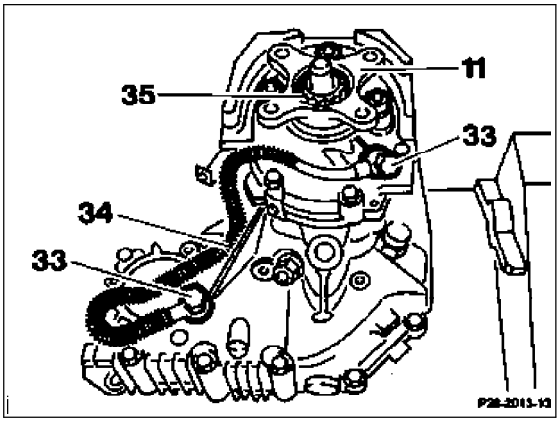

4 Unscrew bolt (54). Remove vibration tilger (10).

Installation note
Tightening torque 20 Nm.

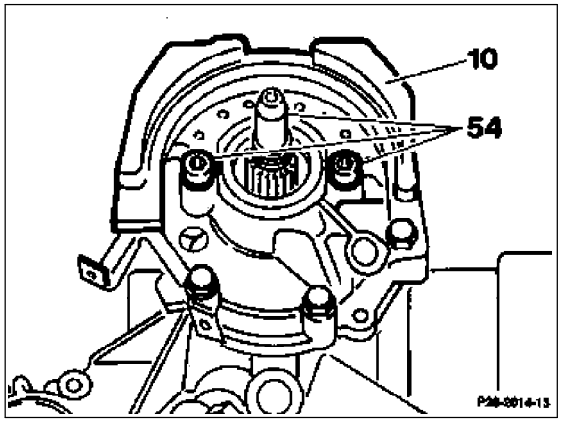

5 Unscrew bolts (53), remove bracket (55). Withdraw transmission housing cover (32).

Note
The transmission housing cover is located with two dowel pins.

Installation note
Clean sealing surface of transmission housing and transmission housing cover (32). Replace gasket. Lightly lubricate sealing lip of radial sealing ring and contact point on the planet gear shaft.
Tightening torque 28 Nm.

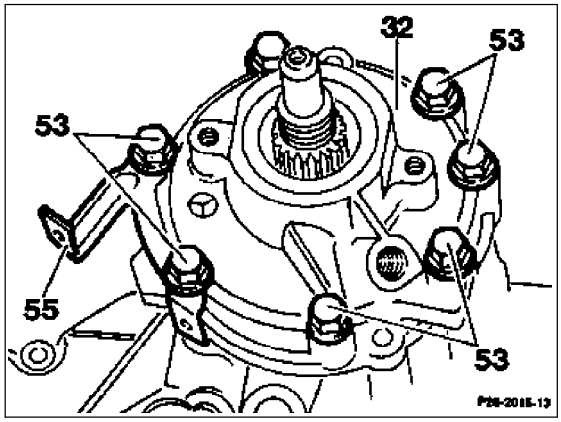

6 Swivel transmission to the horizontal. Remove retaining ring (46). Remove snap ring (46a) using pliers 000 589 52 37 00. Withdraw planet gear shaft (29).

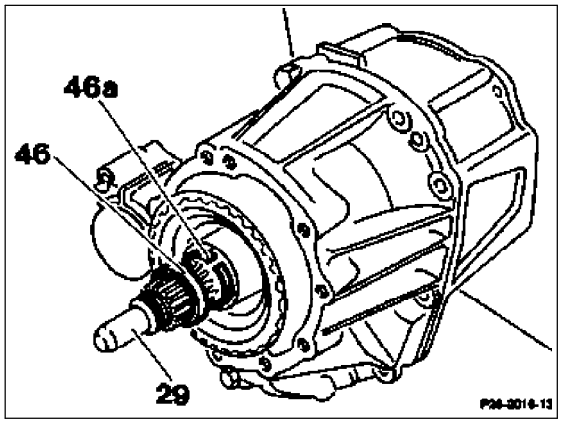

Installation note
Mount internal-geared wheel (03) 124 589 22 63 04 or 126 589 22 63 14 on the planet gear shaft (29) and install together in the transmission housing.

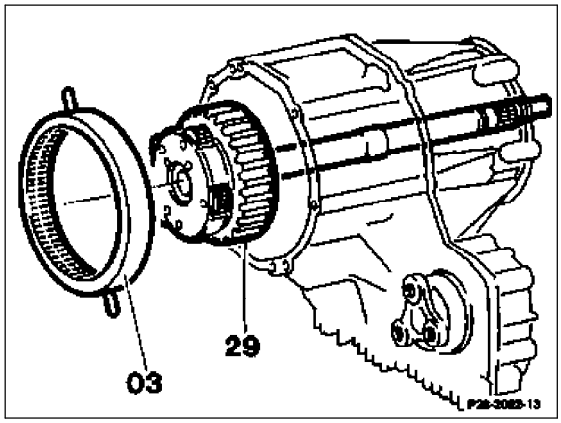

7 Swivel transmission through 90°. Insert thrust pad (028) 124 589 22 63 12 into the sun gear shaft (7). Screw on strip (09) 124 589 22 63 06. Pre-load sun gear shaft (center differential lock (ZS) clutch) with bolt (arrow) until circlip (37) is released.

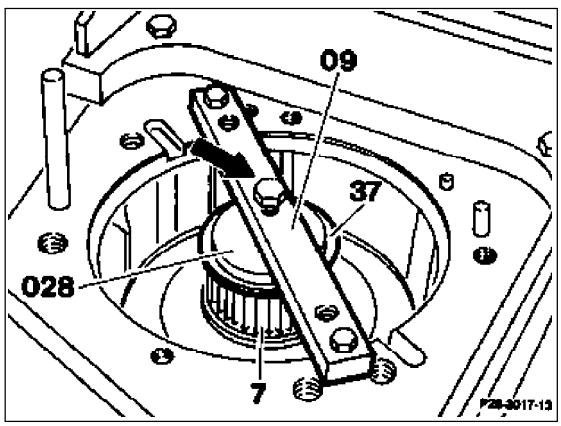

8 Position transmission upright (multi-disk clutch of front axle drive train (AV) upwards). Remove circlip (37) with circlip pliers.

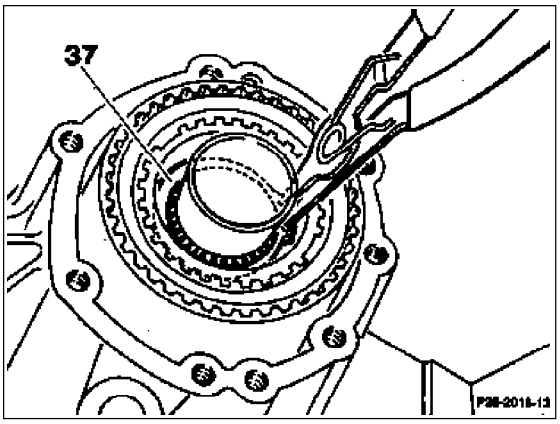

9 Remove inner multi-disk carrier of front axle drive train (AV) (60), thrust washer (45) and axial bearing (44).

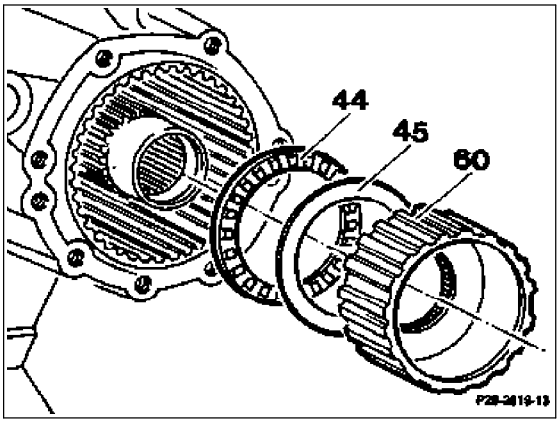

10 Unscrew strip bracket (09) 124 589 22 63 06, secure sun gear shaft (7) and thrust pad (028) 124 589 22 63 12, remove downwards.

Note
Ensure that the 12 balls do not fall out.

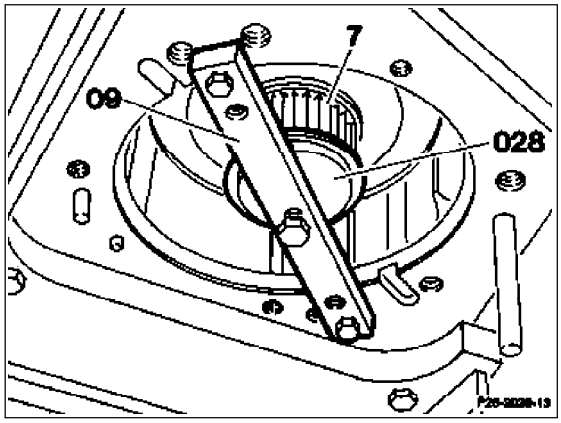

Installation note
Position transmission upright (multi-disk clutch of front axle drive train (AV) upwards). Push in sun gear shaft (7) complete with 12 balls, thrust washers and axial bearing from below. Swivel transmission through 180°.

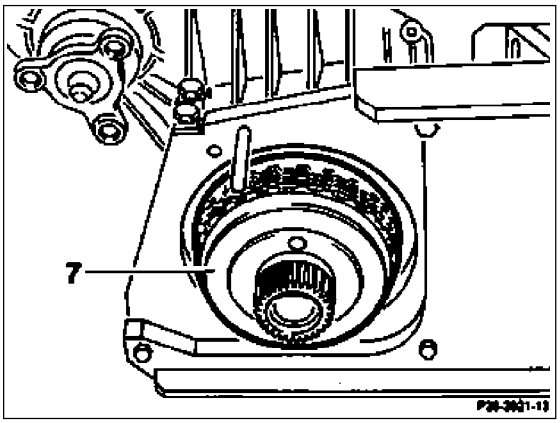

B. Removal and installation of center differential lock (ZS) piston

Preceding work:
Sun gear shaft removed (28-300, section A).

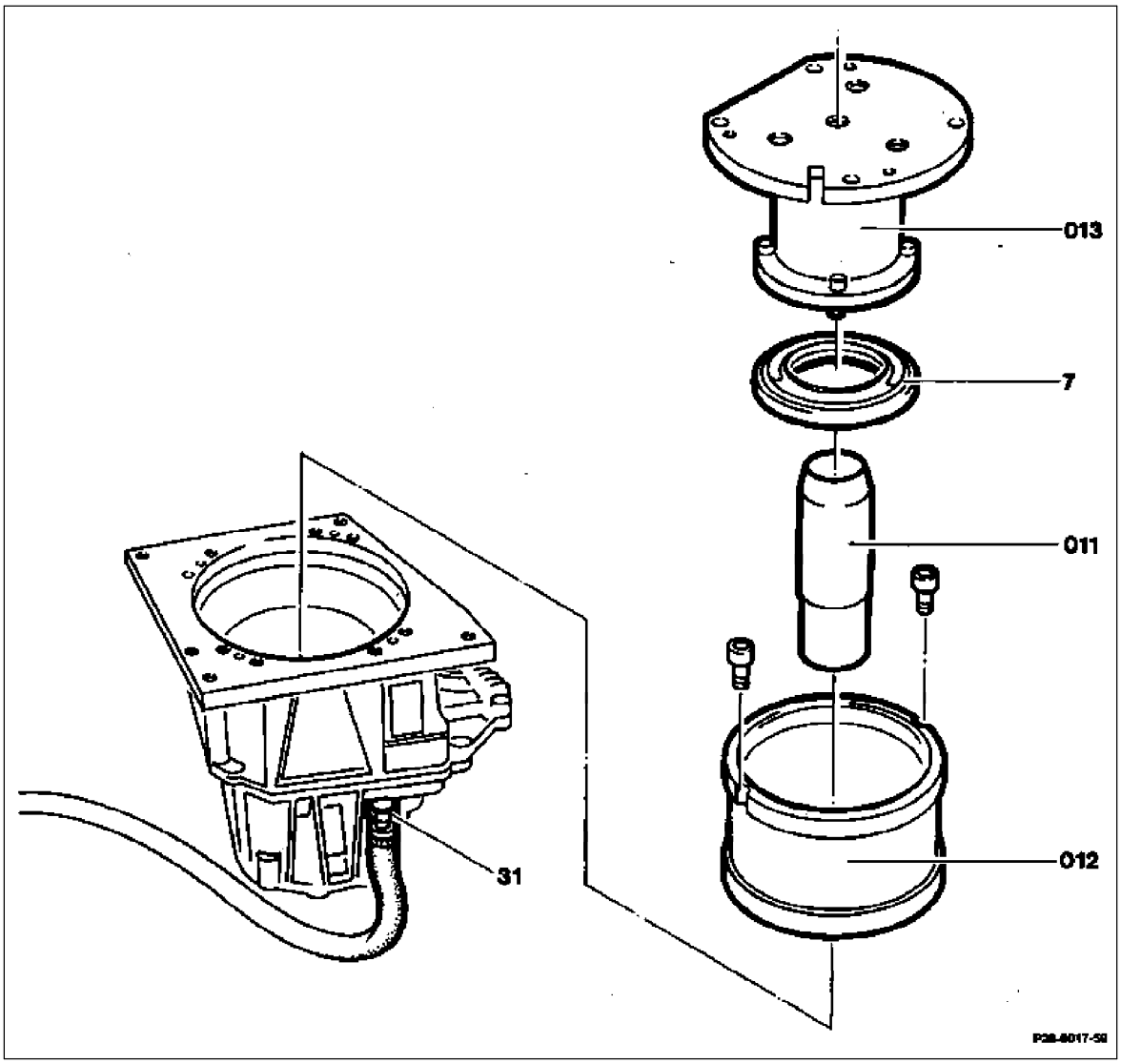

Inner bushing (011) 124 589 05 14 00	Insert.
Outer bushing (012) 124 589 03 14 00	Insert and screw on, unscrew.
Assembly fixture (013) 124 589 04 14 00	Install and screw on, screw off at center differential lock (ZS) piston (7).
Hydraulic connection of center differential lock (ZS) (31)	Apply compressed air, press out center differential piston (ZS) (7).

Center differential lock piston (ZS) (7)	Coat sealing lip with hydraulic oil.
Center differential lock piston (ZS) (7) with assembly fixture 124 589 04 14 00	Insert into outer bushing (012), press in. Note pilot pin. Note gap dimension "B" 30.5 F 1 mm.
Center differential lock piston (ZS) (7)	Check for leaks (28-303).

Special tools

124 589 05 14 00
28

124 589 03 14 00
28

124 589 04 14 00
28

Gap dimension "B"

Check gap dimension "B" (B = 30.5 F 1 mm), by measuring on the assembly fixture (013) 124 589 04 14 00 to locating plate using depth caliper gauge. If the gap dimension "B" is incorrect, withdraw center differential lock (ZS) piston again and check the position of the springs (28-300, section C).

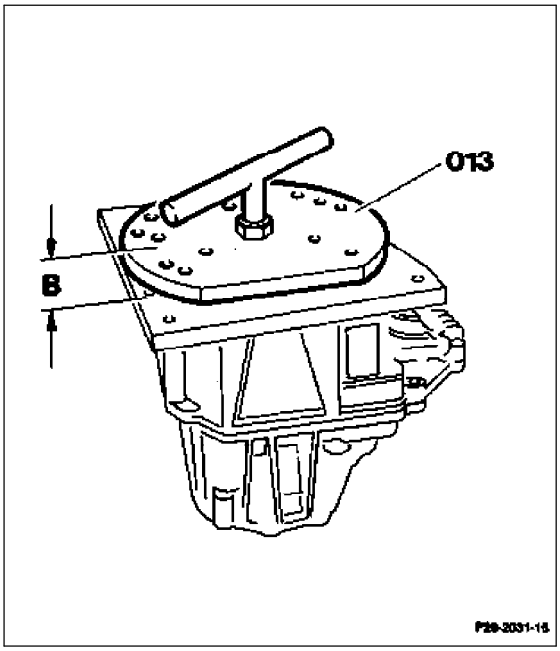

C. Removal and installation of outer multi-disk carrier of front axle drive train (AV)

Preceding work:
Sun gear shaft removed (28-300, section A).
Center differential lock (ZS) piston removed (28-300, section B).

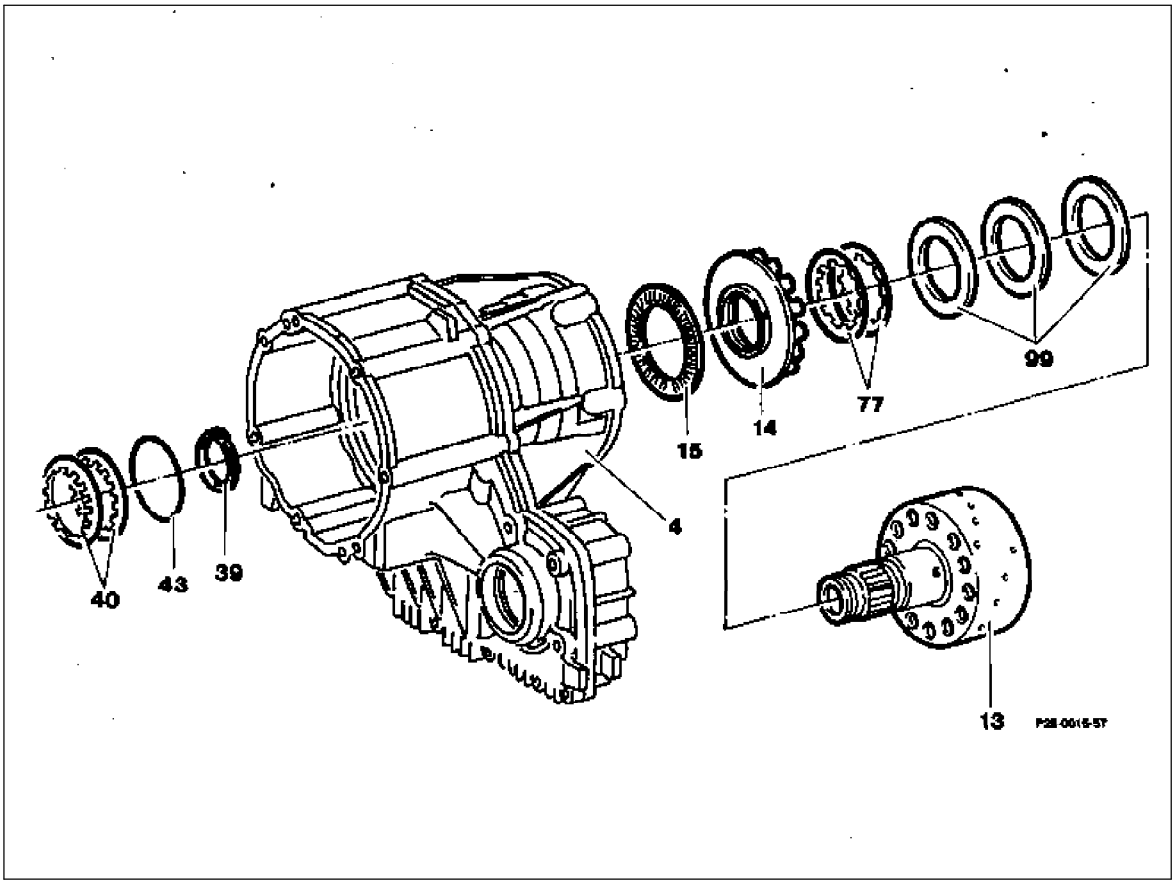

Springs (40) and spacer ring (43)	Remove. When installing, check correct installed position (number 1).
Circlip (39)	Remove, install (number 2). When installing, assemble with minimum play (circlips are available in thicknesses of 3.0; 3.05; 3.1; 3.15).
Outer multi-disk carrier of front axle drive train (AV) (13)	Withdraw from transfer case housing (4), push in from below (number 3).
Axial bearing (15), thrust pad (14), springs (77) and shims (99)	Remove, install. **Installation note** Ensure correct installed position of springs (77).

Removal, installation

1 Remove two springs (40) and spacer ring (43).

Installation note
Install spacer ring (43) with the straight side upwards.
Install the springs (40) so that the spring tongues are at the same height.

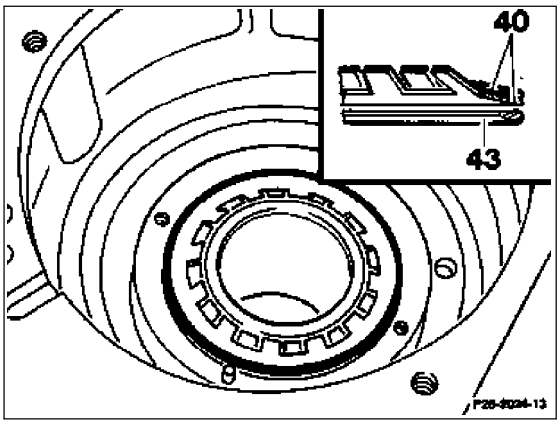

2 Preload outer multi-disk carrier of front axle drive train with the strip 124 589 22 63 12 screwed onto the transfer case housing.

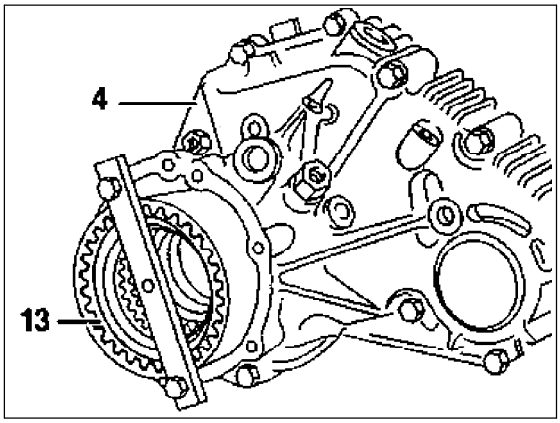

3 Remove circlip (39), preloading the outer multi-disk carrier using the strip 124 589 22 63 12 screwed onto the transfer case housing.

Installation note
Mount circlip and check axial play of outer multi-disk carrier. The axial play can be reduced to the minimum play by means of circlips of different thicknesses. However, attention has to be paid to the correct seating of the circlip in the groove.

Circlips are available in the following thicknesses: 3.0; 3.05; 3.1 and 3.15 mm.

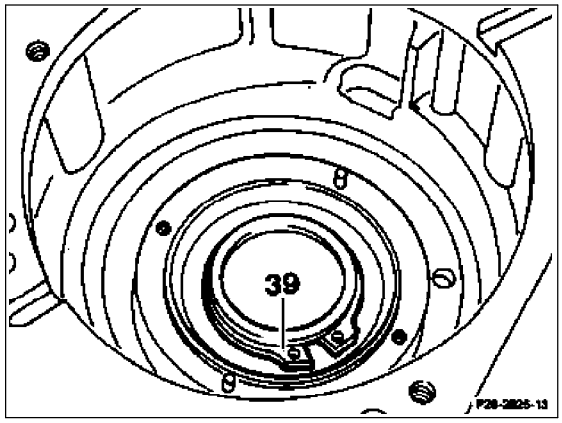

4 Withdraw outer multi-disk carrier of front axle drive train (13) from the transfer case housing (4).

Installation note
Push in outer multi-disk carrier of front axle drive train (AV) from below.

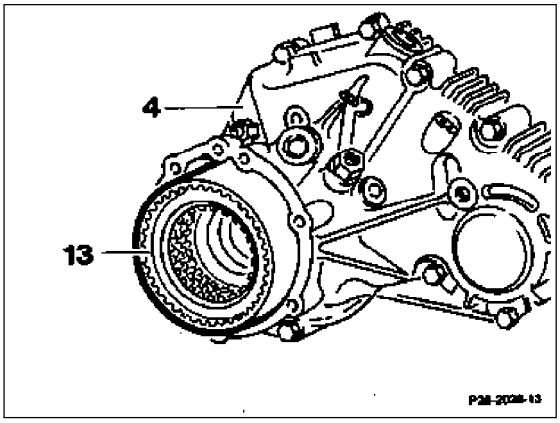

5 Remove axial bearing (15), thrust pad (14), springs (77), and shims (99) from the outer multi-disk carrier of front axle drive train (AV) (13).

Installation note

Assemble springs (77) so that the spring tongues are at the same height.

6 Install in reverse sequence.

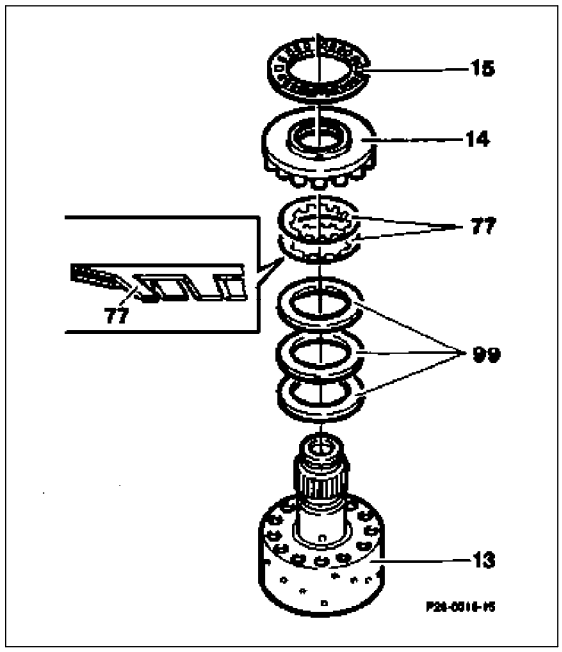

D. Removal and installation of front axle drive train (AV) piston

Preceding work:
Sun gear shaft removed (28-300, section A).
Center differential lock (ZS) piston removed (28-300, section B).
Outer multi-disk carrier of front axle drive train (AV) removed (28-300, section C).

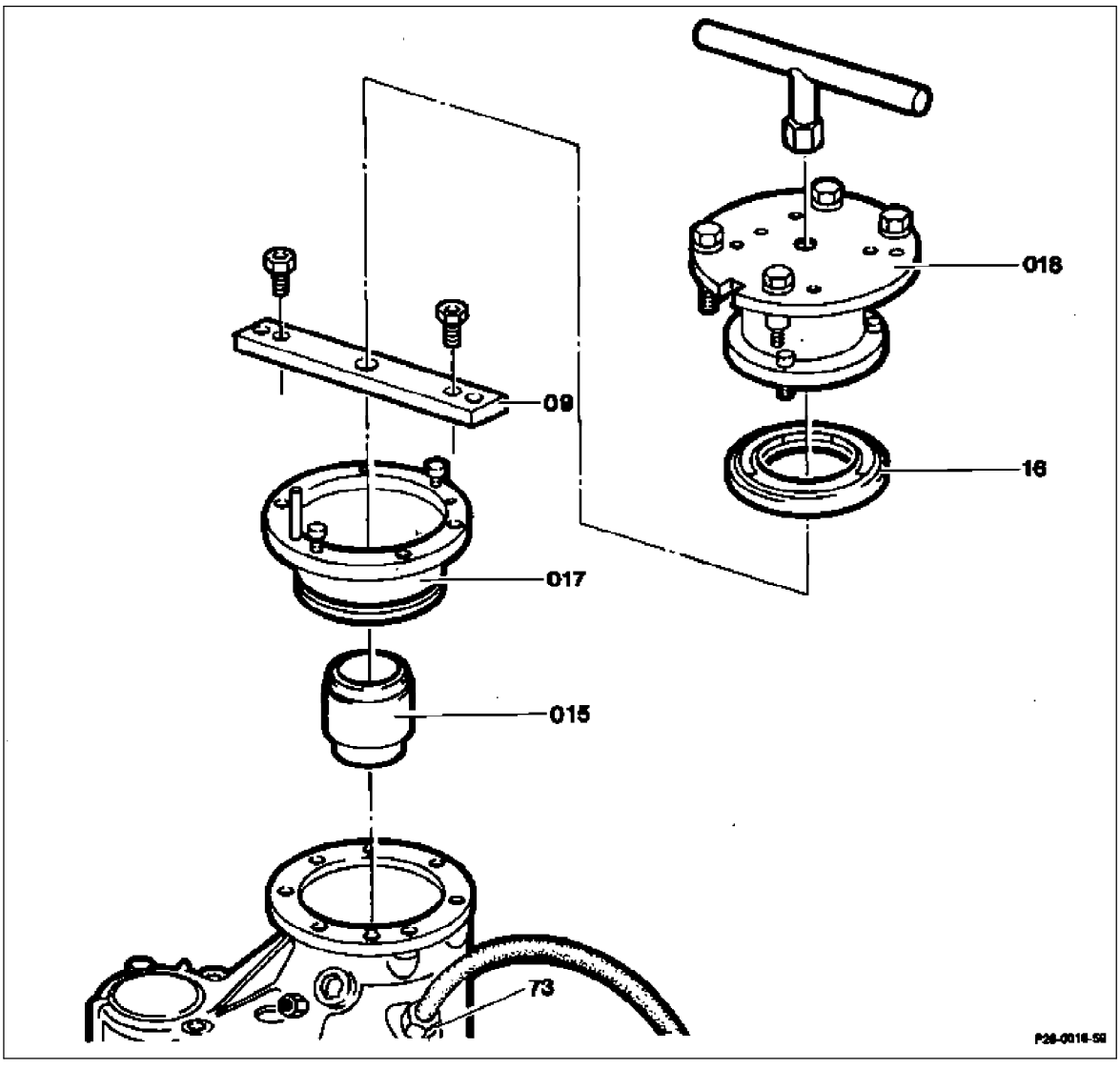

Outer bushing (017) 124 589 01 14 00	Install and screw on, unscrew.
Inner bushing (015) 124 589 00 14 00	Install.
Strip (09) 124 589 22 63 00	Screw on, unscrew.
Hydraulic connection of front axle drive train (AV) (73)	Apply compressed air, press out front axle drive train (AV) piston (16).
Assembly fixture (018) 124 589 02 14 01	Screw on, unscrew at front axle drive train (AV) piston (16) and coat sealing lip of front axle drive train (AV) piston (16) with hydraulic oil.
Front axle drive train (AV) piston (16) (018) 124 589 02 14 01	Insert, press into outer bushing (017) with assembly fixture
Front axle drive train (AV) piston (16)	Check for leaks (28-303).

Special tool

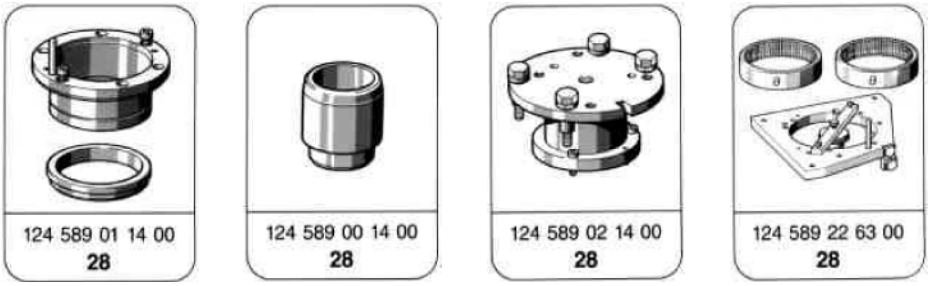

Gap dimension "A"

Note gap dimension "A" (A approx, 1 mm).
If the gap dimension is greater than 1.5 mm, the piston is not seating correctly in the piston guide.

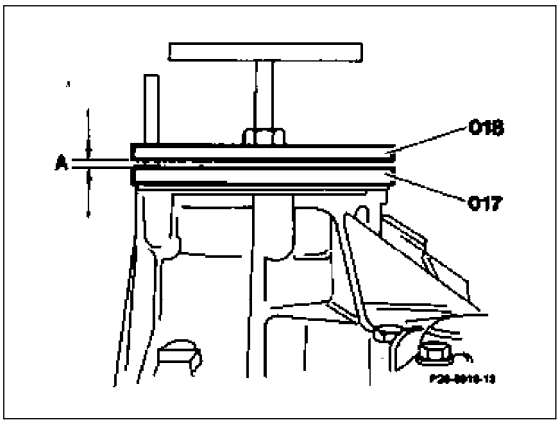

017 Outer bushing
018 Assembly fixture

E. Detaching and assembling transfer case

Preceding work:
Sun gear shaft removed (28-300, section A).
Center differential lock (ZS) piston removed (28-300, section B).
Outer multi-disk carrier of front axle drive train (AV) removed (28-300, section C).

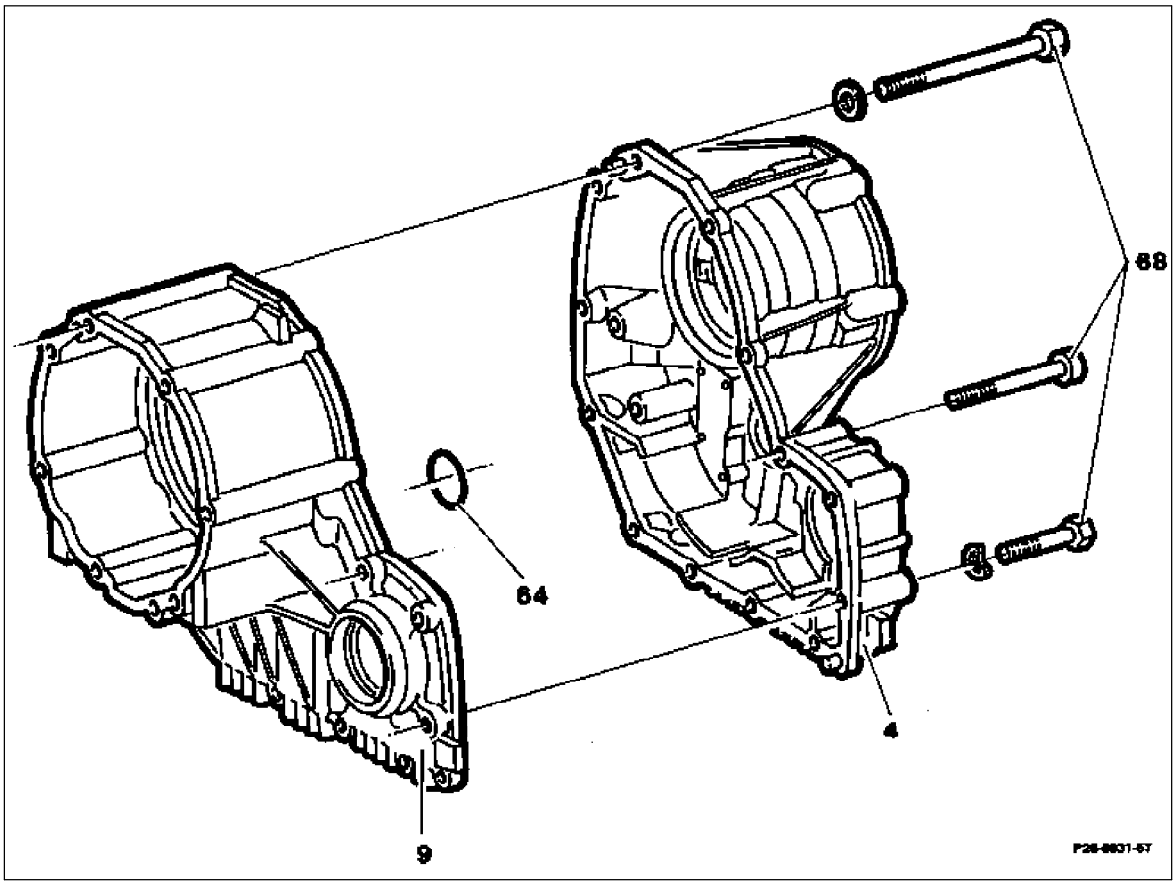

Hydraulic connection of center differential lock (ZS)	Unscrew, screw in, 40 Nm.
Bolts (68)	Unscrew, screw in, 28 Nm.
Transfer case housing (4)	Detach, mount at intermediate housing (9). Note dowel pins.
Sealing surfaces	Clean. Coat liquid seal gasket in accordance with DBL 793 820.
O-ring (64)	Replace.
Tapered roller bearing	Lubricate lightly.

F. Dismantling and assembling output shaft

Preceding work:
Transfer case detached (28-300, section E).

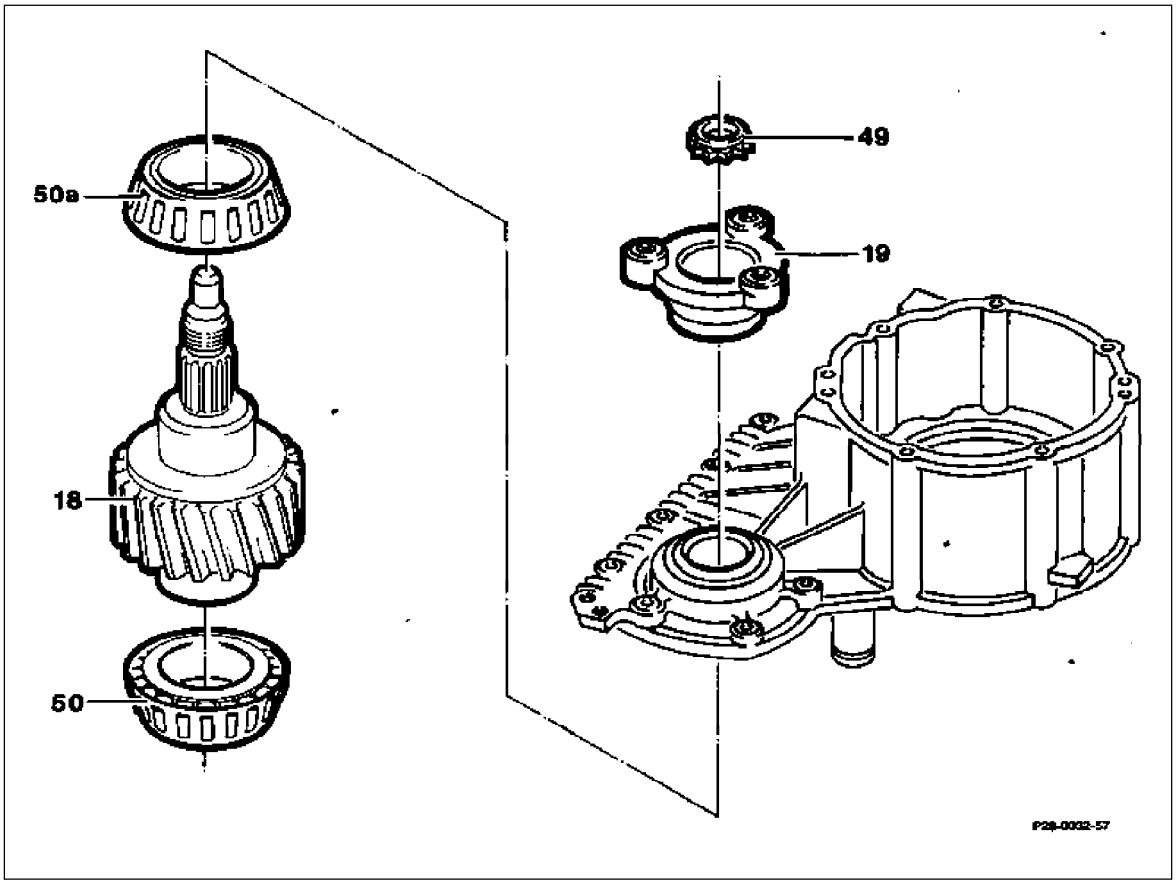

Collar nut (49)	Unscrew, screw on, 160 Nm. Replace and lock.	
	Stud driver	129 589 01 07 00,
	Socket wrench	201 589 00 09 00.
Joint flange (19)	Unscrew, screw on, 160 Nm. Replace and lock.	
Output shaft (18)	Clamp, use aluminum jaws.	
Tapered roller bearing (50a)	Detach, press on.	
	Collet chuck	124 589 00 34 00,
	Puller	001 589 36 33 00,
	Mandrel	123 589 04 15 00.
Tapered roller bearing (50)	Pull off, press on.	
	Collet chuck	124 589 00 34 00,
	Puller	001 589 36 33 00,
	Thrust pad	124 589 02 34 00,
	Mandrel	123 589 04 15 00.
Bearing plate	Measure, adjust (28-300, section L).	

Special tools

124 589 00 34 00
28

001 589 36 33 00
26 33 35

124 589 02 34 00
28

201 589 00 09 00
28 35

129 589 01 07 00
26 28 35 83

124 589 06 15 00
26 28

G. Dismantling and assembling drive gear

Preceding work:
Transfer case detached (28-300, section E).

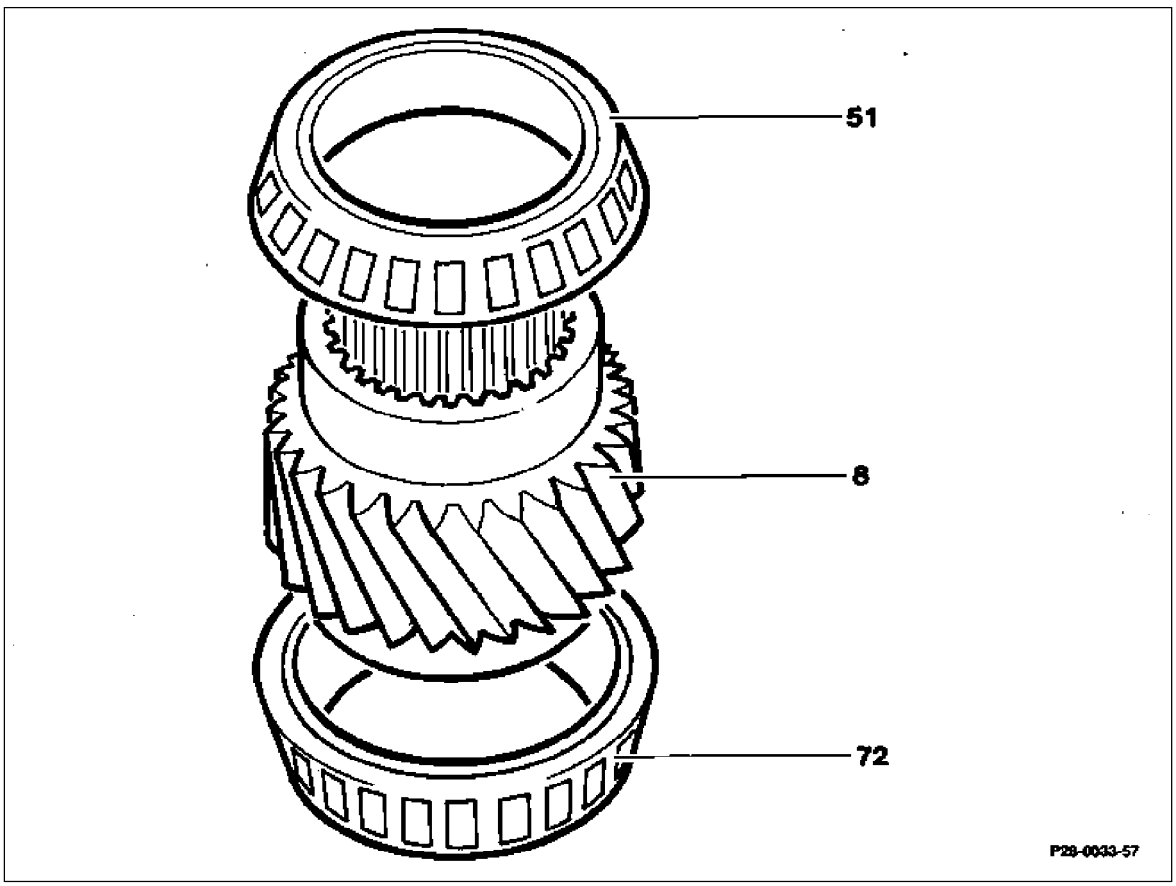

Drive gear (8)	Clamp, using aluminum jaws.
Tapered roller bearing (51, 72)	Pull off and press on using suitable tube.
Collet chuck	124 589 01 34 00,
Puller	001 589 36 33 00,
Mandrel	126 589 00 15 00.

Note

Tapered roller bearings (51, 72) must abut flat with the drive gear (8).

Bearing play	Measure, adjust (28-300, section L).

Special tools

124 589 01 34 00
28

001 589 36 33 00
26 33 35

126 589 00 15 00
35

H. Removal and installation of bearing outer rings from intermediate housing

Preceding work:
Transfer case detached (28-300, section E).

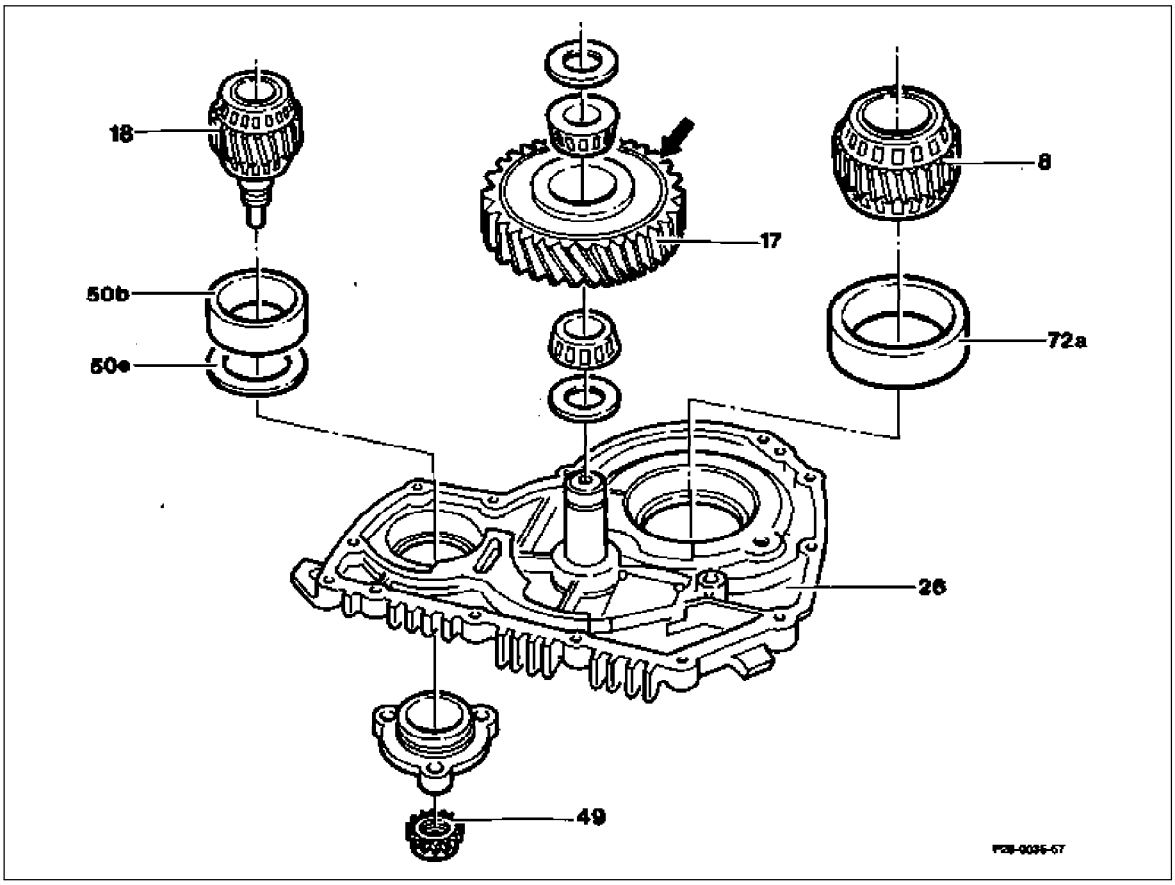

Collar nut (49)	Unscrew, screw on, 160 Nm. Replace and lock.
	Stud driver 129 589 01 07 00,
	Socket wrench 126 589 02 09 00.
Output shaft (18), drive gear (8), intermediate gear (17)	Remove, install. When installing, the identification groove (arrow) on the intermediate gear (17) must point upwards.

Bearing outer ring (50b)	Withdraw, replace. Support counter steady with two pieces of wood on the adapter housing (26). Internal extractor 000 589 30 33 00, Steady 000 589 34 33 00, Mandrel 201 589 00 15 00.
Distance spacer (50e)	Remove, install.
Bearing outer ring (72a)	Drive out of adapter housing (26) with a suitable drift punch. Press in bearing outer ring (72a) **without shim** using suitable mandrel.
Bearing play	Measure, adjust (28-300, section L).

Special tools

Note
When installing new bearing outer rings and tapered roller bearings the spacers which have been removed are to be re-installed.

J. Removal and installation of bearing outer rings from transfer case housing

Preceding work:
Transfer case removed (28-300, section E).

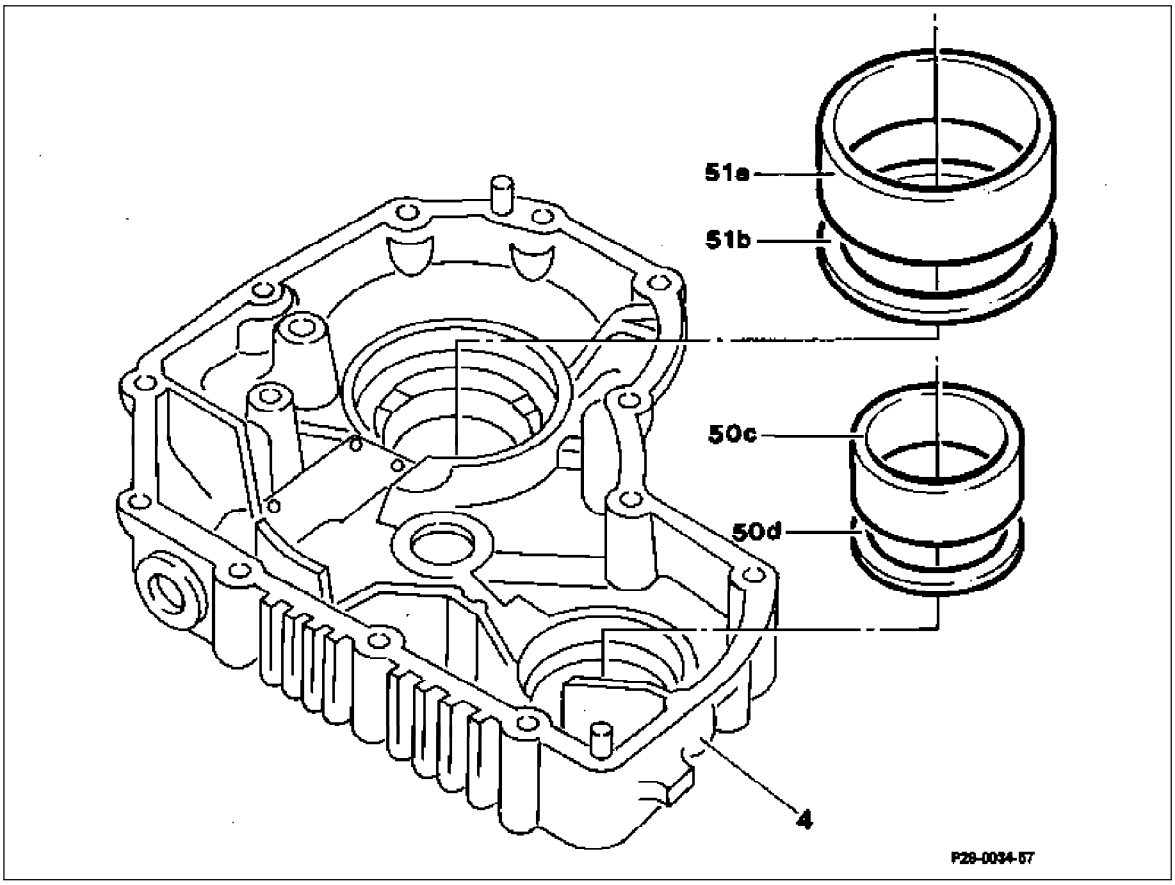

Bearing outer ring (50c)	Withdraw, replace. Press in using suitable mandrel. Support counter steady on the transfer gear housing (4) with two pieces of wood.	
	Internal extractor	000 589 30 33 00,
	Steady	000 589 34 33 00.
Bearing outer ring (51a)	Withdraw, replace. Press in using suitable mandrel. Support counter steady on the transfer gear housing (4) with two pieces of wood.	
	Internal extractor	000 589 68 33 00,
	Steady	000 589 34 33 00.
Spacer (50d, 51b)	Remove, install.	
Bearing play	Measure, adjust (28-300, section L).	

Special tools

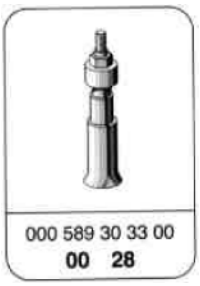

Note
When installing new bearing outer rings the spacers which have been removed are to be reinstalled.

K. Removal and installation of needle bearings in sun gear shaft

Preceding work:
Sun gear shaft removed (28-300, section A).

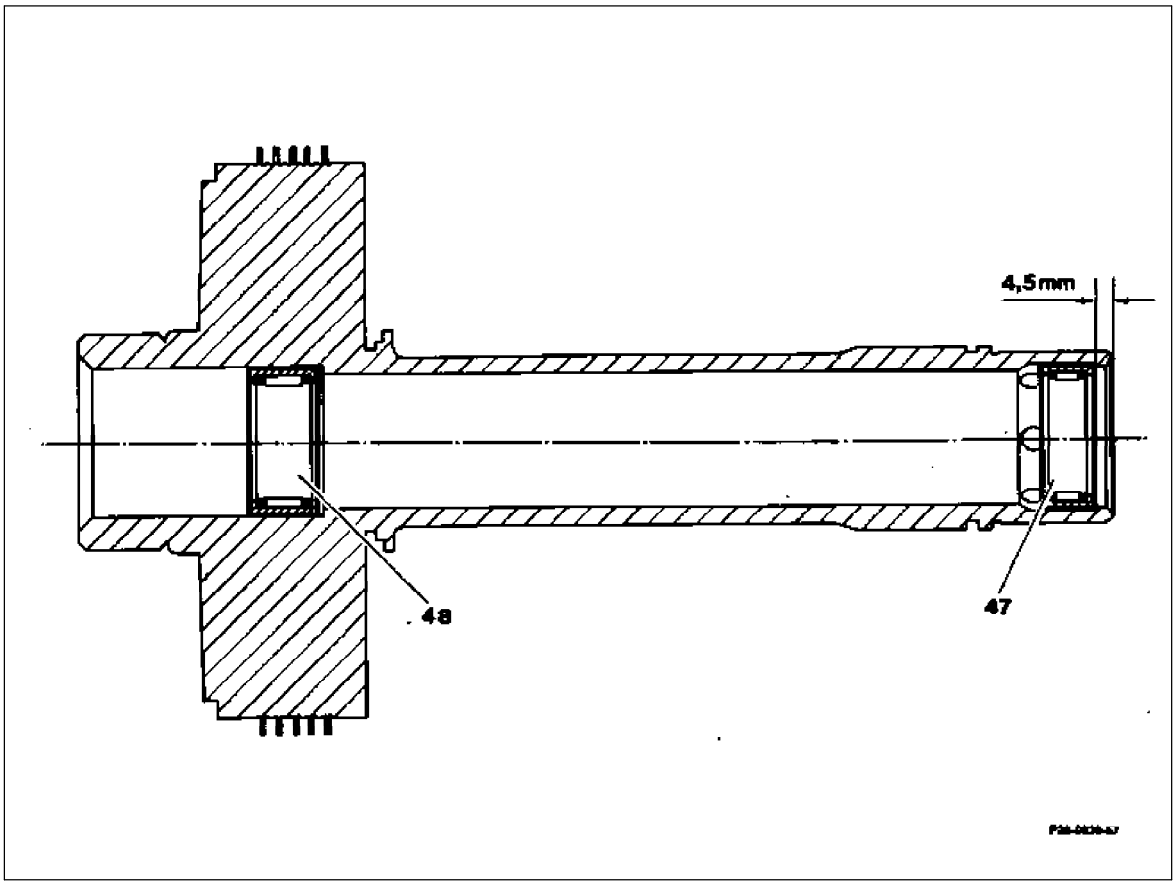

Needle roller bearing (47)	Pull out, press in.
	When pressing in, note inset of 4.5 + 0.3 mm.
Needle roller bearing (48)	Pull out, press in.
	Press in needle roller bearings up to the stop.

L. Checking and if necessary adjusting bearing play

Preceding work:
Transfer case removed (28-200).
Sun gear shaft removed (28-300, section A).
Center differential lock (ZS) piston removed (28-300, section B).
Outer multi-disk carrier of front axle drive train (AV) removed (28-300, section C).
Detaching and assembling transfer case (28-300, section E).

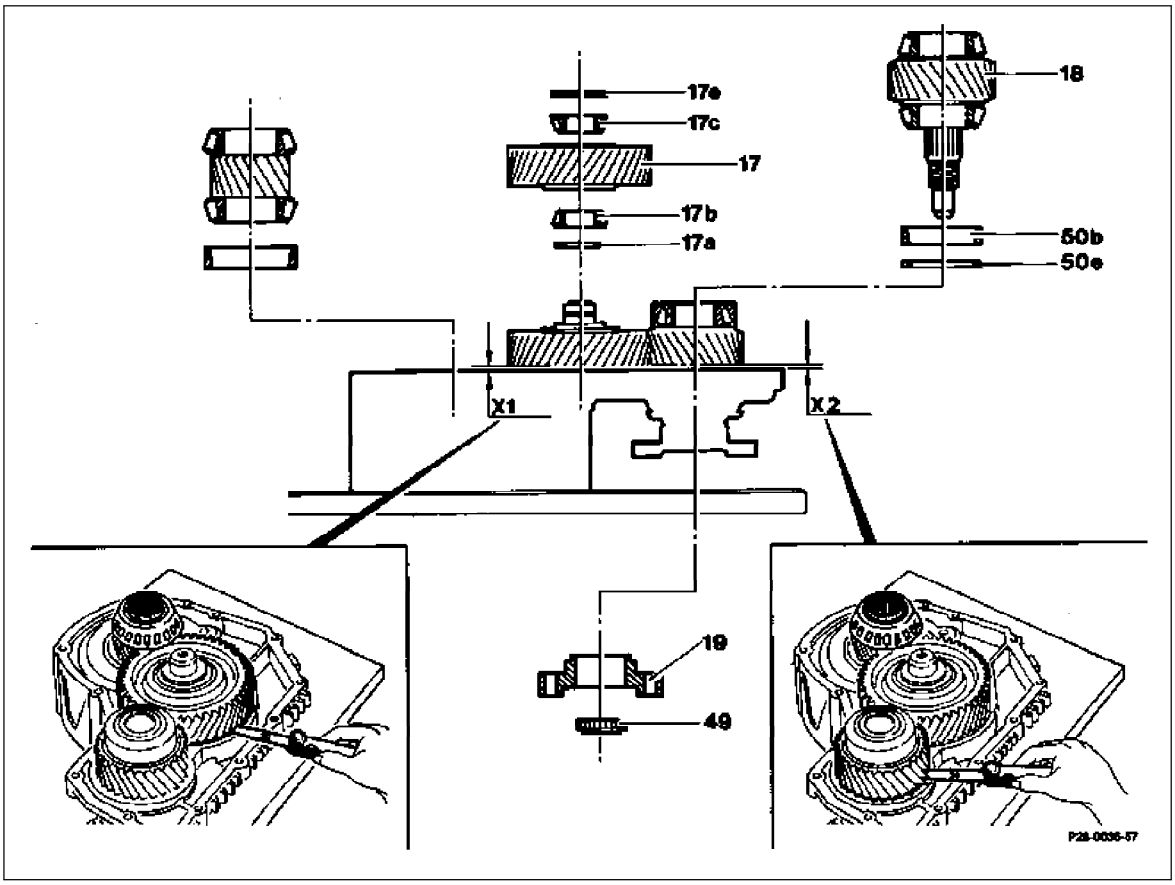

Note	**In order to ensure the satisfactory operation of the transfer case, the bearing preload is to be measured extremely carefully.**
Collar nut (49)	Unlock, replace, 160 Nm and secure. Withdraw, slide on joint flange (19). Stud driver 129 589 01 07 00, socket wrench 126 589 02 09 00.
Dimension "X2"	Measure (X2 = 0.2 mm), adjust, if necessary remove to adjust bearing outer ring (50 b). Install shims (50e) (numbers 2 to 7).
Dimension "X1"	Measure (X1 = 0.2 mm), adjust, if necessary remove to adjust intermediate gear (17) and tapered roller bearing (17 b, 17 c), install shim (17a) (number 8).

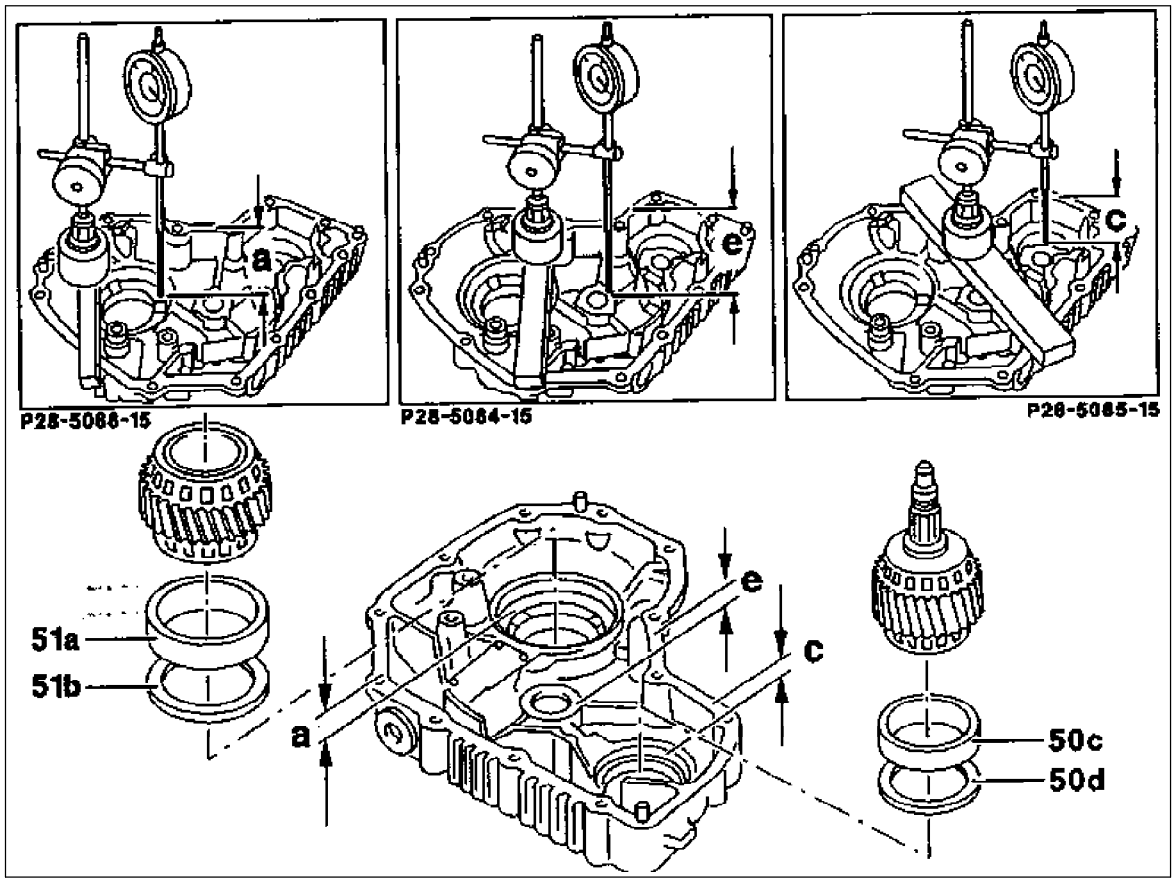

P28-5091-57

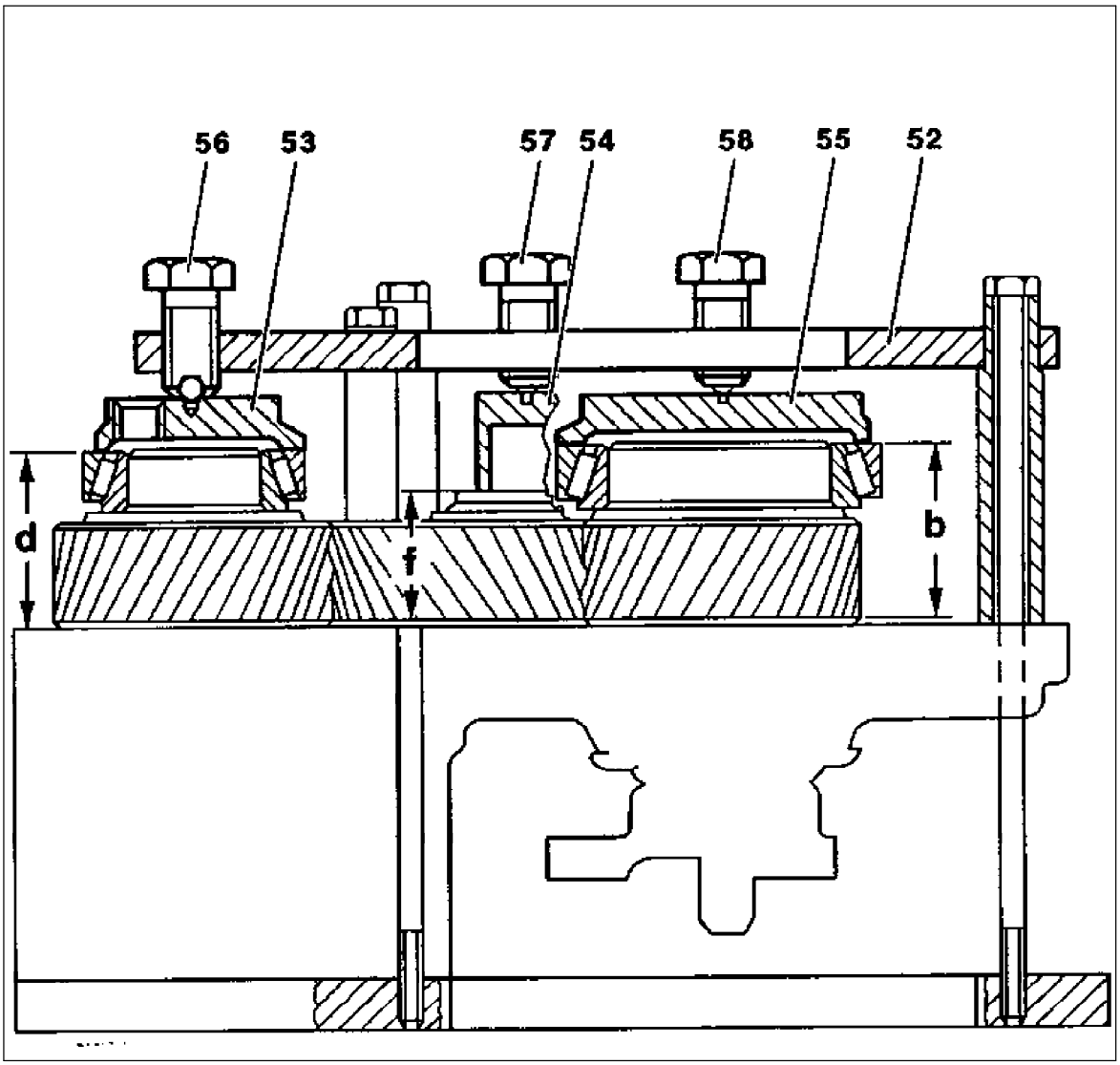

P28-5092-59

Bearing outer rings (51a, 50c)_____	Remove from transfer case housing (28-300, section J).
Bearing outer rings (51a, 50c) _____	Mount on gear drives and output shaft (number 9).

Pressure members (53, 54, 55)	Mount on the bearing outer rings (51a, 50c) (number 10).
Retaining plate (52)	Mount and fasten to transfer case housing (number 11).
Bolts (56, 57, 58)	Tighten to 1 Nm (number 12).

Dimension "**a**"	Measure (number 13), enter in shop-made table.
Dimension "**b**"	Measure (number 14), enter in shop-made table.
Dimension "**c**"	Measure (number 15), enter in shop-made table.
Dimension "**d**"	Measure (number 16), enter in shop-made table.
Dimension "**e**"	Measure (number 17), enter in shop-made table.
Dimension "**f**"	Measure (number 18), enter in shop-made table.
Spacer thickness	Calculate with aid of table and install.
Bearing outer rings (51a, 51c)	Install in transfer case housing (number 19).
3-arm flange	Install on front axle.
Output friction coefficient	Measure (number 20)

Special tools

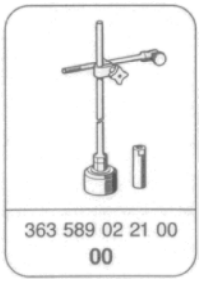
363 589 02 21 00
00

201 589 00 15 00
28 35

126 589 02 09 00
26 27 28 35

129 589 01 07 00
26 28 35 83

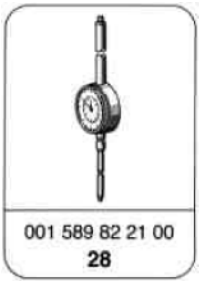
001 589 82 21 00
28

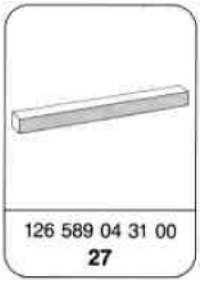
126 589 04 31 00
27

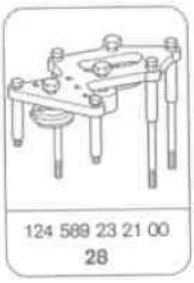
124 589 23 21 00
28

Note
In order to ensure the satisfactory operation of the transfer case, the bearing preload is to be measured extremely carefully.

Measuring

1 Unlock collar nut (49) and slacken with socket wrench 126 589 02 09 00 whilst steadying with stud driver
129 589 01 07 00 and turn down. Withdraw joint flange (19).

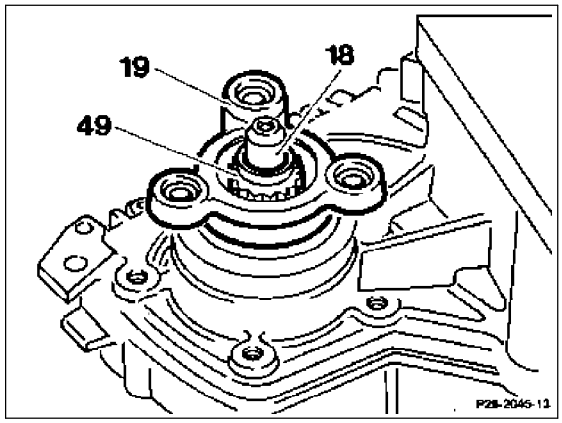

2 Measure dimension "**X2**" between intermediate housing (26) and output shaft gear (18) with feeler gauge.

X2=0.2 mm (constant)

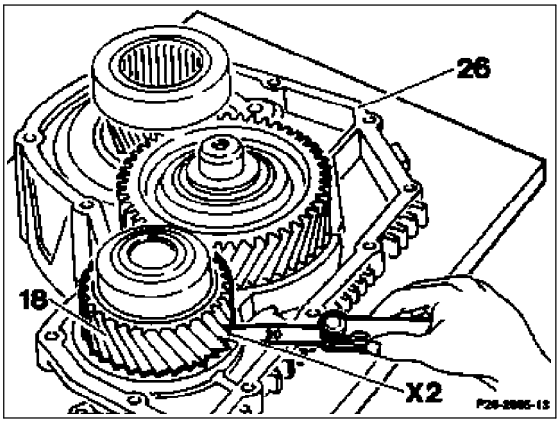

3 To adjust to the dimension "**X2**", remove bearing outer ring and insert suitable spacer.

4 Remove bearing outer rings (51a and 50c), output shaft (18), intermediate gear (17) and gear drive (8).

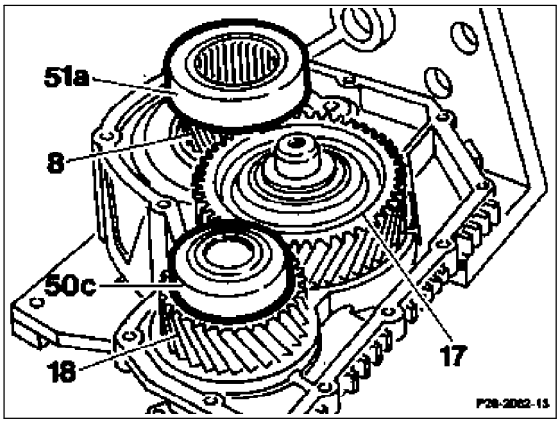

5 Drive out bearing outer ring (50b) using suitable mandrel, install spacer (50e) depending on measured value.

Spacers are available in thicknesses of 0.05; 0.1; 0.3 and 0.5 mm.

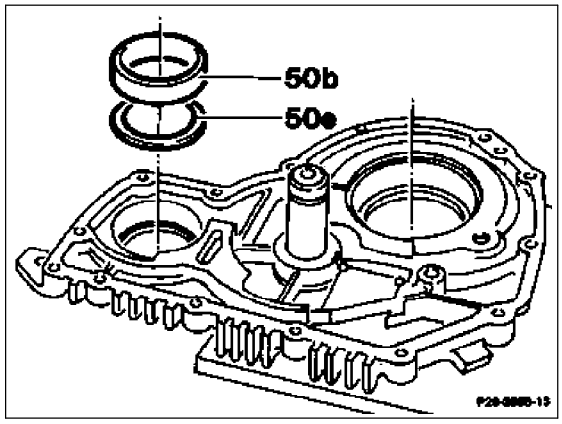

6 Using mandrel (030) 201 589 00 15 00, press in bearing outer ring (50b) until it abuts.

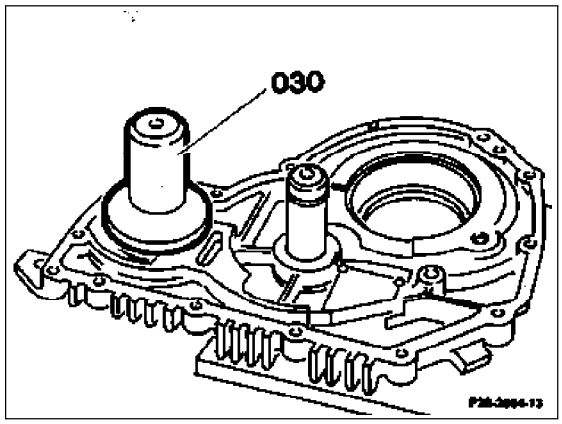

7 Check dimension "**X2**".

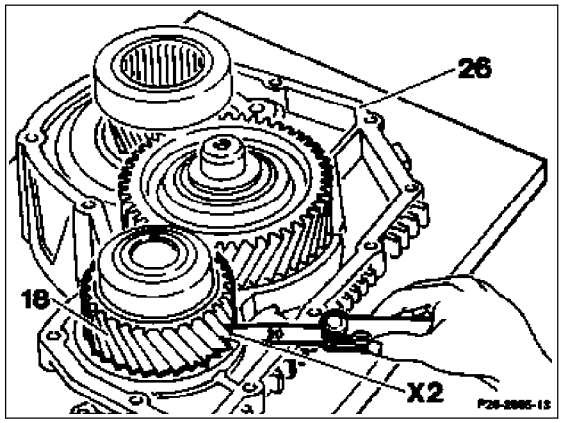

8 Measure dimension "**X1**" between intermediate housing and intermediate gear (17) using feeler gauge. Insert spacer depending on the measured value.

X1=0.2 mm (constant)

Spacers are available in thicknesses of 0.05; 0.1; 0.3 and 0.5 mm.

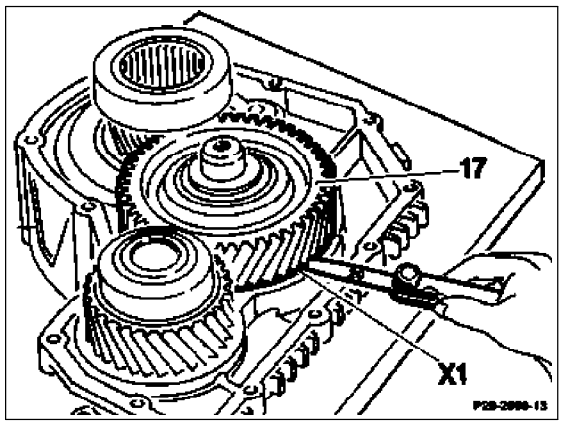

9 Mount bearing outer rings (51a, 50c) on the gear drives and output shaft.

10 Mount pressure members (53, 54, 55) on the bearing outer rings (51a, 50c).

11 Mount retaining plate 124 589 23 21 00 and fasten to the transfer case housing.

12 Tighten bolts (56, 57, 58) to 1 Nm, centering the pressure member at the same time.

Note

The tightening torque of 1 Nm corresponds to a bearing pre-load of 0.05 mm.

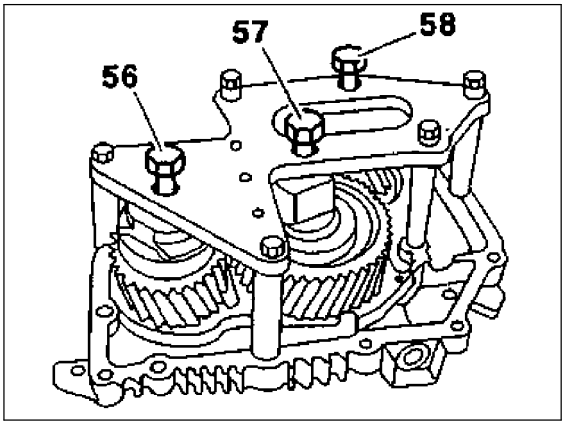

P28-5089-13

13 Measure dimension "**a**" between the joint face of the transfer case housing and the bearing surface of the bearing outer ring and enter in shop-made table.

Measuring bridge 126 589 04 31 00,
magnet holder 116 589 12 21 00,
dial gauge 001 589 82 21 00.

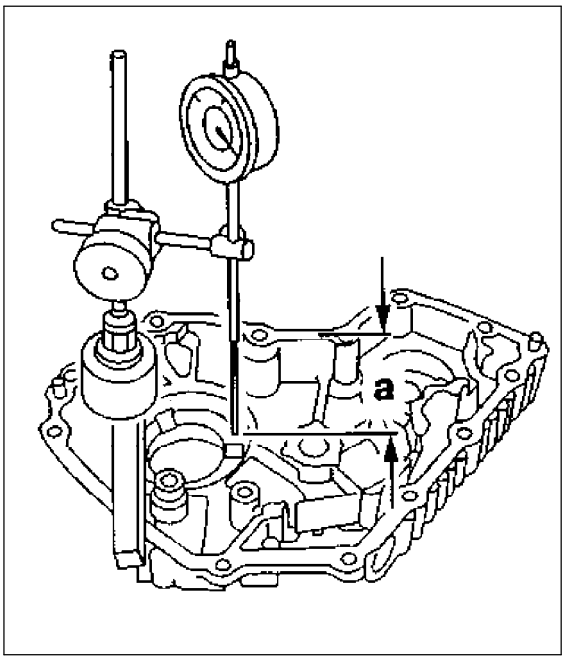

P28-5088-15

14 Measure dimension "**b**" between bearing outer ring and joint face of intermediate housing and enter in shop-made table.

Magnet holder 116 589 12 21 00,
Dial gauge 001 589 82 21 00.

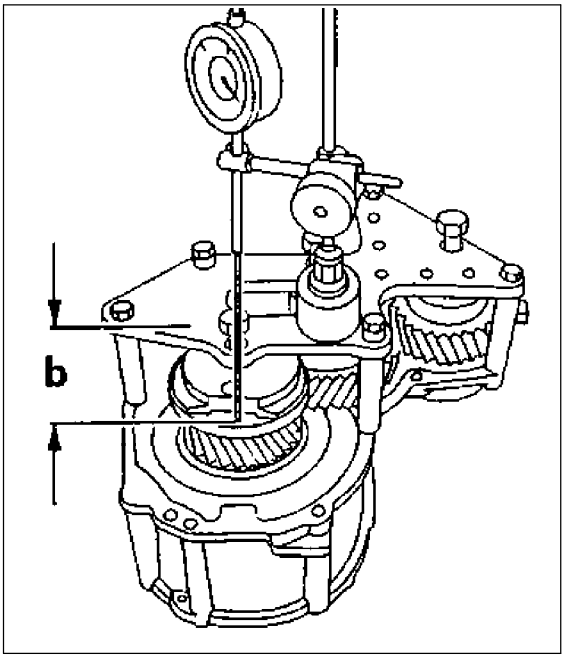

P28-5087-15

Examples

Gear drive			
Dimension	"**a**"	51.42	mm
Dimension	"-**b**"	-51.11	mm
Difference		0.31	mm
Actual spacers installed		0.30	mm

Install or remove spacers with aid of table.

Note

When determining the thickness of the spacer, round off value downwards.

15 Measure dimension "**c**" between joint face of transfer case housing and bearing surface of bearing outer ring and enter in shop-made table.
Measuring bridge 126 589 04 31 00,
magnet holder 116 589 12 21 00,
dial gauge 001 589 82 21 00.

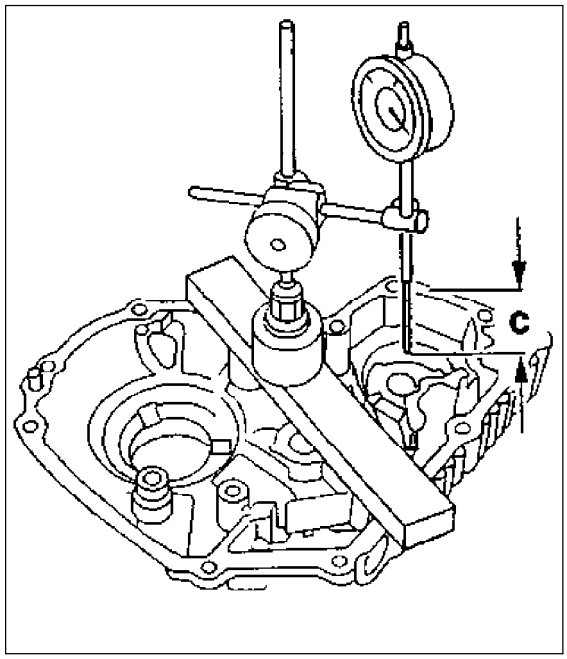

P28-5085-15

16 Measure dimension "**d**" between bearing outer ring and joint face of intermediate housing and enter in shop-made table.
Magnet holder 116 589 12 21 00
Dial gauge 001 589 82 21 00.

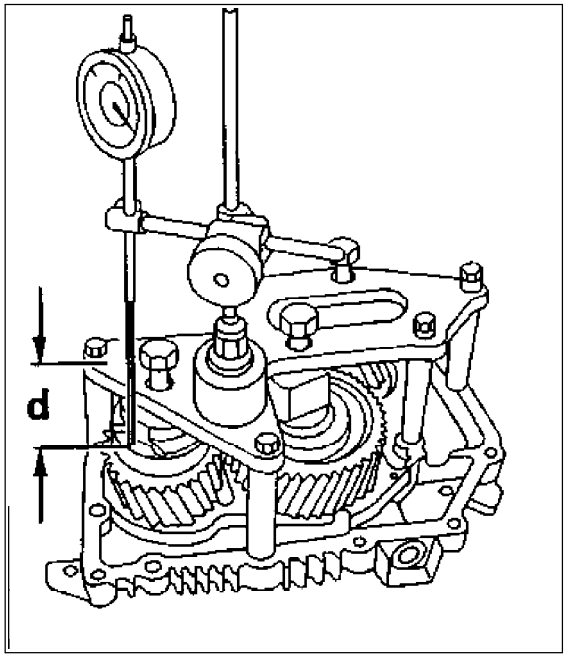

P28-5086-15

Output shaft			
Dimension	"**c**"	51.23	mm
Dimension	"- **d**"	-50.88	mm
Difference		0.35	mm
Actual spacers installed		0.35	mm

Install or remove spacers with aid of table.

Note

When determining the thickness of the spacers, round off value downwards.

17 Measure dimension "**e**" between joint face of transfer case housing and bearing surface of tapered roller bearing inner ring and enter in shop-made table.
Measuring bridge 126 589 04 31 00,
magnetic holder 116 589 12 21 00,
dial gauge 001 589 82 21 00.

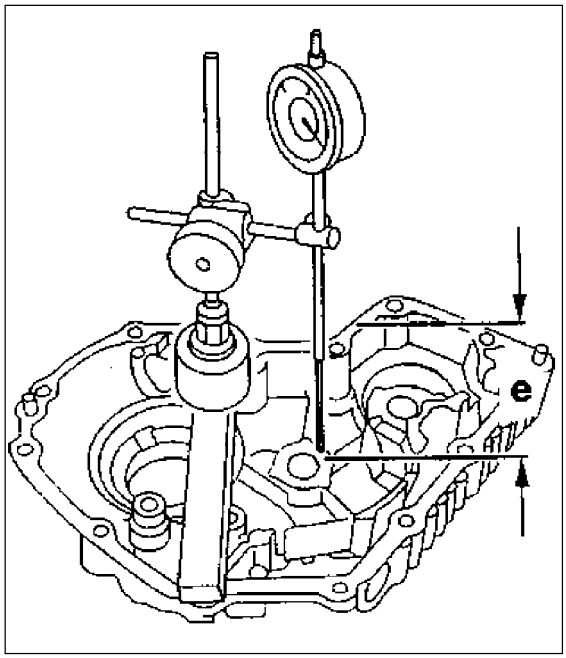

P28-5084-15

18 Measure dimension "**f**" between joint face of intermediate housing and bearing inner ring and enter in shop-made table.
Magnet holder 116 589 12 21 00,
Dial gauge 001 589 82 21 00.

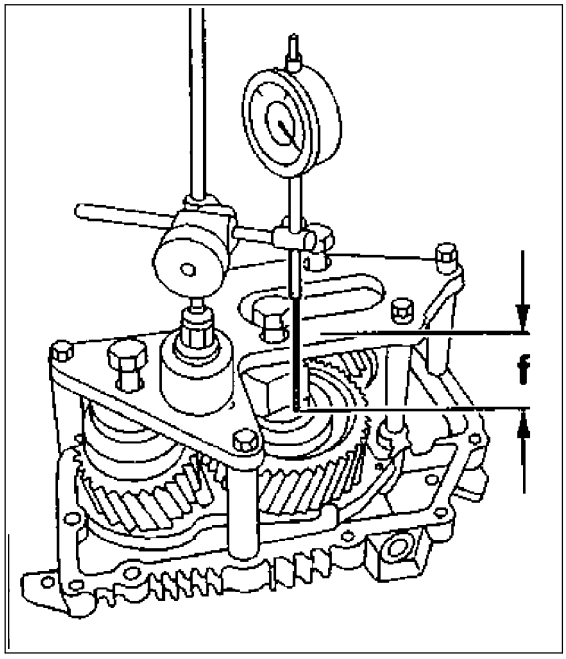

P28-5083-15

Intermediate gear			
Dimension	"**e**"	37.69	mm
Dimension	"- **f**"	-37.17	mm
Difference		0.52	mm
Actual spacers installed		0.50	mm

Install or remove spacers with aid of table.
Note
When determining the thickness of the spacers, round off value downwards.

Checking the output torque

19 Install bearing outer rings of transfer case housing (28-300, section J).

20 Screw on 3-arm flange at front axle and measure output friction coefficient using a friction coefficient tester.

Specified value: 15 - 25 Nm

Note

If the output friction coefficient is excessive or insufficient, a mistake was made when measuring the bearing preload.

In this case, repeat the complete measurement.

28-301 Repairing multi-disk stack of center differential lock (ZS)

Preceding work:
Sun gear shaft removed (28-300, section A).

A. Dismantling and assembling (up to transfer case no. 26 616)

Dismantling and assembling (production up to 05/91)

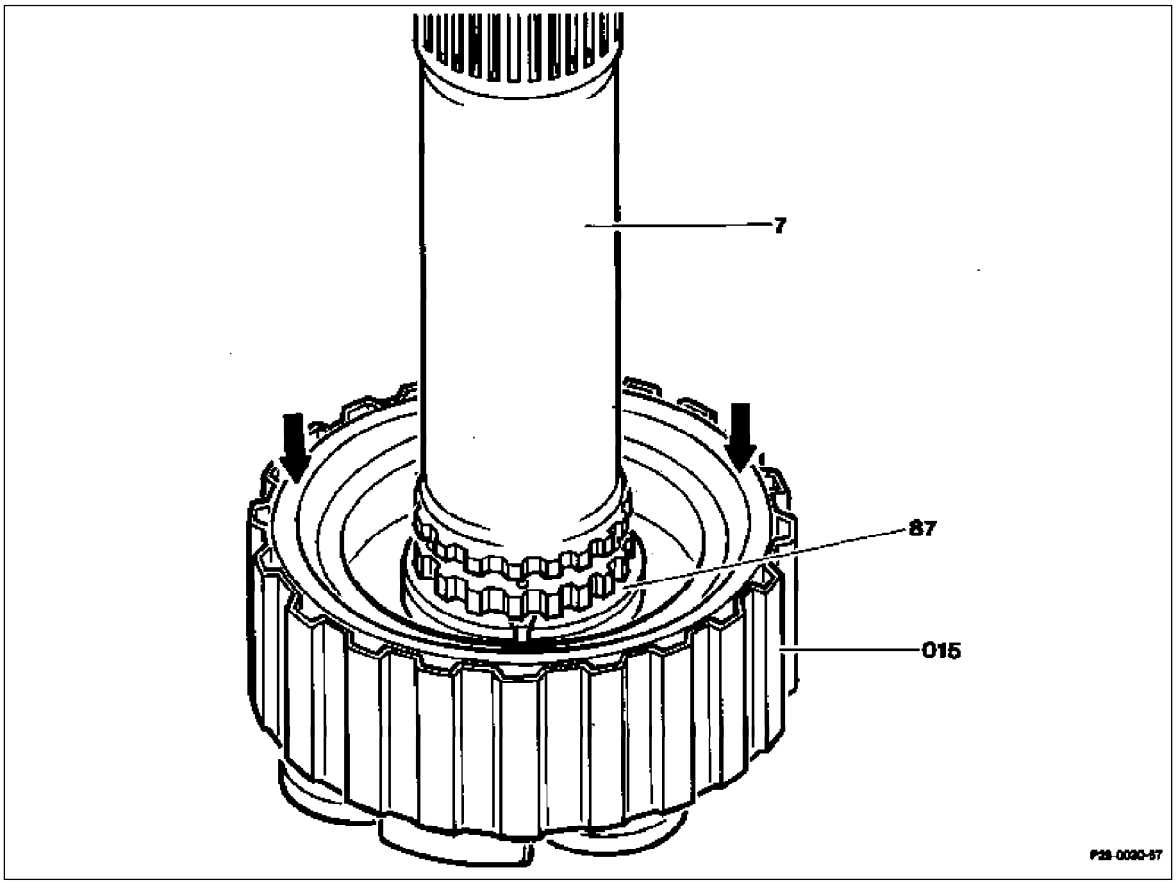

Snap ring (87)	Remove, install. Mount locator (015) on sun gear shaft (7). Press down multi-disk stack using suitable press at the marked position (arrows).
	Pliers 000 589 52 37 00,
	Locator 124 589 04 31 00.

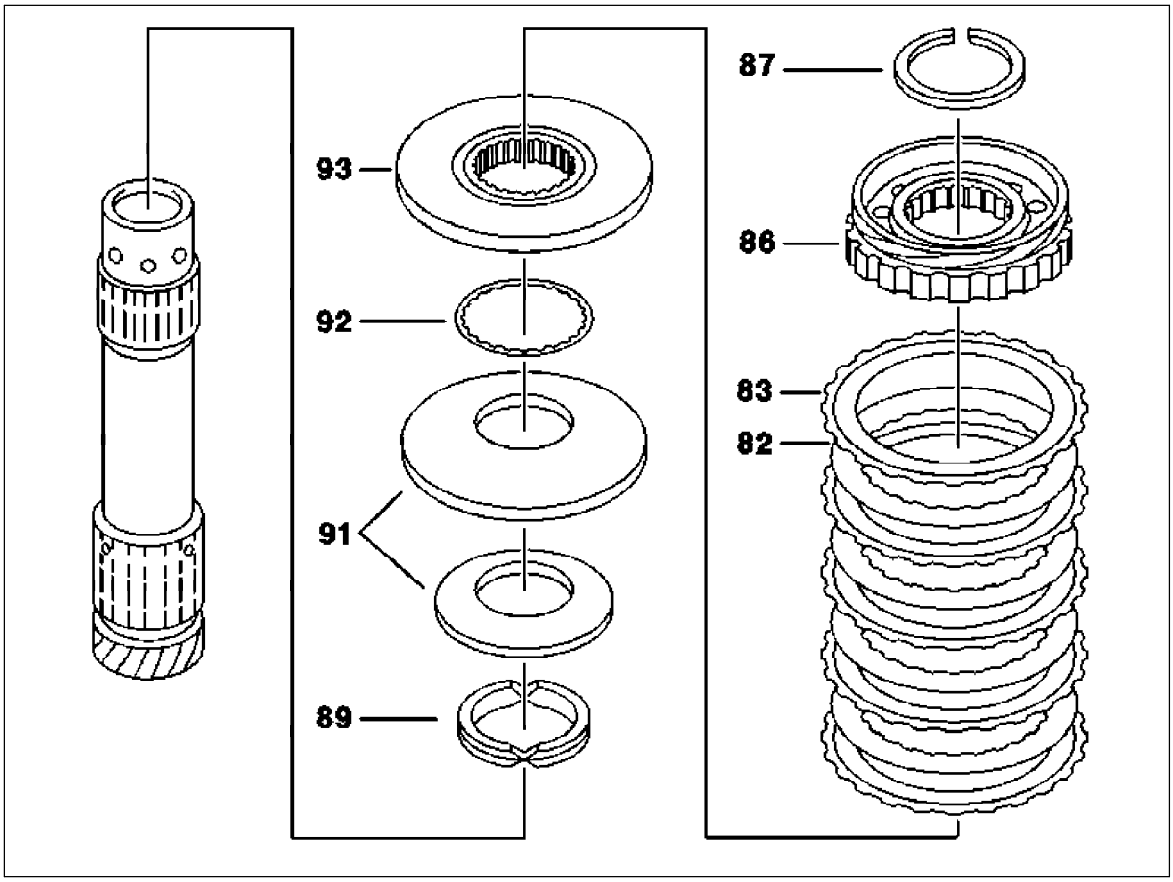

P28-5052-57

Inner multi-disk carrier (86)	Remove, install.
Multi-disk stack	Remove, check for burnt spots and evidence of settling. When installing, place new multi-disks in ATF oil for approx. 1 hour.
Pressure plate (93)	Remove spacer ring (92) and diaphragm spring (91).
	Note The diaphragm spring (91) always consists of two parts, either diaphragm spring with narrow shim or diaphragm spring with support spring.
Locking halves (89)	Remove, install.
Multi-disk stack	Measure.

Special tools

124 589 04 31 00
28

000 589 52 37 00
26 27

B. Measuring (up to transfer case no. 26 616)

Multi-disk stack of center differential lock (ZS) without automatic adjustment

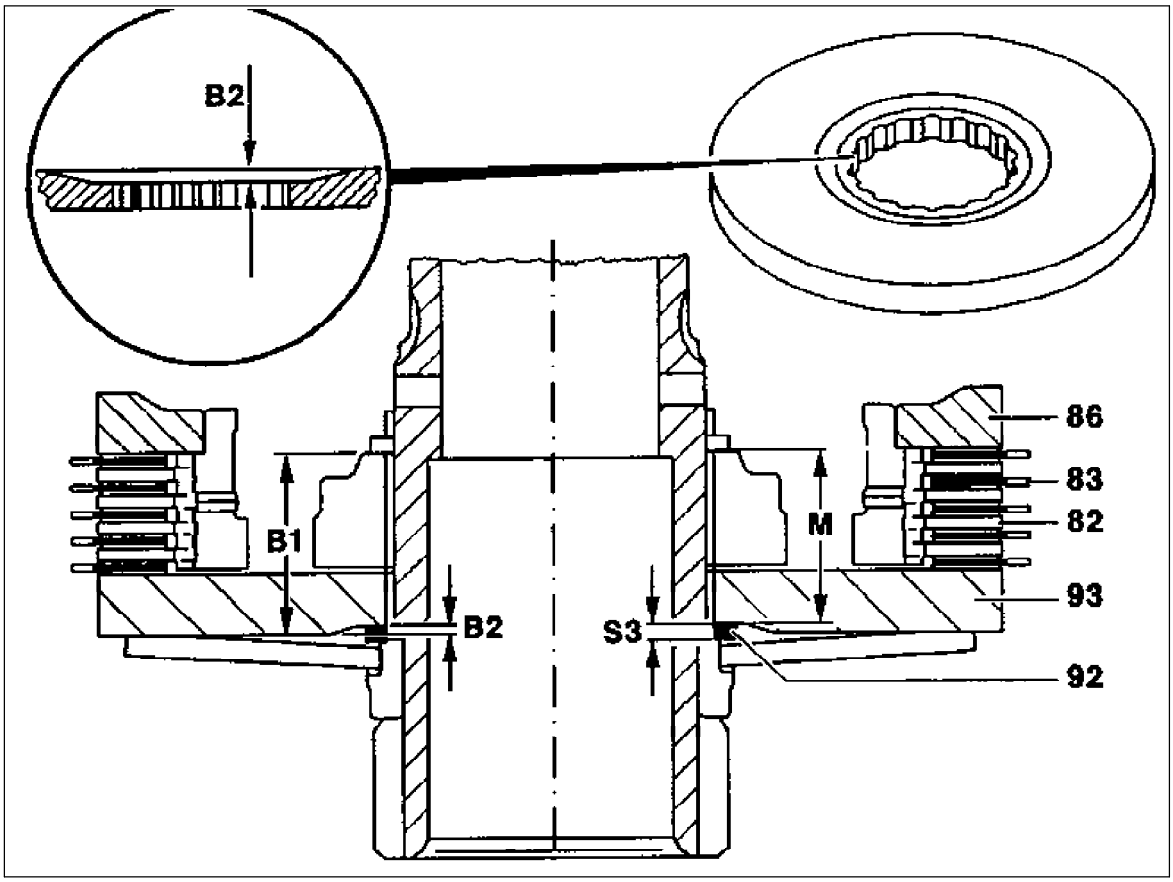

P28-5054-57

82	Inner multi-disk	92	Spacer ring
83	Outer multi-disk	93	Pressure plate
86	Inner multi-disk carrier		

Dimension "B1" _____ Measure. During the measurement, compress multi-disk stack (82 and 83) in the inner multi-disk carrier (86) by hand (numbers 1 and 2).

Dimension "B2" _____ Measure at pressure plate (93) using a depth gauge (number 3)

Dimension "M" _____ Specified value 25.25 mm up to 25.85 mm (number 4).
Dimension "M" = (B1 - B2).

Thickness "S3" of spacer ring (92) _____ Calculate (number 5).
S3 = 27.9-(M+0.35).

Note

The dimensions 27.9 mm and 0.35 mm are specified by design.

Spacer rings (92) are available in thicknesses of 1.5 mm to 2.3 mm in increments of 0.1 mm.

Measuring

1 Measure dimension "B1".

Place pressure plate and inner multi-disk carrier with multi-disk stack on a measuring plate.

2 Using a caliper gauge measure from the hub of the inner multi-disk carrier to the measuring plate. During the measurement the multi-disk stack must be compressed by hand (arrows).

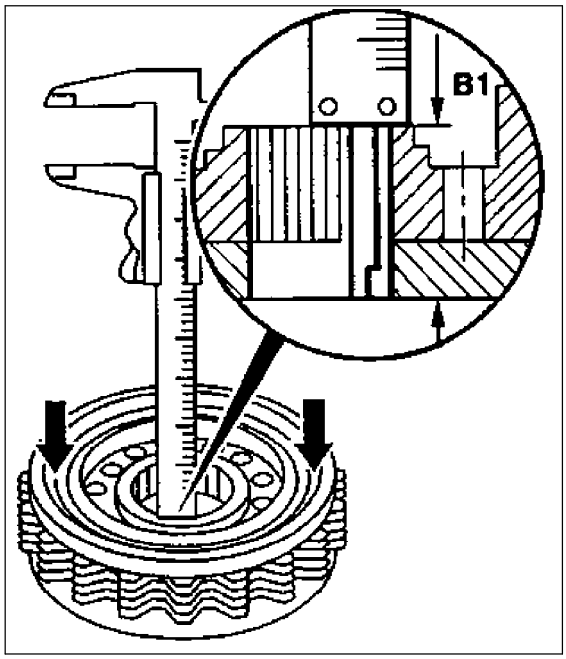

P28-5082-15

3 Measure dimension "B2".

Measure turned groove of pressure plate (93) with a depth gauge.

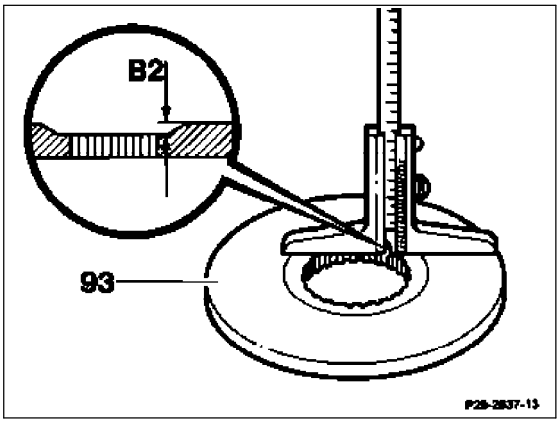

4 Calculate dimension "M".

Specified value 25.25 mm - 25.85 mm

Calculation formula: B1-B2 = M

Example:

B1= 26.7 mm

B2= 1.2 mm

M=26.7 mm-1.2 mm=25.5 mm

If the dimension "M" does not correspond to the specified value, it must be corrected by inserting suitable steel multi-disks.

Steel multi-disks are available in thicknesses of 1.8 mm and 2.0 mm.

5 Calculate thickness S3 of spacer ring.

Calculation formula: S3 = 27.9-(M + 0.35)

Note

The dimensions 27.9 mm and 0.35 mm are specified by design.

Example:

27.9 - (M 25.5 + 0.35)=25.85

27.9 - 25.85=2.05

S3=2.05

A spacer ring of 2.1 mm thickness is to be installed.

Spacer rings are available in thicknesses of 1.7 mm to 2.3 mm in increments of 0.1 mm.

C. Dismantling and assembling (as of transfer case no. 26 617)

Multi-disk stack of center differential lock (ZS) with automatic adjustment

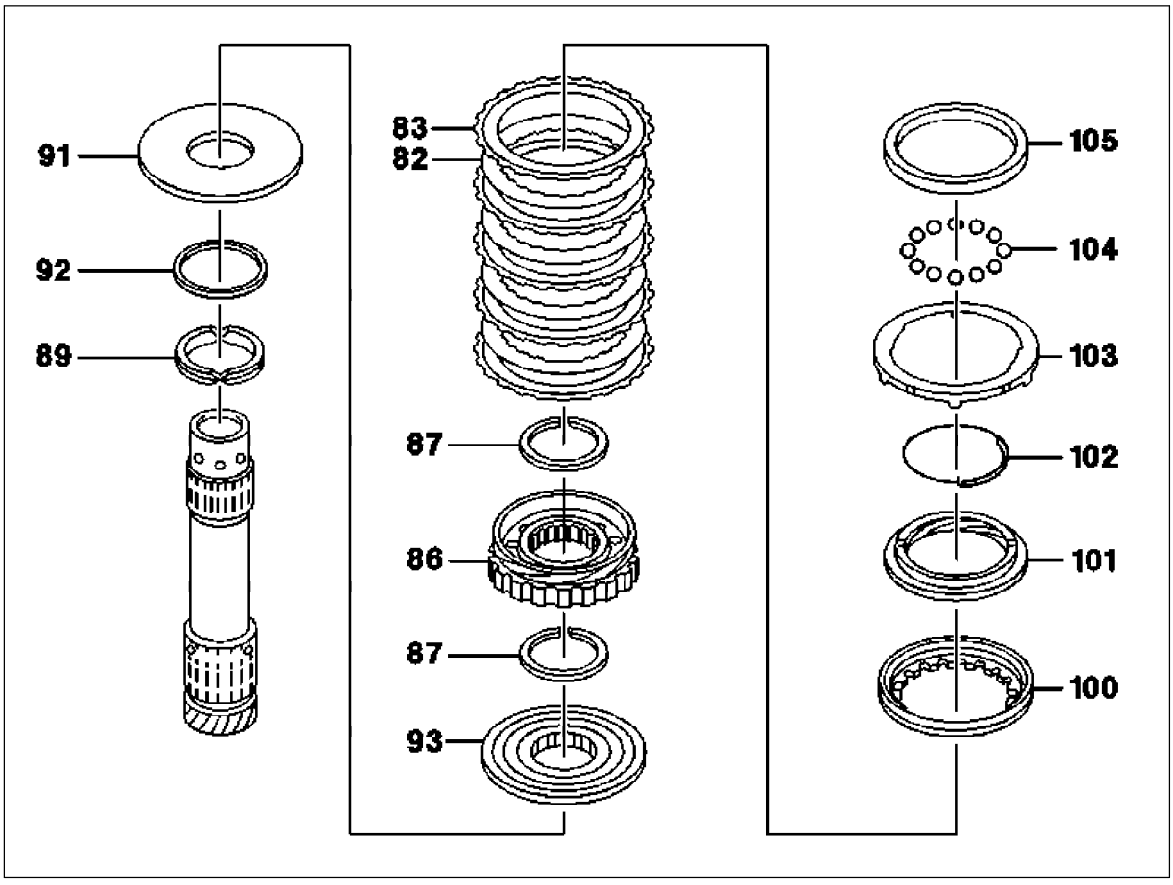

P28-5049-57

82	Inner multi-disk	93	Pressure plate
83	Outer multi-disk	100	Final disk
86	Inner multi-disk carrier	101	Adjusting nut (left-hand thread)
87	Circlip	102	Wire circlip
89	Circlip (2-piece)	103	Closing plate
91	Disk spring	104	Balls
92	Spacer ring	105	Thrust washer

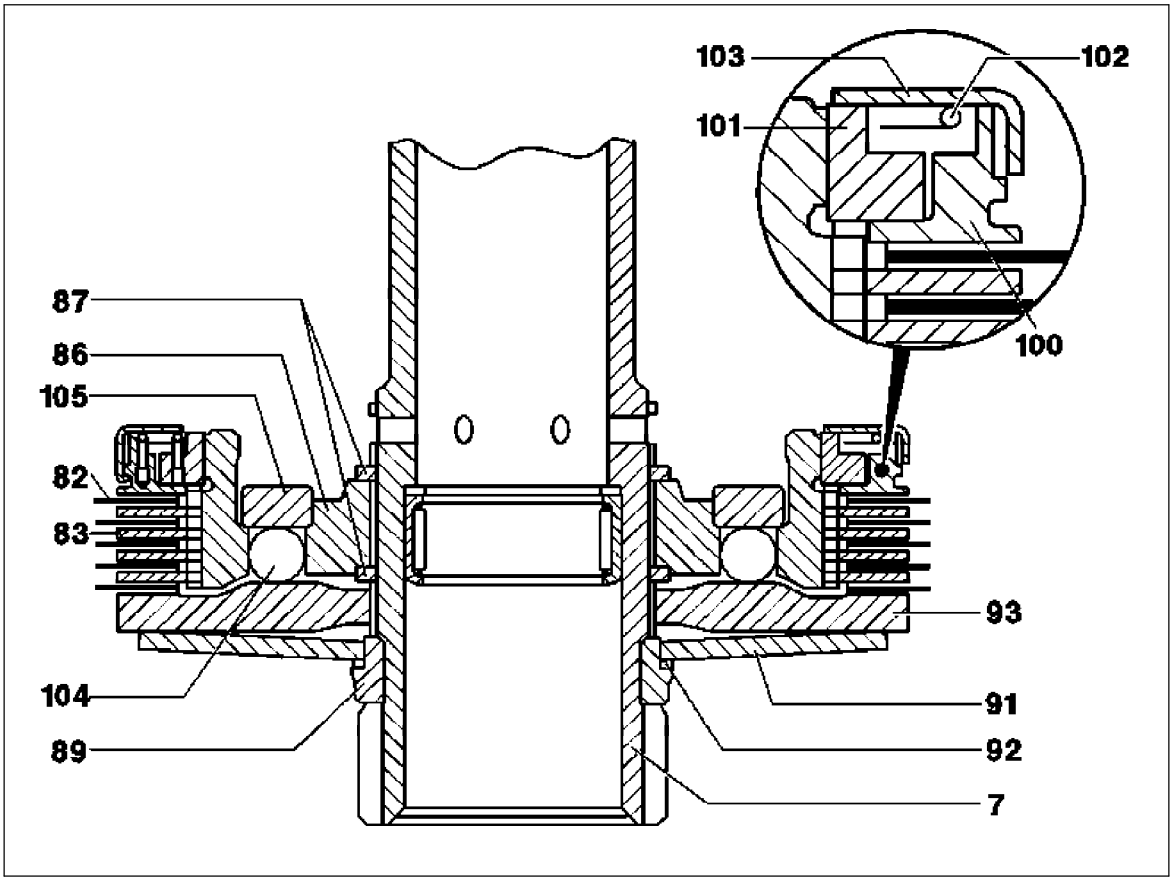

P28-5053-57

7	Sun gear shaft	93	Pressure plate
82	Inner multi-disk	100	Final disk
83	Outer multi-disk	101	Adjusting nut (left-hand thread)
86	Inner multi-disk carrier	102	Wire circlip
87	Circlip	103	Closing plate
89	Circlip (2-piece)	104	Balls
91	Disk spring	105	Thrust washer
92	Spacer ring		

Shop-made tool
Assembly sleeve (Material - structural steel ST37)

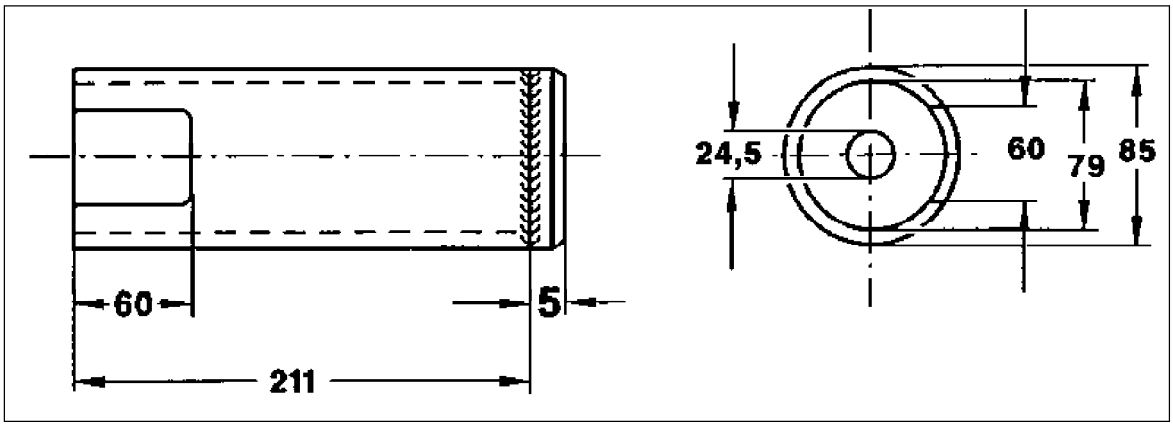

P28-5050-53

Special tools

124 589 04 31 00
28

000 589 52 37 00
26 27

Dismantling

1 Bend up all securing clips and carefully remove closing plate (103).

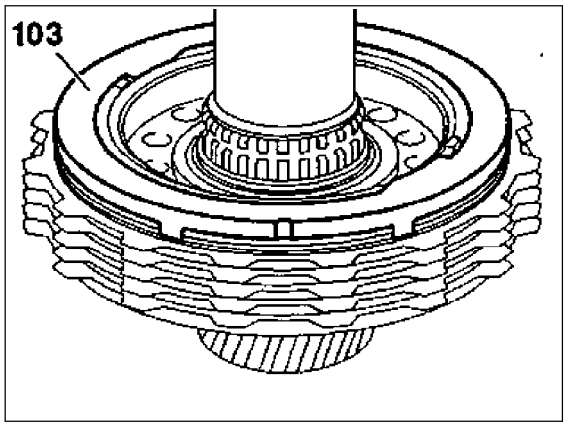

P28-5066-13

2 Remove wire circlip (102). Insert balls (104) and thrush washer (105).

Note

Observe installed position of thrust washer (105).

One-piece contact surface points towards the axial bearing.

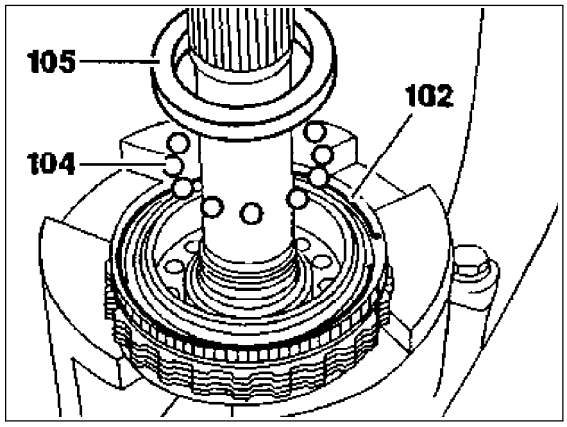

P28-5058-13

3 Mount assembly sleeve (016) and preload disk spring using the clamping device 201 589 00 63 00 or a hydraulic press.

Note

To preload the disk springs, clamp the shaft in a vise, push on sun gear shaft with center differential lock clutch and tighten tensioning nut using a box wrench WAF 32.

4 Unscrew adjusting nut (101). Remove circlip (87) from the groove using pliers 000 580 53 37 00 and push upwards.

Note

Adjusting nut with left-hand thread

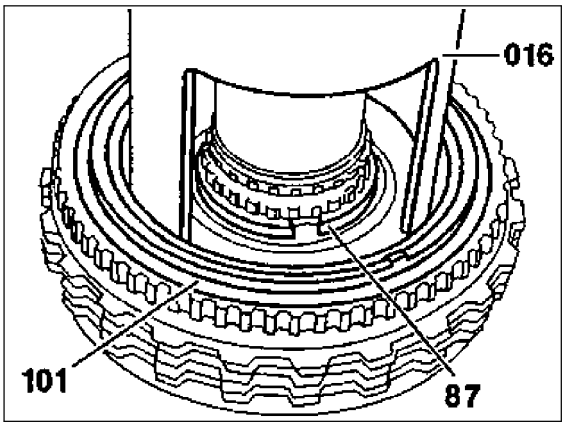

P28-5063-13

5 Remove assembly sleeve (016).

6 Remove multi-disk stack (82, 83).

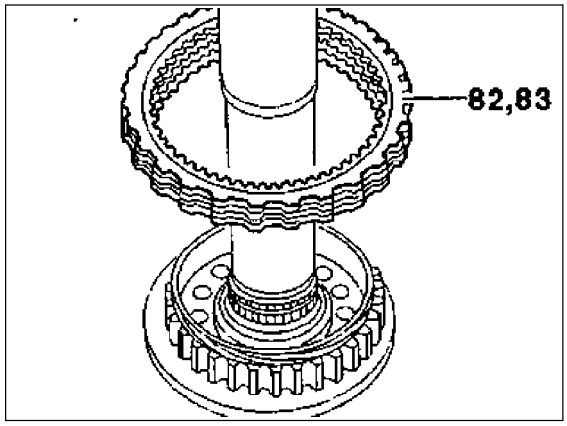

P28-5065-13

7 Remove inner multi-disk carrier (86) with balls (104) and thrust washer (105).

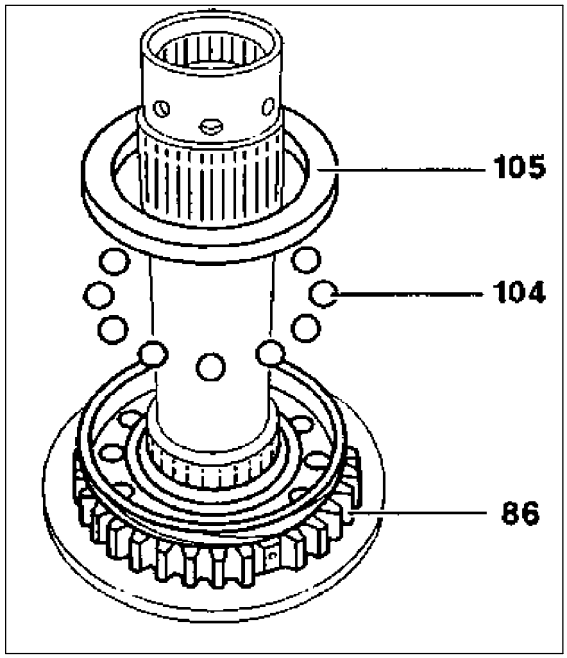

P28-5064-15

8 Mount assembly sleeve (016) and preload disk spring.
9 Remove circlip (87) from the groove using pliers and push upwards.

10 Remove assembly sleeve (016).

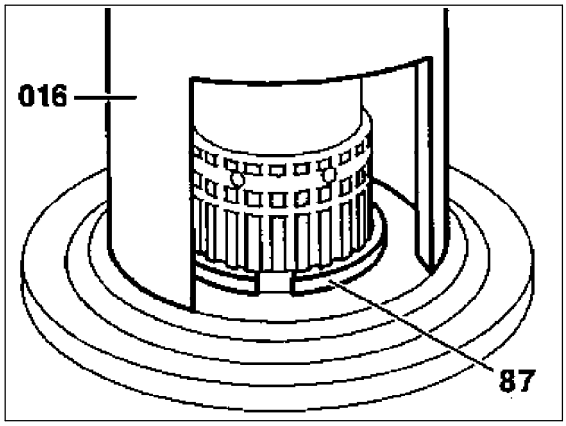

P28-5061-13

11 Remove pressure plate (93), disk spring (91) with spacer ring (92) and 2-piece circlip (89).

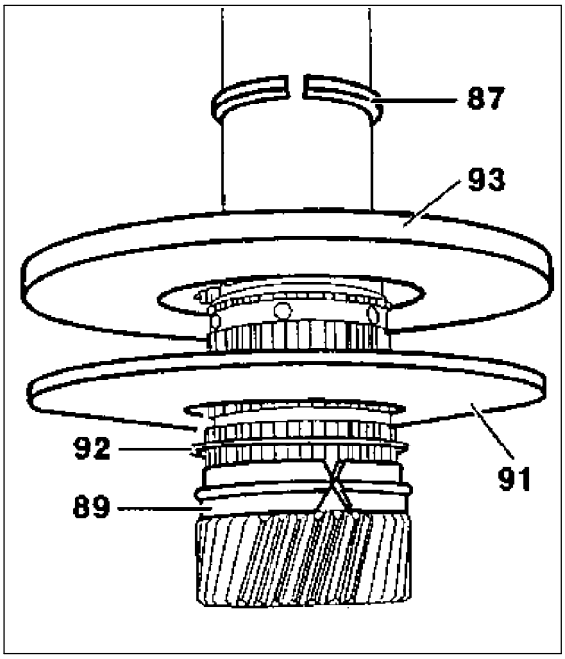

P28-5059-15

Assembly

12 Push on 2-piece circlip (89), spacer ring (92), disk spring (91), thrust plate (93) and circlip (87).

13 Mount assembly sleeve (016) and preload disk spring.
14 Insert circlip (87) in the groove of the sun gear shaft using pliers.

15 Remove assembly sleeve (016).

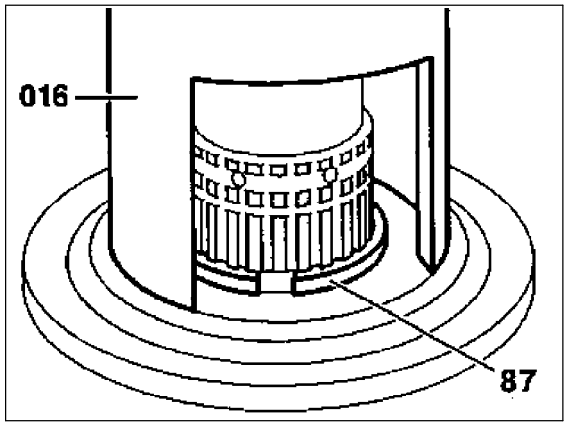

P28-5061-13

16 Push on inner multi-disk carrier (86) and circlip (87) and insert balls (104) and thrust washer (105).

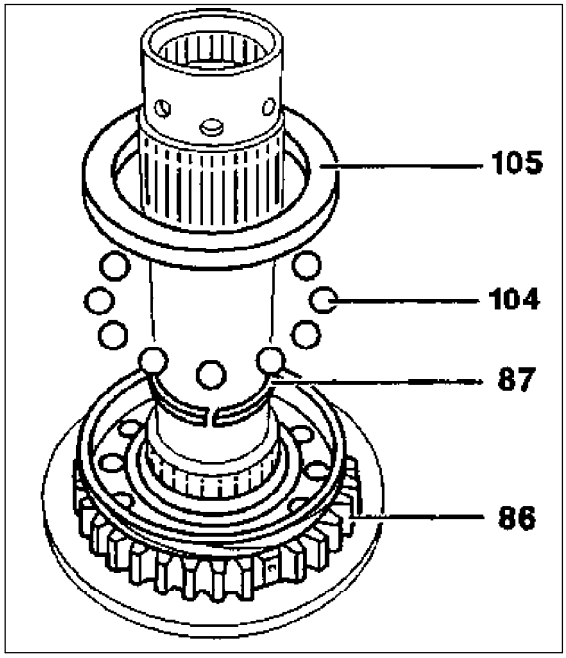

P28-5062-15

17 Mount assembly sleeve (016) and preload disk spring.
18 Mount circlip (87) in the groove of the sun gear shaft using pliers.

19 Remove assembly sleeve (016).

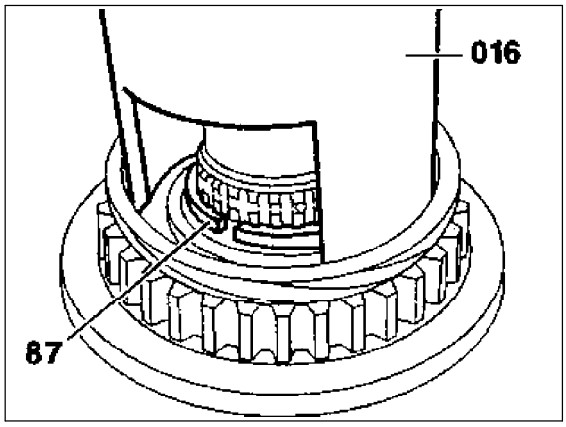

P28-5060-13

20 Mount outer multi-disks (83) and inner multi-disks (82) on the inner multi-disk carrier.
Note
Place new multi-disks in ATF oil for approx. 1 hour.

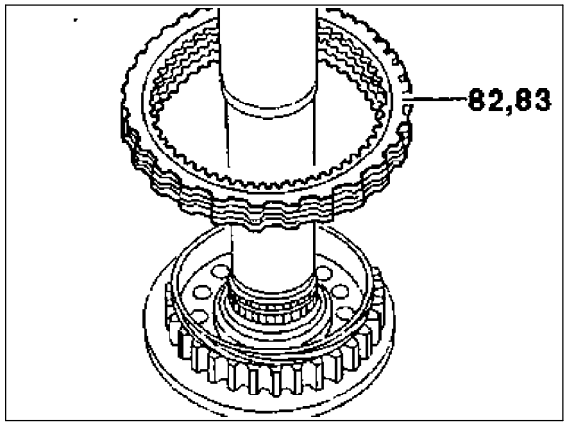

P28-5065-13

21 Insert final disk (100).

Note

Center multi-disk **exactly** on the splines of the inner multi-disk carrier.

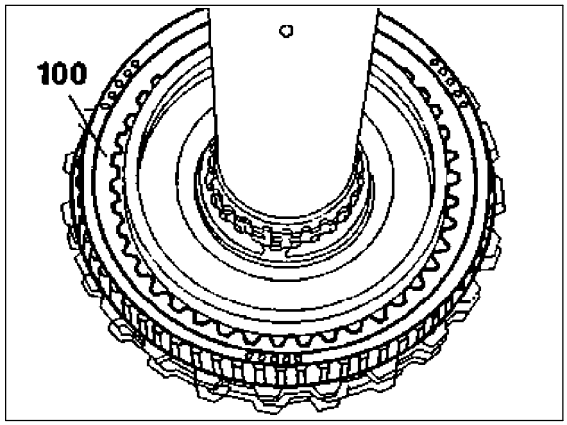

P28-5057-13

22 Insert sun gear shaft complete in the locator 124 589 04 31 00, centering the multi-disk stack at the same time.

23 Place adjusting nut (101) on the inner multi-disk carrier (86).

24 Mount assembly sleeve and preload disk spring.

25 Screw on adjusting nut (101) until there is a distance of approx. 3 cm (A) between the center bore of the adjusting nut (101) and the center bore of the final disk (100).

Note

Only assemble adjusting nut (101) **loosely**.
The dimension (A) can be corrected by relocating the final disk (100).

26 Remove assembly sleeve.

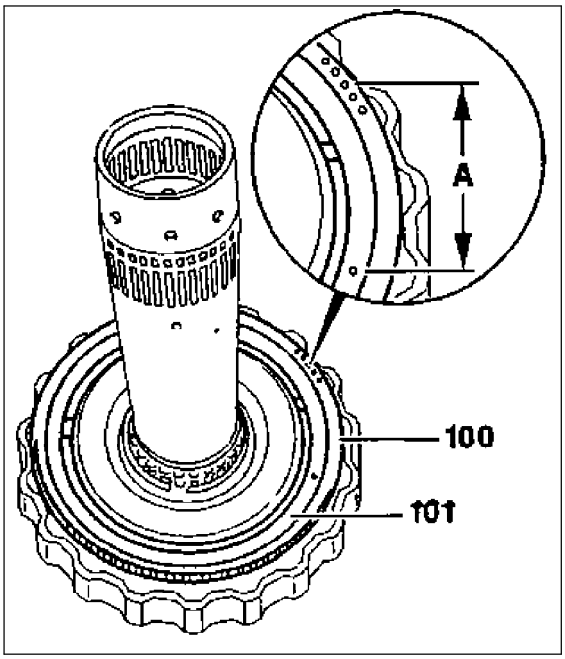

P28-5055-15

27 Insert the wire circlip (102) so that this contacts the outer circumference of the final disk (100) for at **least 90°, but a maximum of 270°.**

Checking automatic adjustment

Mount assembly sleeve (16) and preload disk spring, observing whether the wire circlip (102) adjusts the adjusting nut (101) **automatically** due to its spring force.

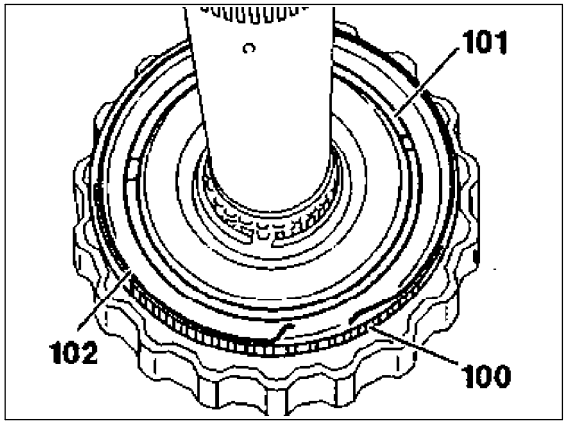

P28-5056-13

Note

If the adjusting nut (101) has **not adjusted** itself when the load on the disk spring (91) is relieved, the center differential lock is excessively preloaded or a mistake was made during assembly.
Dismantle the sun gear again and rebuild from item 12.

28 Mount closing plate (103) and carefully bend over all securing clips.

Note

When bending over the securing clips, ensure that no outer multi-disk is damaged.

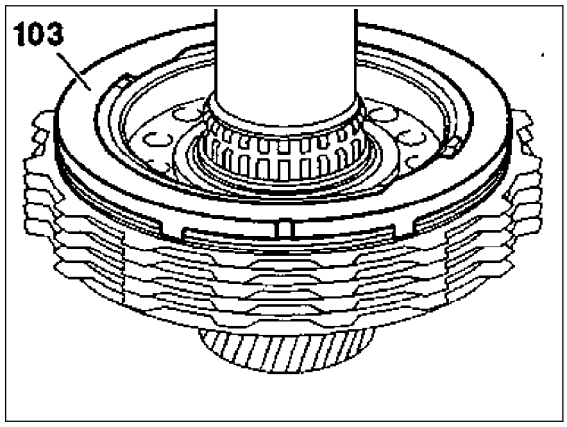

P28-5066-13

Preceding work:
Outer multi-disk carrier of front axle drive train (AV) removed (28-300, section C).

A. Dismantling and assembling

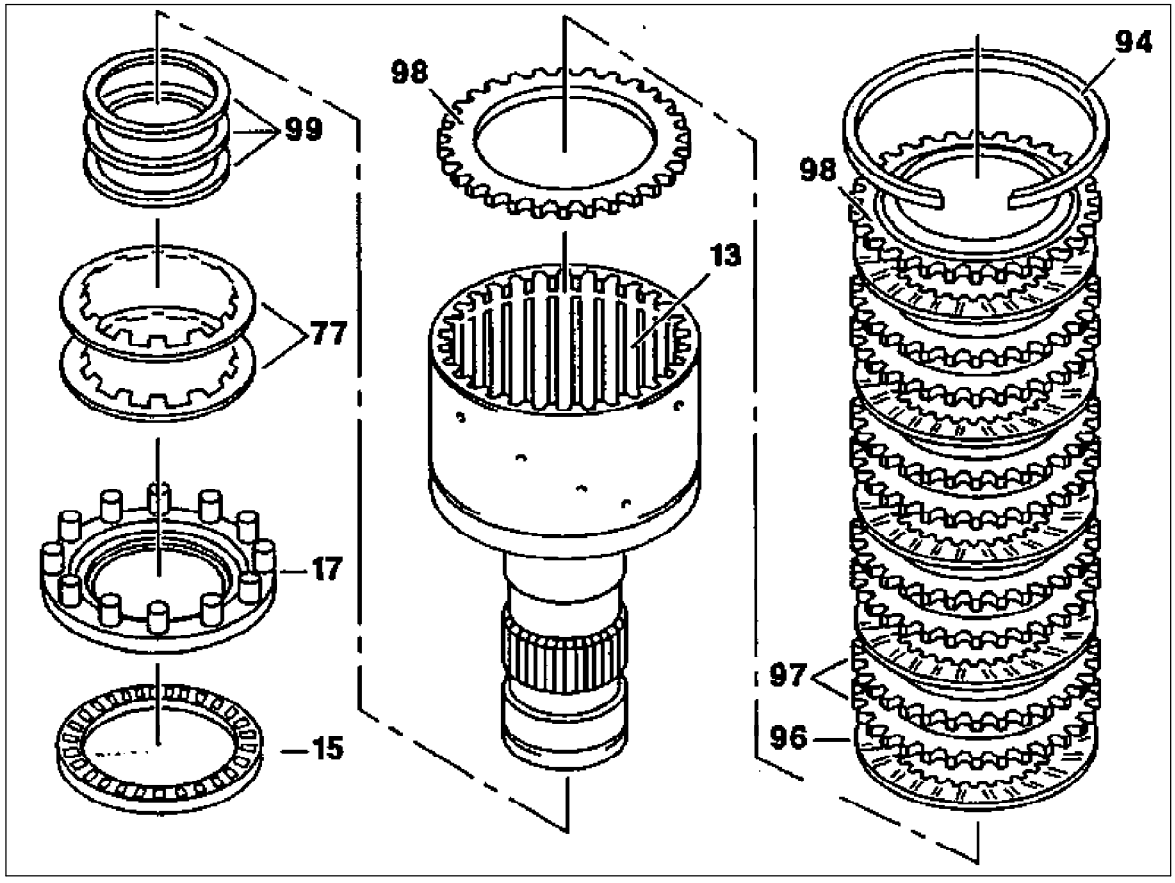

P28-5078-57

Snap ring (94)	Remove, install. Remove multi-disk stack. Replace burnt disks.
Final disk (98)	Install. Alternately install one inner multi-disk (96) and two outer multi-disks (97).
	Note Place new disks in ATF oil for approx. 1 hour prior to assembly.
Outer multi-disk carrier of front axle drive train (AV)	Measure.

B. Checking pre-load of front axle drive train disk spring and adjusting, if necessary.

Note

This check is only required after replacing the transfer case housing, the front axle drive train piston or thrust pad.

1st version: Transfer case no. 1 to 13 710

1 The dimension "**S1**" is adjusted by inserting different shims (99).

Basic dimension: S1=0.9 mm

Shims are available in the following thicknesses 0.5; 0.6; 0.7; 0.8 and 0.9 mm.

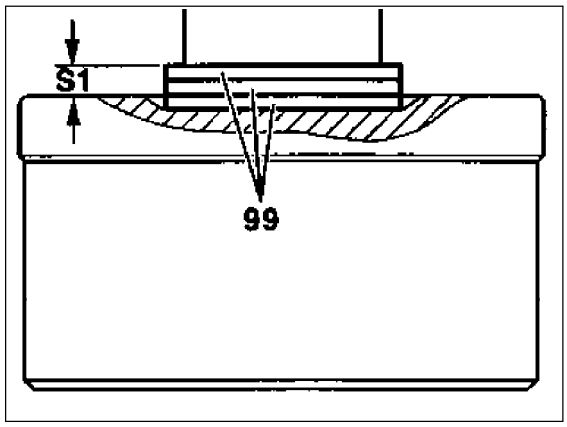

P28-5074-13

2nd version: Transfer case no. 13 711 to 26 616
The dimension "S1" is specified by the design. Adjustment via shims is not necessary.

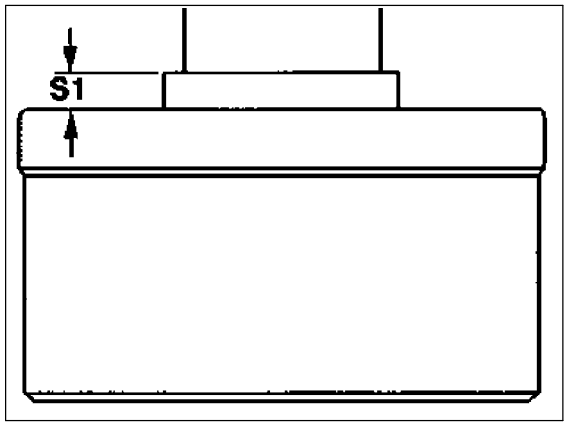

P28-5079-13

3rd version: Transfer case no. 26 617 !
Calculate dimension "**A1**".

2 Determine the dimension "**C**" between the end face of gear and sealing surface of the transfer case housing using measuring bridge 124 589 03 31 00 and depth gauge.

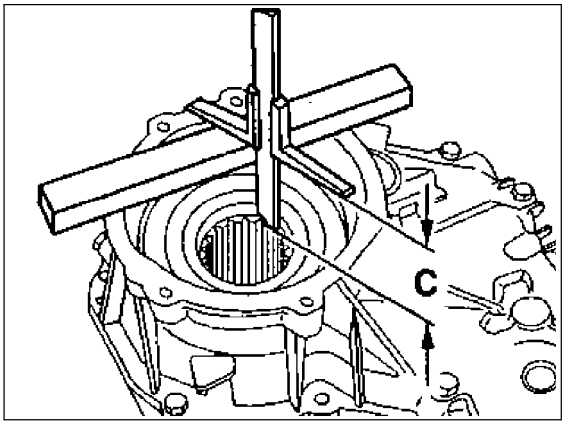

P28-5072-13

3 Determine the dimension "**D**" between the stop face of thrust bearing and sealing surface of the transfer case housing using measuring bridge 124 589 03 31 00 and depth gauge.

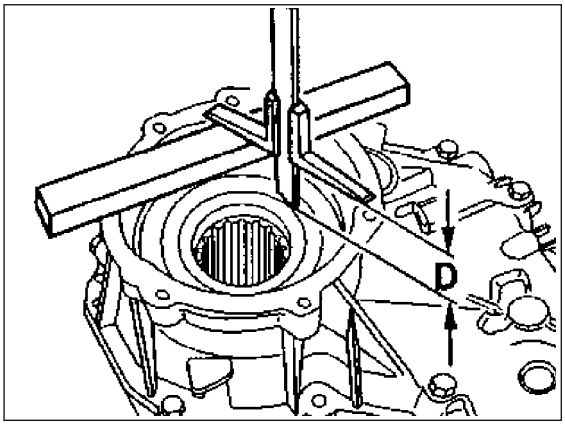

P28-5077-13

4 Calculate dimension "**A1**"

Calculation formula: A1 = C - D

Specified dimension: 19.5 - 20.1 mm

Example:

C = 88.4 mm

D = 68.4 mm

A1 = 88.4 - 68.4 mm = 20.0 mm

5 Determine thickness "**S1**" of shims.

Calculation formula: S1 = 21.8 - A1

Specified dimension: 1.6 - 2.3 mm

Note
The dimension 21.8 mm is specified by design.

Example:
A1 = 20.0 mm
S1 = 21.8 - 20.0 = 1.8 mm

Two shims (99) of 0.9 mm thickness are to be inserted.
Shims are available in the following thicknesses 0.5; 0.6; 0.7; 0.8 and 0.9 mm.

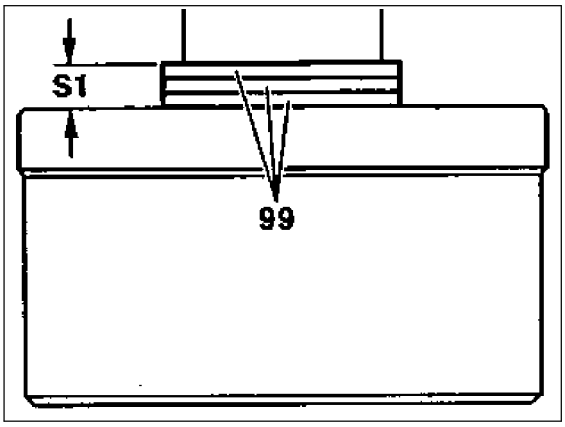

P28-5081-13

Parts note:
Only the outer multi-disk carrier of the front axle drive train with a flat surface is still delivered as a spare part. If this has to be replaced in a 1st or 2nd version of the transfer case, a 0.9 mm shim is to be inserted.

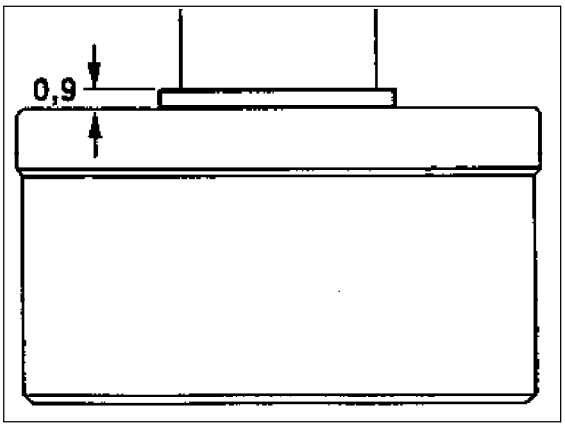

P28-5080-13

C. Checking multi-disk play of front axle drive train and adjusting, if necessary.

1 Install outer multi-disk carrier of front axle drive train in transfer case housing (28-300, section C).
2 Measure play "**S2**" between the final disk and inner multi-disk using a feeler gauge, while compressing the multi-disk stack (arrows).

Note

Specified dimension up to transfer case no. 26.616:
1.3 - 1.7 mm
Specified dimension as of transfer case no. 26.617:
0.6 - 1.0 mm

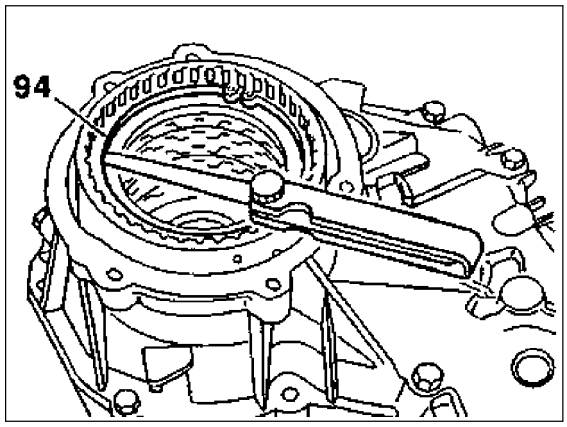

P28-5071-13

3 Correction of loose play "**S2**" depending on the version of the outer multi-disk carrier (different groove width) via snap rings (94) and/or outer multi-disks (95).

Note

Snap rings of 1.8 mm to 3.6 mm are available in increments of 0.2 mm and outer multi-disks of 1.8, 2.0 and 2.2 mm.

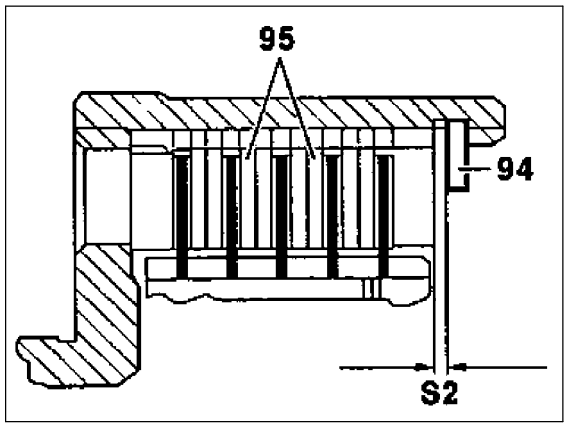

P28-5068-13

28-303 Testing front axle drive train (AV) and center differential lock (ZS) pistons for leaks

Preceding work:
Center differential lock (ZS) piston removed (28-300, section B).
Front axle drive train (AV) pistons removed (28-300, section D).
Transfer case detached (28-300. section E).

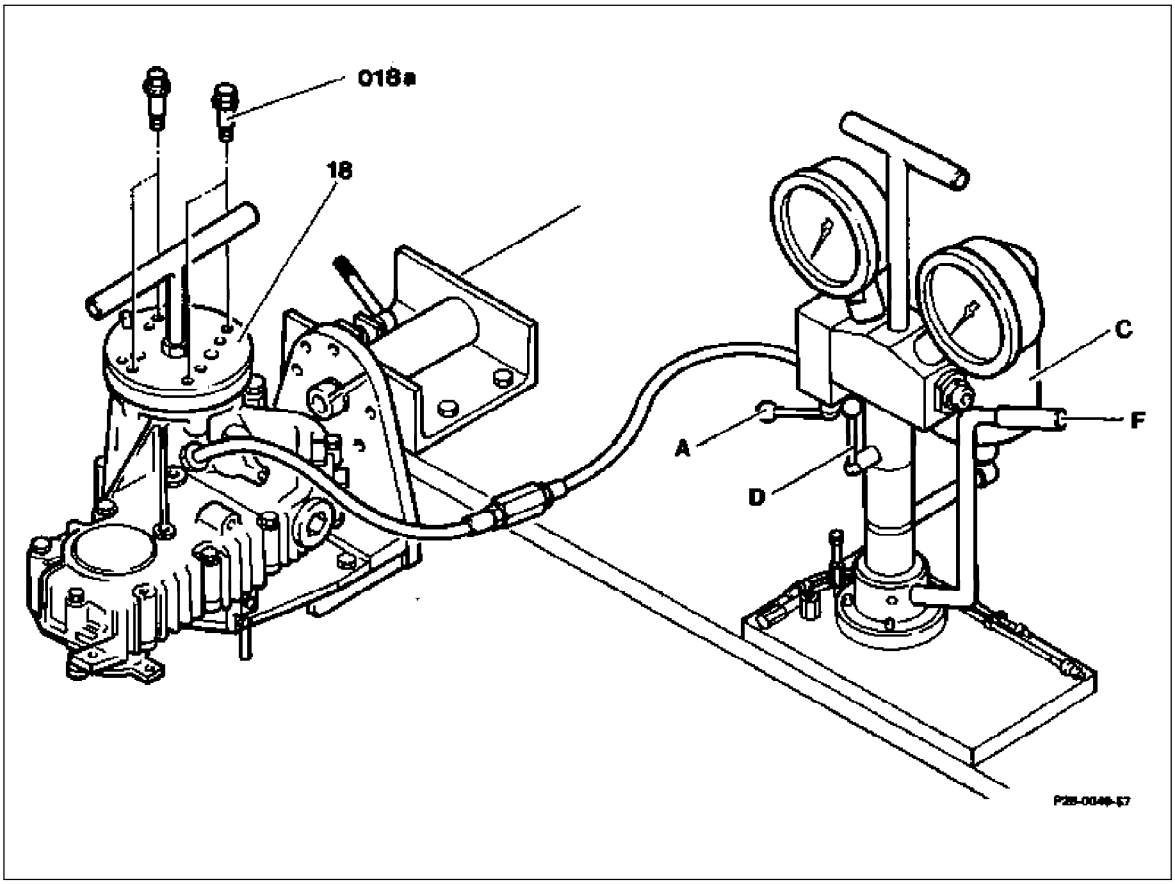

Note
The leakage test of the front axle drive train (AV) piston is shown in the illustration. The leakage test for the center differential lock (ZS) piston is carried out in the same way.

Leakage test of front axle drive train (AV) piston

Stop screws (018a) 124 589 02 14 02	Screw into the assembly fixture (018) 124 589 02 14 01.
Leak tester 124 589 13 21 00	Connect to front axle drive train (AV) connection.
Reservoir (C)	Fill approx. one-third full with hydraulic oil.
Valve "A"	Close. Open valve "D".
Vent valves of front axle drive train and center differential lock	Open or close, operate hand pump until hydraulic oil escapes without any bubbles.

Using hand pump (F) 4 times	Build up a pressure of 32 bar. To reduce pressure open and close valve "A". Build up a pressure of 32 bar again, close valve "D" and note pressure drop.
	Note The pressure of 32 bar should fall by a maximum of 3 bar within 60 s.
In accordance with test procedure	Open valve "A", wait until the pointer is in position 0. Disconnect tester.

Special tools

124 589 16 21 00
28 35

124 589 02 14 00
28

124 589 04 14 00
28

Note

The leakage of the center differential lock (ZS) and front axle drive train (AV) piston must be checked immediately after installing the pistons.

If the pressure drop is more than 3 bar within 60 s, the sealing lips on the piston tested must be replaced.

If the sealing lips on the piston of the multi-disk clutches are defective, hydraulic oil can collect in the transfer case.

This can be recognized for example by the continuous lowering of the hydraulic oil in the reservoir in the front left of the components compartment, without external leakage being evident or if oil is expelled from the breather on the adapter housing.

Inspecting, lubricating throttle linkage

3022

All engines

- Remove air cleaner.
- Lubricate pivots of control shafts, control levers, throttle linkage joints and control cables using only ATF. Refer to MBNA Factory Approved Service Products list.
- Check control shafts, control levers, guide levers, ball sockets, bowden cable, and throttle linkage for smooth operation and possible wear.

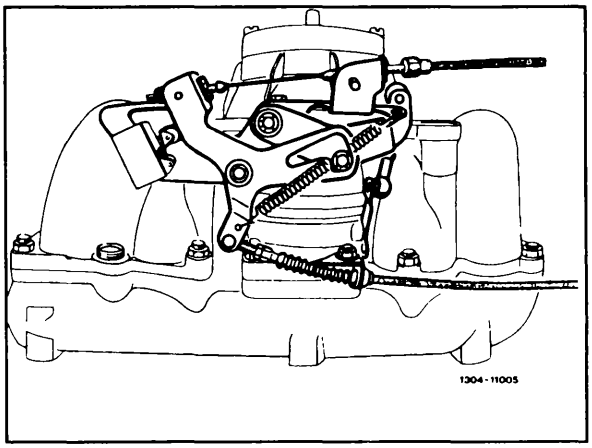

Engine 102.96/98 (except 102.983)

- During assembly jobs use corrosion protection grease, part no. 000 989 87 51 10.

Note: On model 126 with engine 603.961 as of 1986, note 2nd version control linkage.

On vehicles with electronic accelerator, the linkage should only be moved when the ignition is off to avoid setting a Diagnostic Trouble Code in the control module memory.

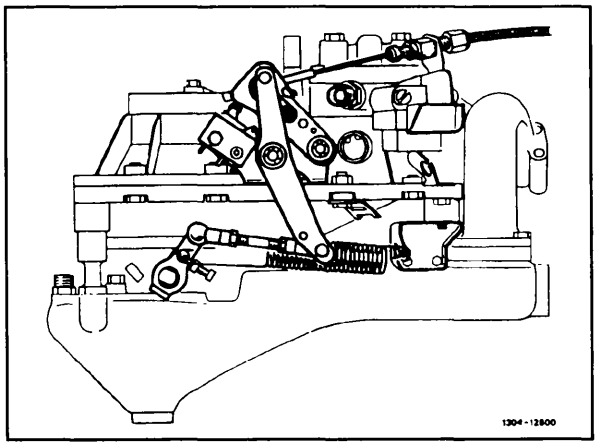

Engine 102.983

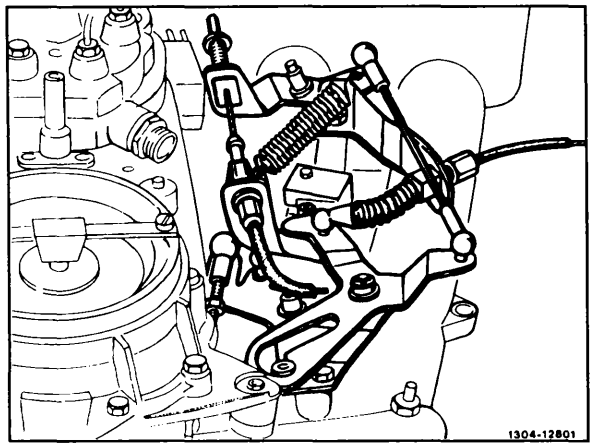

Engine 103

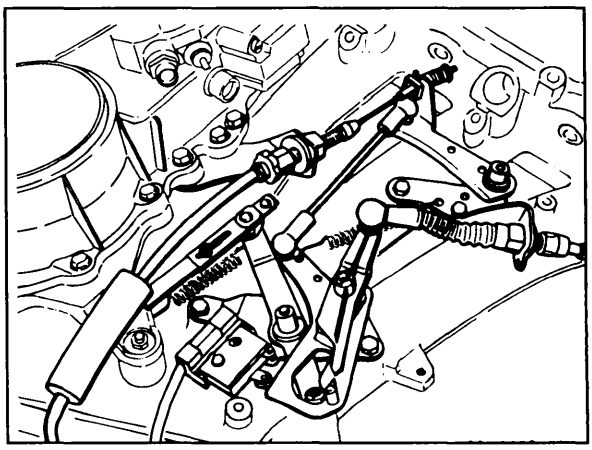

Engine 104 CFI

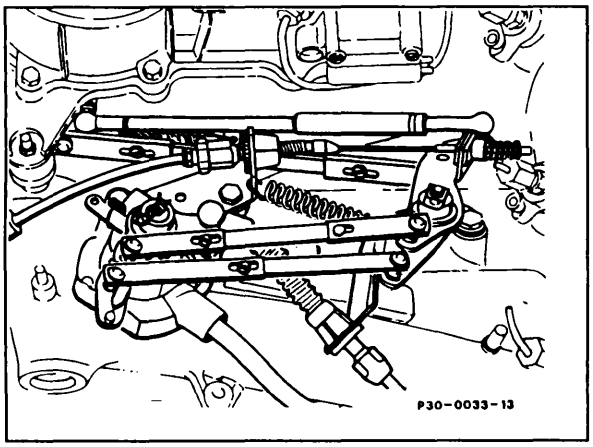

Engine 103, 104 CFI with ASRII

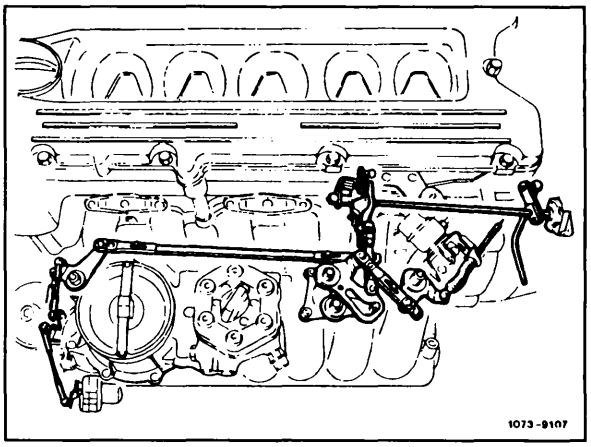

Engine 110

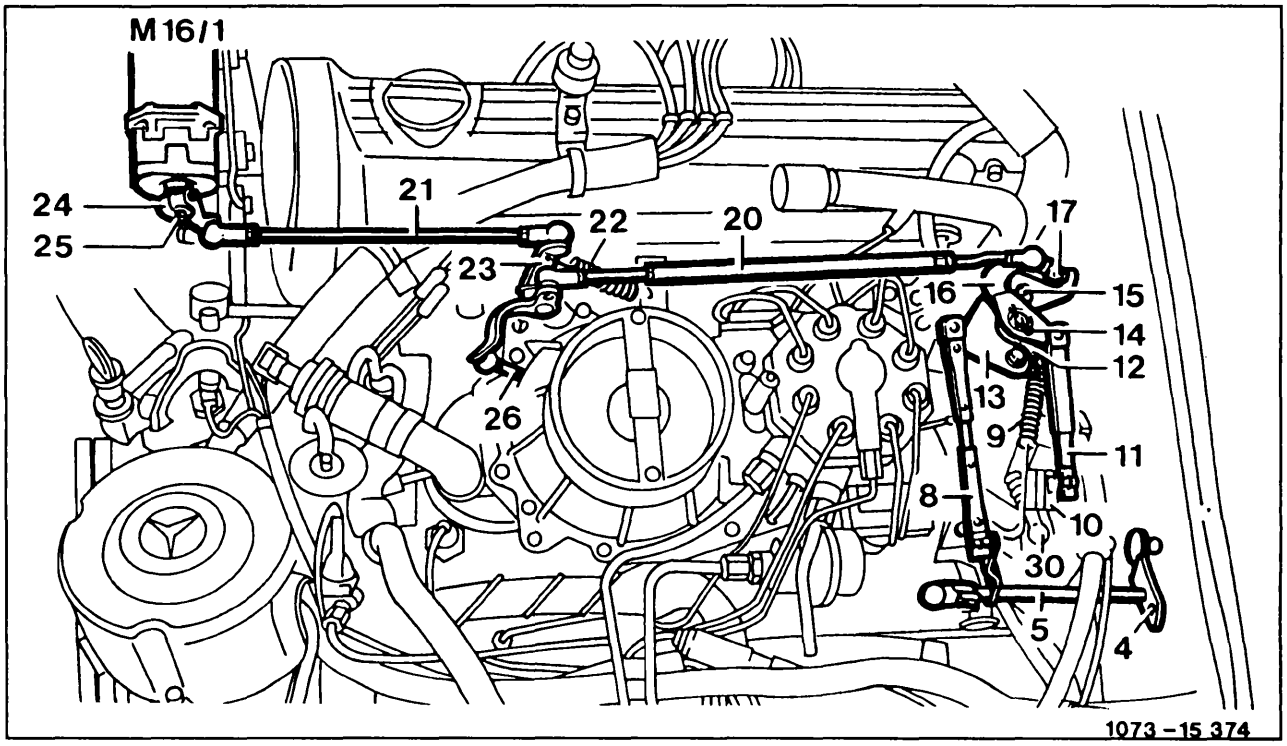

Engine 116, 117 with ASR II

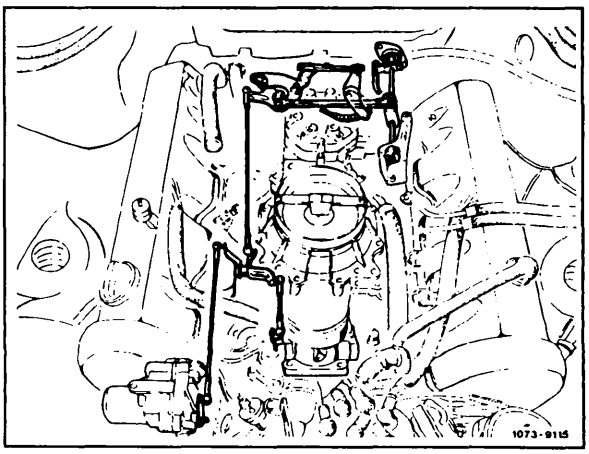

Engine 116, 117

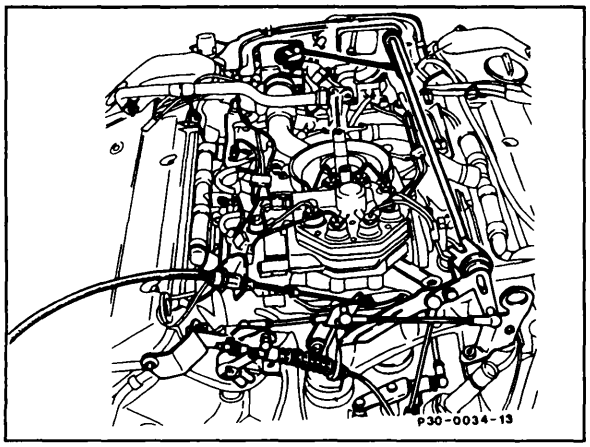

Engine 119 CFI

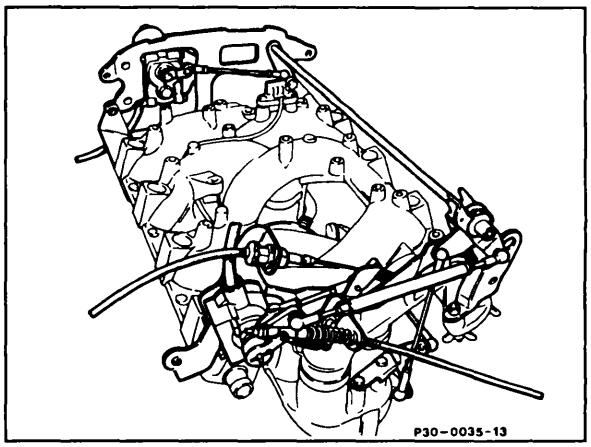

Engine 119 CFI with ASR II

Engines with LH-SFI-injection

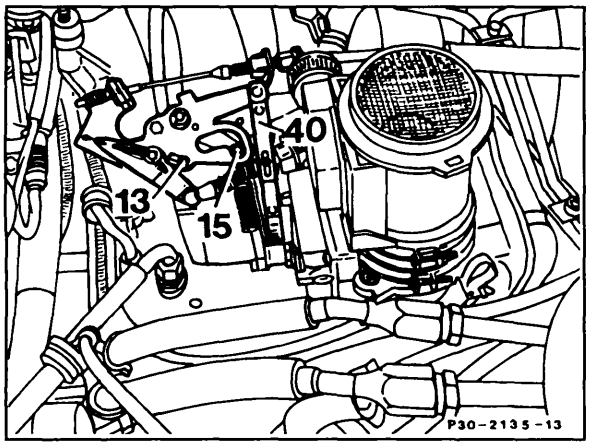

Engine 104 LH-SFI

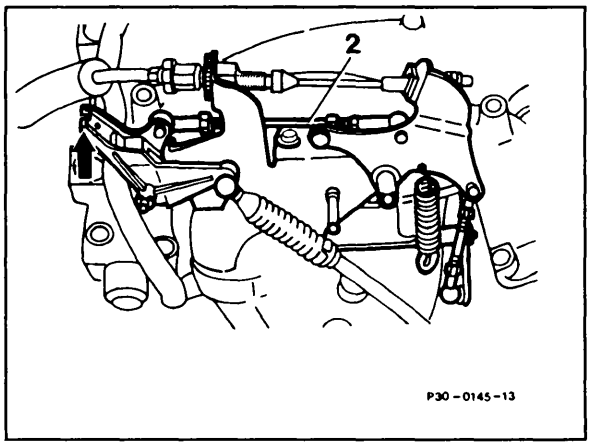

Engine 119 LH-SFI without slotted lever

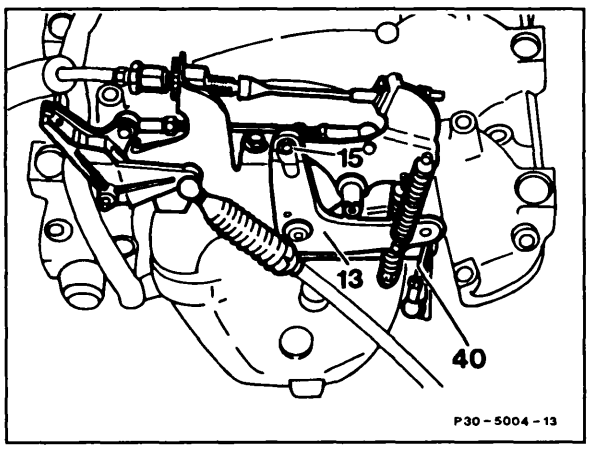

Engine 119 LH-SFI with slotted lever

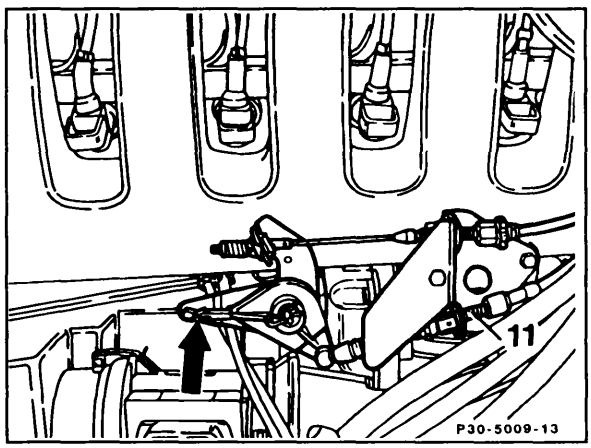

Engine 120

Engine 104 HFM-SFI

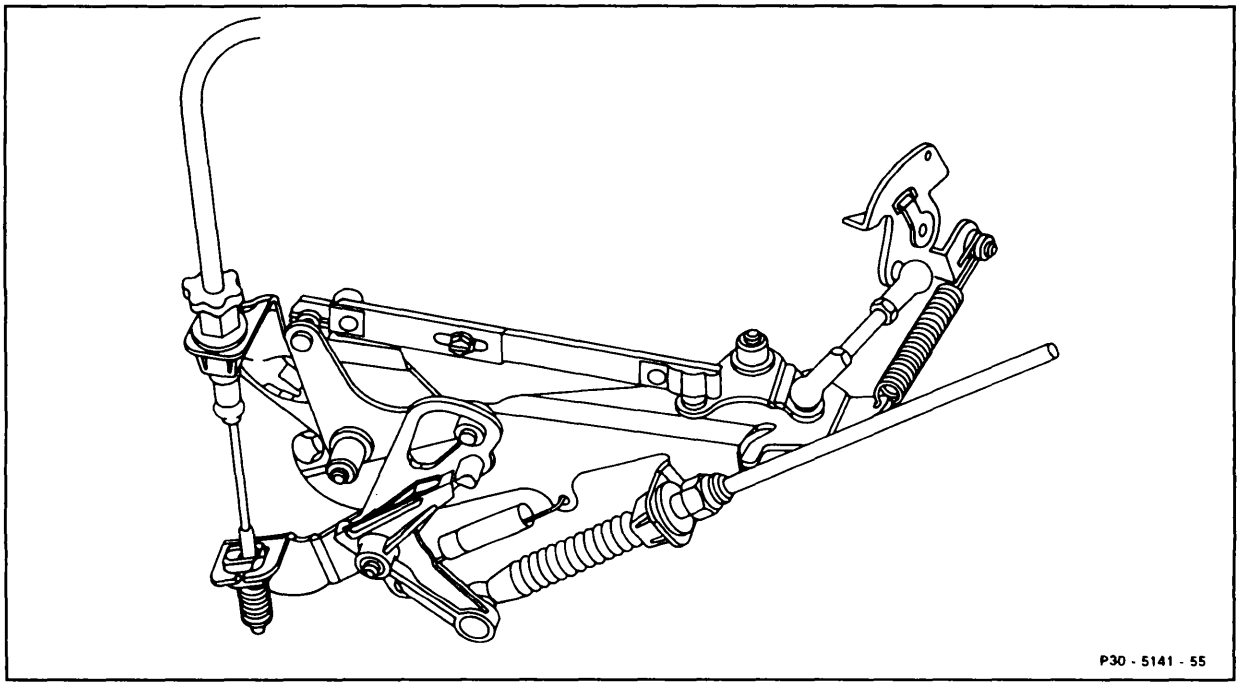

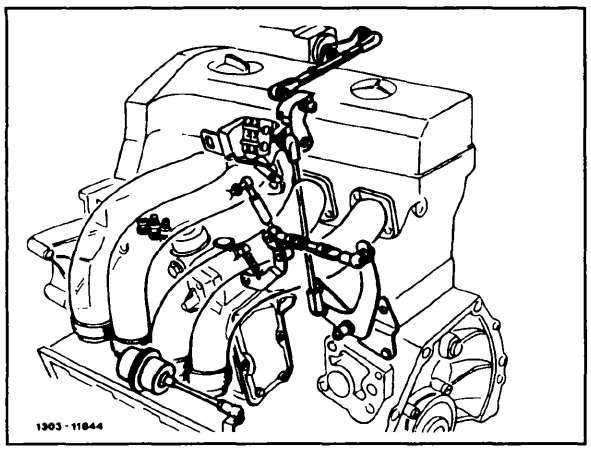

Engines 601, 602 with manual transmission

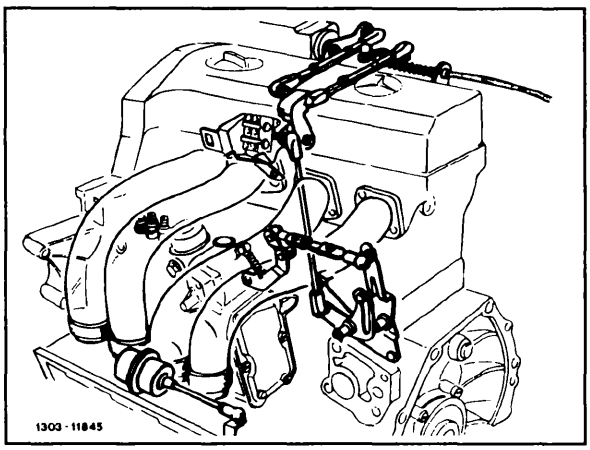

Engines 601, 602 with automatic transmission

Do not lubricate friction damper (arrow).

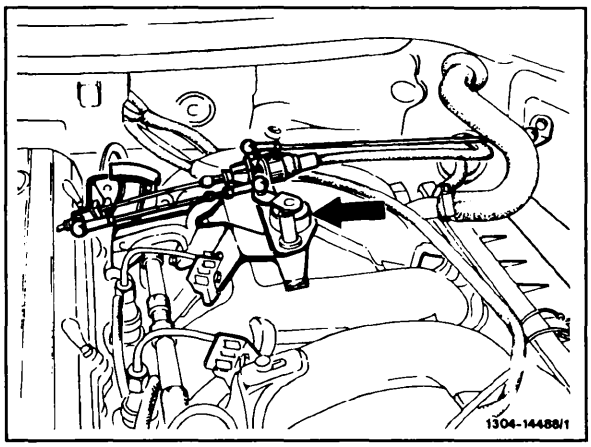

Engines 601, 602 with manual transmission , configuration with support and friction damper.

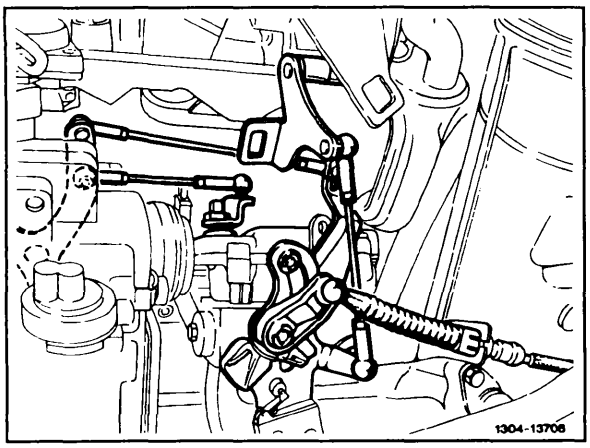

Model 124 Engine 603.960 1987

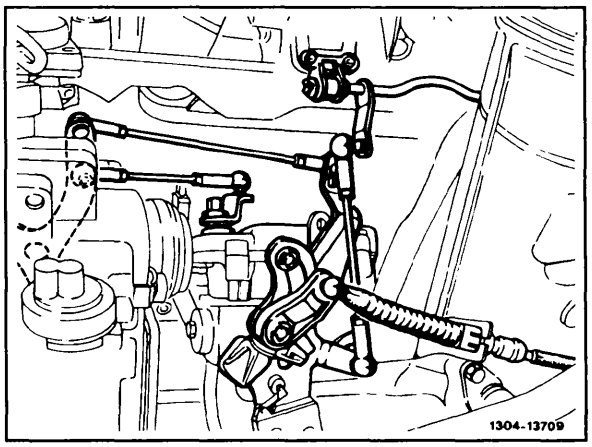

Model 126 Engine 603.961 starting 1st version

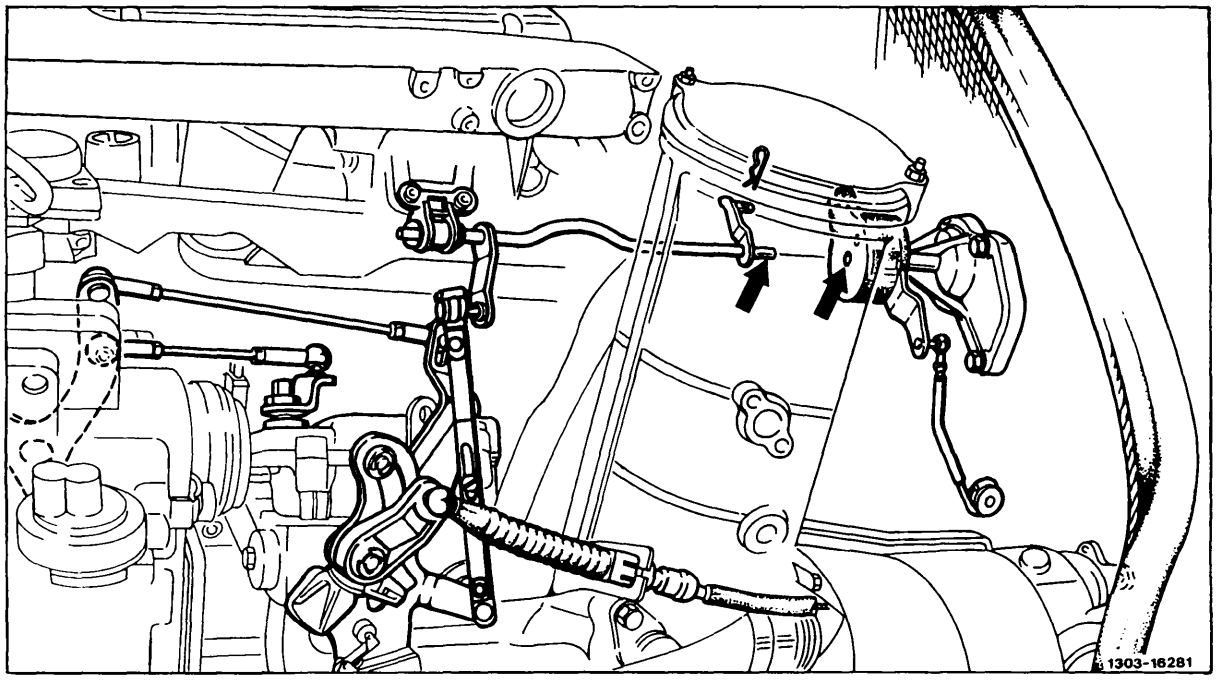

Model 126 Engine 603.961 starting 1986
2nd version, Engine 603.970

Do not lubricate bearings indicated by arrows

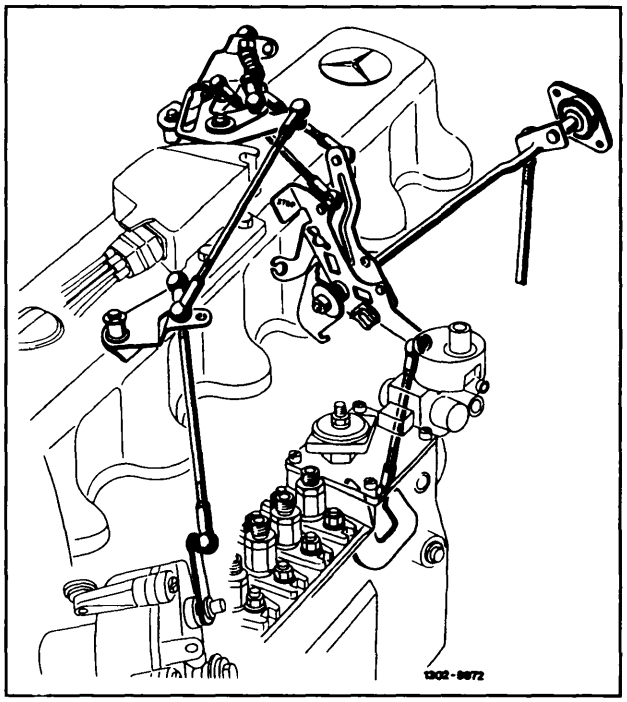

Engine 617

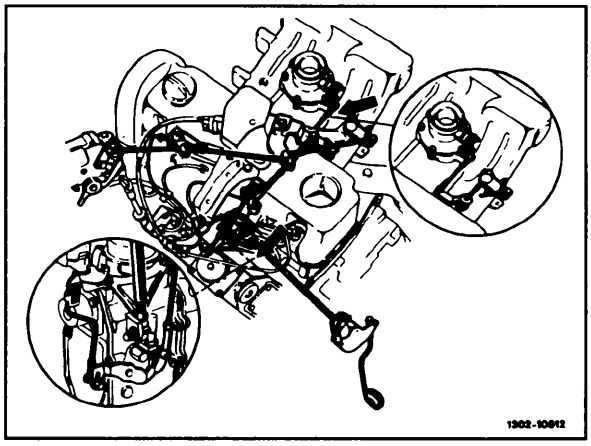

Engine 616.912 starting 1982
with manual transmission

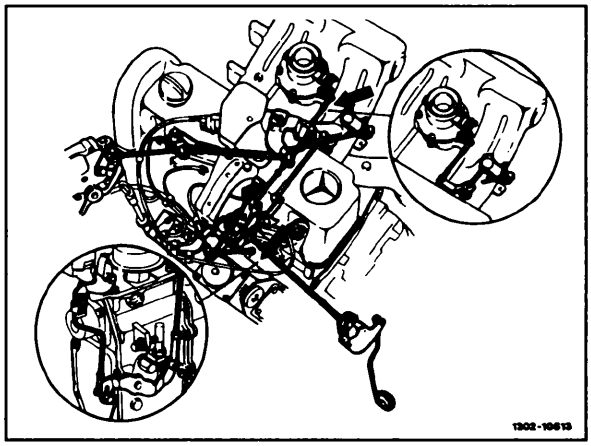

Engine 616.912 starting 1982
with automatic transmission

30–0010 Lubricating accelerator control linkage, checking ease of movement and wear (after engine wash)

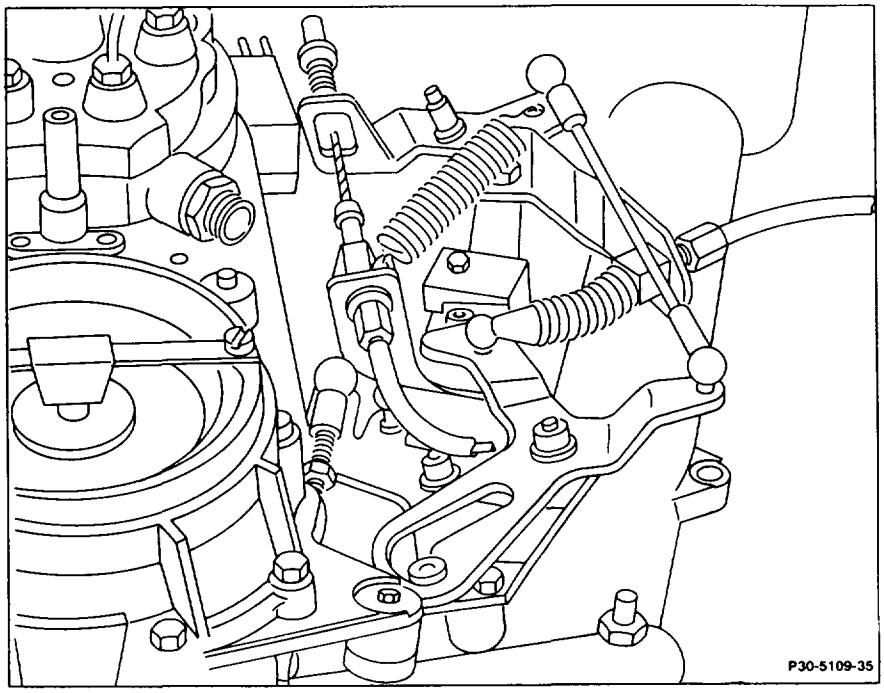

Lubricating

After each engine wash and preservation of the engine compartment, lubricate all bearing points, all accelerator control levers and joints of the accelerator control linkage with an oil can.
Following this, check ease of movement and wear.
The bowden cable is maintenance-free and does not need to be lubricated.

On vehicles in (USA) version only the following hydraulic oils may be used for this purpose:

Castrol DB Hydraulik Fluid
Mobil Aero HFA
Shell Aero Fluid 4

30–0310 Removing and installing engine longitudinal accelerator control shaft

Preceding work:
Removing and installing air cleaner (09–1051).

Operation no. of operation texts and work units or standard texts and flat rates:

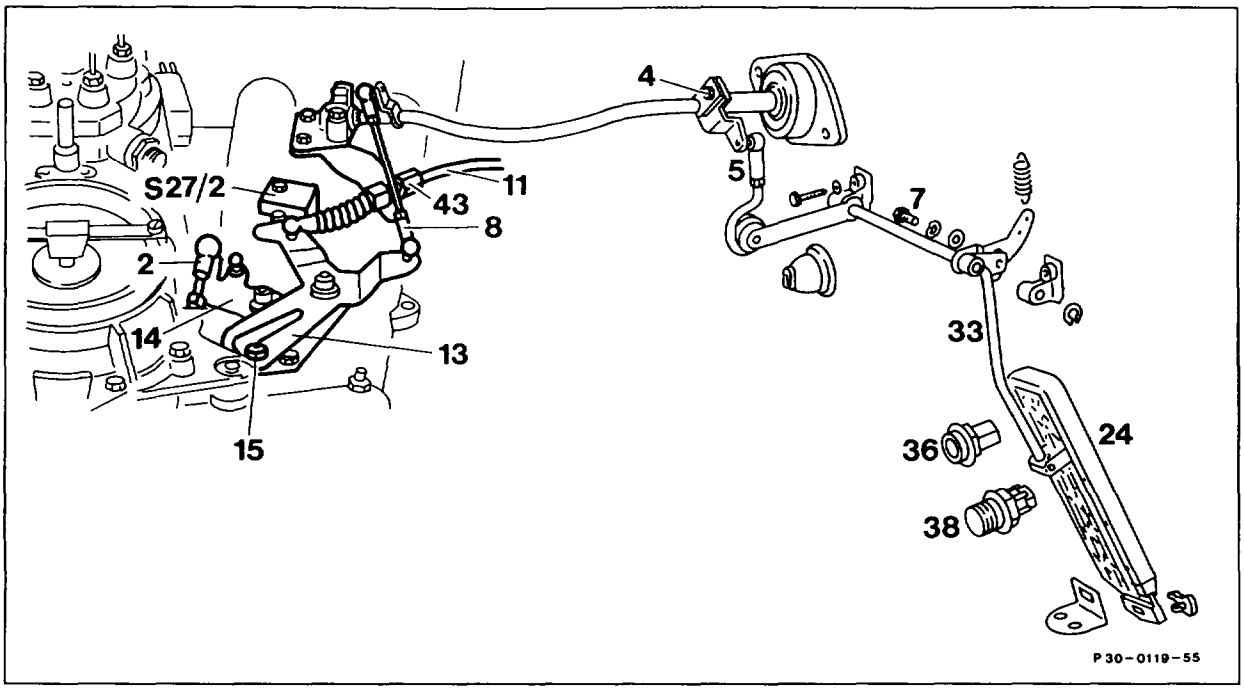

Model 107

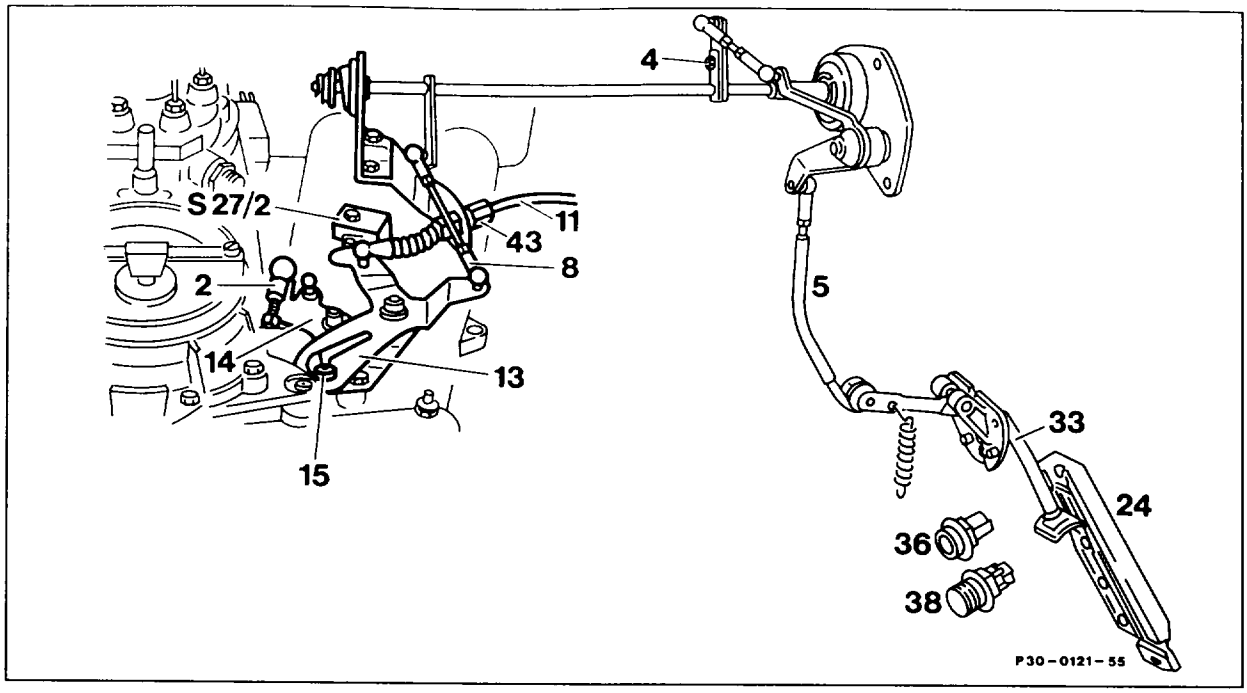

Model 126

Accelerator control rods	detach, attach.
Locking element at bearing bracket	remove, install.
	Model 126 Take off spring retainer and compression spring.
Longitudinal accelerator control shaft	push to the rear and take out. When doing this, pay attention to compression spring, plastic bushes, articulated balls and washers.
Bearing points and ball sockets	grease with Molykote-Longterm 2.
Accelerator control linkage	check, adjust (30–1010).

30–0320 Removing, installing and adjusting chassis accelerator control shaft, model 107

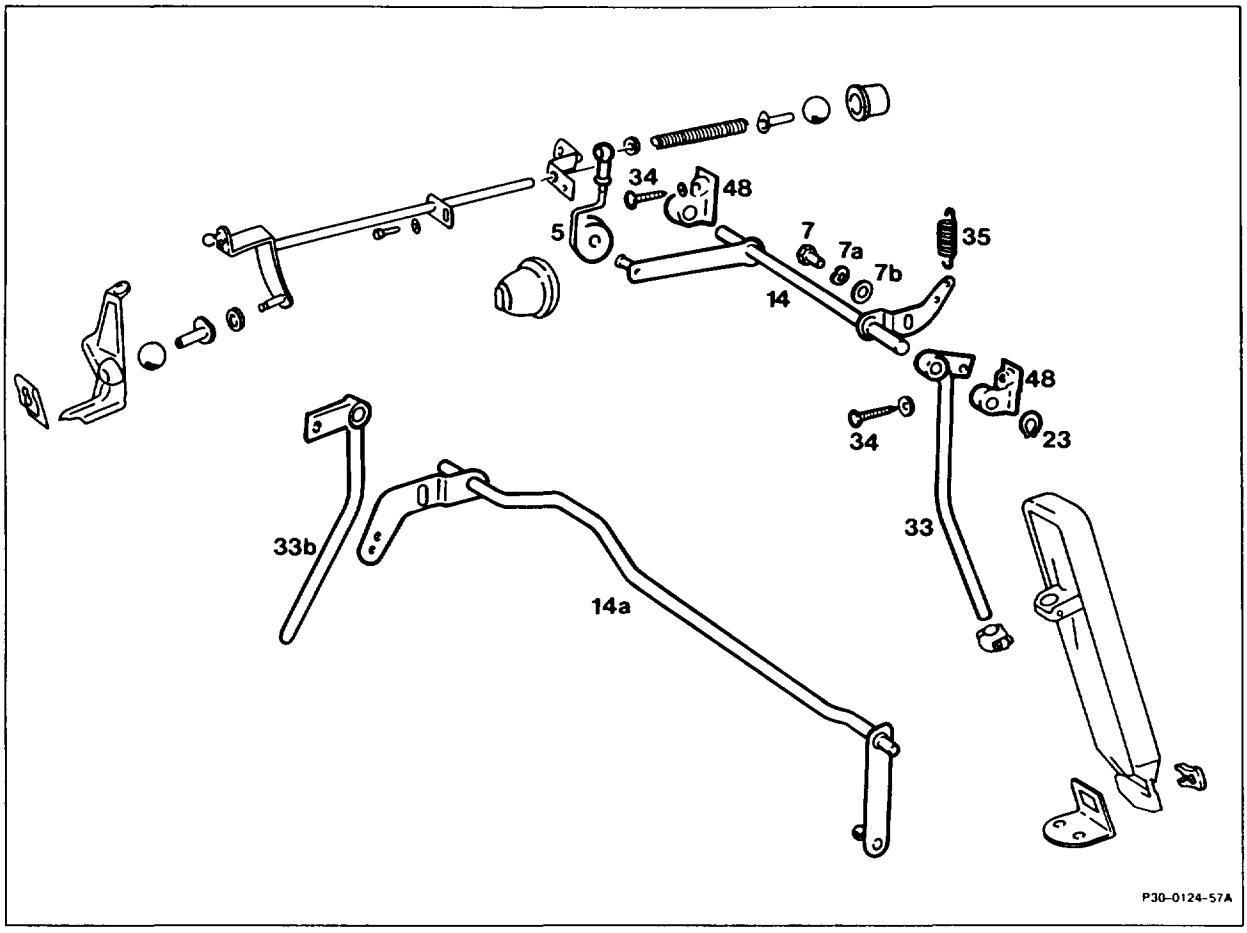

14	LHD accelerator control shaft	33	LHD accelerator pedal lever
14a	RHD accelerator control shaft	33b	RHD accelerator pedal lever

Accelerator pedal	remove, install (30–1321).
Footwell trim	remove, install.
Push rod (5) with damper ring	press off lever of accelerator control shaft, fit on. Pay attention to note.
Heater box	remove, install (83–100).
Return spring (35)	detach, attach.
Screws (34)	unscrew, screw in.
Fire wall bearing (48)	push out upward, install.

Accelerator control shaft (14, 14a)	take off with bearing, fit on.

Note
Grease the bearing points and also the ball sockets of the accelerator control with anti-corrosion grease 000 989 87 51 10.

Circlip (23)	pull off, fit on.
Bolt (7), corrugated washer (7a), washer (7b) . . .	unscrew, screw in.
Accelerator pedal lever (33, 33b)	pull off, fit on.
Accelerator control linkage	adjust (30–1010).

Note
Since 02/81 the push rod (5) is fitted with a bush (5a) to the accelerator control shaft (14, 14a).
Retrofitting is possible as follows:
- Lightly grease button pin (a) with anti-corrosion grease 000 989 87 51 10.
- Insert bush (5a) into push rod (5) and press push rod onto button pin (a). Ensure the bearing bush is correctly seated.

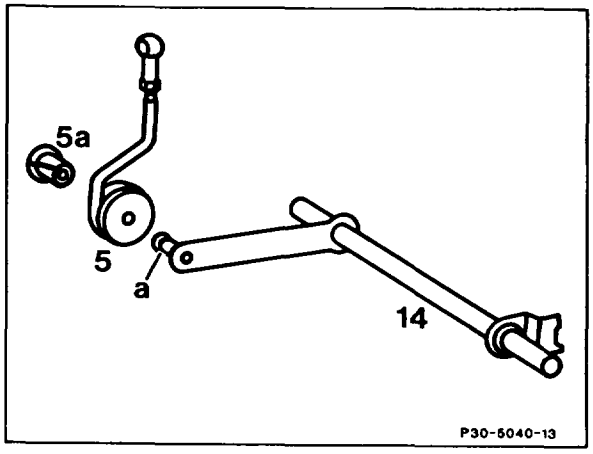

- Plug connection of position indicator and actuator are water tight. They **may only be opened** when performing the test operations **provided for** in the test program.

- Do **not** use cleaning fluids or contact spray on the plug connection of the position indicator and actuator.

- The electronic accelerator pedal control unit is **not** fuse-protected.

- Do **not** create contact between connector pins 7 and 19 of the electronic accelerator pedal control unit.

- Before setting or testing the accelerator control with the ignition switched on, depress accelerator pedal to full throttle stop (approx. 5 seconds) so that the throttle valve set value signal from the ABS/ASR control unit activates the full throttle position (only vehicles as of 08/1989).

- Ground cables from the ABS/ASR control unit and from the electronic accelerator pedal control unit are connected **directly** to the battery ground (W10).

- Pay attention to the following points when performing welding work with an electric welding torch:
  - Disconnect negative terminal of battery.
  - Connect ground terminal of welding torch **directly** to the part to be welded.

30–0360 ABS/ASR and electronic accelerator pedal initial test

Operation no. of operation texts and work units or standard texts and flat rates:

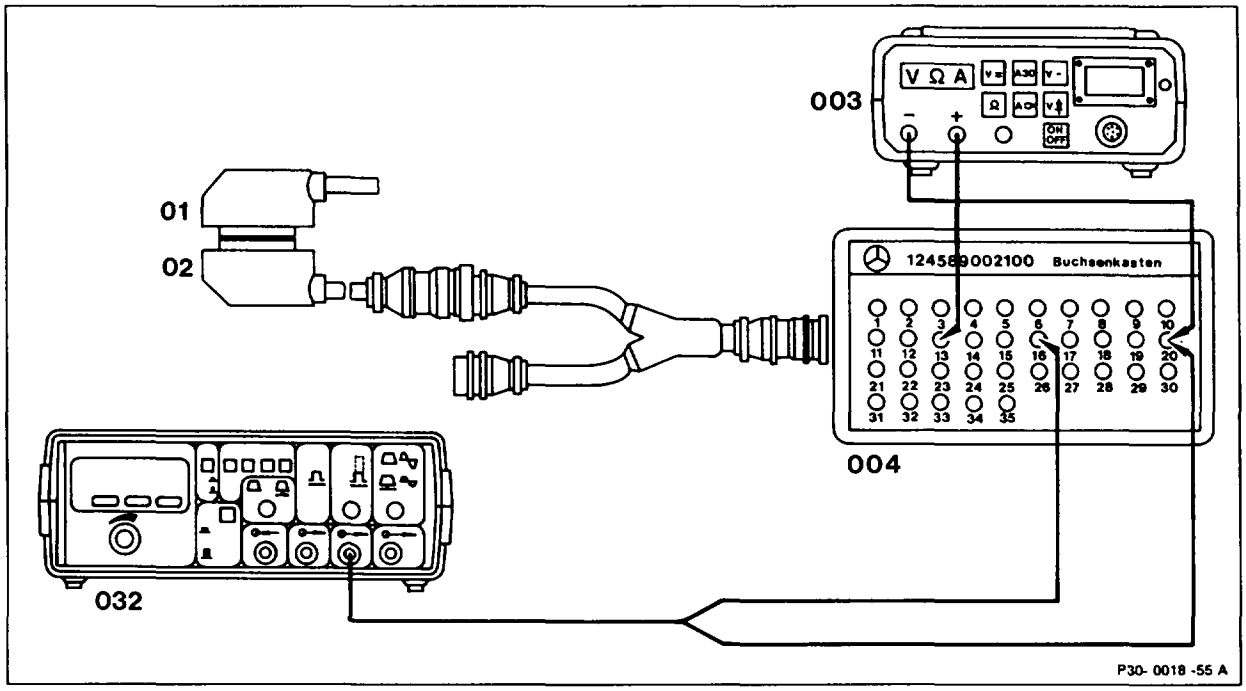

Connection diagram function generator and multimeter to contact box

01	Vehicle cable harness (ABS/ASR control unit)	003	Multimeter
02	Test cable 645 589 02 63 00	004	35-pin contact box
		032	Function generator

Special tools

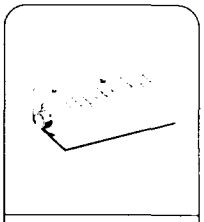

124 589 00 21 00
54

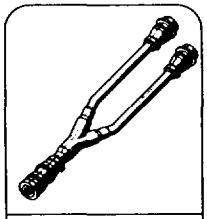

645 589 00 63 00
42 54

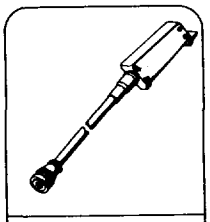

645 589 02 63 00
42 54

201 589 00 99 00
15 54

Commercially available tools and testers (see Workshop Equipment Manual)

Designation	e.g. Make, order no.
Multimeter	Sun, DMM-5
Function generator	Sun, DTR 8416

Symbols for testers

35-pin contact box

Contact

Symbols for test mode with multimeter

Function generator, square-wave signal

Multimeter, DC voltage test mode

Test step	Test scope	Test connection	Operation/ Requirement	Specification	Possible cause/Remedy
1.0	**Throttle valve signal from/to electronic accelerator pedal control unit**	N4/1 20 — 16	Disconnect ABS/ASR control unit, connect frequency generator. ⚠ red cable to contact 16. Set f = 200 Hz U = 10 V.		
		N4/1 20 — 13	Ignition: **ON** Full throttle	4–7 V and actuator must move only approx. 50% from idle speed.	Test wiring between ABS/ASR control unit (N30/1) and electronic accelerator pedal (N4/1) for open circuit/short circuit. If specification is achieved: Perform ABS/ASR test program. If specification is **not** achieved: Perform electronic accelerator pedal test program (30–1050).

Operation no. of operation texts and work units or standard texts and flat rates:
A. Vehicles without ASR 30–1010,
B. Vehicles with ASR 30–1102.

A. Vehicles without ASR

a) Model 124

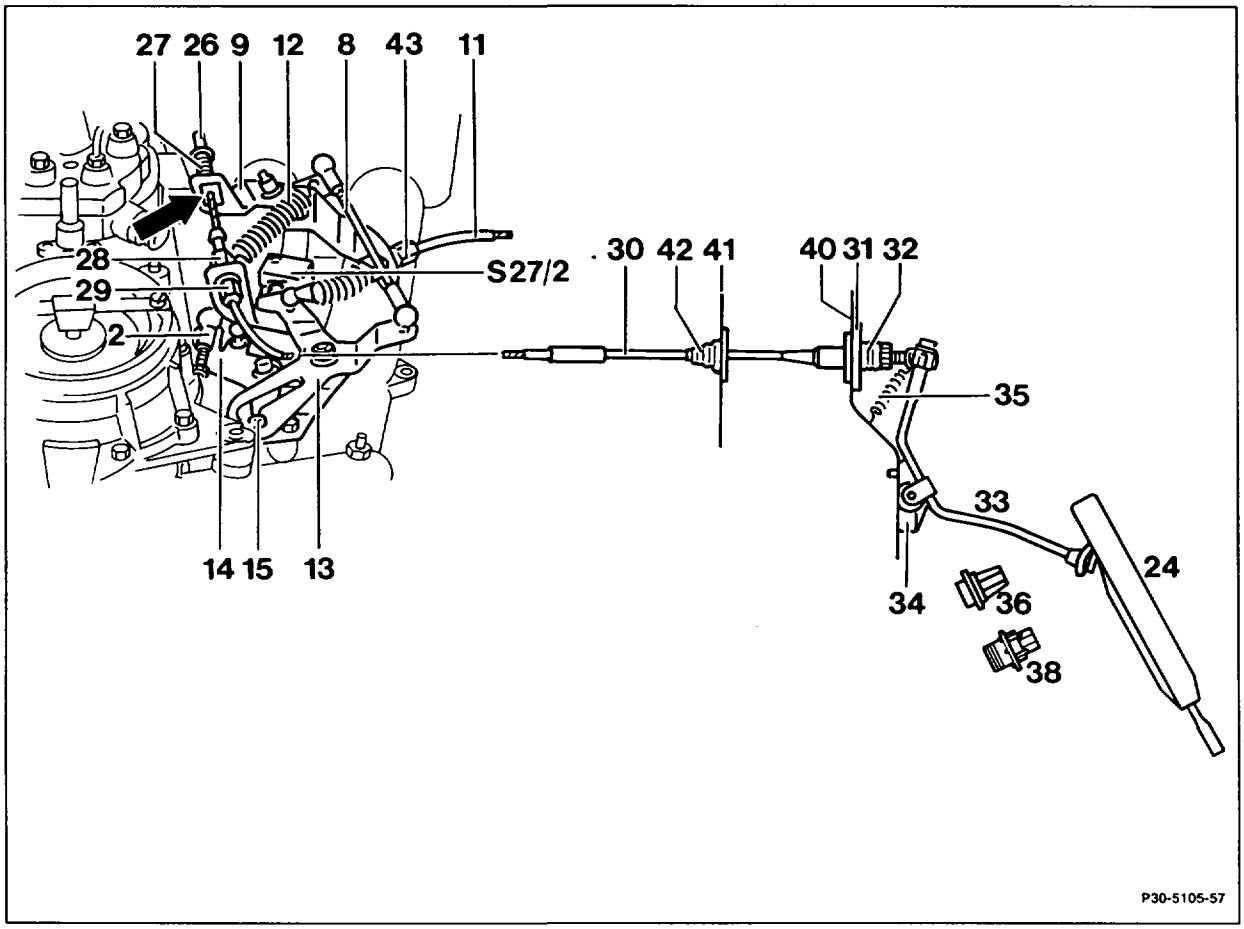

Accelerator control linkage and Bowden cable . . .	check for ease of movement and bending; replace parts if necessary.
Bowden cable (30)	slacken. Driver spring must make contact free of tension at the nipple (26). If necessary, adjust with adjusting screw (29).

Connecting rod (2)	detach. Check whether throttle valve is resting against **idle speed stop.**
Connecting rod (2)	re-attach free of tension. If necessary, adjust so that the roller (15) in the fulcrum lever (13) is resting free of tension against idle stop.
Connecting rod (8)	set to approx. 155 mm (measure from centre-to-centre ball socket); detach, attach for this step.
Bowden cable (30)	adjust. Nipple (26) must be resting free of tension on the compression spring (27). If necessary, adjust bowden cable (30) from inside vehicle with the adjusting nut (32). Grease between end piece and guide piece with anti-corrosion grease 000 989 87 51 00.
Full throttle stop	check. Detach control pressure cable (11) for automatic transmission. With engine switched off, depress accelerator to full throttle stop (36), with automatic transmission to stop on kickdown switch (38). The throttle valve lever must be resting against full throttle end stop when this is done. Perform necessary corrections with the adjusting screw (29) at the Bowden cable. Allow accelerator pedal to slowly move back into idle position. In this position the roller in the fulcrum lever must be resting free of tension against end stop and the microswitch (S27/2) must be operated. If necessary, adjust Bowden cable (30) from inside vehicle with the adjusting nut (32). If, when this check is performed the throttle valve lever does not touch full throttle end stop, adjust variable full throttle stop (36) (30–1010, section C).

Control pressure cable (11) for automatic transmission	adjust. Push back Bowden cable, then pull forward again until a stop is felt. Attach control pressure cable free of tension, if necessary adjust with adjusting screw (34).
Idle stop	once again check.

Vehicles with Tempomat cruise control

Check whether the actuator is resting against the idle stop of the cruise control. To do this, detach push rod (21) and push lever of actuator clockwise against idle stop. Whe the pushrod (21) is attached, ensure that the lever of the actuator is raised about 1 mm off the idle stop. Adjust push rod if necessary.

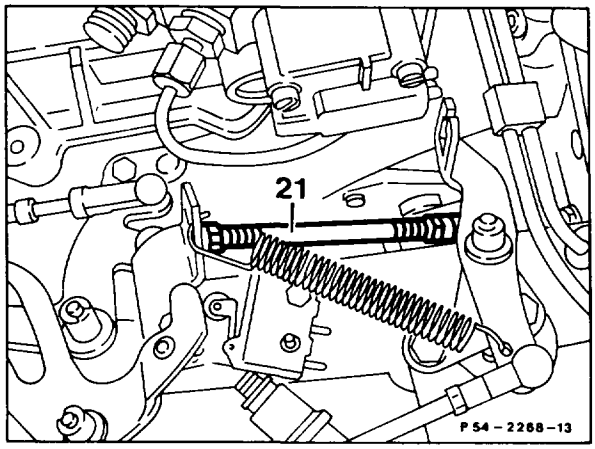

b) Models 107, 126

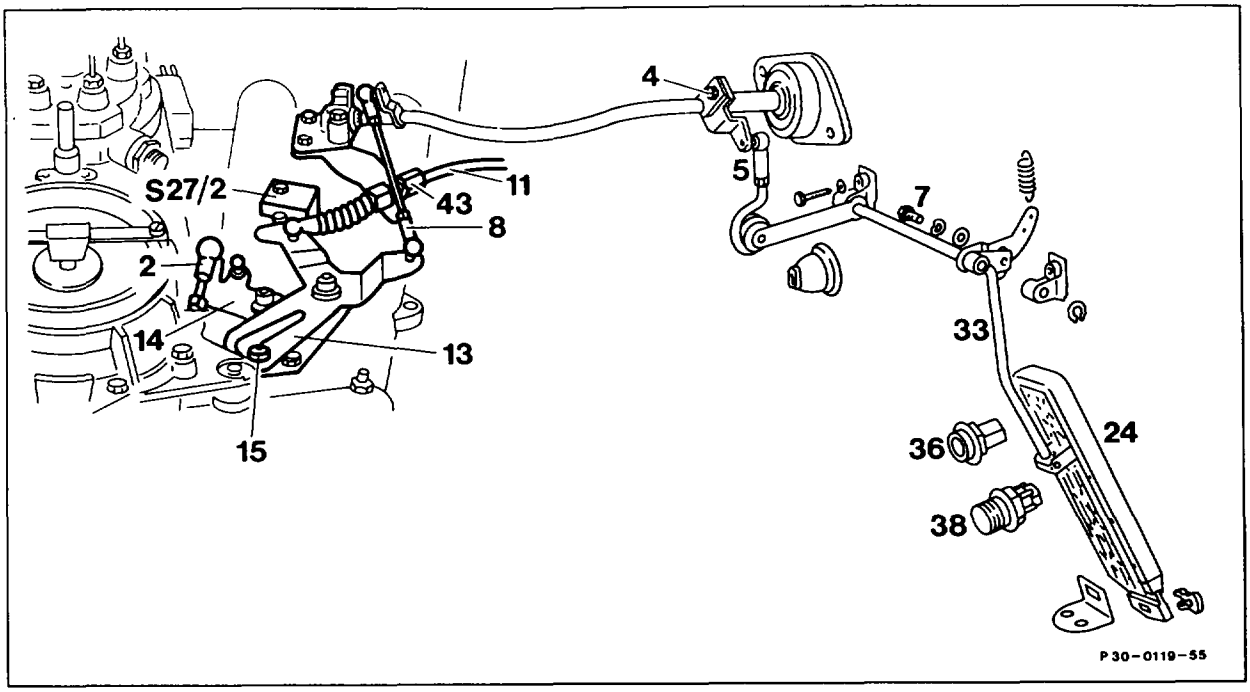

Model 107

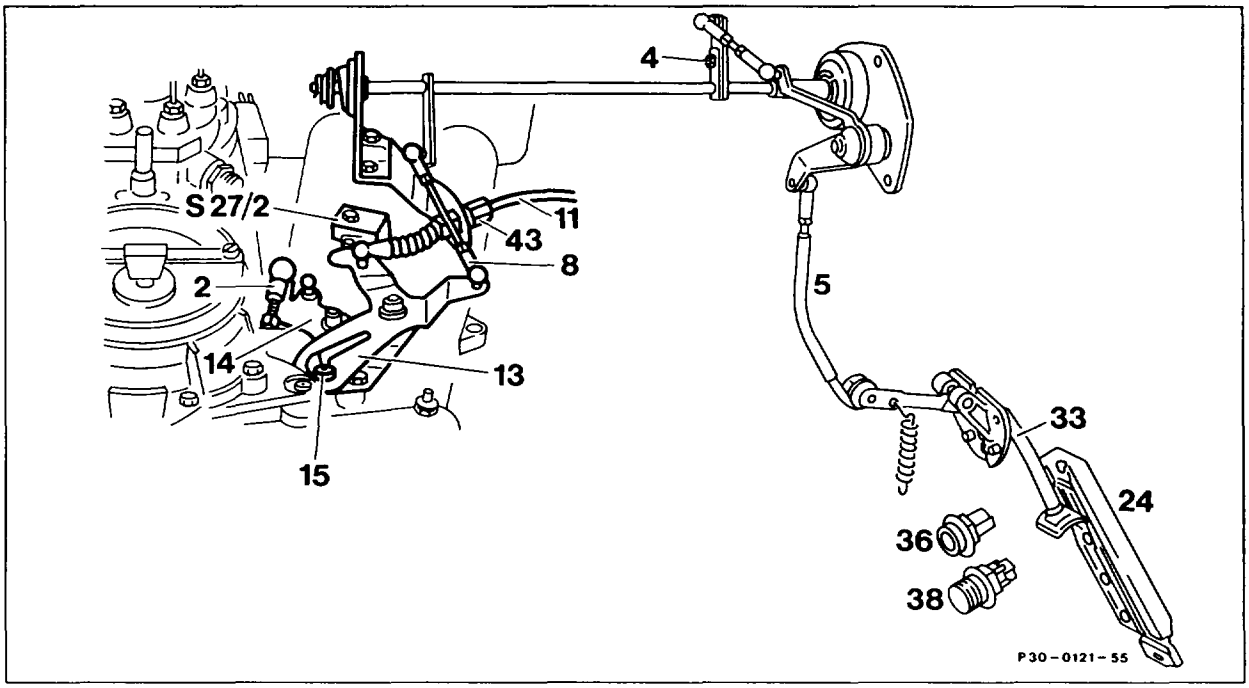

Model 126

Accelerator control linkage	check for ease of movement and bending. Replace parts if necessary.
Connecting rod (2)	detach. Check whether the throttle valve is resting against idle stop.
Connecting rod (2)	re-attach free of tension. If necessary, adjust so that the roller (15) in the fulcrum lever (13) is resting free of tension against the end stop.
Connecting rod (8)	adjust; to do this, detach, attach. Model 107 = 120 mm Model 126 = 105 mm Measured between ball socket centres.
Full throttle stop	check. Detach control pressure cable (11) for automatic transmission. With engine switched off, depress accelerator pedal to full throttle stop (36), on automatic transmission to the stop on the kickdown switch (38). The throttle valve lever must be resting against full throttle end stop when this is done. If necessary, slacken screw (4 or 7), adjust accelerator control linkage so that the throttle valve lever is resting against full throttle end stop. If the full throttle or idle speed end stop is not reached with this setting, adjust push rod (5) from the longitudinal accelerator control shaft to the accelerator pedal to the specified length, Model 107 = 105 mm Model 126 = 220 mm, measured from centre of ball socket to centre of damping rings. As a check, allow accelerator pedal to slowly move back into idle position. In this position, the roller in the fulcrum lever must be resting free of tension against end stop and the microswitch (27) must be operated. If the throttle valve lever is not resting against full throttle end stop when this check is performed, adjust variable full throttle stop (36) (30–1010, section C).

Control pressure cable (11) for automatic transmission . . . . . adjust.

Push back bowden cable, then pull forward again until a stop is felt.

Attach control pressure cable free of tension, adjust if necessary with adjusting screw (43).

Vehicles with Tempomat cruise control

Check whether the actuator is resting against the idle stop of the cruise control. To do this, detach push rod (21) and push lever of actuator clockwise against idle stop. Whe the pushrod (21) is attached, ensure that the lever of the actuator is raised about 1 mm off the idle stop. Adjust push rod if necessary.

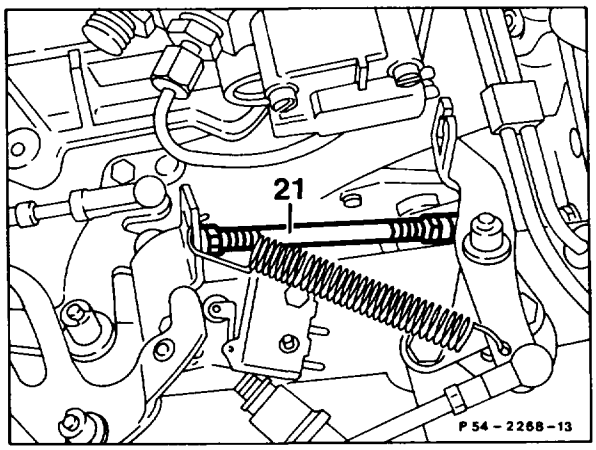

c) Model 129 Vehicles with manual/automatic transmission and with/without Tempomat cruise control

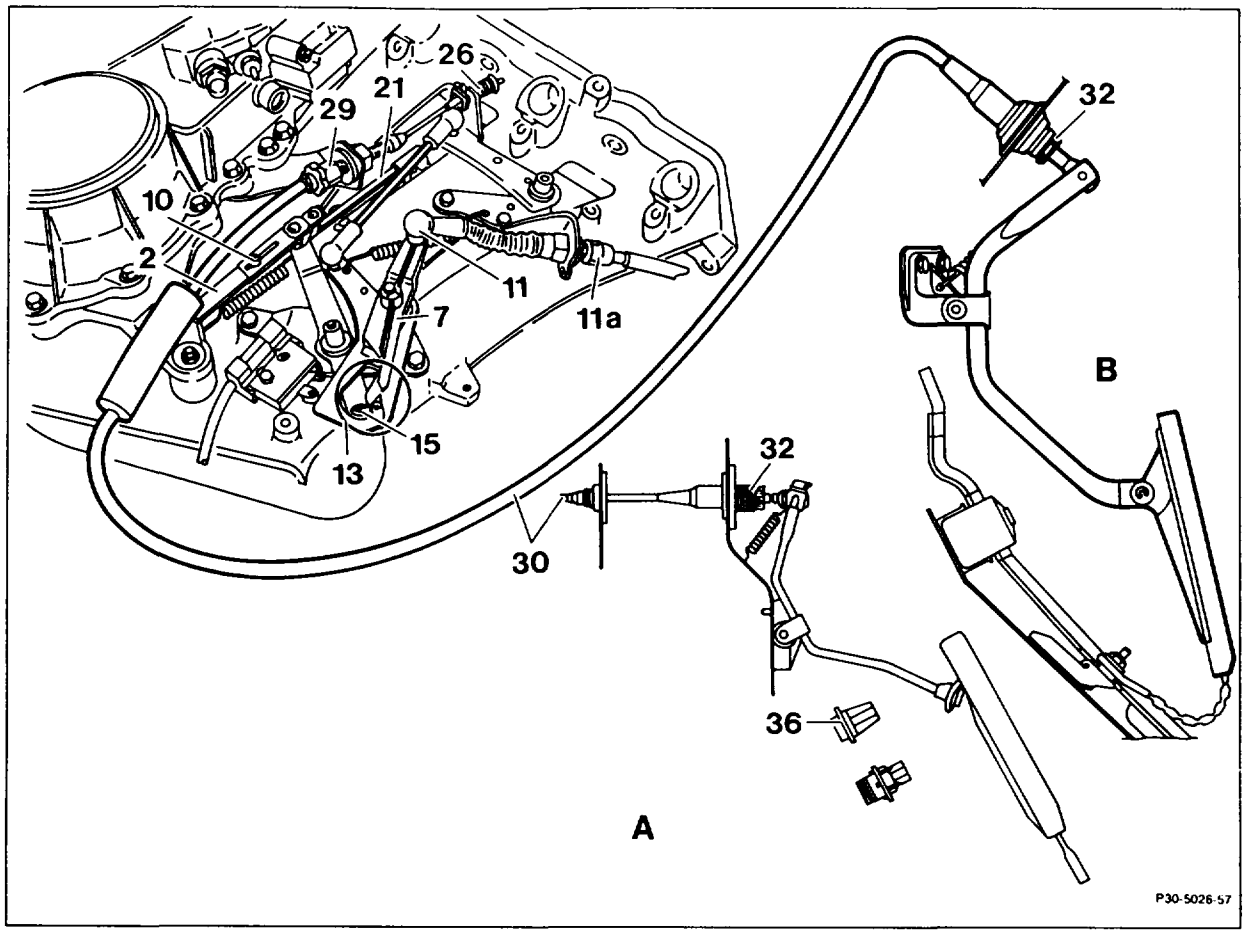

A. Model 124 B. Model 129

Accelerator control linkage and bowden cable . . .	check for ease of movement and condition. Replace parts if necessary. ⚠ If vehicle fitted with cruise control, check position of hose clip for oil-to-water heat exchanger. The accelerator control linkage must have sufficient clearance.
Bowden cable (30)	slacken. To do this, turn adjusting screw (29) until the driver spring (26) is making contact free of tension.
Connecting rod (2)	adjust. To do this, slacken clamping screw (10). Throttle valve lever must be resting against idle speed stop of the throttle valve body. Adjust connecting rod (2) so that the roller (15) in the fulcrum lever (13) is resting "free of tension" at the idle speed end stop. Tighten clamping screw (10).

Setting of cruise control . . . . . check, correct if necessary.
To do this, move throttle valve lever to idle speed stop, detach connecting rod (21) at the throttle valve lever and press actuator lever toward the engine as far as the stop in the idle speed position. Adjust connecting rod (21) so that the actuator lever has to be pulled back 1 mm off the idle speed stop in order to attach it.

Control pressure bowden cable (11) . . . . . adjust.
To do this, alter position of adjusting screw (11a) until the arrow tips (circle) are exactly opposite.

Bowden cable (30) . . . . . adjust.

a) Full throttle manual transmission
Slowly depress accelerator into full throttle position. The throttle valve lever must be resting against full throttle end stop. If necessary, release adjustable full throttle stop (36) by turning to the left and pull stop bolt out slightly. Lock adjustable full throttle stop (36) in the position it has adopted by turning to the right.

b) Full throttle automatic transmission
With engine switched off, depress accelerator pedal from inside car until it touches the stop on the kickdown switch (S30/2) (do not operate kickdown switch!).
When this is done, the throttle valve lever must be 0.5 – 1.0 mm away from the full throttle stop at the throttle valve body; adjust with adjusting screw (29) if necessary.

c) Idle speed
When the accelerator is in the idling position, the driver spring (26) must be making contact free of play; set with the adjusting nut (32) from inside the car, if necessary.

B. Vehicles with ASR

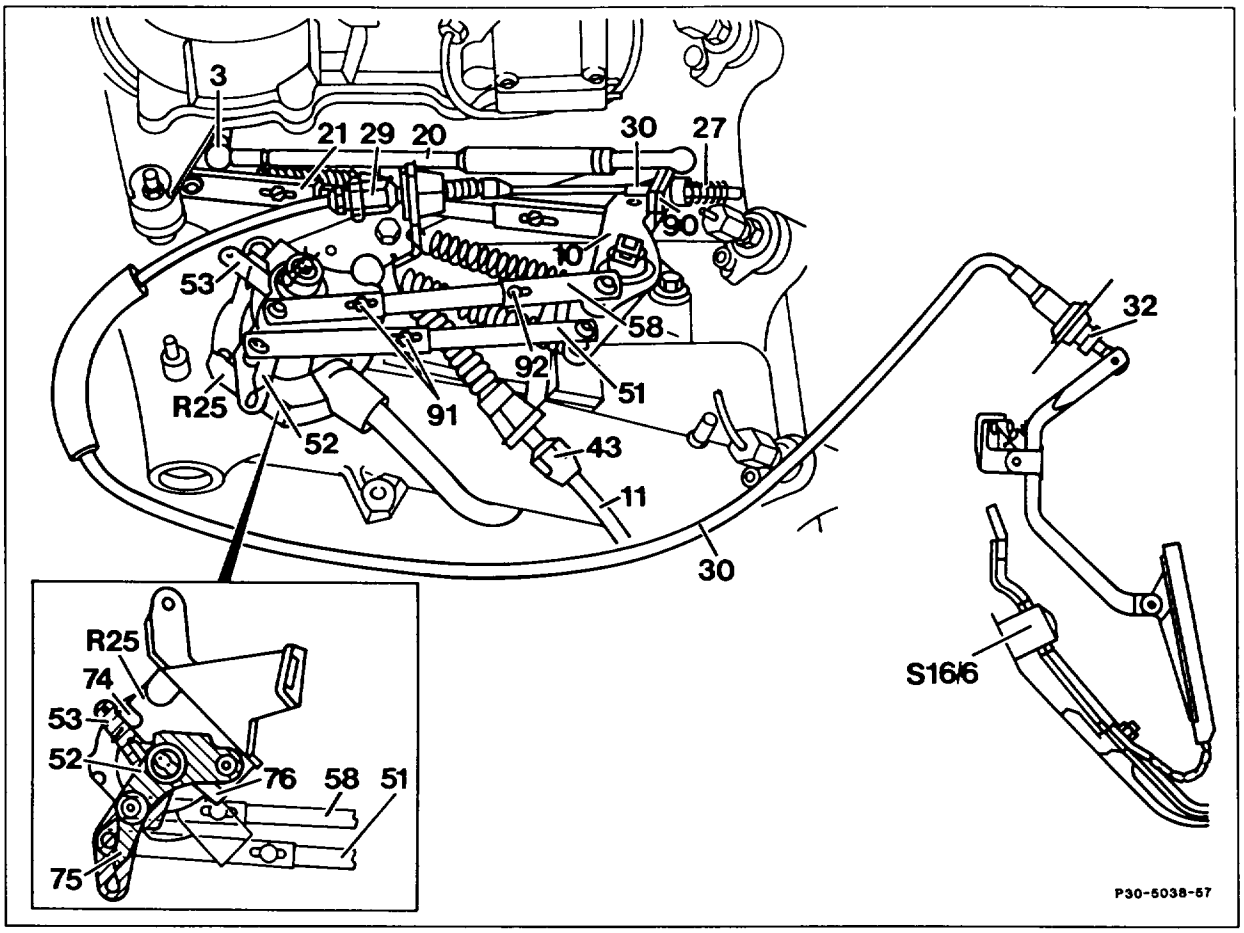

Accelerator control linkage and bowden cable . .	check for ease of movement and condition. Replace parts if necessary.
Bowden cable (30)	slacken. To do this, turn adjusting screw (29) until the compression spring (27) is making contact free of tension.
Connecting rod (21)	adjust. To do this, slacken clamping screws at connecting rod (21) and at connecting rods (51, 58). The throttle valve lever must be resting against idle end stop of the throttle valve body. **Ignition: ON.** This causes actuator lever to adopt "idle position." Now fix length of connecting rod (21) by tightening the clamping screw. **Ignition: OFF**

Connecting rod (51, 58)	adjust. To do this, move levers (52, 53) to the respective "idle stop" (74, 75) at the position sensor (R25). ⚠ The levers must not move away from the idle stops during the adjustments. Swivel lever (10) clockwise until idle travel rod (20) is pulled fully apart. Adjust connecting rod (58). To do this, move the slackened clamping screw (91) sufficiently toward position sensor (R25) until the stop pin (92) in the oblong hold is resting against the stop. Tighten clamping screw (91). Then, adjust connecting rod (51). To do this, push lever (90) lightly as far as the stop on the lever (10). Tighten clamping screw (91) in this position.
Control pressure cable (11)	adjust. Turn adjusting screw (43) sufficiently until the arrow tips (see enlarged detail) are exactly opposite.
Bowden cable (30)	adjust. **a) Full throttle** **Ignition: ON** With engine switched off, depress accelerator pedal from inside car as far as the stop on the kickdown switch (S16/6) (do not operate kickdown switch!). When this is done, the lever (53) must rest free of tension against the full throttle stop (76) of the position sensor (R25). If necessary, alter adjusting screw (29). **b) Idle speed** **Ignition: ON** With accelerator pedal in idle position, there should just be no more play at the compression spring (27). If necessary, adjust with adjusting nut (32) from inside car.

Bowden cable (30)	grease between end piece and guide piece with anti-corrosion grease 000 989 87 51 00.

Note
If driving faults occur when using the Tempomat cruise control on vehicles with ASR and cruise control, perform Tempomat cruise control test program (30–7300).

C. Adjusting variable full throttle stop

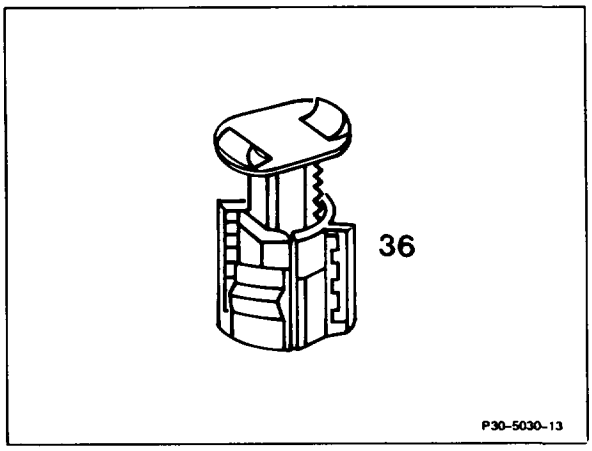

Variable full throttle stop (36)	release in footwell by turning to the left and pull stop pin out slightly.
Accelerator pedal	slowly depress to full throttle position. The throttle valve lever must rest against full throttle end stop.
Variable full throttle stop (36)	engage in the adopted position by turning to the right.

Notes

Models 107, 124, 126

A modified shape of fulcrum lever is fitted (arrow) as standardization with all engines 103.

Production breakpoint: January 1986

Model	Engine	Engine end no. manual transmission	Engine end no. automatic transmission
107.041	103.982	000260	001309
124.026	103.940	–	003470
124.030/090	103.983	–	017983
126.020	103.941	–	002120
126.024/025	103.981	–	006916

Models 107, 124, 126, 201

Tempomat cruise control connecting rod between accelerator control lever and drive lever actuator shortened by 6 mm (facilitates installation).

Production breakpoint: June 1989

Model	Engine	Engine end no. automatic transmission
107.041	103.982	011004
124.026	103.940	067516
124.030/050/090	103.983	171904
126.020	103.941	013700
126.024/025	103.981	089887
201.029	103.942	031433

Models 124, 126, 129, 201 with ASR and automatic transmission

Return spring between bearing bracket and relay lever with greater spring force.

Production breakpoint: August 1989

Model	Engine [1]	Engine end no. manual transmission
124.026	103.940	069894
124.030/050/090	103.983	180608
126.020	103.941	014104
126.024/025	103.981	095354
129.060	103.984	000219
201.029	103.942	034855

[1] Except engines 103.943/985

Models 124, 126, 129, 201 with Tempomat cruise control

As of November 1989, indefinite production breakpoint, a modified rubber seal is fitted between coding connector and Tempomat cruise control unit (recognition feature: color grey, previously black).

Models 124, 126, 129, 201 with ASR and automatic transmission (without (USA))

Connecting rod between accelerator control lever and relay lever has standardized shape for M103 and M104.

Production breakpoint: 07/90

Model	Engine [1]	Engine end no. automatic transmission
124.026	103.940	086670
124.030/050/090	103.983	218642
126.020	103.941	015720
126.024/025	103.981	122078
129.060	103.984	001421
201.029	103.942	049769

[1] except engines 103.943/985

Models 124, 126, 129, 201

Ball stud at relay lever lengthened.

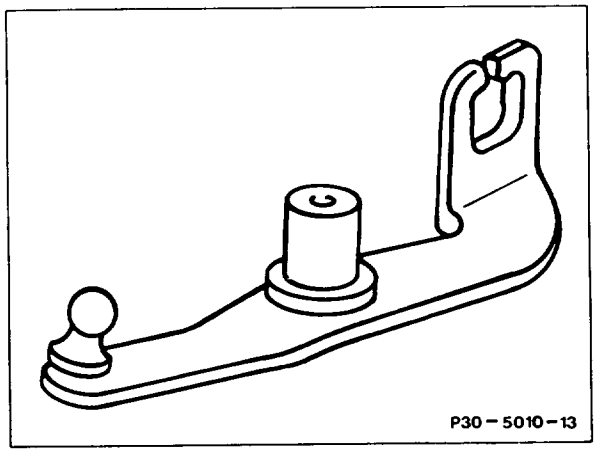

Production breakpoint: January 1991

Model	Engine	Engine end no. automatic transmission
124.026	103.940	094893
124.030/050/090	103.983	236880
126.020	103.941	016364
126.024/025	103.981	132889
129.060	103.984	002326
201.029	103.942	056221

Models 124, 201

Improvement in metering and adjustability by converting accelerator pedal lever (extending), mounting and variable full throttle stop with enlargement of pedal travel by 3° in the direction of full throttle.

33a Accelerator pedal lever model 124
33b Accelerator pedal lever model 201
36 Full throttle stop

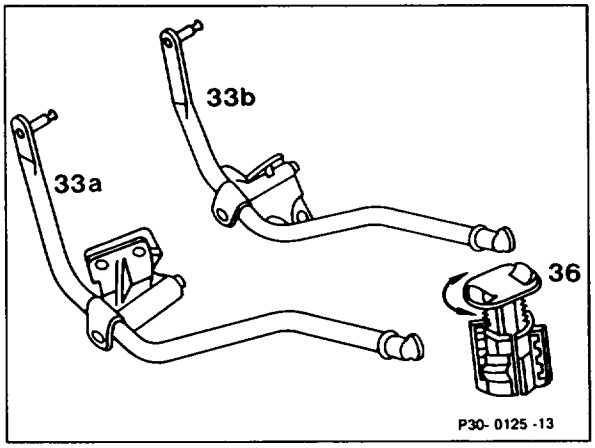

Production breakpoint: 11/88

Model	As of vehicle ident end no. A	As of vehicle ident end no. F
124.026/030/050/090 124.226/230/290	907 056	096 908
201.029	473 115	576 183

Preceding work:
ABS/ASR and electronic accelerator pedal initial test (30–0360).

Operation no. of operation texts and work units or standard texts and flat rates:

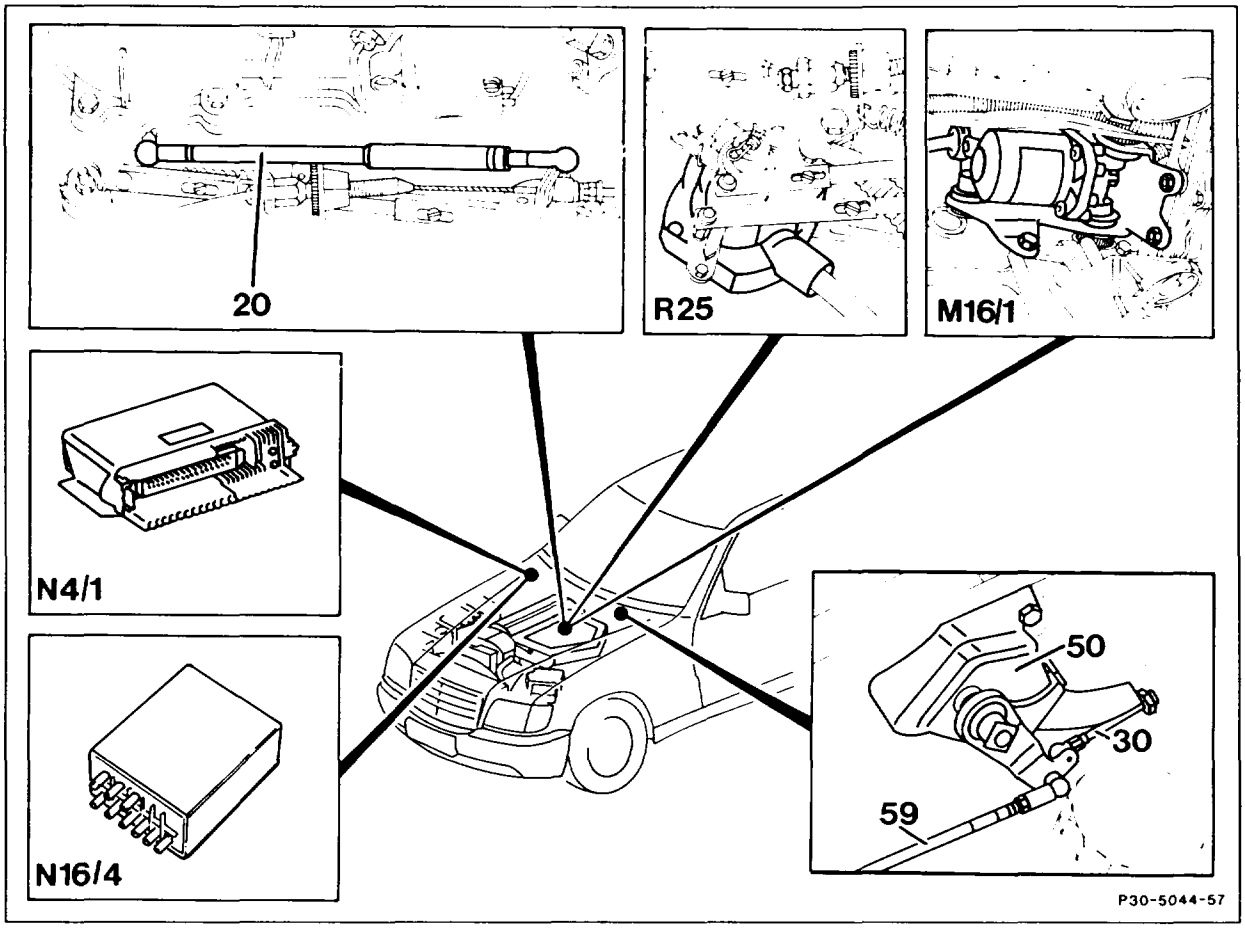

Model 124

M16/1	Electronic accelerator pedal (EFP) actuator	20	Idle travel rod (redundancy rod)
N4/1	Electronic accelerator pedal (EFP) control unit	30	Bowden cable (RHD, only models 126.024/025)
N16/4	Fuel pump relay kickdown shutoff	50	Fire wall bearing (RHD, only models 126.024/025)
R25	Electronic accelerator pedal (EFP) position sensor	59	Connecting rod (RHD, only models 126.024/025)

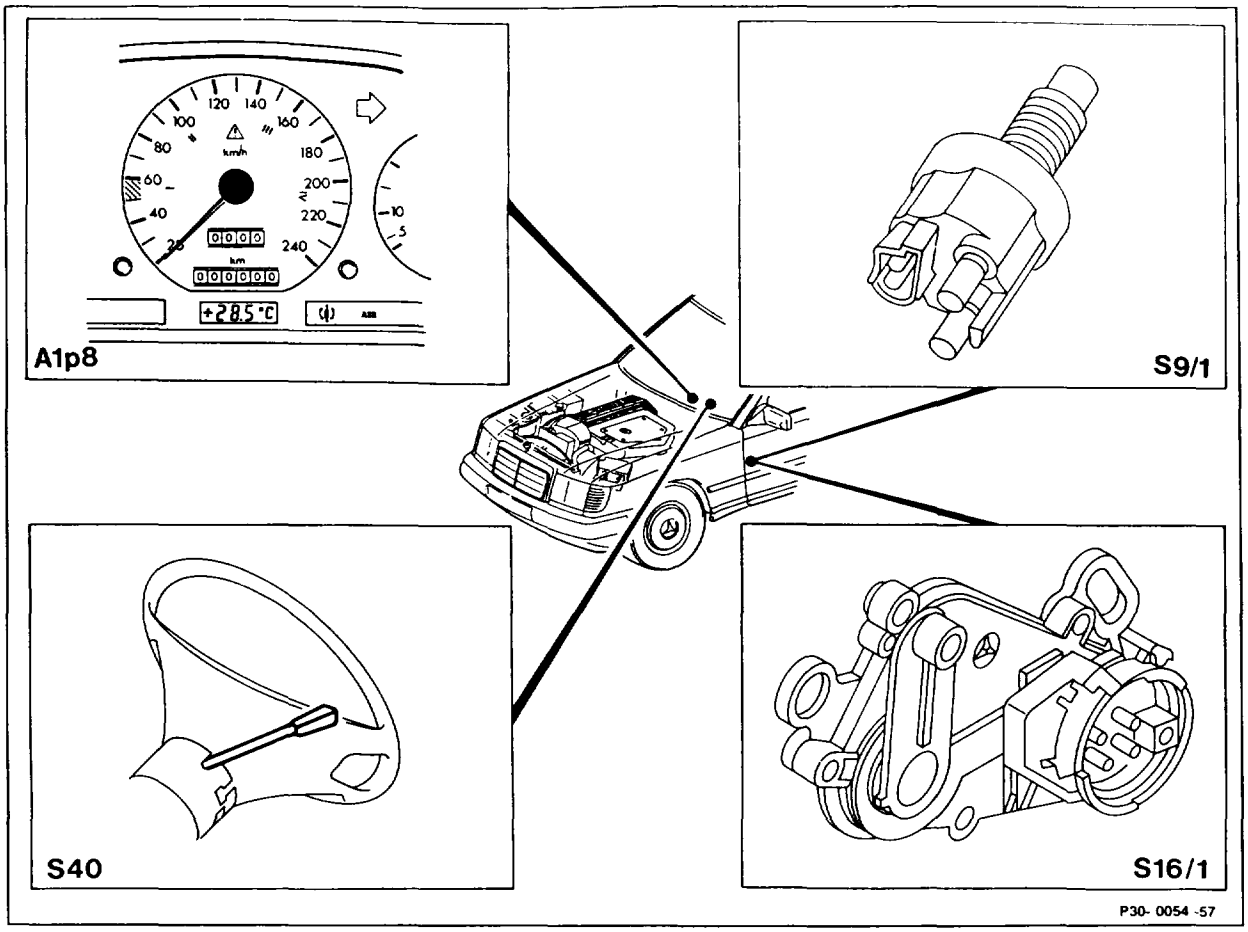

Model 124

A1p8	Electronic speedometer	S40	Tempomat cruise control switch	
S9/1	4MATIC/ASD stop light switch		V	Decelerate/set
S16/1	Starter lockout and reversing light switch		B	Accelerate/set
			SP	Memory
			A	Off

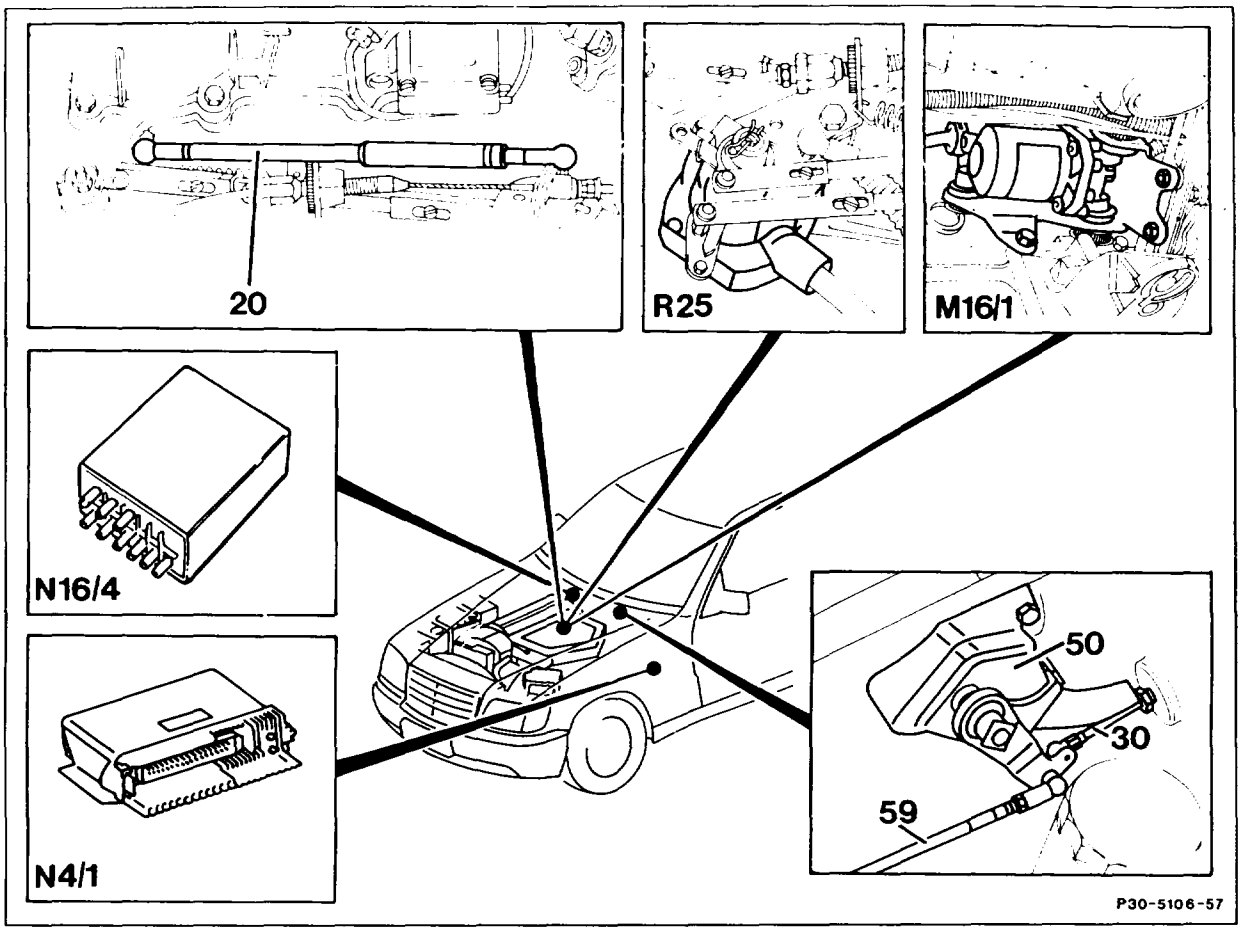

Model 126

M16/1	Electronic accelerator pedal (EFP) actuator	20	Idle travel rod (redundancy rod)
N4/1	Electronic accelerator pedal (EFP) in left footwell	30	Bowden cable (RHD, only models 126.024/025)
N16/4	Fuel pump relay kickdown shutoff	50	Fire wall bearing (RHD, only models 126.024/025)
R25	Electronic accelerator pedal (EFP) position sensor	59	Connecting rod (RHD, only models 126.024/025)

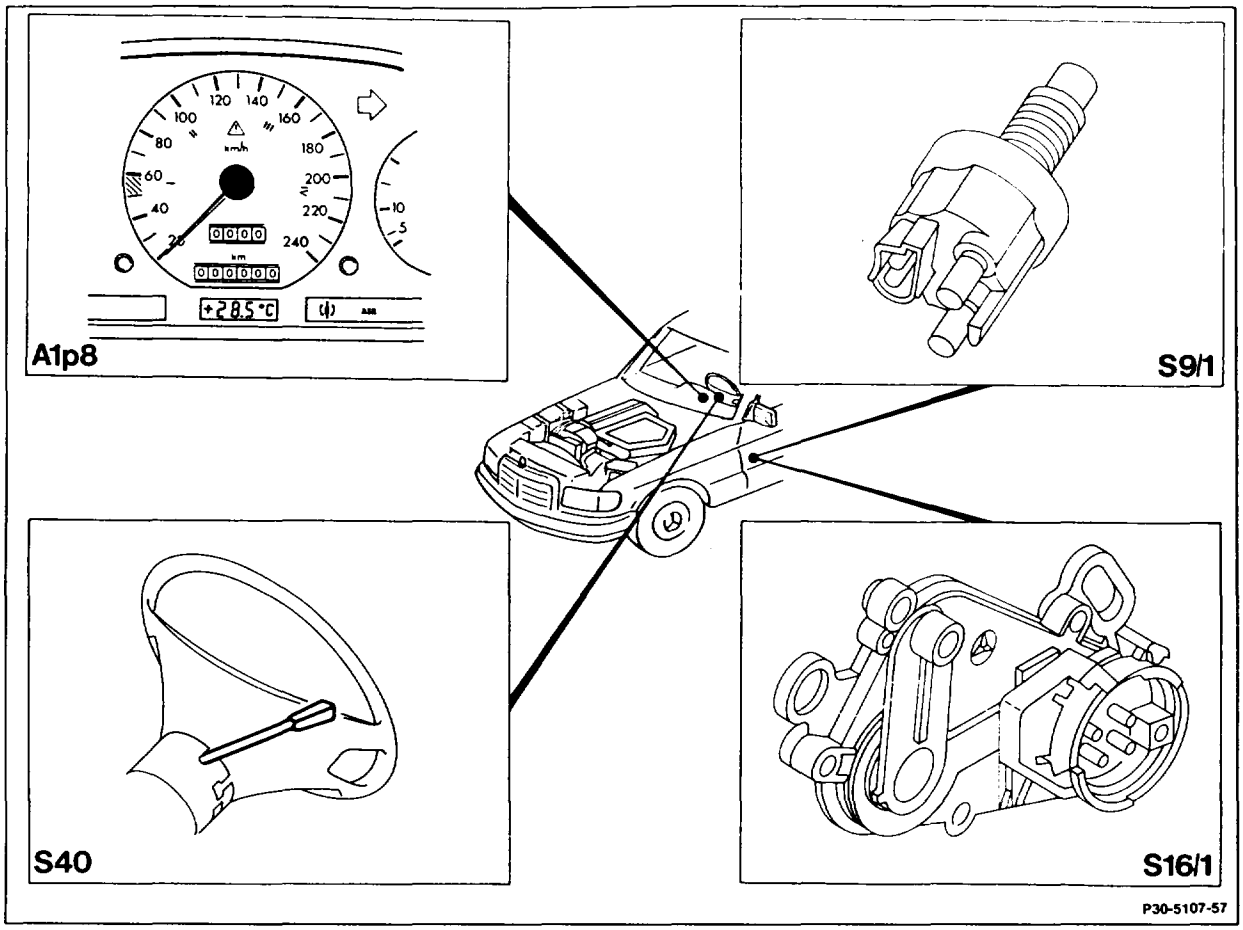

Model 126

A1p8	Electronic speedometer	S40	Tempomat cruise control switch	
S9/1	4MATIC/ASD stop light switch		V	Decelerate/set
S16/1	Starter lockout and reversing light switch		B	Accelerate/set
			SP	Memory
			A	Off

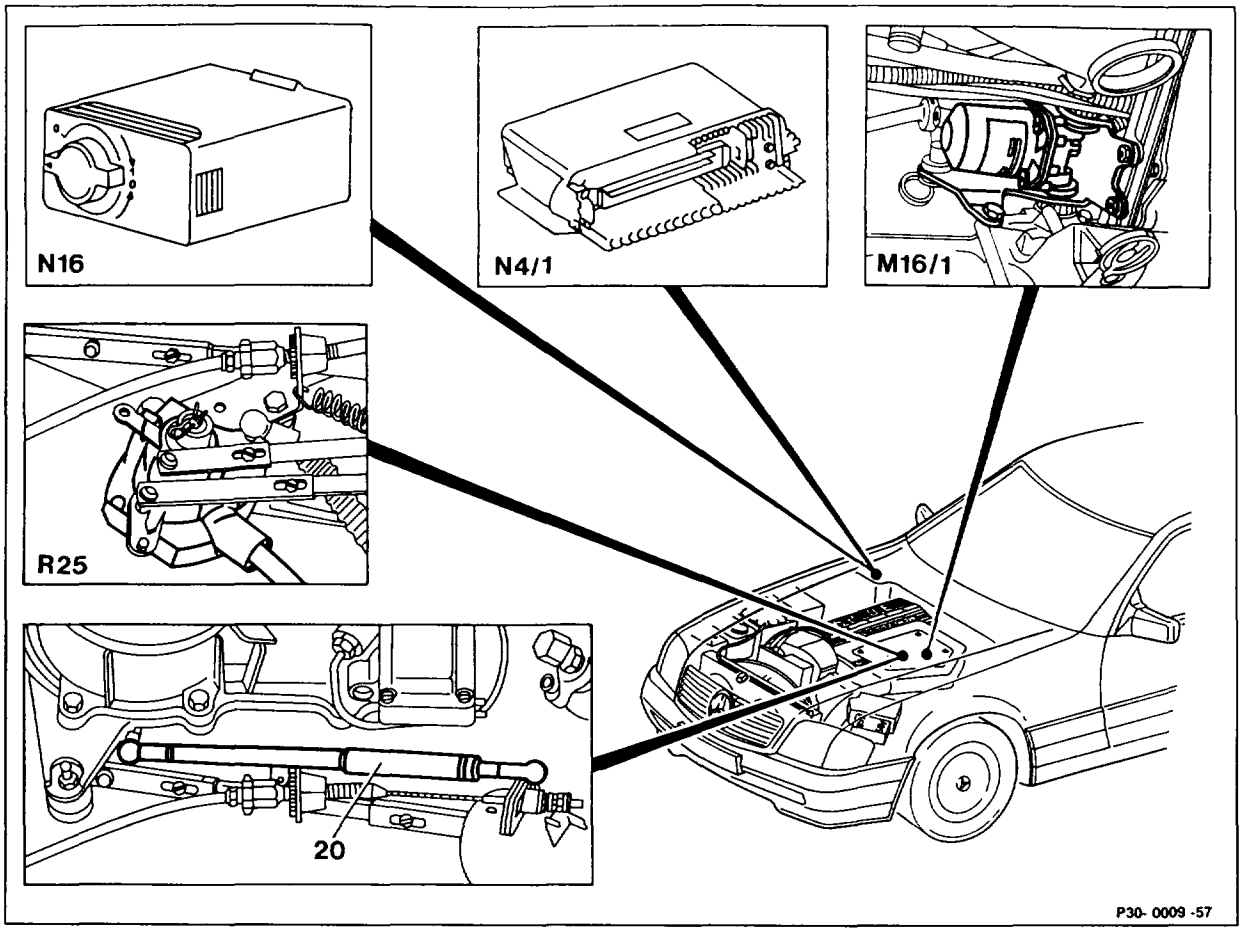

Model 129

M16/1	Electronic accelerator pedal (EFP) actuator	R25	Electronic accelerator pedal (EFP) position sensor
N4/1	Electronic accelerator pedal (EFP) control unit		
N16	Engine systems control unit MAS	20	Idle travel rod (redundancy rod)

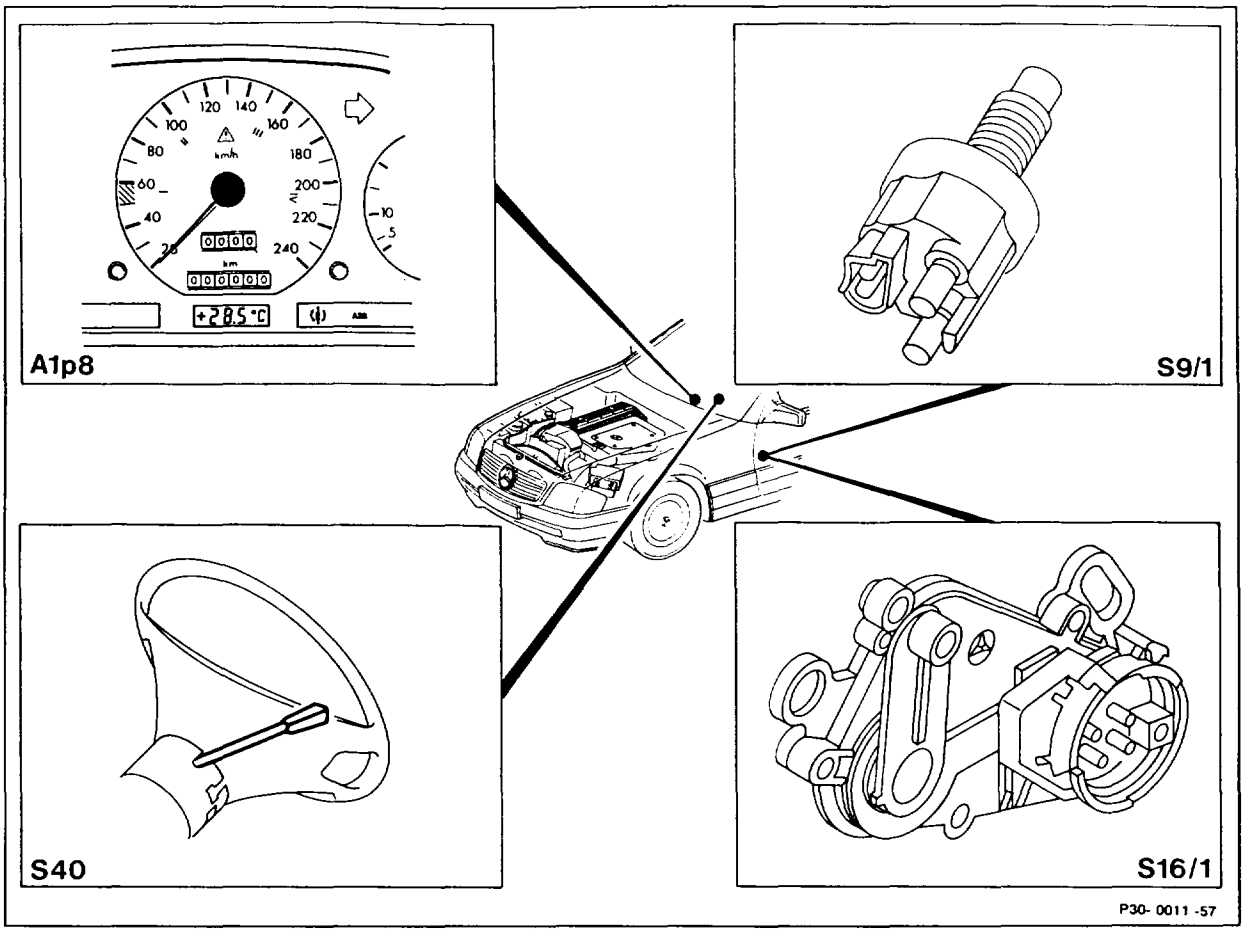

Model 129

A1p8	Electronic speedometer
S9/1	ASD/ASR stop light switch
S16/1	Starter lockout and reversing light switch

S40	Tempomat cruise control switch
V	Decelerate/set
B	Accelerate/set
SP	Memory
A	Off

Contact assignment at electronic accelerator pedal control unit

1 Voltage supply terminal 15 unfused
2 Voltage supply terminal 15 unfused
3 Electronic accelerator pedal actuator (engine)
4 Electronic accelerator pedal actuator (engine)
5 Position sensor potentiometer (ground)
6 Actuator, electonic accelerator pedal potentiometer (ground)
7 Do not create contact!
8 Idle switching signal to KE control unit (N3)
9 Position sensor potentiometer voltage supply (+)
10 Not assigned
11 Battery ground (W10)
12 Electronic speedometer, road speed signal
13 Safety switch position sensor
14 Stop light switch
15 Position sensor potentiometer (wiper signal)
16 Tempomat cruise control switch (decelerate/set)
17 Not assigned
18 Tempomat cruise control switch (memory)
19 Do not create contact!
20 Electronic accelerator pedal actuator (engine)
21 Electronic accelerator pedal actuator (engine)
22 Battery ground (W10)
23 Battery ground (W10)
24 Not assigned
25 Not assigned
26 Actuator, electronic accelerator pedal potentiometer (voltage supply)
27 Not assigned
28 Actuator, electronic accelerator pedal potentiometer (wiper signal)
29 Electronic accelerator pedal actuator (safety switch)
30 Fuel pump relay terminal 15, contact 9 or engine systems control unit terminal 15u, contact 10
31 To ABS/ASR control unit (throttle valve actual value)
32 Tempomat cruise control switch (accelerate/set)
33 Starter lockout and reversing light switch, Drive mode "R"
34 From ABS/ASR control unit (throttle valve set value)
35 Tempomat cruise control switch (OFF)

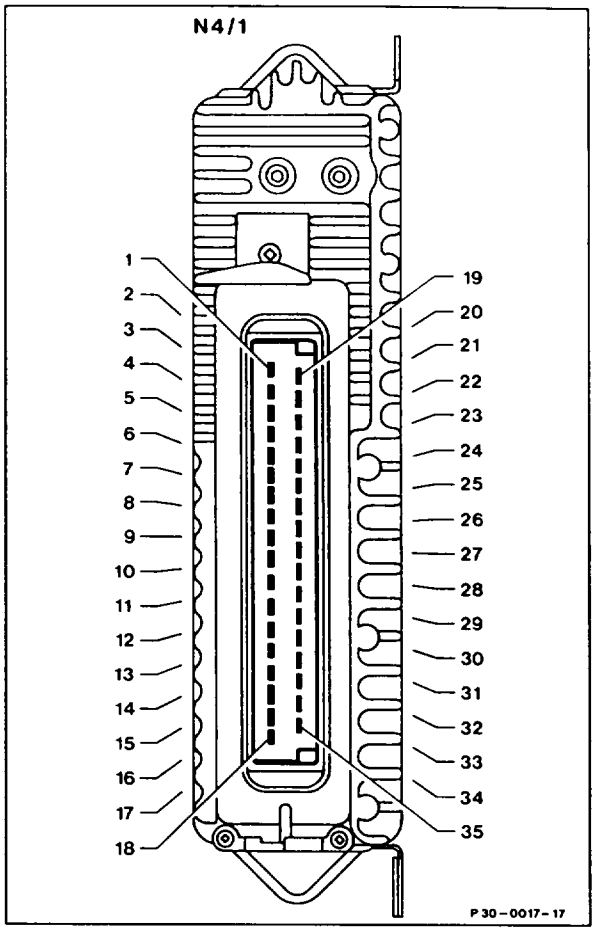

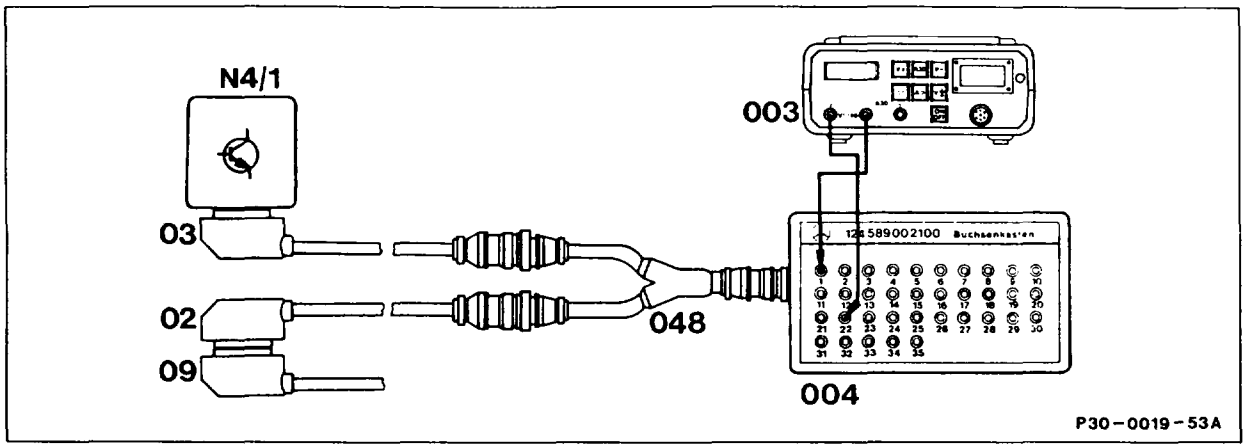

Connection diagram with multimeter for electronic accelerator pedal test program

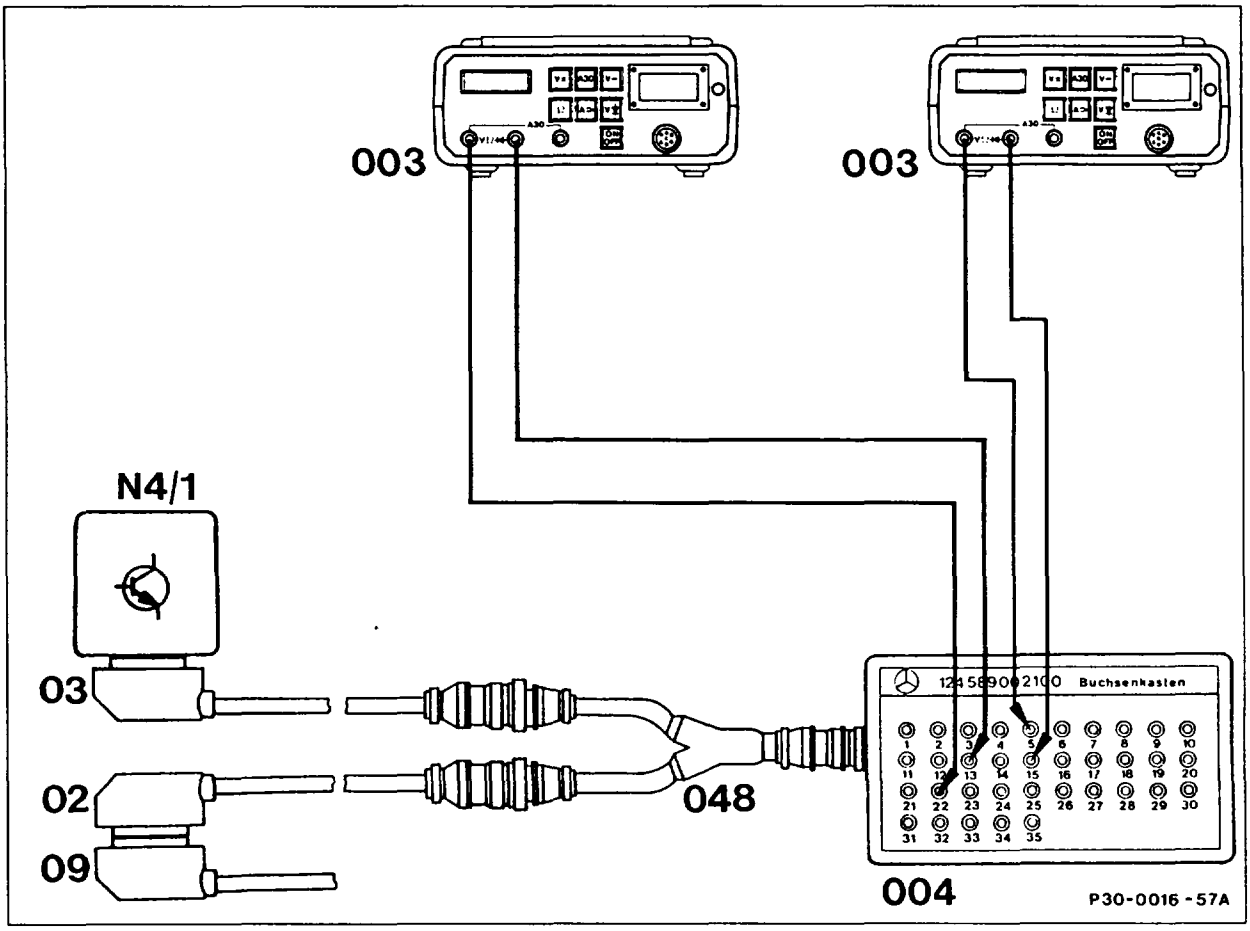

Connection diagram with 2 multimeters for electronic accelerator pedal test program

02	Test cable	645 589 02 63 00	003	Multimeter	
03	Test cable	645 589 01 63 00	004	Contact box	35-pin
09	Vehicle cable harness (electronic accelerator pedal control unit)		048	Test cable	645 589 00 63 00
			N4/1	Electronic accelerator pedal (EFP) control unit	

Special tools

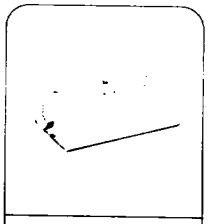

124 589 00 21 00
54

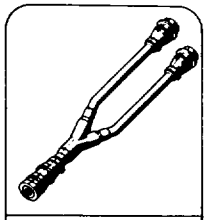

645 589 00 63 00
42 54

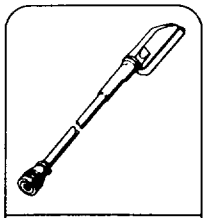

645 589 01 63 00
42 54

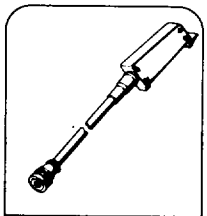

645 589 02 63 00
42 54

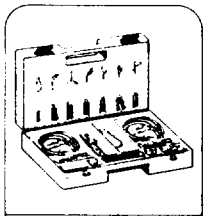

201 589 00 99 00
15 54

Commercially available tools and testers (see Workshop Equipment Manual)

Designation	e.g. Make, order no.
Multimeter	Sun, DMM-5
Frequency generator	Sun, DTR 8416

The stud (arrow) on the test cable 645 589 02 63 00 must be sawn off.

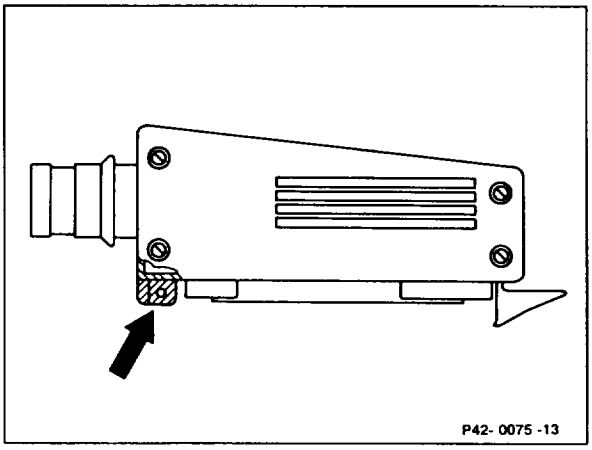

Symbols for testers

35-pin contact box
 Connector
Contact
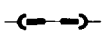 Bridge

Preconditions for test

- Accelerator control linkage correctly set and check for ease of movement (30–1010).
- Battery voltage 11–14 V.

Symbols for test mode with multimeter

Function generator, square-wave signal shape
Multimeter resistance mode
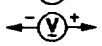 Multimeter DC voltage mode

Note

If the specification of a main test step, e.g. test step 3.0, is in order, continue with the next main test step, e.g. test step 4.0.
If the specification in the main test step, e.g. test step 3.0, is not achieved, continue test with sub-test step, e.g. test step 3.1.

See appropriate wiring diagram volume for wiring diagrams.

Test step	Test scope	Test connection	Operation/ Requirement	Specification	Possible cause/Remedy
1.0	**Ground point at electronic accelerator pedal control unit (N4/1)**	N4/1 22 — + N4/1 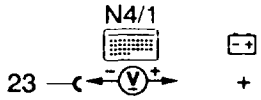 23 — +	Ignition: **OFF**	11–14 V 11–14 V	Battery ground connection (G1) loose, Open circuit in wiring Battery ground connection (G1) loose, Open circuit in wiring
2.0	**Voltage supply, electronic accelerator pedal control unit (N4/1)**	N4/1 22 — 1 N4/1 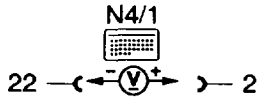 22 — 2	Ignition: **ON**	11–14 V 11–14 V	Cable connection (N4/1) → (F1) fuse 6 Cable connection (N4/1) → (F1) fuse 6
3.0	**Electronic accelerator pedal position sensor (R25) voltage supply potentiometer**	N4/1 5 — 9	Ignition: **ON** Note voltage level	6,8–7,6 V Starting value "A" for table "Voltage values position sensor (R25)"	Open circuit in wiring ⇒ 7.0, Electronic accelerator pedal position sensor (R25), Electronic accelerator pedal control unit (N4/1)

Test step	Test scope	Test connection	Operation/ Requirement	Specification	Possible cause/Remedy
3.1	Electronic accelerator pedal position sensor (R25) potentiometer signal	N4/1 5 — 15	Ignition: **ON** Idle position "a," depress accelerator, full throttle position "b," kickdown "c."	6.8–7.6 V Starting value "A" for table "voltage values position sensor (R25)"	Open circuit in wiring, see test step 7.0
3.2	Electronic accelerator pedal position sensor (R25) switching point safety switch	N4/1 22 — 13	Ignition: **ON** Idle position. Slowly deflect accelerator pedal until switching point occurs.	< 1 V 11–14 V	Open circuit in wiring, 7.0
		N4/1 5 — 15 Second multimeter to contact box	Note voltage level at switching point.	Voltage values see table "voltage values position sensor (R25)" column "d"	Electronic accelerator pedal position sensor (R25)

Test step	Test scope	Test connection	Operation/ Requirement	Specification	Possible cause/Remedy
3.3	Position sensor (R25)	N4/1 1 — 9 5 — 22 5 — 15	Ignition: **OFF** Disconnect coupling of electronic accelerator pedal control unit. Ignition: **ON** Deflect lever on actuator to full throttle stop.	Voltage must rise to >9 V.	Electronic accelerator pedal position sensor
3.4	Idle speed signal	N4/1 8 — 22	Ignition: **ON** Idle position Depress accelerator.	< 1 V 11–14 V	Open circuit in wiring, Electronic accelerator pedal position sensor, Electronic accelerator pedal control unit (N4/1)
4.0	**Electronic accelerator pedal actuator (M16/1) voltage supply potentiometer**	N4/1 6 — 26	Ignition: **ON** Note voltage value	6.8–7.6 V Starting valuve "B" for table "voltage values electronic accelerator pedal (M16/1)"	Open circuit in wiring, see test step 8.0, Electronic accelerator pedal control unit (N4/1)

Test step	Test scope	Test connection	Operation/ Requirement	Specification	Possible cause/Remedy
4.1	Actuator (M16/1) electronic accelerator pedal potentiometer	N4/1 6 — 28	Ignition: **ON** Idle osition "e," Depress accelerator Full throttle position "f"	Voltage values, see table "Voltage values actuator (M16/1)" columns "e, f"	Open circuit in wiring, see test step 8.0
4.2	Actuator, electronic accelerator pedal (M16/1) switching point of safety switch	N4/1 22 — 29	Ignition: **ON** Idle position. Slowly deflect accelerator pedal until switching point occurs.	11–14 V < 1 V	Open circuit in wiring, see test step 8.0
		N4/1 6 — 28 Second multimeter to contact box	Note voltage value at switching point.	Voltage values, see table "voltage values electronic accelerator pedal actuator (M16/1)" column "g"	Electronic accelerator pedal actuator (M16/1)

Test step	Test scope	Test connection	Operation/ Requirement	Specification	Possible cause/Remedy
4.3	Actuator (M16/1) electronic accelerator pedal DC	N4/1 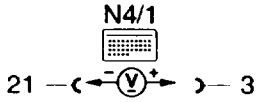 21 — (V) — 3	Ignition: **ON** Accelerator control linkage, move connecting rod (21) toward idle position.	Voltage must rise (+ value).	Open circuit in wiring
			Accelerator control linkage, move connecting rod (21) toward idle position.	Sign must change (– value).	Open circuit in wiring
4.4	Actuator, (M16/1) electronic accelerator pedal	N4/1 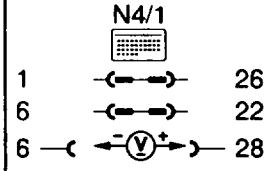 1 — 26 6 — 22 6 — (V) — 28	Ignition: **OFF** Disconnect coupling of electronic accelerator pedal control unit. Ignition: **ON** Deflect lever on actuator to full throttle stop.	Voltage must drop to <7 V.	Electronic accelerator pedal actuator (M16/1)
4.5	Actuator, (M16/1) electronic accelerator pedal	N4/1 21 — (Ω) — 3	Ignition: **OFF** Disconnect coupling of electronic accelerator pedal control unit.	<10 Ω	Electronic accelerator pedal actuator (M16/1)

Test step	Test scope	Test connection	Operation/ Requirement	Specification	Possible cause/Remedy
5.0	**Starter lockout and reversing light switch**	N4/1 22 — V — 33	Ignition: **ON** Selector lever position "P."	< 1 V	Electronic accelerator pedal actuator (M16/1)
			Selector lever position "R."	11–14 V	Open circuit in wiring
			Part throttle and shift selector lever from "P" to "R" and "R" to "P."	Position of lever at electronic accelerator pedal actuator must change.	Electronic accelerator pedal control unit (N4/1)
6.0	**Fuel pump relay (N16/4) or engine systems control unit (N16) in model 129 and (J) (USA) as of 1990**	N4/1 22 — V — 30	Engine: **start idling** Separate test cable 645 589 02 63 00 before Y piece. Ignition: **OFF** Connect test cable 645 589 02 63 00 before Y piece.	11–14 V Engine must cut out	Open circuit in wiring ⚠ Contact 30 is not short circuit proof to ground, Electronic accelerator pedal control unit (N4/1), Check whether wiring is correctly connected

Test step	Test scope	Test connection	Operation/ Requirement	Specification	Possible cause/Remedy
7.0	**Test insulation resistance of cables between plug connection of electronic accelerator pedal position sensor (R25x1) and coupling of electronic accelerator pedal control unit (N4/1)**	R25x1 1 — Ω — 2 1 — Ω — 3 1 — Ω — 6 1 — Ω — 7 2 — Ω — 3 2 — Ω — 6 2 — Ω — 7 3 — Ω — 6 3 — Ω — 7 6 — Ω — 7	Ignition: **OFF** Disconnect coupling at electronic accelerator pedal control unit, separate plug connections at electronic accelerator pedal position sensor and electronic accelerator pedal actuator.	>500 kΩ	if <500 kΩ replace wiring harness
8.0	**Test insulation resistance of cables between plug connection electronic accelerator pedal actuator (M16/1) and coupling of electronic accelerator pedal control unit (N4/1)**	M16/1x1 1 — Ω — 2 1 — Ω — 3 1 — Ω — 4 1 — Ω — 5 1 — Ω — 6 1 — Ω — 7 2 — Ω — 3 2 — Ω — 4 2 — Ω — 5 2 — Ω — 6 2 — Ω — 7 3 — Ω — 4 3 — Ω — 5 3 — Ω — 6 3 — Ω — 7 4 — Ω — 5 4 — Ω — 6 4 — Ω — 7 5 — Ω — 6 5 — Ω — 7 6 — Ω — 7	Ignition: **OFF** Disconnect coupling at electronic accelerator pedal control unit, separate plug connections at electronic accelerator pedal position sensor and electronic accelerator pedal actuator.	>500 kΩ	if <500 kΩ replace wiring harness

Voltage values electronic accelerator pedal position sensor (R25)

"A" Voltage supply potentiometer V	"a" Voltage at idle position V	"b" Voltage at full throttle position V	"c" Voltage at kickdown V	"d" Voltage at switching point of safety switch V
6.8	0.50–0.56	5.92–5.98	5.92–6.37	0.86–1.13
6.9	0.51–0.57	6.00–6.07	6.00–6.46	0.87–1.14
7.0	0.52–0.58	6.09–6.16	6.09–6.55	0.89–1.16
7.1	0.53–0.58	6.18–6.25	6.18–6.64	0.90–1.17
7.2	0.53–0.59	6.26–6.34	6.26–6.74	0.91–1.19
7.3	0.54–0.60	6.35–6.42	6.36–6.83	0.92–1.21
7.4	0.55–0.61	6.44–6.51	6.44–6.92	0.94–1.22
7.5	0.56–0.62	6.53–6.60	6.53–7.01	0.95–1.24
7.6	0.56–0.63	6.61–6.69	6.61–7.11	0.96–1.26

Voltage values electronic accelerator pedal actuator (M16/1)

"B" Voltage supply potentiometer V	"e" Voltage at idle position V	"f" Voltage at full throttle position V	"g" Voltage at switching point of safety switch V
6.8	6.05–6.19	0.61–0.75	5.35–5.68
6.9	6.14–6.28	0.62–0.76	5.43–5.76
7.0	6.23–6.37	0.63–0.77	5.51–5.89
7.1	6.32–0.46	0.64–0.78	5.59–5.93
7.2	6.41–6.55	0.65–0.79	5.67–6.01
7.3	6.50–6.64	0.66–0.80	5.75–6.10
7.4	6.59–6.73	0.67–0.81	5.82–6.18
7.5	6.68–6.83	0.68–0.83	5.90–6.26
7.6	6.76–6.92	0.69–0.84	5.98–6.35

Location of plug connection

Model 124

X89/1 Plug connection, electronic accelerator pedal (EFP) control unit/ASR 2-pin

X89/2 Plug connection, electronic accelerator pedal (EFP) control unit/engine wiring harness, 3-pin

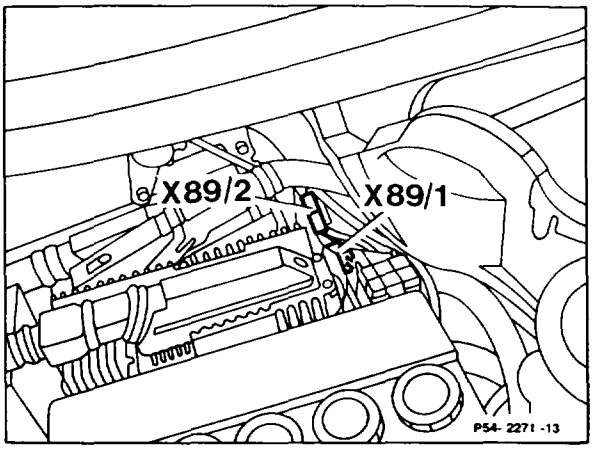

Model 124

M16/1x1 Plug connection, electronic accelerator pedal (EFP) actuator

R25x1 Plug connection, electronic accelerator pedal (EFP) position sensor

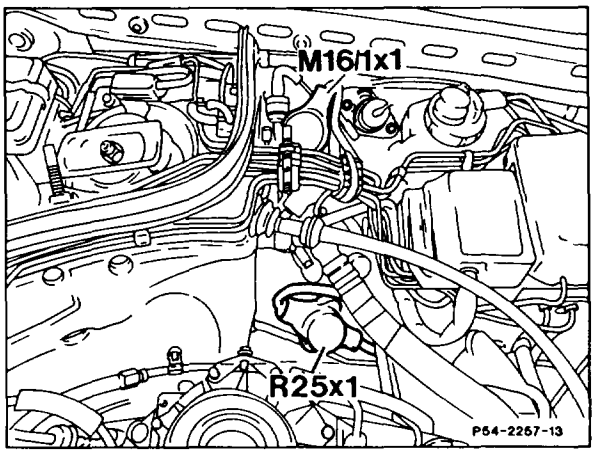

Model 124

S40x1 Plug connection, Tempomat cruise control (TPM) pushbutton

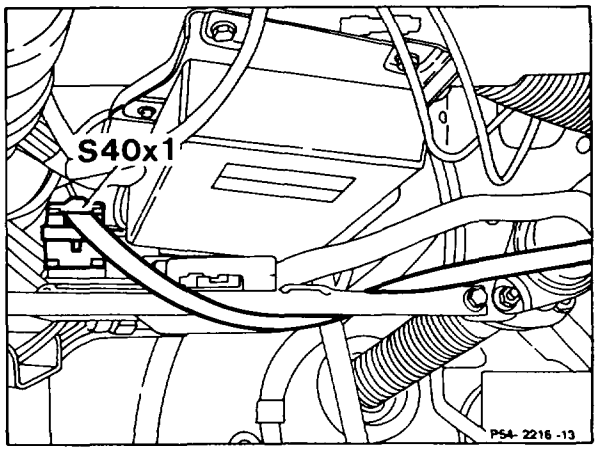

Model 129

M16/1x1 Plug connection, electronic accelerator pedal (EFP) actuator

R25x1 Plug connection, electronic accelerator pedal (EFP) position sensor

Y52x1 Plug conection, right front axle damper valve

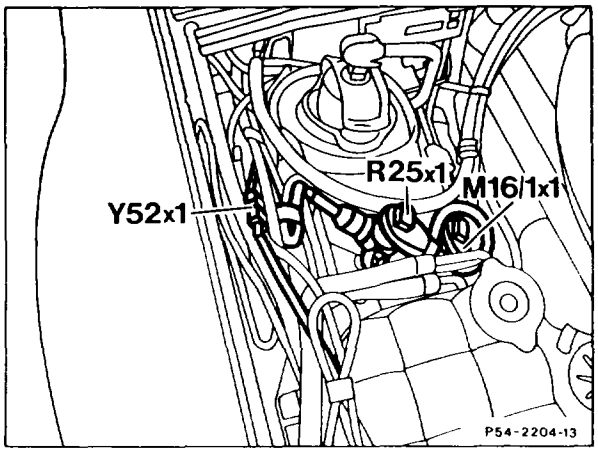

Model 129

X18/10 Interior/ASR plug connection, 8-pin

X85 Plug connection, heater and automatic temperature control (HAU, TAU)/engine wiring harness, 4-pin

X89/4 Plug connection, electronic accelerator pedal (EFP) control unit/KE, 1-pin

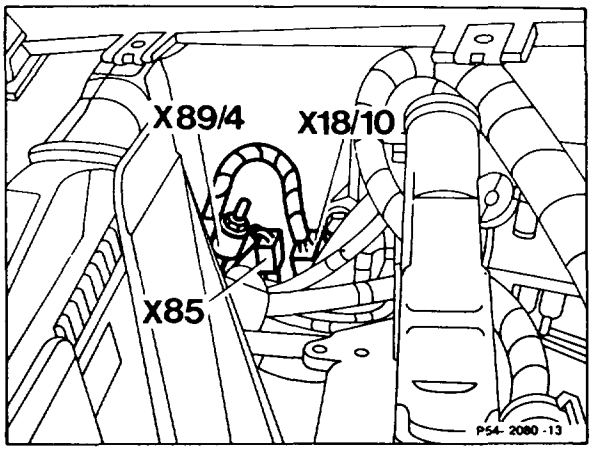

Model 129

X11/4 Test coupling for diagnosis, 16-pin (pulse signal)

X30/1 Plug connecction, multi-function block

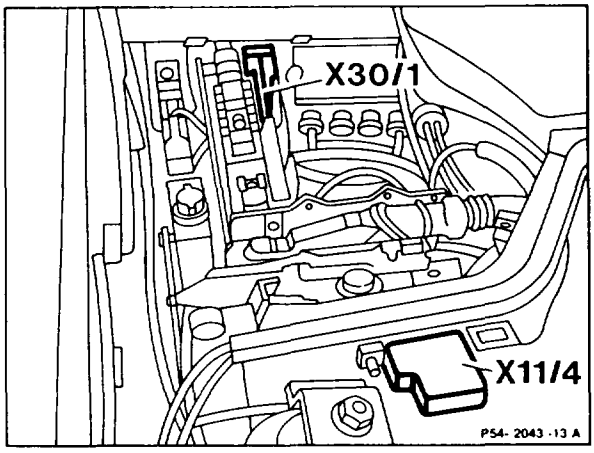

Model 201

X89/2 Plug connection, electronic accelerator pedal (EFP) control unit/engine wiring harness, 2-pin

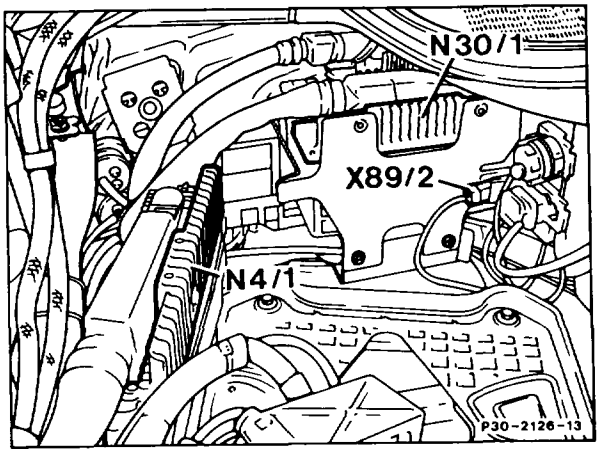

Model 201

M16/1x1 Plug connection, electronic accelerator pedal (EFP) actuator

R25x1 Plug connection, electronic accelerator pedal (EFP) position sensor

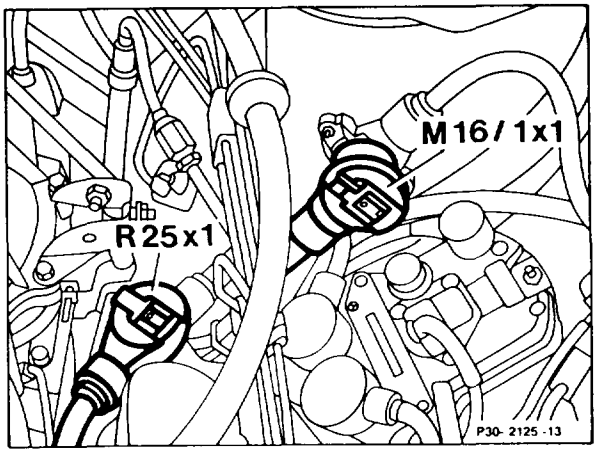

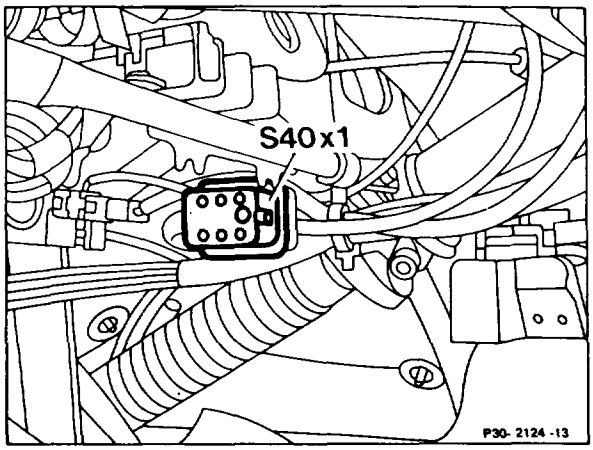

Model 201

S40x1 Plug connection, Tempomat cruise control (TPM) pushbutton

30–1151 Removing and installing electronic accelerator pedal control unit

Operation no. of operation texts and work units or standard texts and flat rates:
30–1151.

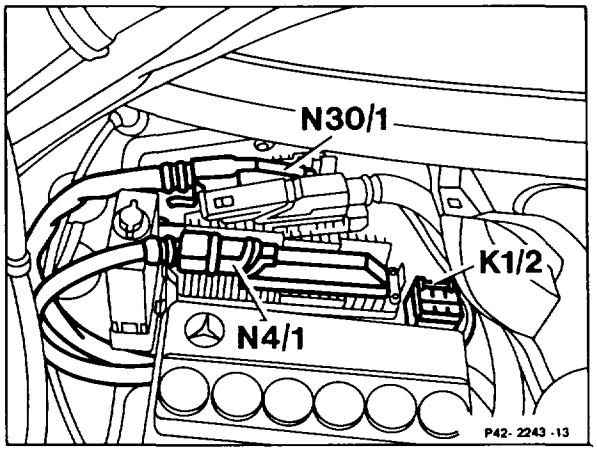

Models 124, 129

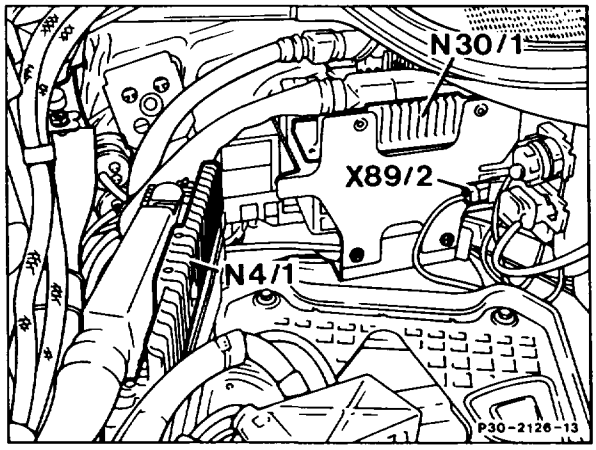

Model 201

Battery	disconnect, connect.
Coupling of wiring harness	unplug from electronic accelerator pedal control unit (N4/1), plug in.
Electronic accelerator pedal control unit (N4/1)	remove, install.

Note
On model 126 the electronic accelerator pedal control unit (N4/1) is located in the left footwell. To remove and install, take off trim, insert.

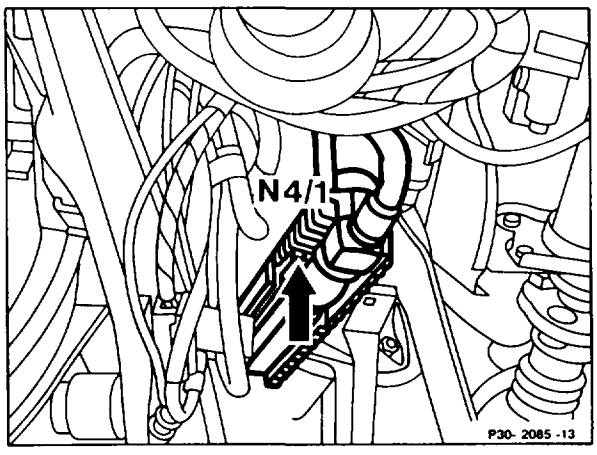

Model 126

30–1152 Removing and installing electronic accelerator pedal actuator

Preceding work:
Removing and installing air cleaner (09–1051).

Operation no. of operation texts and work units or standard texts and flat rates:
30–1151.

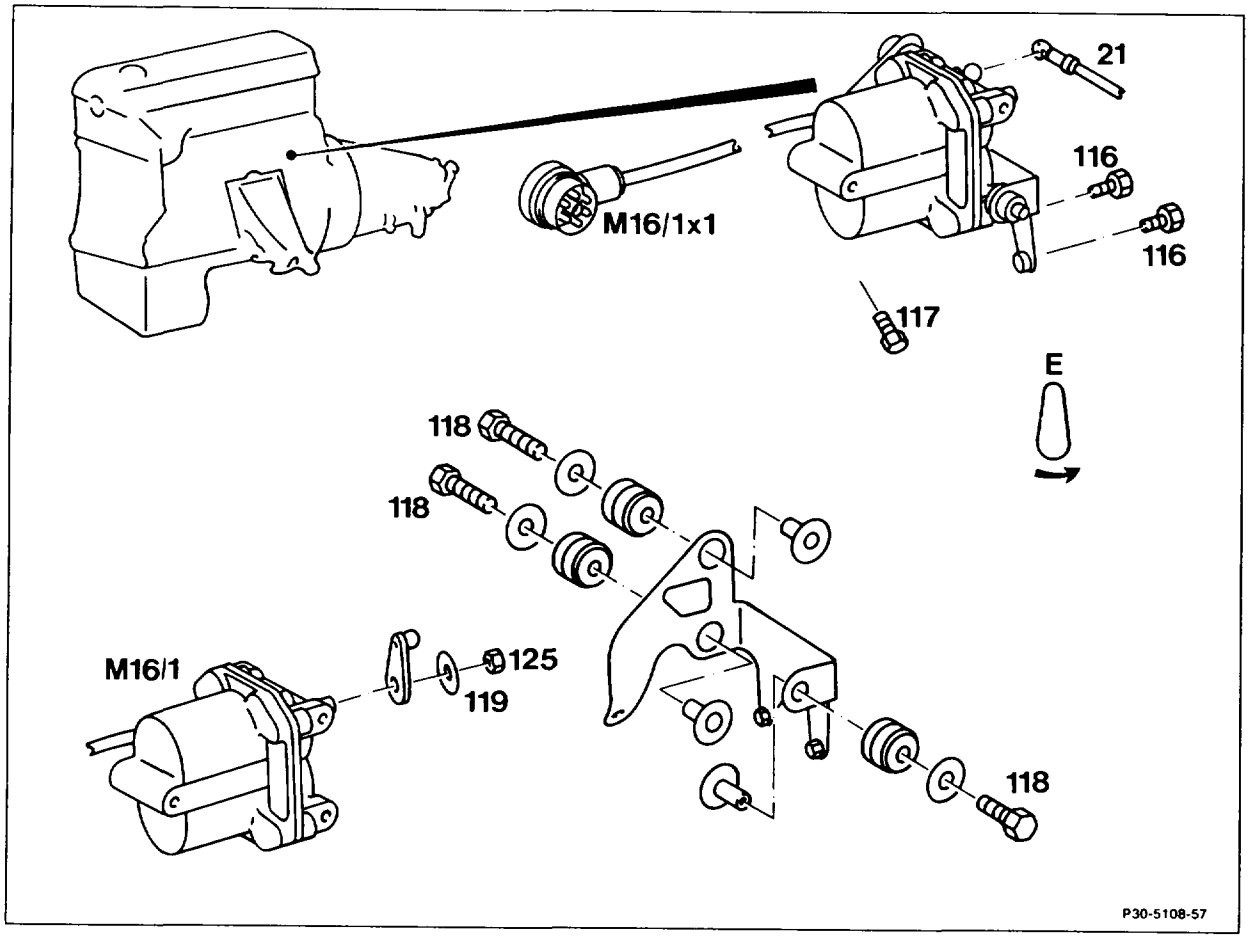

Battery	disconnect, connect.
Bottom engine compartment panel	remove, install.
Plug connection of electronic accelerator pedal actuator (M16/1x1) on model 124 at holder of diagnostic socket, on model 129 at right wheel-house or on model 201 at holder of ABS hydraulic unit	unplug from coupling, plug in.
Cable of electronic accelerator pedal actuator (M16/1)	expose.
Push rod (21) at electronic accelerator pedal actuator (M16/1)	detach, attach, adjust (30–1010).
Securing bolts (116, 117)	unscrew, screw in.

Electronic accelerator pedal actuator (M16/1) with holder	take out downward. On model 124 with A/C compressor, slacken the bottom securing bolts for engine mount and raise engine.
Securing bolts (118)	unscrew, screw in. Tightening torque 12 Nm.
Locking washer (119)	release, secure.
Securing nut (125)	take out, insert. Tightening torque 10 Nm.
Lever (E)	take off, fit on.
	Installation note Turn drive shaft of electronic accelerator pedal actuator (M16/1) in opposite direction to arrow against stop, install lever (E) and secure nut (126).
Accelerator control linkage	adjust (30–1010).

30–1156 Removing and installing electronic accelerator pedal position sensor

Preceding work:
Removing and installing air cleaner (09–1051).

Operation no. of operation texts and work units or standard texts and flat rates:
30–1156.

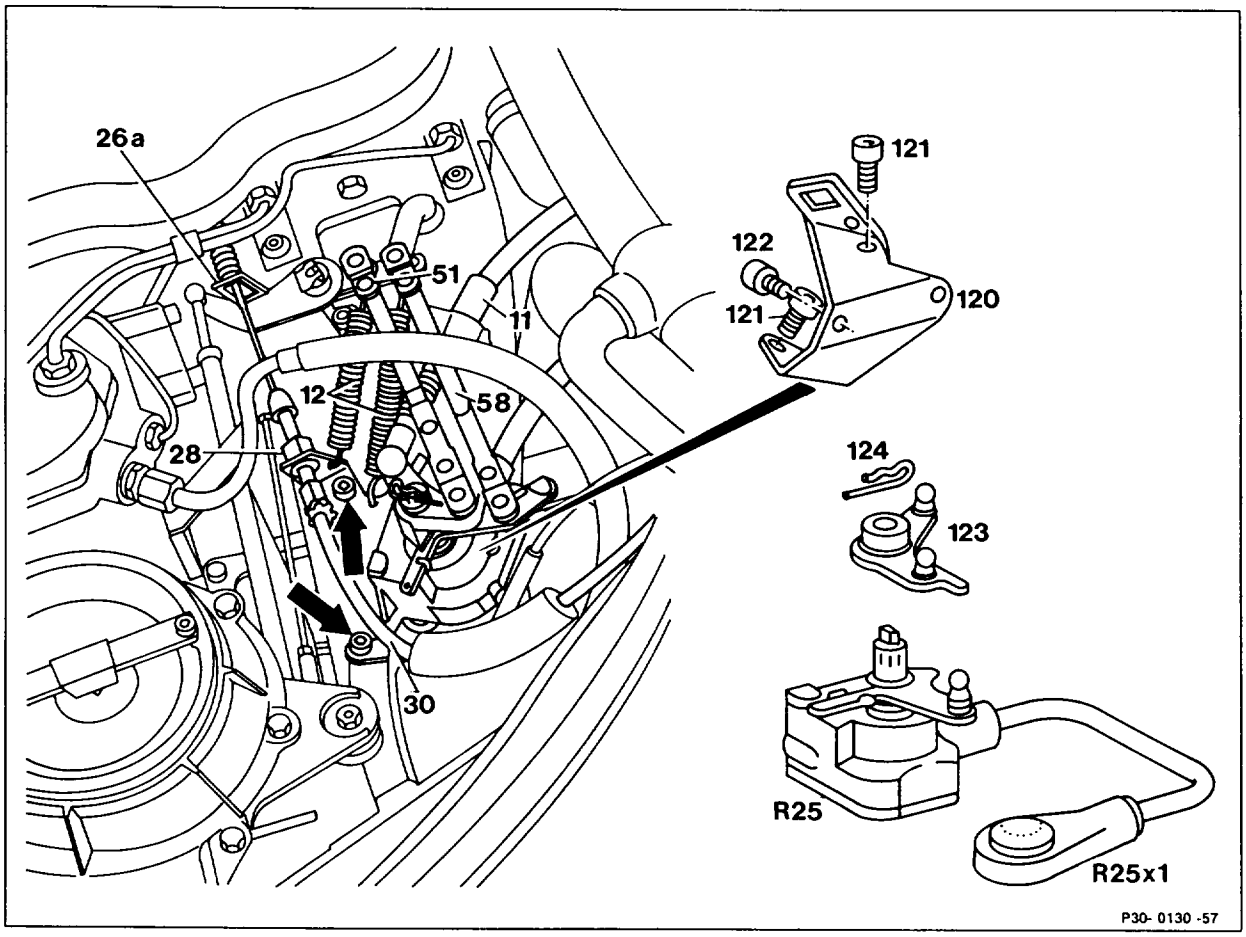

Guide piece (26a)	remove, install.
	Note First of all push plastic ball forward. When installing, ensure that the plastic ball engages in the guide piece.
Bowden cable (30)	take out through the slot, insert.
Plastic clip (28)	remove, install.
Bowden cable (30)	take out of bearing bracket (120), insert.
Connecting rods (51, 58)	pull off, fit on.
Return springs (12)	detach, attach.
Control pressure cable (11)	detach, attach.

Screws (121, arrows)	unscrew, screw in.
Position sensor (R25)	take off with bearing bracket (120), fit on.
Screws (122)	unscrew, screw in.
Position sensor (R25)	off from bearing bracket (120), fit on.
Position sensor plug connection (R25x1)	disconnect, plug in.
Lever (123)	remove from position sensor (R25), fit on. To do this, pull off locking element (124), install.
Accelerator control linkage	adjust (30–1010).

Note

Models 124, 126, 129, 201 basic and national version (USA) with ASR II

New production start of position sensor, actuator in control unit for electronic accelerator pedal (EFP).

Production breakpoint: June 1989

Model	Engine	Engine end no. automatic transmission
126.020	103.941	013694
126.024/025	103.981	088603

Production breakpoint: July 1989

Model	Engine	Engine end no. automatic transmission
124.026	103.940	068424
124.030/050/090	103.983	168785
201.029	103.942	032064

Production breakpoint: August 1989

Model	Engine	Engine end no. automatic transmission
129.060	103.984	000110

Production breakpoint: June 1990 (USA)

Model	Engine	Engine end no. automatic transmission
124.026	103.940	081064
124.030/050/090	103.983	215118
126.024/025	103.981	119422
201.029	103.942	048317

30–1321 Removing and installing accelerator pedal

Operation no. of operation texts and work units or standard texts and flat rates:
30–1321.

A. Model 107

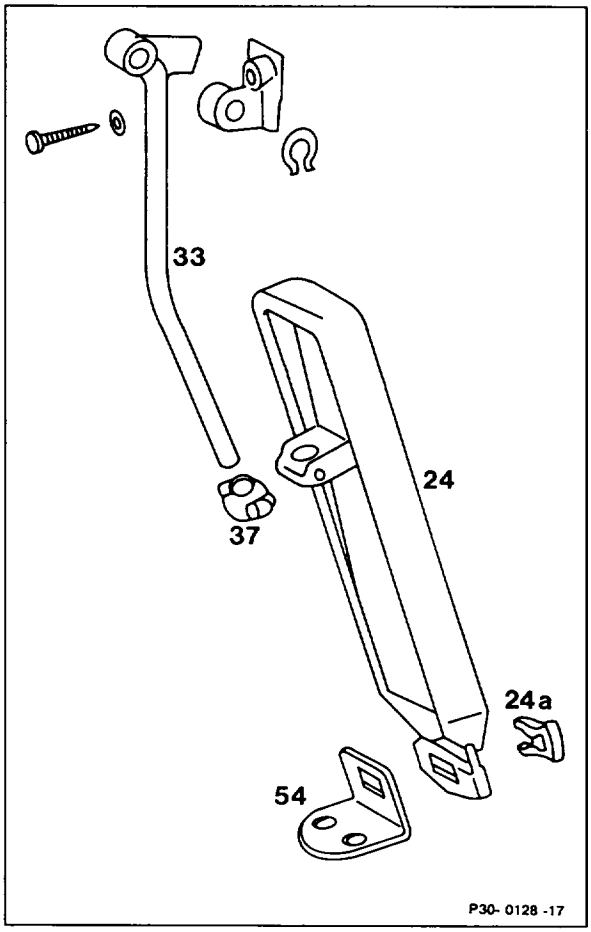

Lugs of expanding clip (24a)	compress behind accelerator pedal (24), remove expanding clip (24a), engage.
	Installation note Ensure that the expanding clip engages properly.
Accelerator pedal (24)	pull off the attachment plate (54), fit on.
Pivot piece (37)	pull off accelerator pedal lever (33), fit on.

Accelerator pedal (24)	pull off accelerator pedal lever (33), fit on.

Note
The bearing points should be coated with anti-corrosion grease 000 989 87 51 10.

B. Models 124, 126, 201

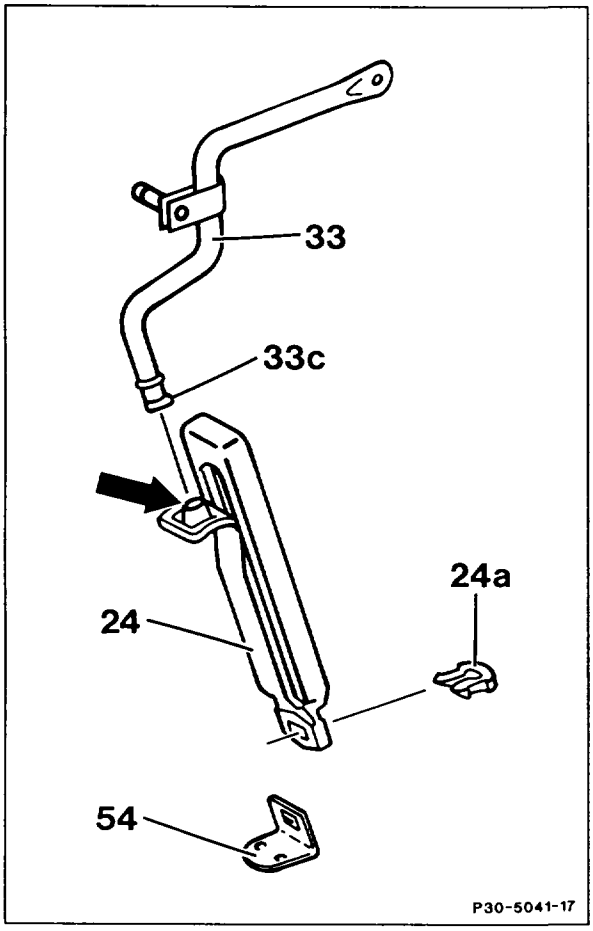

Lugs of expanding clip (24a)	compress behind accelerator pedal (24). Remove expanding clip (24a), engage.

Installation note
Ensure that the expanding clip engages correctly.

Accelerator pedal (24)	pull off the attachment plate (54), fit on and turn 120° to the left.

Accelerator pedal (24)	pull off accelerator pedal lever (33) down, fit on. When this is done, the lug (33c) on the accelerator pedal lever must be aligned with the groove (arrow) in the accelerator pedal.

Note
The bearing points should be coated with anti-corrosion grease 000 989 87 51 10.
The connection from accelerator pedal to accelerator pedal is maintenance-free and does not require to be lubricated.

C. Model 129

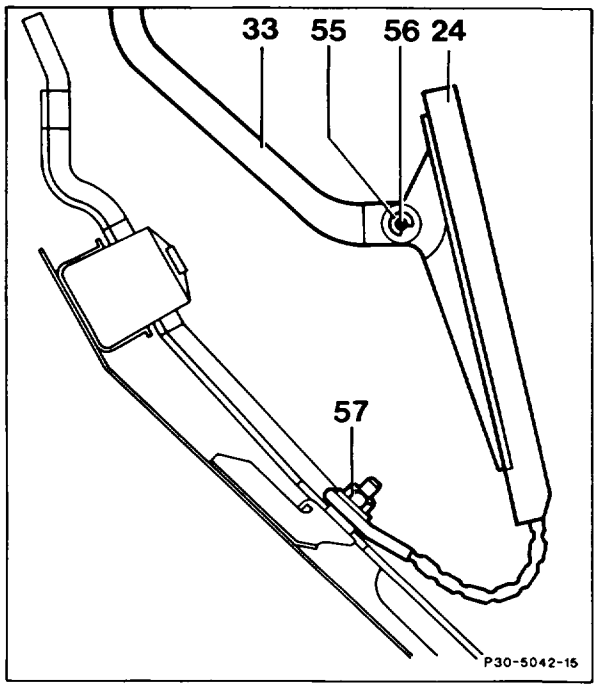

Cover below instrument panel	remove, install.
Circlip (55)	pull off, fit on.
Pin (56)	press out, insert.

Nut (57)	unscrew, screw on (reference value 0.5 Nm), take off accelerator pedal, fit on.

Note

The bearing points and also the ball sockets should be coated with anti-corrosion grease 000 989 87 51 10.

30–3022 Removing and installing fire wall bearing with accelerator pedal lever

Operation no. of operation texts and work units or standard texts and flat rates:
30–3022.

A. Model 107

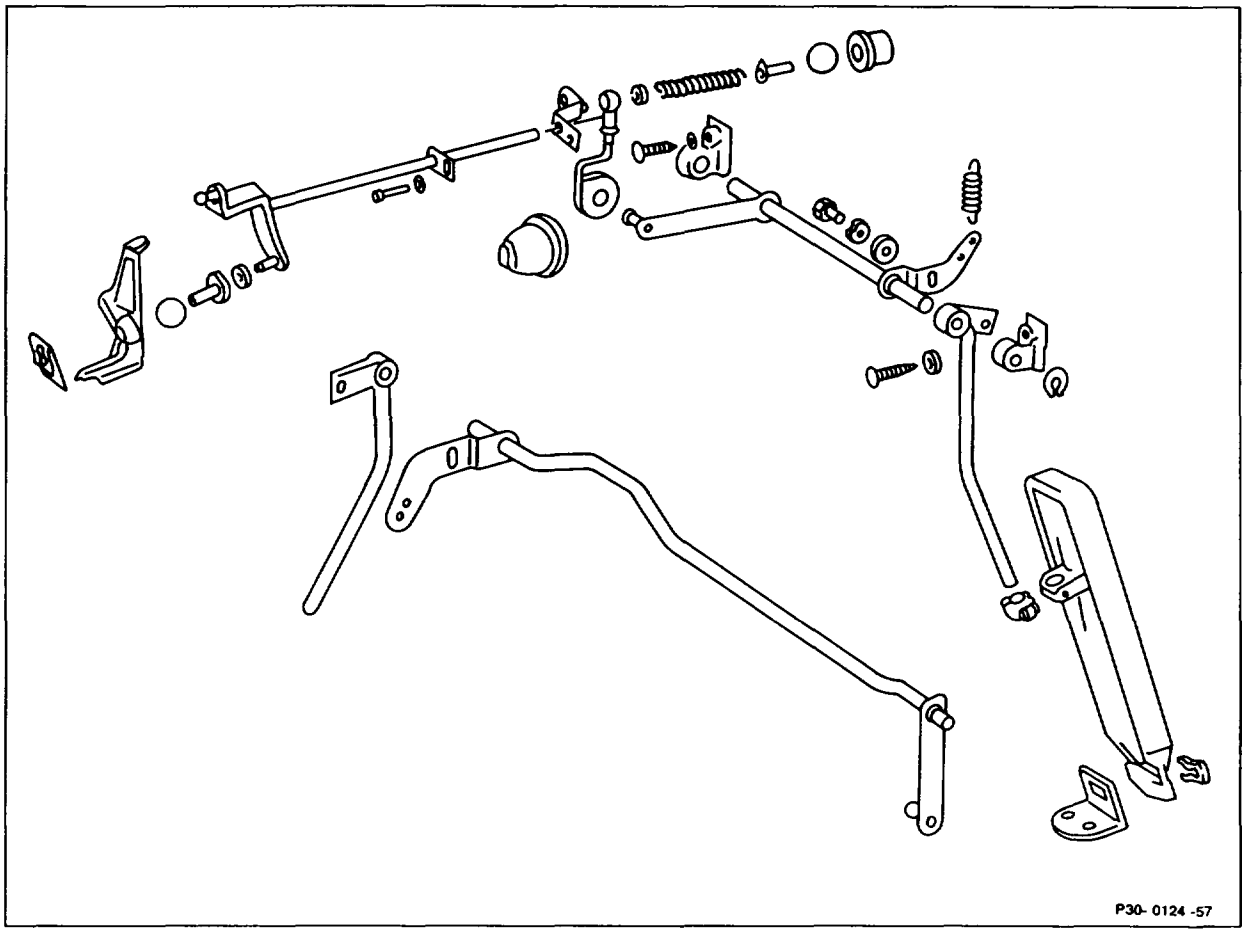

Chassis accelerator control shaft . . . . . remove, install (30–0320).

B. Models 124, 129, 201

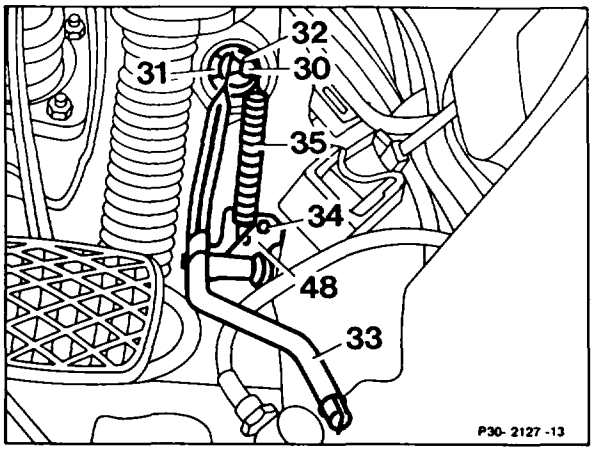

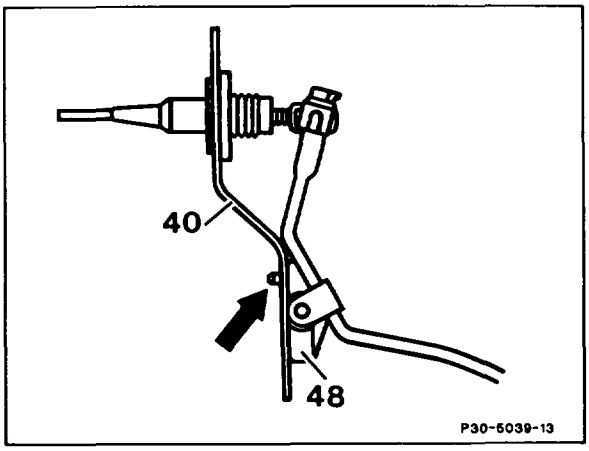

Accelerator pedal	remove, install (30–1321).
Footwell trim	remove, install.
Return spring (35)	detach, attach.
Bowden cable (30)	remove from accelerator pedal lever (33), fit on.
	Model 201 Pull off circlip, fit on.
Screws (34)	remove with washers, screw in.
Fire wall bearing (48)	remove together with accelerator pedal lever (33) from the fire wall (40), fit on.
	Installation note **Models 124, 129** The lug (arrow) of the fire wall bearing (48) must engage in the hole on the fire wall.
Fire wall bearing (48)	pull off of the accelerator pedal lever (33), fit on. To do this, pull off circlip and thrust washer, fit on.
	Note The bearing points and also the ball sockets of the accelerator control should be greased with anti-corrosion grease 000 989 87 51 10.
Accelerator control linkage	adjust (30–1010).

Note

Models 124, 201

Improvement in response and variability by converting accelerator pedal lever (extending), bearing point and full throttle stop with pedal travel enlargment by 3° in direction of full throttle.

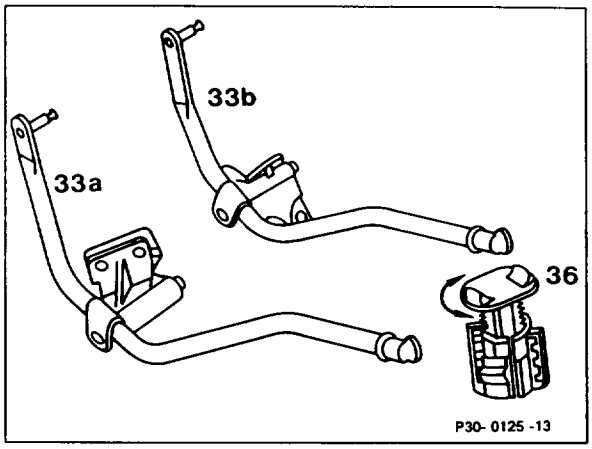

33a Accelerator pedal lever model 124
33b Accelerator pedal lever model 201
36 Full throttle stop

Production breakpoint: 11/88

Model	As of vehicle ident end no. A	As of vehicle ident end no. F
124.026/030/050/090 124.226/230/290	907 056	096 908
201.029	473 115	576 183

C. Model 126

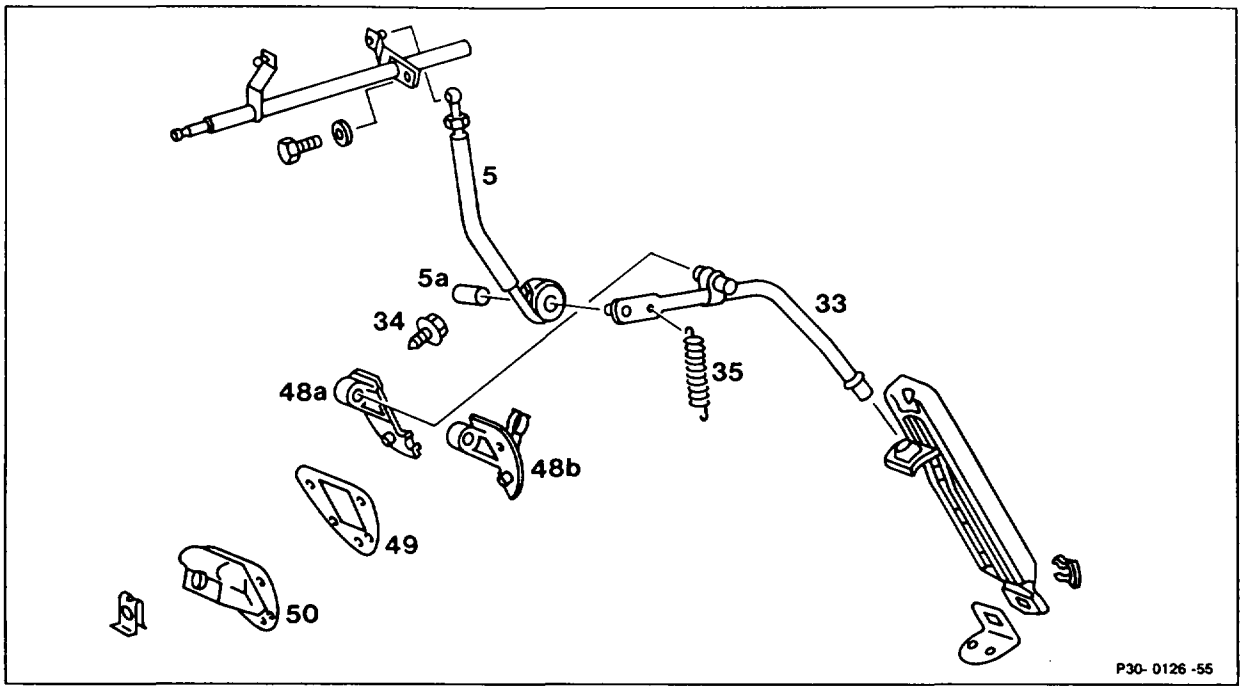

Accelerator pedal	remove, install (30–1321).
Footwell trim	remove, install.
Return spring (35)	detach, attach.
Push rod (5)	remove from accelerator pedal lever (33), fit on. Check bush (5a) for wear, replace.
Electric wiring	take out of fixtures of fire wall bearing halves (48a, 48b), insert.
Screws (34)	unscrew, screw in.
Fire wall bearing halves (48a, 48b)	take off the fire wall together with the accelerator pedal lever (33), fit on.
Fire wall bearing halves (48a, 48b)	remove from accelerator pedal lever (33), fit on.
Packing (49), seal (50)	take off of fire wall, install.

Note

Check parts for wear, replace if necessary.
The bearing points as well as the ball sockets of the accelerator control should be greased with anti-corrosion grease 000 989 87 51 10.

Accelerator control linkage	adjust (30–1010).

30–3402 Removing, installing and adjusting bowden cable

Preceding work:
Removing and installing accelerator pedal (30–1321).
Removing and installing air cleaner (09–1051).

Operation no. of operation texts and work units or standard texts and flat rates:
30–3402.

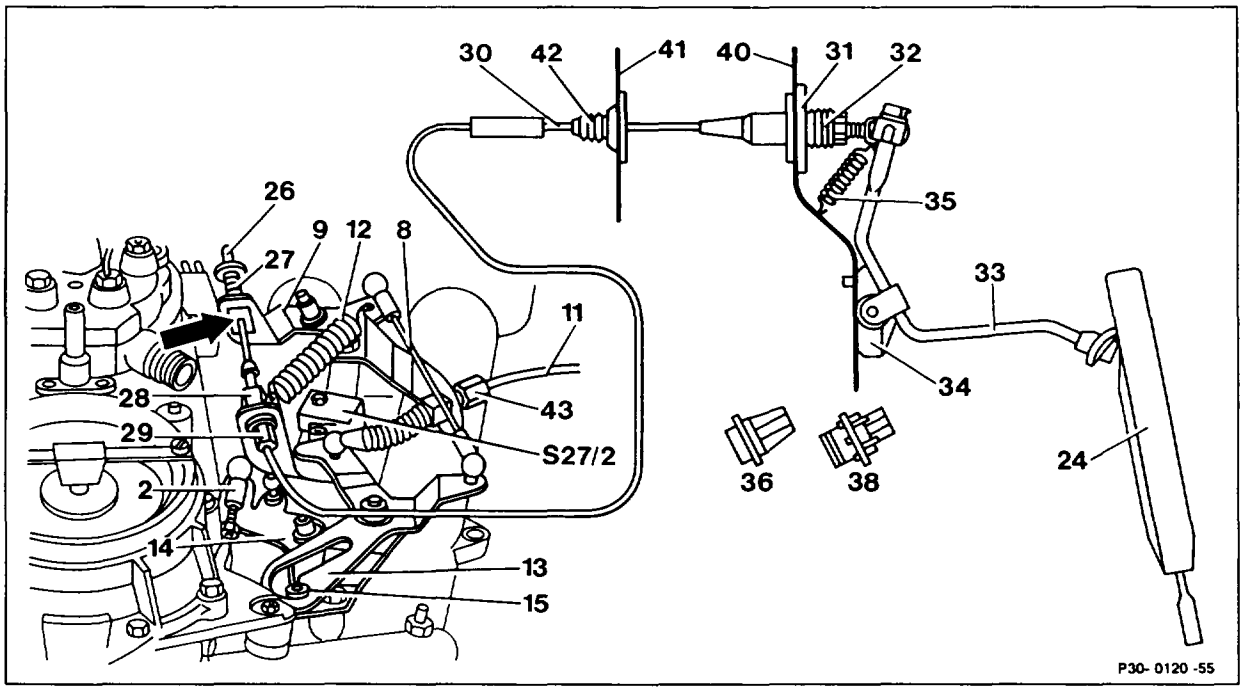

Shown on model 124

Footwell trim	remove, install.
Return spring (35)	detach, attach.
Return spring (12)	detach, attach.
Guide piece (arrow)	remove, install.

Note
First of all push plastic ball forward. When installing, ensure that the plastic ball engages in the guide piece.

Bowden cable (30)	take out through the slot.
Plastic clip (28)	remove, install.
Bowden cable (30)	take out, insert.
Vacuum lines	pull off, fit on.

Bowden cable (30)	push from passenger compartment toward engine compartment through the fire wall (40), insert.
	Note Do not press out rubber grommet (31).
Bowden cable (30)	take out of engine compartment panel (41), insert.
	Note The bearing points and the ball sockets of the accelerator control and also the Bowden cable between the end piece and guide piece should be greased with anti-corrosion grease 000 989 87 51 10.
Accelerator control linkage	adjust (30–1010).

Note

Models 124 and 201 as of 01/93
Bowden cable with double spiral (model 124 shortened cable lenght)

The cruise control/Tempomat system is operational when the ignition is switched on. For actual operation, however, the vehicle speed should be above approx. 40 km/h. If the vehicle travels at the desired speed, a quick tipping against pushbutton switch in direction of "accelerating - stabilizing" or "decelerating - stabilizing" is enough to maintain this speed until the driver decides on a new speed or the system is switched off. To adapt this fixed speed e.g. to the traffic flow, the pushbutton switch must be kept in position of "accelerating - stabilizing" or "decelerating - stabilizing" until the desired speed is attained. On vehicles with a new control unit (phased-in starting 09/86) and identified by reference resistor, quick tipping of switch in direction of "accelerating - stabilizing" or "decelerating - stabilizing" will increase or reduce the speed by 1 km/h. In such a case, the vehicle is accelerated and controlled at 0.7 m/s^2. The new speed will be maintained when the switch is released. Quick tipping of the switch in the direction of "Off" or actuation of brake pedal or clutch pedal will switch off cruise control/Tempomat, and the regulating system will move into idle speed position.

Switching off by means of tipping switch will activate the actuator motor, which will move the regulating system into idle speed position.

On the other hand, when switching off by depressing the brake pedal or the clutch pedal, the power flow in the actuator is immediately interrupted by de-energizing the electromagnetic clutch and by a retracting spring disengaging a gear wheel of the actuator gear unit. The retracting springs pull the throttle control into the idle speed position. After switching off, the system remains operational until the ignition is switched off. If, upon operation of the brake or clutch or after switching off, the pushbutton switch is briefly tipped in the direction of "memory" at a vehicle speed above approx. 40 km/h, the vehicle automatically accelerates at 1 m/s^2 to the last speed set during "stabilization". The speed set last is erased when the ignition is switched off.

If the set speed is exceeded by acceleration, e.g. when passing another vehicle, the vehicle will automatically return to the previously set speed when the accelerator pedal is released.

If the engine output is not enough for driving uphill, the set speed will drop. It will be built up again as soon as the gradient declines and the speed has not dropped to below 40 km/h or there has been no deceleration in the meantime.

If the engine brake effect is not enough when driving downhill, the set speed is exceeded and deceleration may be required. Without braking the set speed is built up again as soon as the gradient declines.

⚠

While driving with cruise control/Tempomat do not engage the selector lever position "N" of the automatic transmission, since otherwise the engine will be revving up.

Safety circuits

The speed stored last in control unit will be cancelled when the ignition is switched off. When the ignition is switched on, the speed memory will be given the value of "0 km/h". This will make sure that when a drive is started again, e.g. after a change of driver, no unknown speed will be stored.

The speed is constantly monitored by the control unit. Each change of speed is picked up and evaluated. On control unit without reference resistor by means of a control stage (differentiating element), on control unit with reference resistor by means of a computer.

If a speed change is made by means of the tipping switch, the control stage (differentiating link) together with an operation amplifier or the computer in control unit will make sure that the specified values at switch positions "accelerating - stabilizing" of 0.7 m/s^2 or at "memory"of 1 m/s^2 are maintained.

When braking or clutching, the electromagnetic clutch in actuator is de- energized, the power flow is immediately interrupted, since a retracting spring will pull a gear wheel of actuator gear unit out of mesh. The retracting springs will pull the regulating linkage into idle speed position.
If, for example, with a defective stop lamp switch the vehicle is decelerated > 1.5 m/s^2, this condition will be handled on control unit without reference resistor by the control stage (differentiating element) in control unit. The succeeding threshold value switch will activate the actuator motor which will move the regulating linkage into idle speed position. On control unit with reference resistor the deceleration is picked up by the computer and the power flow in actuator is interrupted both when braking or clutching, since the electromagnetic clutch in actuator is de-energized.

The period up to cutout depends on intensity of deceleration.

If for some reason or other the nominal speed is exceeded by more than approx. 6 km/h, the speed monitor will react immediately. The electromagnetic clutch in actuator is de-energized, the power flow in actuator is interrupted, the regulating linkage is moving into idle speed position. If the speed threshold is then less than approx. 6 km/h, e.g. the speed is now only 5 km/h more than the nominal speed, the electromagnetic clutch is again activated and the power flow in actuator is again established.

The function of the electromagnetic clutch in actuator is monitored by the control unit during each braking step. If the power flow in actuator is not interrupted when the clutch is defective, the control unit will activate the actuator motor instead, which will then move the regulating linkage into idle speed position. This procedure is registered by the control unit and the system is made inoperative until the ignition is switched off. When the ignition is again switched on, the system will operate normally until during the next braking step, under influence of the defective electromagnetic clutch, it is again made inoperative.

The control unit with reference resistor is protected against the input of double instructions. If, for example, a defective pushbutton switch is simultaneously putting-in the instructions "acceleration and memory", the control unit will switch off the system until it is unlocked by switching the ignition off and on.

The cruise control/Tempomat system comprises the following components which are connected with each other by an electric harness.

Pushbutton switch

Position "1" or "2", tipping	=	speed is stabilized.
Position "1", hold	=	stabilized speed is increased.
Position "2", hold	=	stabilized speed is reduced.
Position "3", tipping	=	cruise control/Tempomat is switched off.
Position "4", tipping	=	speed stabilized prior to switching off adjusts itself automatically at a speed above approx. 40 km/h.

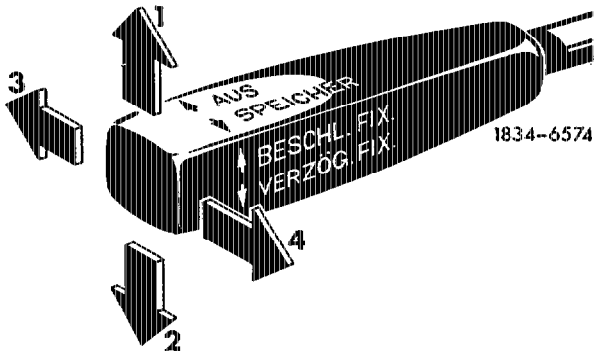

Cruise control amplifier

The Tempomat/cruise control (TPM) reference resistor amplifier (N4/2) compares the actual and the nominal speed. In the event of a departure from the nominal speed, the Tempomat/cruise control (TPM) reference resistor amplifier (N4/2) transmits corresponding control impulses to the Tempomat/cruise control (TPM) actuator (M16) until the actual and nominal speeds are again in accord.

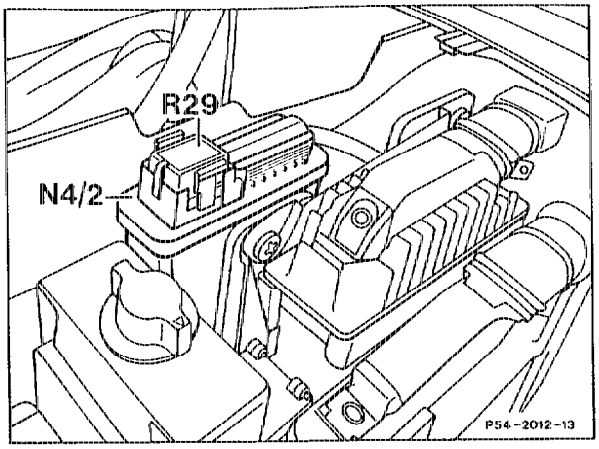

Reference resistor

The Tempomat/cruise control reference resistor (R29) serves to adapt the Tempomat/cruise control (TPM) reference resistor amplifier (N4/2) to the various vehicle models.

Road speed sensor

The cruise control amplifier receives the actual speed impulses from the Hall-effect speed sensor (B6) or inductive road speed sensor, transmission (L2) on the speedometer.

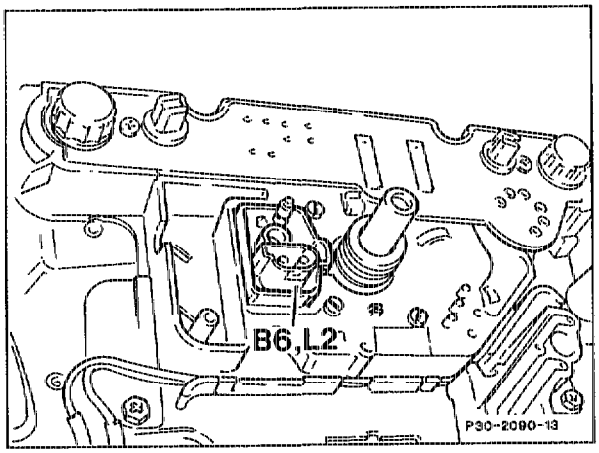

Cruise control actuator

The Tempomat/cruise control (TPM) actuator (M16) receives its control impulses from the cruise control amplifier and actuates the throttle control by way of a connecting rod.
The actuator comprises an electric motor with gear unit, an overrunning clutch, a potentiometer and an electromagnetic clutch.

The electric motor drives the output shaft, which is provided with the overrunning clutch, by way of the gear unit.

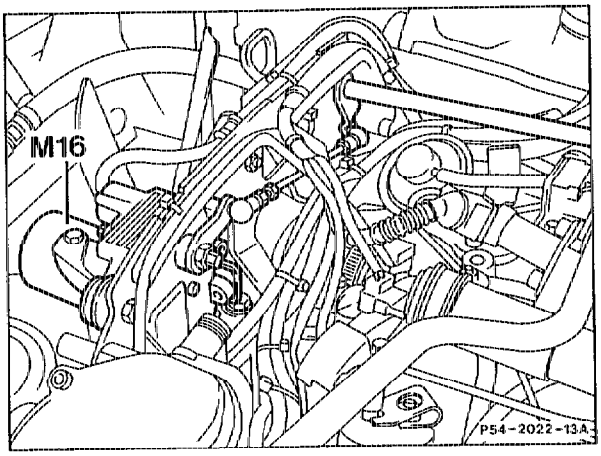

The overrunning clutch permits e.g. with set speed acceleration by means of accelerator pedal for passing other vehicles, without a need for operating the cruise control/Tempomat.

The potentiometer reports the position of the output shaft back to the control unit.

The electromagnetic clutch establishes the power flow between electric motor and output shaft by engaging a gear wheel. The clutch is engaged at the following switch positions: Accelerating - stabilizing, decelerating - stabilizing and memory. The electromagnetic clutch is switched off by actuating the brake or the clutch, but also when the system is switched off by means of the tipping switch (pushbutton switch) and when the regulating linkage has arrived at idling position. When the electromagnetic clutch is switched off, the power flow is immediately interrupted by means of a retracting spring, which pulls a gear wheel out of mesh.

On vehicles up to May 93 only
Switch actuated by clutch pedal on vehicle with manual transmission
When the clutch pedal is depressed, the clutch pedal switch, Tempomat/cruise control (TPM) (S40/1) will interrupt the ground connection from the stop lamps to the cruise control amplifier. This immediately switches off the cruise control, as during braking.

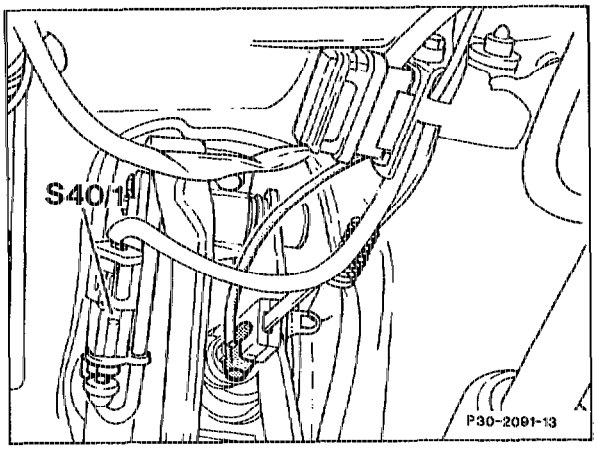

Relay on model 201.024 (standard version)
During operation of cruise control/Tempomat the relay will switch off the decel shutoff. It is painted yellow on surface for identification.

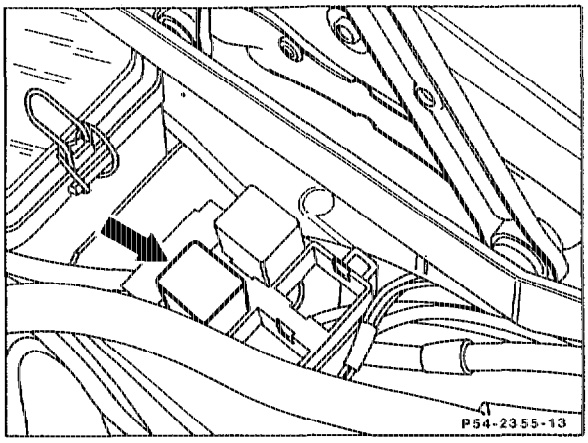

Relay on models 124.128/133/193/333/393 and 201.128 as of approx. 09/89 up to approx. 06/91
During operation of Tempomat/cruise control, the Tempomat/cruise control boost air cut-off relay (K12/1) switches off the boost air cut-off. The surface of the boost air cut-off relay is painted yellow for identification.

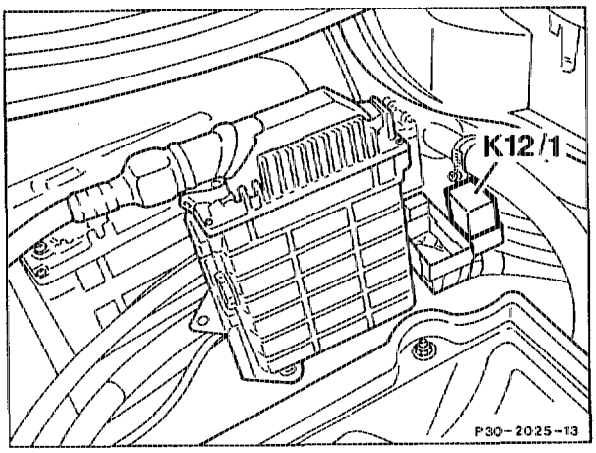

Layout model 124

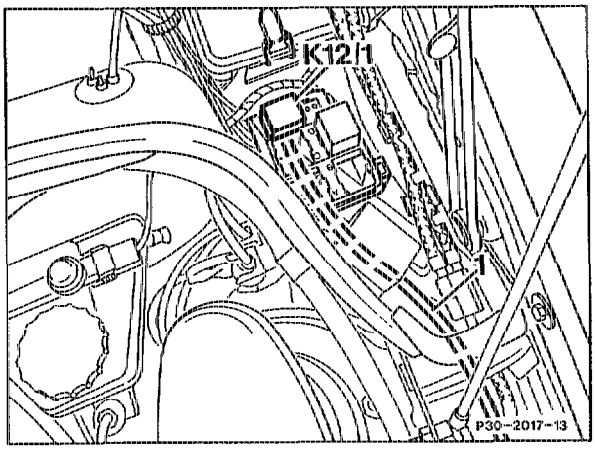

Layout model 201

Job No. of the job texts and work units and standard texts and flat rates .....

Complaint:	Cause/Remedy:
Cruise control/Tempomat not functioning.	1. Check whether connector of harness on cruise control amplifier (N4) is completely pressed on. 2. Test cruise control/Tempomat with adapter (30.0101-504)
Cruise control/Tempomat not functioning. During adapter test, LED for speedometer not or continuously lighting up, opposite to data on test card. Model 201.122 (USA) with manual transmission (model year 84 California and model year 85)	1. Green/black control line from cruise control/Tempomat speedometer connection to control unit of exhaust gas recirculation connection 5 has short to ground. 2. Exhaust gas recirculation control unit defective.
The following systems are completely or temporarily not functioning: Cruise control Speed warning (Saudi-Arabia only) Trip computer Model 124 **Note** The multipoint connector is used only if at least two of the special equipment types named above are installed.	Complete or temporary interruption, install new multipoint connector (X53/5) starting production date 49.85 (identified by green color dot) Production breakpoint: Starting chassis end no A 150123 and F 000 001
Cruise control/Tempomat not functioning following renewal or installation of a control unit part no. 005 545 05 32 up to production date 08/88.	Remove grounding bridge in 14-pole connector for control unit from jack 12 to jack 14. Connect grounding line or grounding lines to jack 12. Jack 14 is no longer engaged.
Cruise control/Tempomat temporarily not functioning.	Poor contacting on cruise control amplifier by widening of sockets. Rebend sockets, pay attention to correct connections of connector.

Cruise control/Tempomat temporarily not functioning. Cannot be switched on, switches off while driving or will be shaking (not just when driving uphill). Model 124, 201	Speed signal from Hall-effect speed sensor on instrument cluster temporarily interrupted. Improved Hall-effect speed sensor, part no. 007 542 29 17, starting production date 06/88.
Cruise control/Tempomat switches off while driving, but can be newly stabilized without interrupting drive.	Install modified cruise control amplifier with new part number. Model 201.02 part no. 003 545 09 32 Model 201.122 part no. 002 545 82 32 Production breakpoint: Model 201.02 approx. 03/84 Model 201.122 approx. 10/83
Cruise control/Tempomat can be switched on only at a speed which is higher than 50 km/h. Vehicles with cruise control amplifier without reference resistor.	1. Check whether correct cruise control amplifier has been installed (refer to spare parts data). 2. On vehicles with grounding bridge, test bridge in connector for cruise control amplifier from connection 14 to 12 for interruption (refer to wiring diagrams 30/0101-580).
Cruise control/Tempomat can be switched on only after approx. 60 km/h. Models 124.125/130 up to approx. 07/85	Wrong combination auxiliary harness/cruise control amplifier Check whether socket (jack) 14 is included in connector of cruise control amplifier. Socket (jack) 14 is in place, install cruise control amplifier part no. 003 545 86 32. Socket (jack) 14 missing, install cruise control amplifier part no. 004 545 24 32.
Cruise control/Tempomat hunting throughout entire speed range by to 5 to 7 km/h. **Note** The complaint is clearly noticed, when the speed has been increased with pushbutton switch (tipping switch). After releasing switch, the vehicle continues to accelerate by approx. 5 to 7 km/h, the speed will drop again and the speed change will then consecutively show up.	Cruise control amplifier defective. Check harness for short circuit. If in order, renew cruise control actuator and subsequently cruise control amplifier.

Vehicle shaking (not only when driving downhill). This complaint may show up all the time or in given speed ranges only. Model 201 up to approx. 03/84	Install new sensor starting production date 03.84. The production date is shown on housing. Production breakpoint: 03/84
Vehicle shaking across entire speed range.	1. Check throttle control for easy operation and wear. 2. Check whether the correct cruise control amplifier or reference resistor has been installed (refer to spare parts data). 3. Check cabling for correct connections in plug connections for cruise control actuator and cruise control amplifier (refer to wiring diagrams 30.0101-580). 4. Check harness connection on speedometer sensor for good contacting and re-shape sockets (jacks), if required. 5. Renew cruise control actuator.
Vehicle shaking on level road up to approx. 65 km/h and when driving downhill. Model 201.024 with engine 102.961 standard version or 102.962 standard version without air conditioning system	Harness wrongly connected. Correct cabling as follows: 1. Pull connector from microswitch on throttle control. 2. Separate plug connection on throttle control and connect connector of plug connection to microswitch. 3. Connect pulled-off connector of microswitch to plug of plug connection. 4. Perform function test on road.

Vehicle shaking on level road up to approx. 65 km/h and when driving downhill. Model 124 with engine 102.982 up to approx. 09/88 or with 103.980 up to approx. 09/87 Model 201 with engine 102.962 (NV-RÜF/CAT), as well as vehicles with air conditioning system (standard) installed by manufacturer.	Decel shutoff is not switched off during operation of cruise control/Tempomat. A checkup can be made by pulling connector from microswitch on guide lever for decel shutoff. Shaking will then no longer occur. 1. Check plug connection of white lines X26 (jack 11) or X33. If the plug connection X26 (jack 11) or X33 is no longer plugged together, the line ends are at the following points:
Line end of engine harness	Line end of cruise control/Tempomat harness
124 to approx. 08/85 In fuse/relay box laced back approx. 150 mm from connector X26 on harness	Loose in fuse/relay box
124 starting approx. 09/85 In fuse/relay box in connector X26 jack 11	Loose in fuse/relay box
201 (standard) with air conditioning Laced back on harness behind battery	Loose in range of righthand front wall pillar
201 NV-RÜF/CAT In interior at the right, near front wall rubber grommet, laced back on harness	Loose in range of righthand front wall pillar
	2. If item 1 is in order, check white line between connector cruise control amplifier (jack 5) and connector CIS-E control unit (jack 6) for interruption. 3. If positions 1 and 2 are in order, renew CIS-E control unit.

Vehicle shaking in no-load condition when operating cruise control/Tempomat. Vehicles with Torsen differential	Excessive torsional clearance of differential, higher than the max. permissible 8 mm during power input of 100 Nm. Can be attained only with a standard differential. The Torsen differential is not authorized by DB.
Vehicle shaking under load during operation of cruise control/Tempomat between 2000 and 3000 rpm Model 124.133/193 and 126.125. (J)(USA) model year 1986 and 1987	Subsequently install damper with throttle, refer to 07.1-250.
Vehicle shaking in partial-load condition when operating cruise control/Tempomat Models 124.128/133/193/333/393 and 201.128 up to approx. 09/89	1. Check basic adjustment of regulating linkage. 2. Pull harness off microswitch for boost pressure cutout S27 or S27/7 on throttle control and take vehicle on test drive. If there is no more shaking, be sure to install a relay, refer to 30-576.
Vehicle jerking when ACC switch is actuated, (USA) vehicles only	Install modified speed sensor Production breakpoint: model year 1987, refer to 30-552.
Shaking during deceleration with Tempomat switched on. Models 124 and 201 with engines 102.96/982/985	This shaking can be associated with the switching on and off of the deceleration shut-off. To check this, the connector from the deceleration cut-off microswitch (S27/2) must be detached and the vehicle test driven on the overrun with the Tempomat switched on. If shaking does not occur, a relay can be installed which influences deceleration cut-off, refer to (30-577).

Vehicle runs approx. 10 km/h beyond fixed speed, additionally there may be shaking or shutting-off at higher speeds. Vehicle as of approx. 01/89 to 11/89	Install new control unit with grey gasket for reference resistor. Production breakpoint: approx. 11/89
Vehicle shaking when cruise control switch is held in "Decelerate" position. Vehicles with engine 102.96/98, 103 and 104.	Adjust connecting rod shorter by approx. 2 - 3 mm or 2 - 3 revolutions.
Cruise control actuator rattling in key position two.	1. Check connectors (plug connections) cruise control actuator/harness and cruise control amplifier/harness for good contact and re-shape jacks (sockets), if required. 2. Renew actuator.

Job No. of the job texts and work units and standard texts and flat rates . . . . . .

Special tool

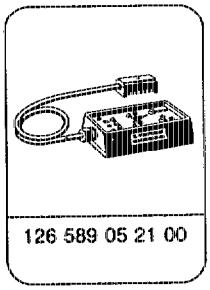

126 589 05 21 00

Prerequisite for testing

Prior to starting test with adapter, check battery voltage (> 11 V), stop lamps and speed indication for function. If required, recondition according to findings and also check cruise control/Tempomat prior to test for function by means of adapter.

Test cruise control/Tempomat with adapter only. If other testing and measuring instruments are used, the cruise control/Tempomat unit may be destroyed. During this test, the cruise control/Tempomat unit is tested with the exception of the cruise control amplifier. Faults can be discovered by means of the adapter only with the cruise control/Tempomat constantly without function. Complaints such as a temporary breakdown or poor control characteristics (e.g. shaking) cannot be tested with the adapter. In such cases, proceed according to notes for trouble diagnosis 30.0101-502.

If testing with the adapter indicates a faulty component , pay attention to good contact-making qualities prior to exchanging connectors, for instance, making sure that the jacks (sockets) are not widened. Widened jacks should be re-shaped. Then check rejected component once again.

Preparations for test

1 Expose cruise control amplifier (refer to 30.0101-565).

2 Pull 14-pole connector from amplifier.

3 Connect test adapter to 14-pole connector.

4 Switch on ignition. The LED displays of the symbols for battery, km/h and ground (if line according to wiring diagram is installed) will light up, provided no fault has been detected.

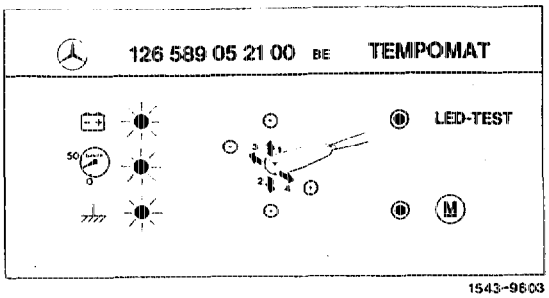

1543-9603

5 Push "LED-TEST" pushbutton switch of test adapter and check whether all LED displays are lighting up. If no LED display is lighting up, check connection of voltage supply and circuit connections of 14-pole connector (refer to wiring diagrams 30.0101-580).

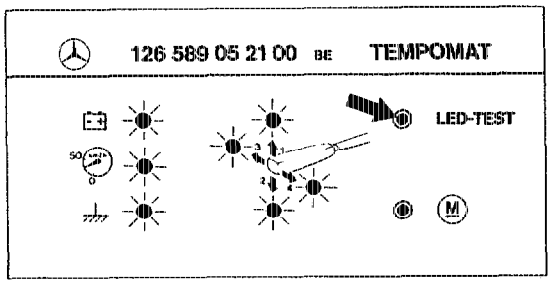

1543-9600

Test program survey

Test step	Actuation	Nominal indication	Possible cause of deviation from nominal indication
1		LED display lighting up.	Lines wrongly connected. Lines interrupted.
		LED display lighting up on models with grounding bridge.	Grounding bridge in 14-pole connector interrupted.
		LED display may light up.	Perform test step 6.
2	Actuate cruise control/Tempomat switch (position 1-4). 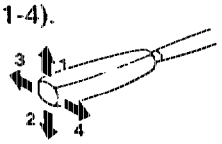	Respective LED display lighting up.	Lines interrupted. Switch defective.
3	Depress (M) pushbutton switch.	Regulating linkage moving uniformly to full throttle position and remains there.	Regulating linkage and accelerator pedal not moving: Connecting rod on cruise control actuator or on regulating linkage not connected. Lines interrupted or wrongly connected. Switch on clutch pedal defective. Actuator defective. Regulating linkage and accelerator pedal constantly moving to-and-fro: Poor contacting of plug connection harness/actuator harness. Throttle control and accelerator pedal not pulled to full throttle position: Check contacting of lines for actuator and amplifier (control unit). Actuator defective.

Test step	Actuation	Nominal indication	Possible cause of deviation from nominal indication
4	Depress (M) pushbutton Regulating linkage at full throttle position. Depress brake pedal. Then release pushbutton switch.	Regulating linkage not moving immediately into idle speed position when brake pedal is actuated.	Regulating linkage sluggish. Actuator defective.
5 Manual transmission only	Depress (M) pushbutton switch Regulating linkage at full throttle position. Depress clutch pedal. Then release pushbutton switch.	Regulating linkage moving immediately into idle speed position when clutch pedal is actuated.	Lines shorted. Switch on clutch pedal defective.
6	Move vehicle for at least 2 revolutions of wheels.	LED display flashing.	Lines interrupted or wrongly connected. Sensor defective.

If no fault has shown up on previous test:

1. Test blue line from connector cruise control actuator jack 5 to connector cruise control amplifier jack 10 for short to ground by means of ohmmeter.
2. On amplifiers (control units) with reference resistor, test reference resistor R 29 (30.0101-506).
3. Mount new cruise control amplifier (control unit) for test drive.

Testing

Check voltage supply.	
LED display lighting up	
Yes	No

Check lines for correct connection and passage.

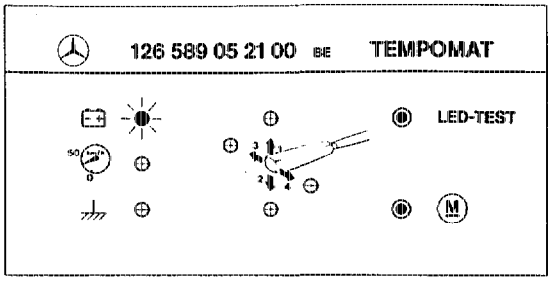

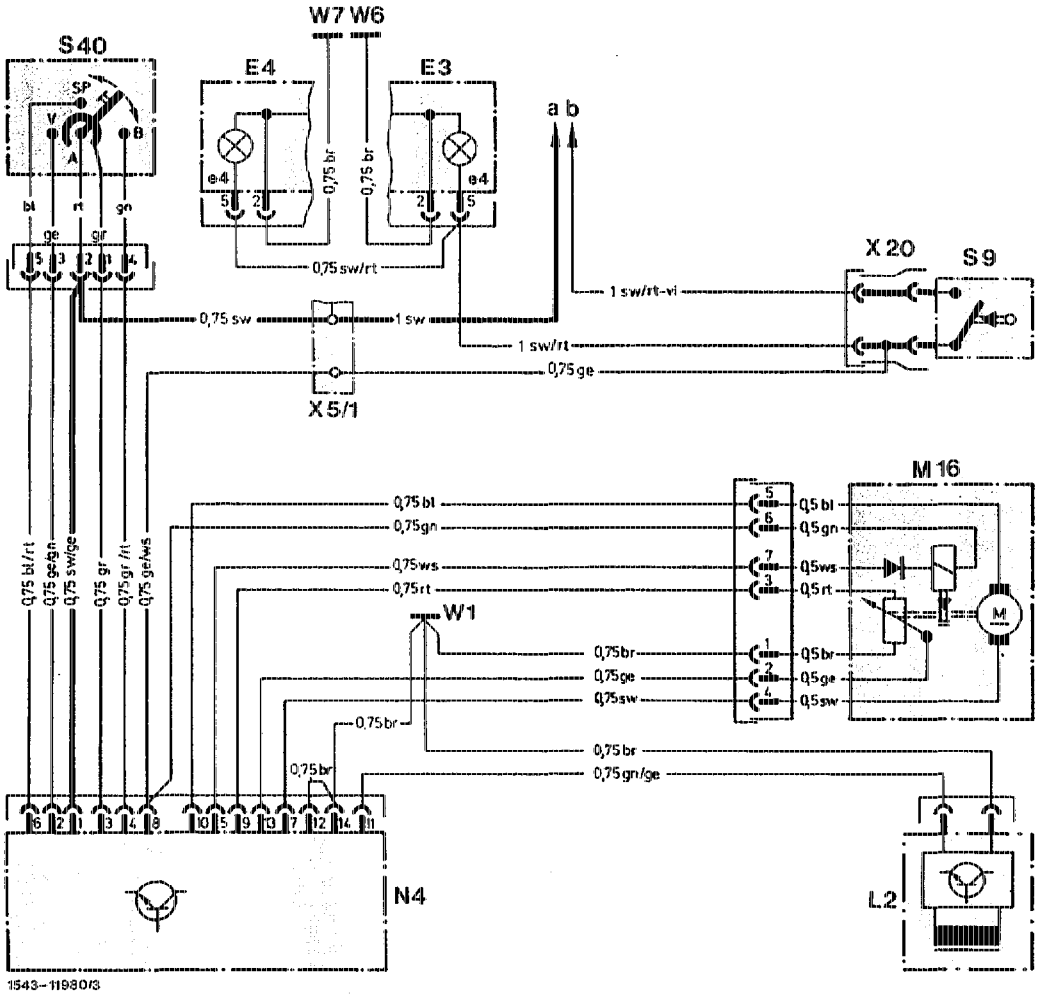

Example: Model 201.122 to approx. 08/85

On vehicles with grounding bridge test bridge in 14-pin connector.

LED display lights up

Yes	No

Repair grounding bridge in 14-pin connector.

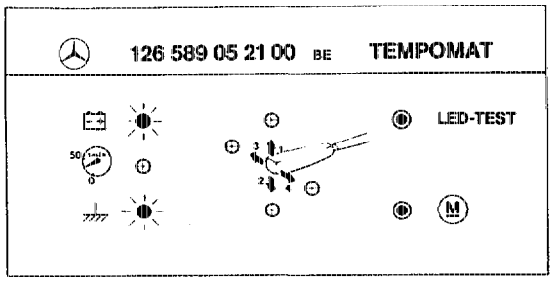

1543-9606

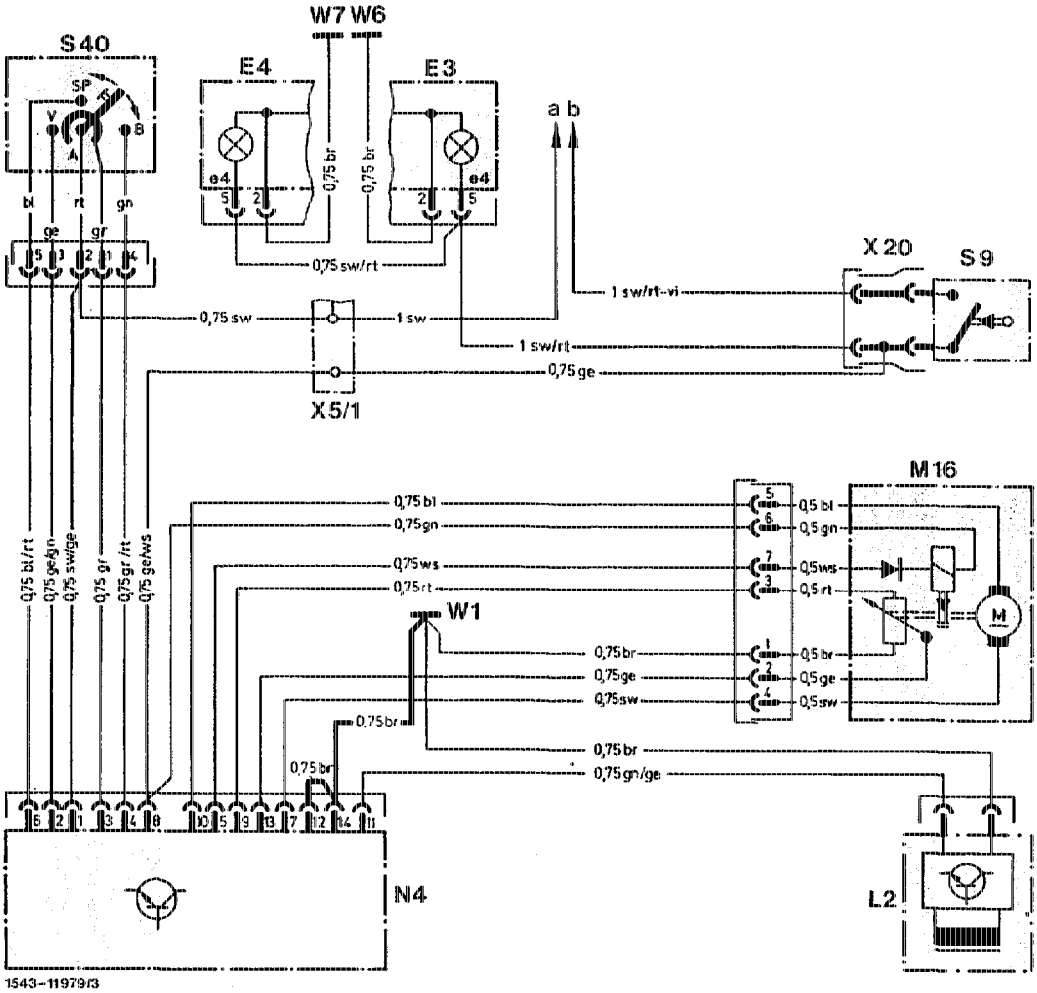

1543-11979/3

Example: Model 201.122 to approx. 08/85

RA 30.0101-504/6

Test harness and pushbutton switch.	
Switch position	LED display
Accelerate	1
Decelerate	2
Off	3
Memory	4
Respective LED display lighting up.	
Yes	No

Check lines for correct connection and passage.
Renew switch.

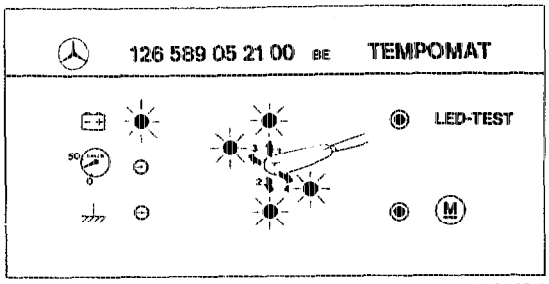

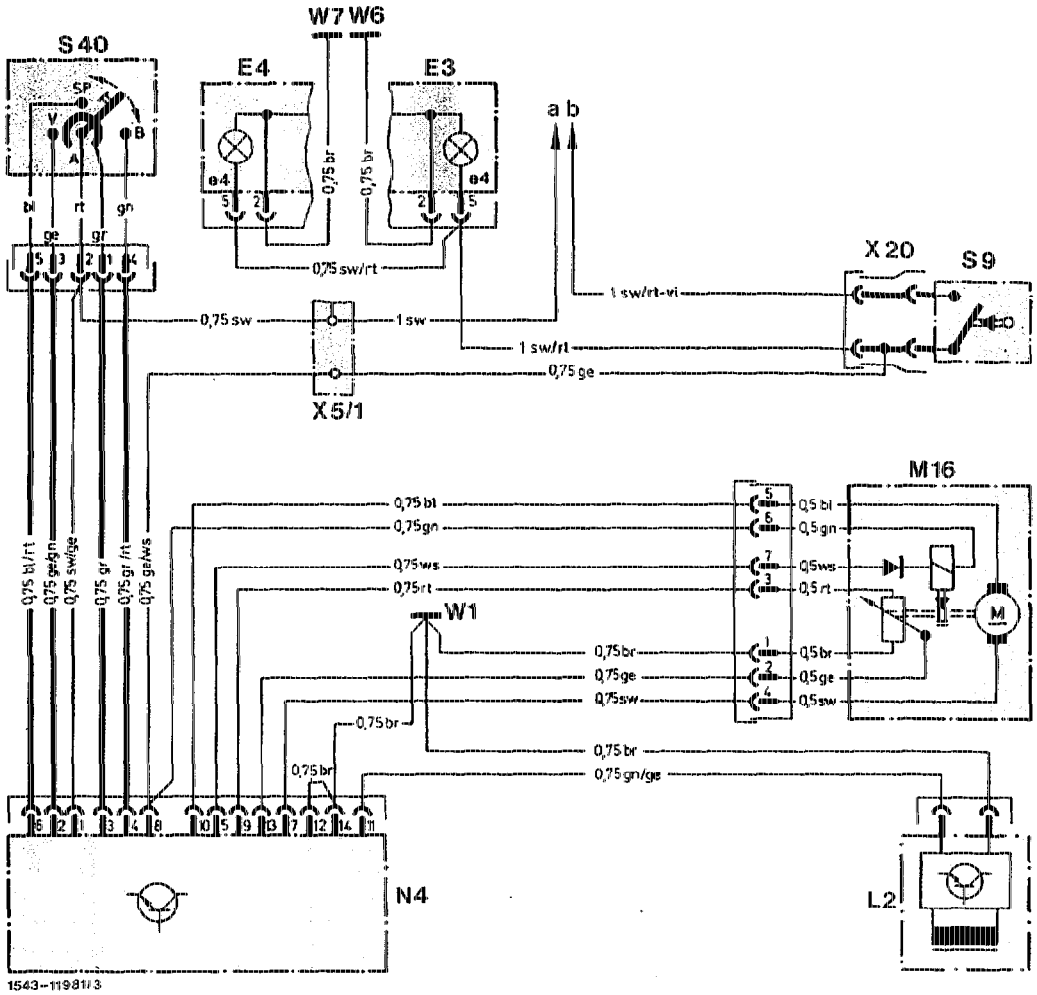

Example: Model 201.122 to approx. 08/85

Test cruise control actuator.
Depress pushbutton switch (M)

Throttle control and accelerator pedal are moving uniformly to full throttle position and remain there.

Yes	No

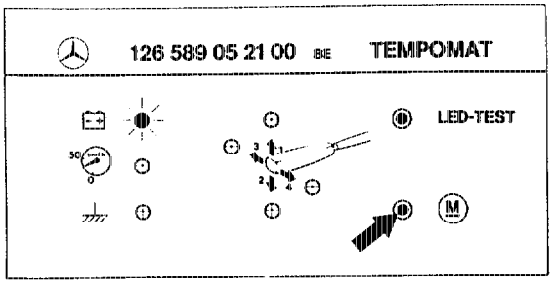

1543-9612

Throttle control and accelerator pedal not moving:

1. Check throttle control.
2. Check lines for correct connection or passage (30.0101-580).
3. On vehicles with manual transmission, check switch on clutch pedal for passage.
4. Renew cruise control actuator.

Throttle control and accelerator pedal constantly moving to-and-fro.

1. Check contacting of plug connection harness/actuator harness and harness/cruise control amplifier (control unit).
2. Renew cruise control actuator.

Throttle control and accelerator pedal are not pulled to full throttle position:

1. Test contacting of lines for actuator and for amplifier (control unit).
2. Renew actuator.

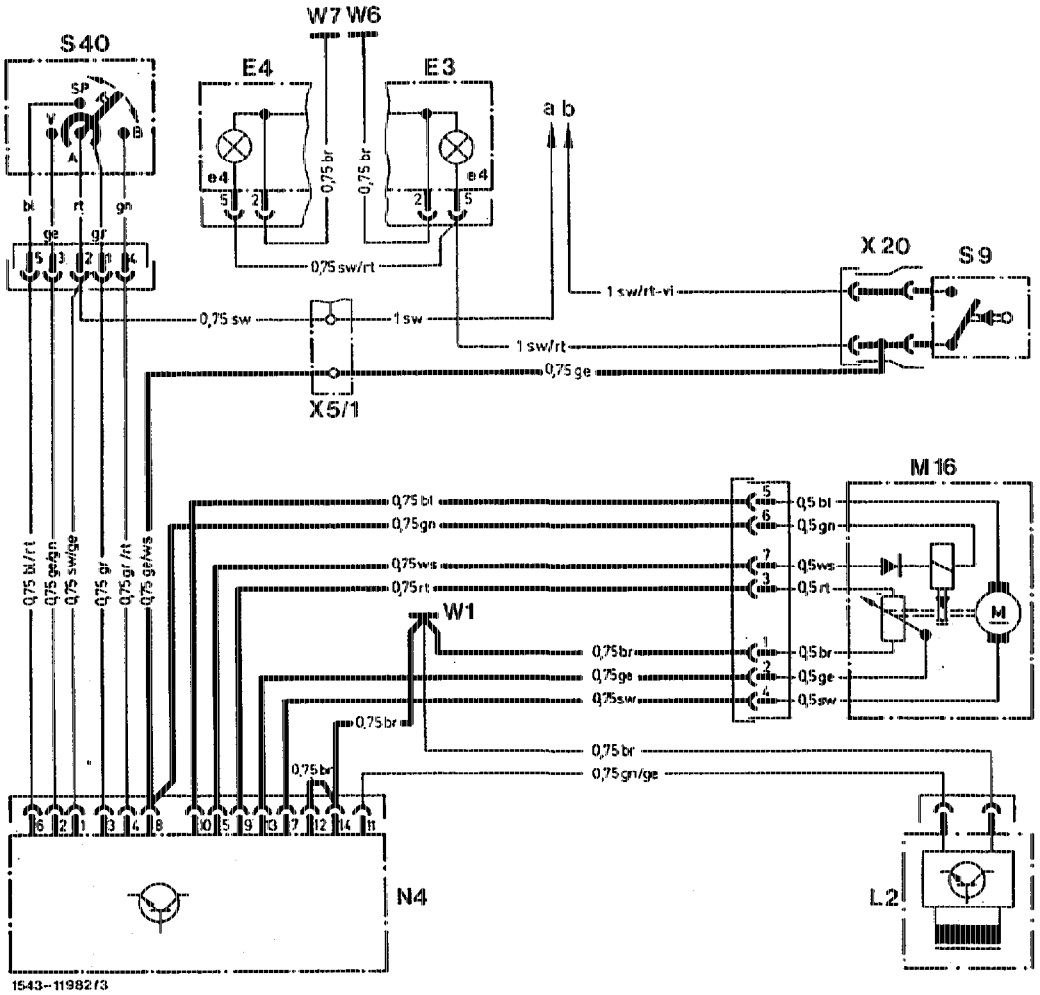

Example: Model 201.122 to approx. 08/85

Check cruise control/Tempomat cutout when braking.
Depress pushbutton (M)
Actuate throttle control and accelerator pedal at full throttle position of brake pedal.

Throttle control and accelerator pedal moving immediately into idle speed position. Then release pushbutton switch.

Yes	No

Check throttle control for easy operation.
Renew actuator.

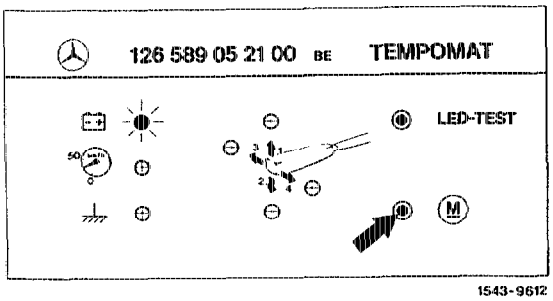

1543-9612

Check cruise control/Tempomat cutout during declutching (with manual transmission only).
Depress pushbutton switch (M)
Throttle control and accelerator pedal at full throttle position!
Actuate clutch pedal.

Throttle control and accelerator pedal are immediately moving into idle speed position. Then release pushbutton switch.

Yes	No

Lines are shorted.
Switch on clutch pedal defective.

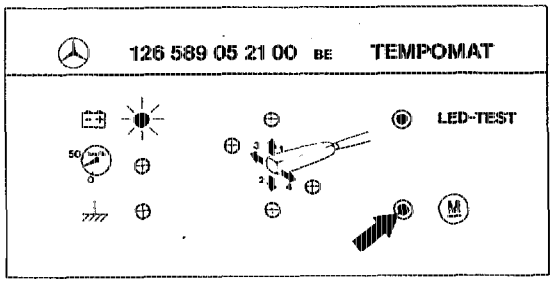

1543-9612

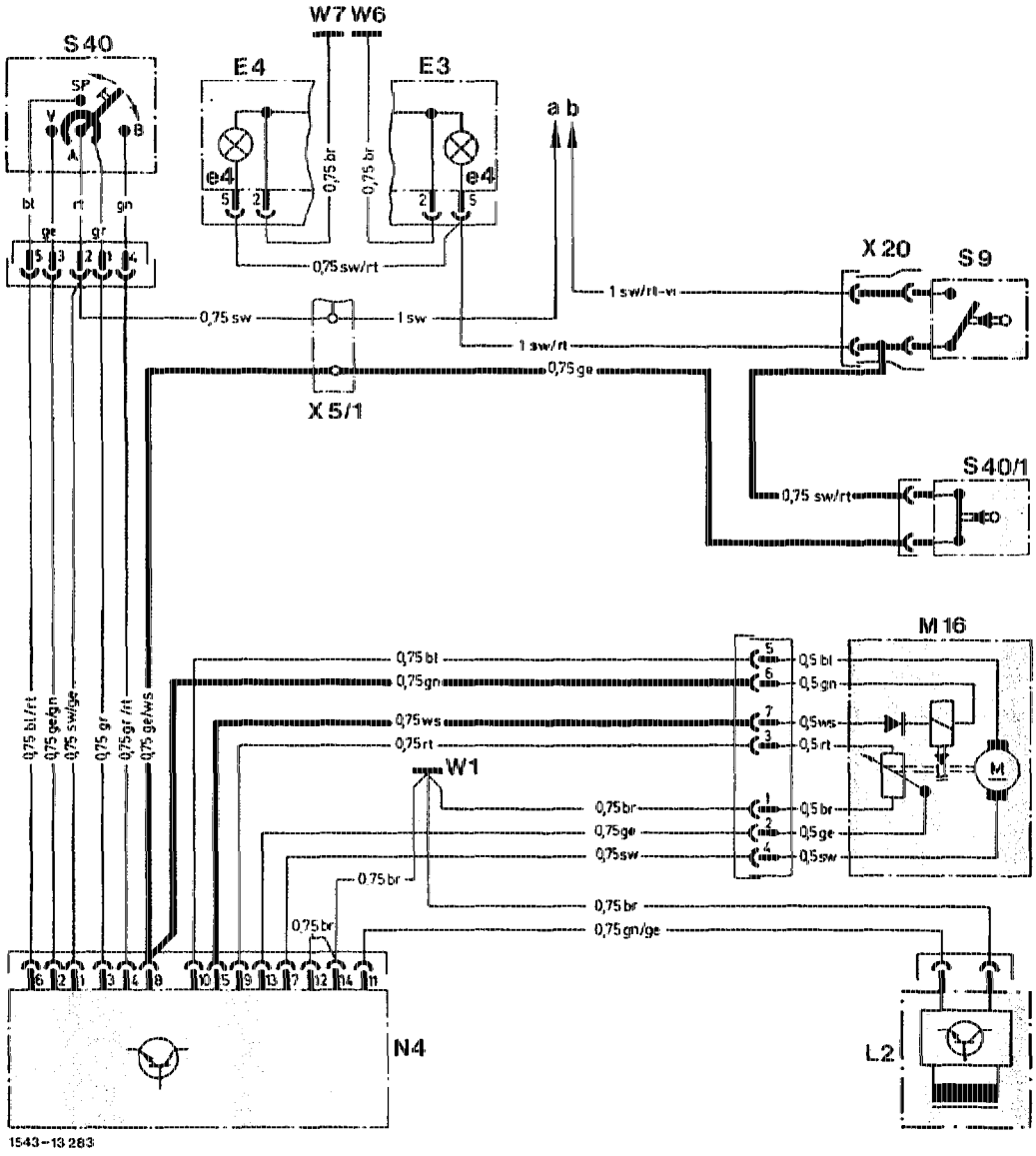

Example: Model 201.122 to approx. 08/85

Test harness and sensor on speedometer, speed indicator must be in order.
Move vehicle for at least 2 revolutions of wheels.

LED display flashing.

Yes	No

1. On vehicles with Hall-effect sensor (starting approx. 09/85) check voltage supply (terminal 15) of Hall-effect sensor on black line of 2-pole Hall- effect connector according to wiring diagram (30.0101-580).
2. Check lines according to wiring diagram for short circuit and interruption.
3. Renew sensor.

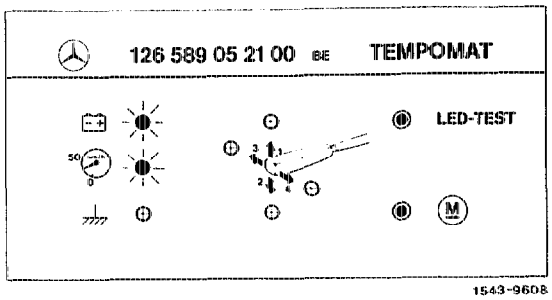

1543-9608

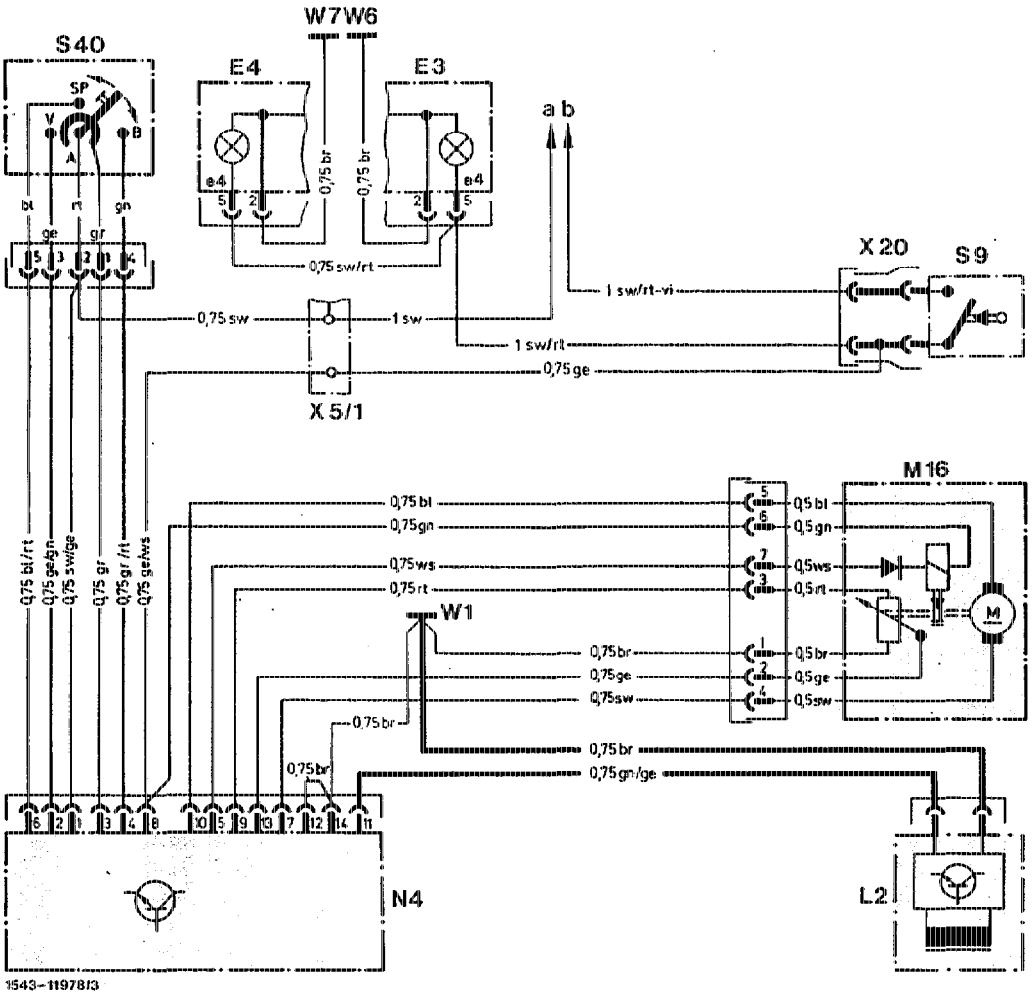

Example: Model 201.122 to approx. 08/85

Disconnect test adapter.

Test blue line from connector cruise control/Tempomat jack 5 to connector amplifier (control unit) jack 10 for short to ground.

Short to ground

No	Yes

Recondition or renew blue line.

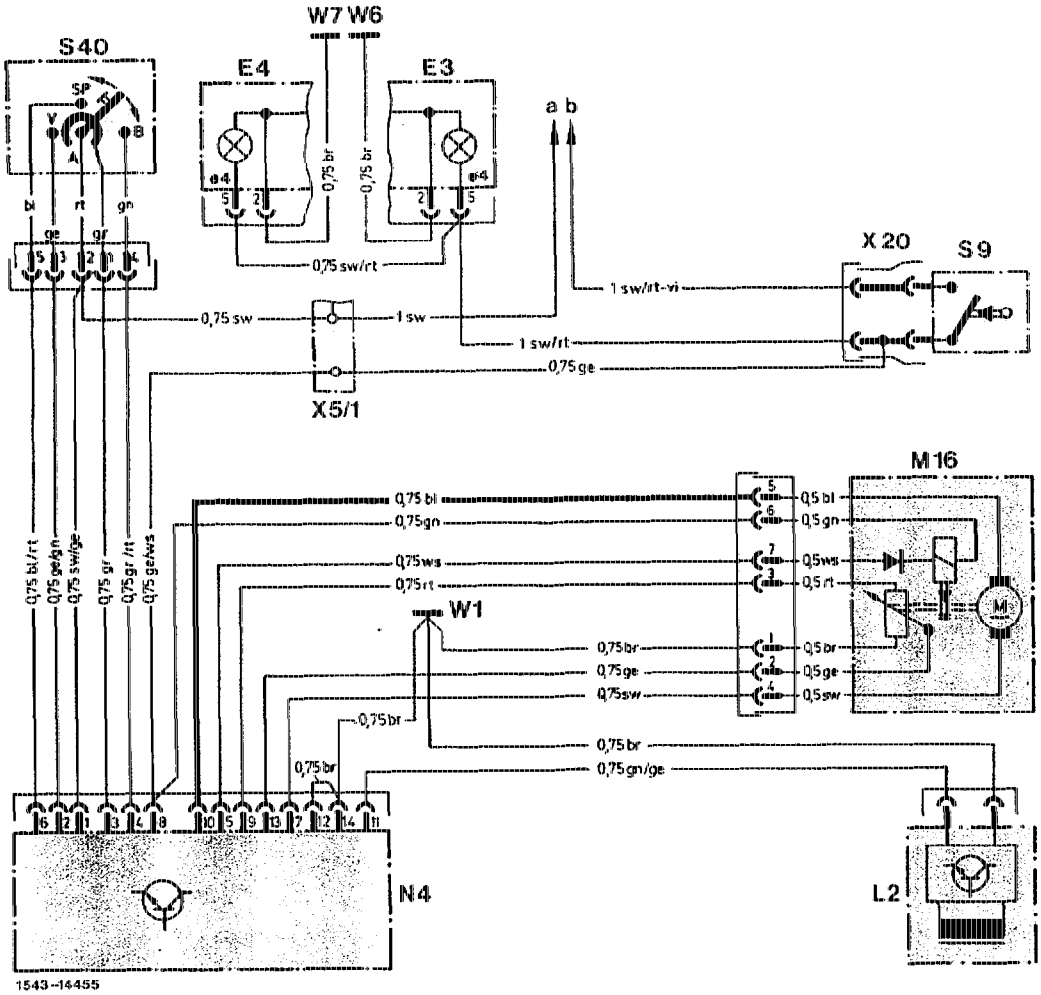

Example: Model 201.122 to approx. 08/85

On cruise control amplifiers (control units) with reference resistor, test reference resistor (R29) (30.0101-506).

Reference resistor in order.

Yes	No

Renew reference resistor (R29) (30.0101-566).

Renew cruise control amplifier.

End of test

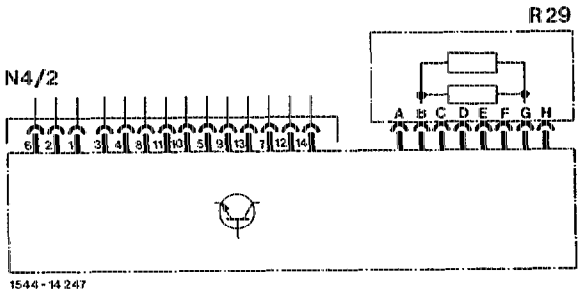

Job No. of the job texts and work units and standard texts and flat rates . . . . . .

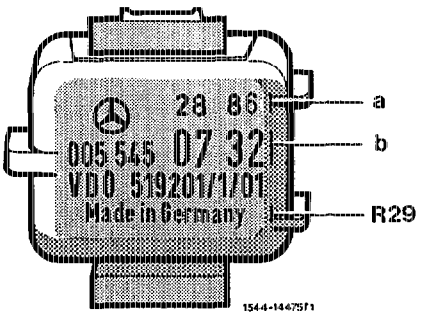

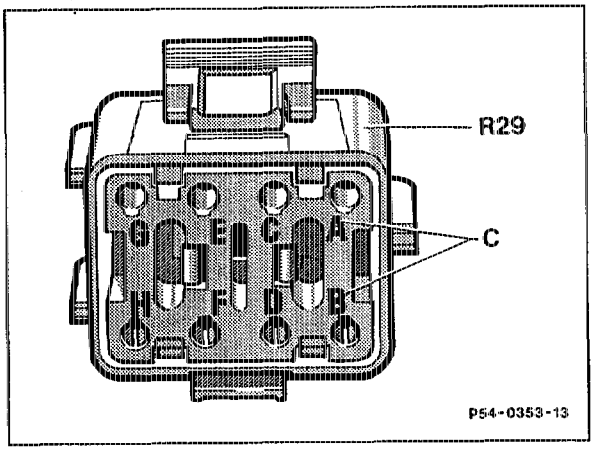

Tempomat/cruise control (TPM) reference resistor (R29)	remove, install (30-566). Production date (a). Part no. (b), jack designation (c). For several reference resistors there is no jack designation A-G. These reference resistors must be tested as shown on figure at the right.
Ohmmeter	connect (refer to table).
Resistance values	check (refer to table), replace Tempomat/cruise control reference resistor (R29) if values deviate.

Test table - resistance values

Part no.	Connection ohmmeter to jack designation						
	E–G kΩ	E–F kΩ	E–B kΩ	E–D Ω	D–H	D–C Ω	A–D Ω
005 545 07 32	501–521	26.2–27.2	1470–1530	∞	3.21–3.27 kΩ	< 10	∞
005 545 08 32	501–521	26.2–27.2	1470–1530	∞	1.98–2.02 kΩ	< 10	∞
005 545 09 32	684–712	39.4–41	1190–1230	∞	6.52–6.78 kΩ	< 10	∞
005 545 10 32	684–712	39.4–41	1190–1230	∞	8.28–8.62 kΩ	< 10	∞
005 545 11 32	667–695	52.4–55.2	1960–2040[1]	∞	2.88–3 kΩ	∞	< 10
005 545 42 32	98–102	19.6–20.4	592–616	∞	3.18–3.30 kΩ	∞	< 10
005 545 43 32	166–172	13–13.6	490–510	∞	1.37–1.43 kΩ	∞	< 10
005 545 44 32	667–695	48.9–50.9	1590–1650	∞	1.71–1.78 kΩ	∞	< 10
005 545 46 32	1660–1720	39.4–41	1470–1530	∞	< 10 Ω	∞	< 10
006 545 25 32	980–1020	39.4–41	1470–1530	∞	1.98–2.02 kΩ	< 10	∞
006 545 26 32	1470–1530	98–102	3570–3720[1]	∞	325.4–338.6 Ω	∞	< 10
006 545 61 32	980–1020	98–102	2940–3060[1]	∞	3.92–4.08 kΩ	∞	< 10
007 545 06 32	1080–1120	39.4–41	1190–1230	∞	1.92–2 Ω	∞	∞
007 545 12 32	684–712	39.4–41	1190–1230	∞	1.92–2 kΩ	∞	∞
007 545 13 32	501–521	35.8–37.2	1470–1530	∞	2.62–2.72 kΩ	∞	∞
007 545 39 32	465–485	39.4–41	1190–1230	∞	1.92–2 kΩ	∞	∞
007 545 40 32	1210–1270	98–102	2950–3070[1]	∞	1.3–1.36 kΩ	∞	< 10
007 545 50 32	684–712	39.4–41	1470–1530	∞	6.84–7.12 kΩ	< 10	∞
007 545 51 32	684–712	39.4–41	1470–1530	∞	8.91–9.27 kΩ	∞	∞
007 545 53 32	606–632	25.6–26.6	0.98–1.02	∞	3.93–4.09 kΩ	∞	∞
007 545 54 32	980–1032	48.9–50.9	1960–2040[1]	∞	< 10 Ω	∞	< 10
007 545 55 32	501–521	35.8–37.2	1470–1530	∞	3.41–3.55 kΩ	∞	< 10
007 545 56 32	489–509	65.2–67.8	2380–2480[1]	∞	3.41–3.55 kΩ	∞	< 10
545 007 76 32	607–631	39.4–41	1190–1230	∞	2.17–2.25 kΩ	< 10	< 10
009 545 15 32	684–712	39.4–41	1190–1230	∞	7.35–7.65 kΩ	∞	∞
010 545 29 32	684–712	39.4–41	1190–1230	∞	934–937 Ω	∞	∞
010 545 30 32	980–1020	25.6–26.5	1190–1230	∞	3.94–4.1 kΩ	< 10	< 10
012 545 87 32	2380–2480[1]	62.1–64.7	2500–2600[1]	∞	84.87–88.33 kΩ	< 10	< 10

[1] These values cannot be measured with SUN DMM-5.

Test table - resistance values

Part no.	Connection - ohmmeter to jack designation						
	E–G kΩ	E–F kΩ	E–B kΩ	E–D Ω	D–H	D–C Ω	A–D Ω
014 545 30 32	1705–1775	39.4–41	1509–1571	∞	84.86–88.34 kΩ	∞	< 10
014 545 80 32	2274–2366 [1]	52.9–61.6	2813-2927[1]	∞	2.38-2.47 kΩ	∞	∞
014 545 82 32	772-802	24.5-25.3	980-1020	∞	2.17-2.25 kΩ	∞	< 10
014 545 84 32	637-661	31.8-33	1402-1458	∞	1.51-1.57 kΩ	∞	< 10

[1] These values cannot be measured with SUN DMM-5.

Commercially available tools or testers, MB testers (refer to equipment manual)

Designation	e.g. Company, order no.
Multimeter	Fluke 23-DB, 83, 88 ITT Metrix MX 47, 50, 51, 52 SUN DMM-5

30–541 Removal and installation of cruise control actuator

Preceding work:
Starter removed (15-7100) engines 102.983/990.
Engine compartment lining removed (61-0105).

Operation no. of operation texts and work units or standard texts and flat rates

A. Engine 102

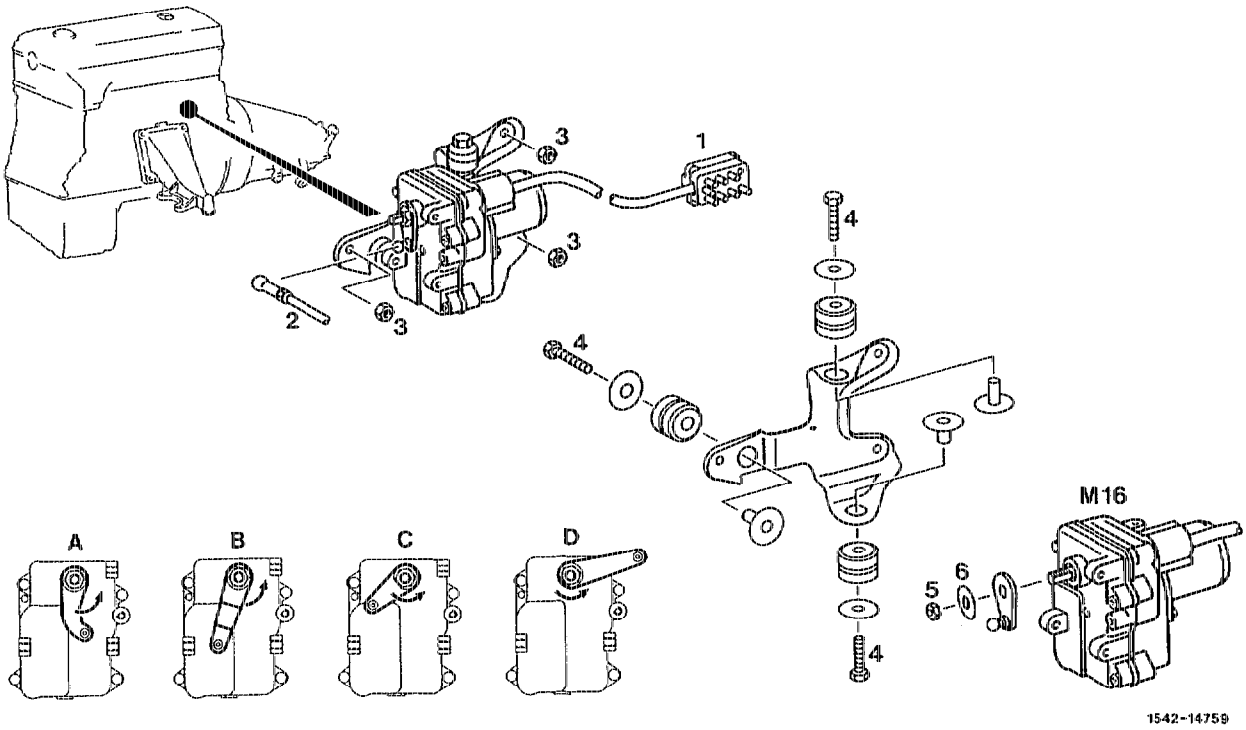

Battery	disconnect, connect.
Air cleaner (except engines with Stromberg carburetor)	remove, install (09/400).
Plug (1) on holder of diagnosis socket or on holder of ABS hydraulic unit at the connector	disconnect, connect.
Cable of Tempomat/cruise control (TPM) actuator (M16)	expose.

Connector rod (2) on Tempomat/cruise control (TPM) actuator (M16)	detach, attach.
Fixing nuts (3)	unscrew, screw on.
Tempomat/cruise control (TPM) actuator (M16) with holder	remove, install. On engines with injection system (except for 102.983/990) remove high-tension distributor cap and distributor rotor, loosen high-tension distributor, if required, and turn clockwise toward engine or remove. On 102.983/990 engines, extend Tempomat/cruise control (TPM) actuator (M16) first at the two rear studs and remove with the holder in downwards direction.
Fixing bolts (4) M6 x 28	unscrew, screw on. 12 Nm.
Lock washer (6)	unlock, lock.
Fixing nut (5)	unscrew, screw on. 10 Nm.
Lever (A-D)	remove. When installing, turn drive shaft from Tempomat/cruise control (TPM) actuator (M16) opposite to direction of arrow against stop, mount lever (A-D), A Stromberg carburetor, B 2E-E carburetor, C Injection engines; except 102.983/990, D Engines 102.983/990).
Connecting rod (2)	adjust (30-561).
Function test	perform on road.

B. Engines 103 and 104.980/981

Preceding work:
Air cleaner removed (09-400).
Engine compartment lining removed (61-0105).

Operation no. of operation texts and work units or standard texts and flat rates

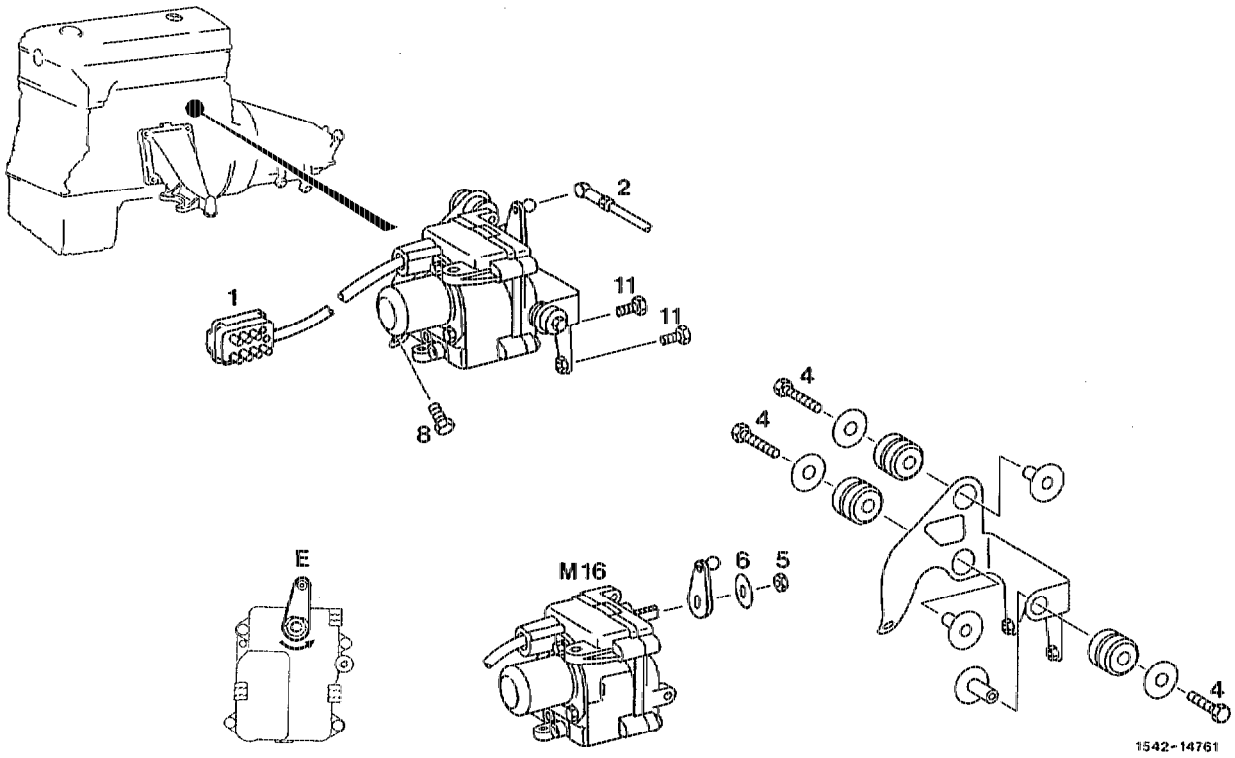

Battery	disconnect, connect.
Plug (1) on model 124 at holder of diagnosis socket, on model 129 on right-hand wheelhouse or on model 201 on holder of ABS hydraulic unit	disconnect, connect at the connector.
Cable of Tempomat/cruise control (TPM) actuator (M16)	expose.
Connecting rod (2) on Tempomat/cruise control (TPM) actuator (M16)	disengage, engage.
Fixing bolts (11) M6 x 12 and (8) M8 x 30	unscrew, screw on.

Tempomat/cruise control (TPM) actuator (M16) with holder	remove in downwards direction. On model 124 with refrigerant compressor, loosen lower fixing bolts for engine mount and lift engine.
Fixing bolts (4) M6 x 28	unscrew, screw on, 12 Nm.
Lock washer (6)	unlock, lock.
Fixing nut (5)	unscrew, screw on, 10 Nm.
Lever (E)	remove. When installing, turn drive shaft of Tempomat/cruise control (TPM) actuator (M16) opposite to direction of arrow against stop. Mount lever (E).
Connecting rod (2)	adjust (30-561).
Function test	perform on road.

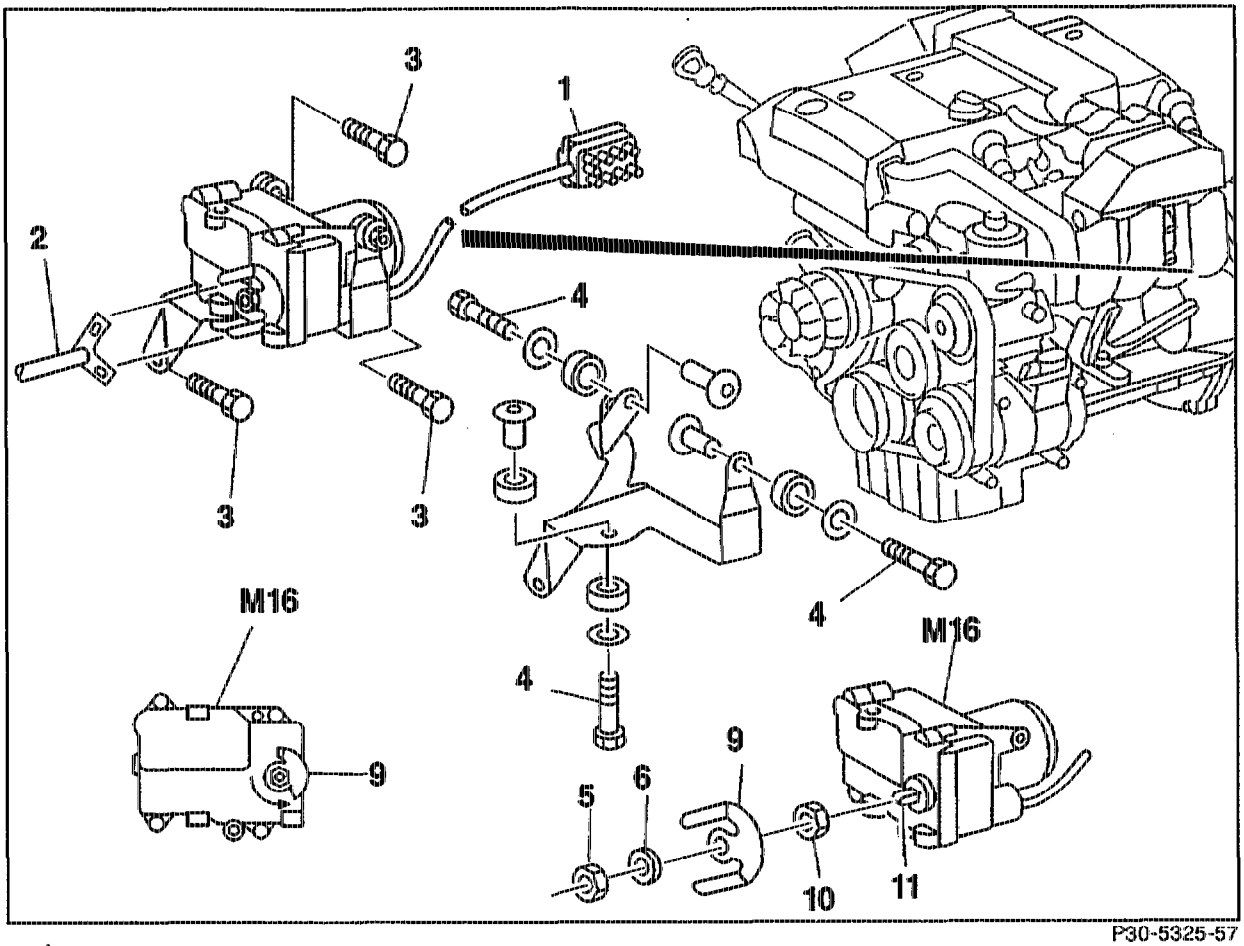

P30-5325-57

Battery ground cable	disconnect, connect.
Starter	remove, install (15-7100).
Plug (1) on holder of diagnosis socket	disconnect, connect.
Cable of Tempomat/cruise control (TPM) actuator (M16)	expose.
Fixing bolts (3) M6x15	unscrew, screw on.
Tempomat/cruise control (TPM) actuator (M16) with holder	remove in downwards direction.
Fixing bolts (4) M6x28	unscrew, screw on, 12 Nm.
Lock washer (6)	unlock, lock.

Fixing nut M8x1 (5) on the drive shaft (11) of the Tempomat/cruise control actuator (M16)	unscrew, screw on. 10 Nm.
Tab washer (6) and setting lever (9)	remove, install.

Note

When installing the setting lever (9), the drive shaft (11) of the Tempomat/cruise control actuator (M16) must be turned against the stop in the opposite direction to the arrow on the housing. The setting lever (9) is to be installed in this position.

Nut M8x1 (10) on the drive shaft (11) of the Tempomat/cruise control actuator (M16)	unscrew, screw on.

⚠

Only screw nut M8x1 (10) onto the drive shaft (11) until the threaded bolt of the drive shaft projects 8.5 mm.

Connecting rod	adjust (30-561).
Function test	perform on road.

D. Engine 119.960

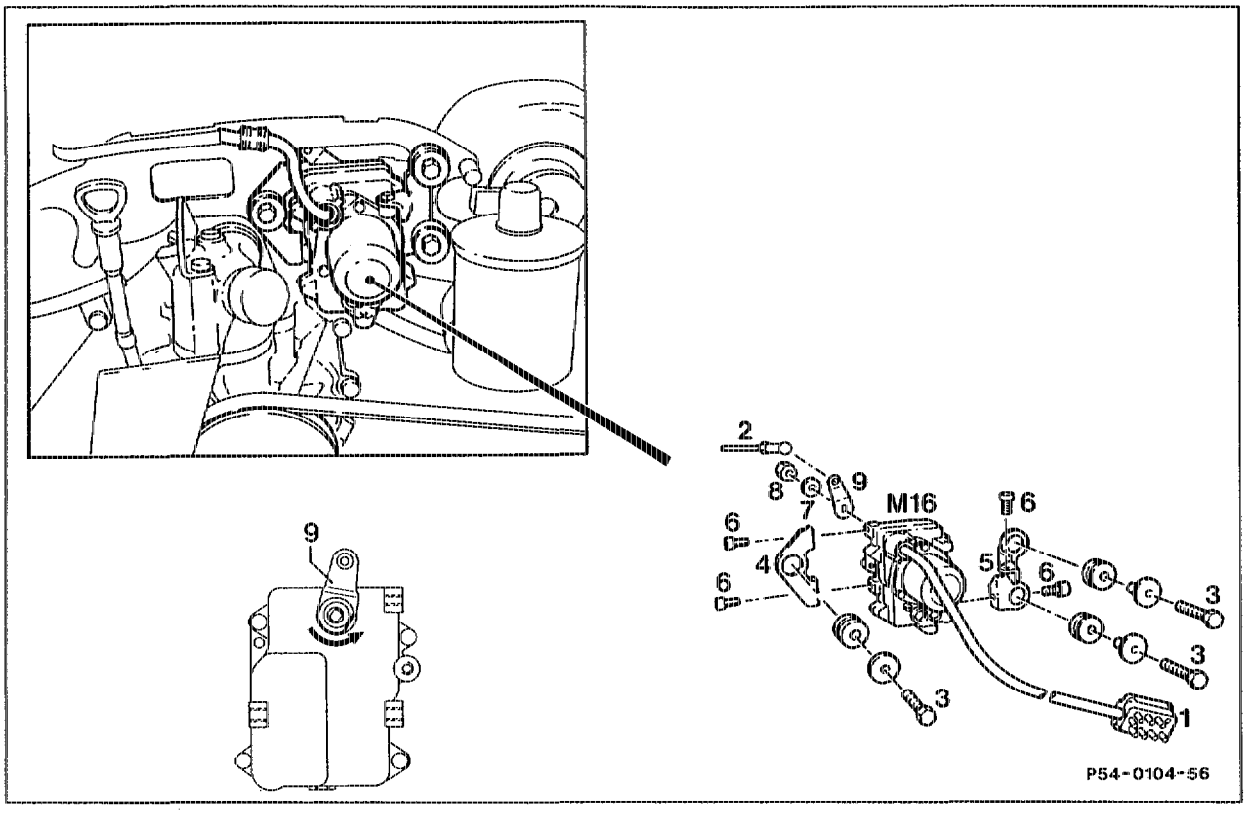

Battery	disconnect, connect.
Cover in front of air cleaner	remove, install.
Plug (1) on right-hand wheelhouse	disconnect, connect.
Connecting rod (2) on Tempomat/cruise control (TPM) actuator (M16)	disengage, engage.
Bolts (3)	unscrew, screw on.
Tempomat/cruise control (TPM) actuator (M16) with holder (4, 5)	remove, install.
Fixing bolts (6)	unscrew, screw on, 10 Nm.
Holders (4,5) from Tempomat/cruise control (TPM) actuator (M16)	remove, mount.
Lock washer (7)	unlock, lock.
Fixing nut (8)	unscrew, screw on, 10 Nm.
Lever (9)	remove. When installing, turn drive shaft of Tempomat/cruise control (TPM) actuator (M16) opposite to direction of arrow against stop. Mount lever (9).
Connecting rod (2)	adjust (30-561).
Function test	perform on road.

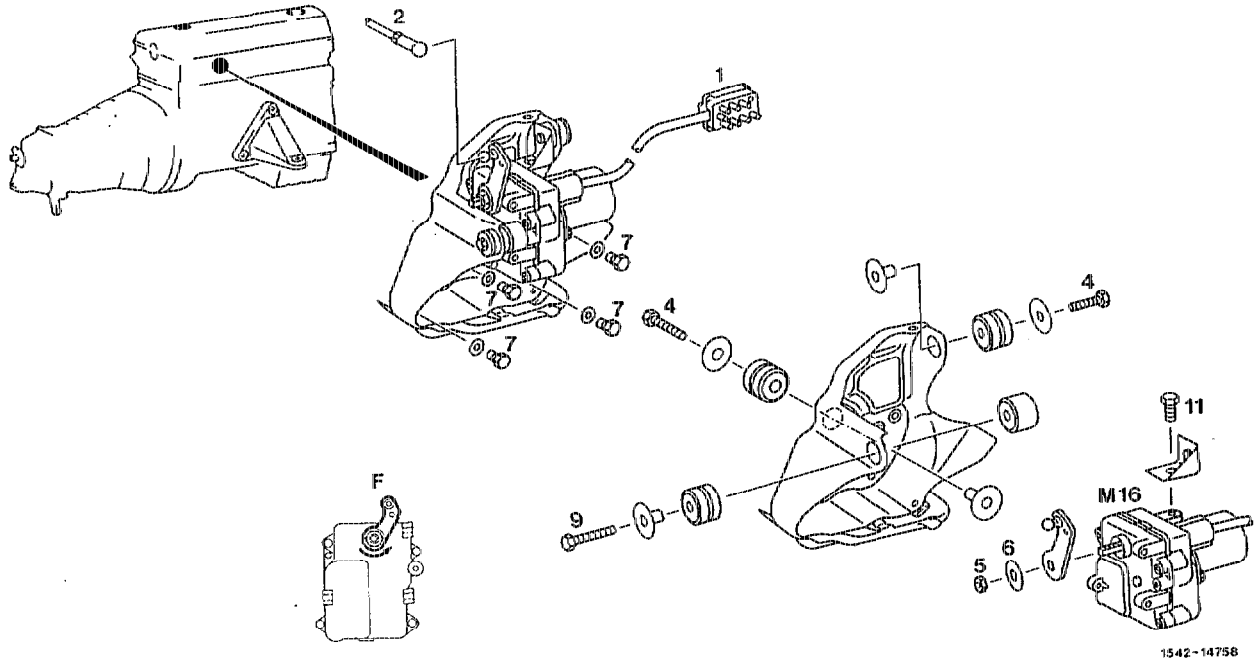

Battery	disconnect, connect.
Plug (1) between coolant expansion tank and windshield washer tank from connector	disconnect, connect.
Cable of Tempomat/cruise control (TPM) actuator (M16)	expose.
Connecting rod (2) on Tempomat/cruise control (TPM) actuator (M16)	disengage, engage.
Fixing bolts (11) for shield on holder (1st version only)	unscrew, screw on.
Fixing bolts (7) M6 x 18	unscrew, screw on.
Tempomat/cruise control (TPM) actuator (M16) with holder	remove, install.
Fixing bolts (4) M6 x 28	unscrew, screw on, 12 Nm.
Lock washer (6)	unlock, lock.
Fixing nut (5)	unscrew, screw on, 10 Nm.
Lever (F)	remove, replace rubber mount. When installing, turn drive shaft of Tempomat/cruise control (TPM) actuator (M16) opposite to direction of arrow against stop. Mount lever (F).
Connecting rod (2)	adjust (30-561).
Function test	perform on road.

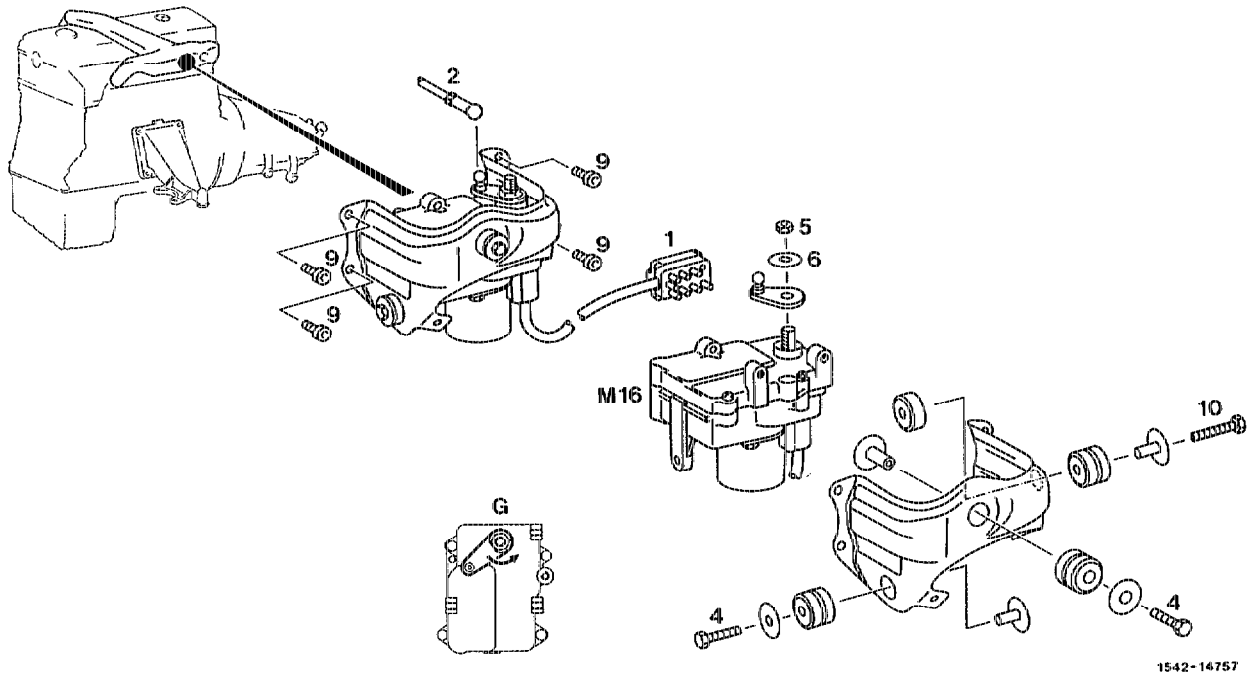

Battery	disconnect, connect.
Plug (1) on holder for ABS hydraulic unit from connector	disconnect, connect.
Cable of Tempomat/cruise control (TPM) actuator (M16)	expose.
Connecting rod (2) on Tempomat/cruise control (TPM) actuator (M16)	disengage, engage.
Fixing bolts (9) M6 x 18	unscrew, screw on.
Tempomat/cruise control (TPM) actuator (M16) with holder	remove, install.
Fixing bolts (4) M6 x 28	unscrew, screw on, 10 Nm.
Lock washer (6)	unlock, lock.
Fixing nut (5)	unscrew, screw on, 10 Nm.
Lever (G)	remove. When installing, turn drive shaft of Tempomat/cruise control (TPM) actuator (M16) opposite to direction of arrow against stop, mount lever (G).
Connecting rod (2)	adjust (30-561).
Function test	perform on road.

Preceding work:
Air cleaner removed (09-400) engine 603.96.

Operation no. of operation texts and work units or standard texts and flat rates

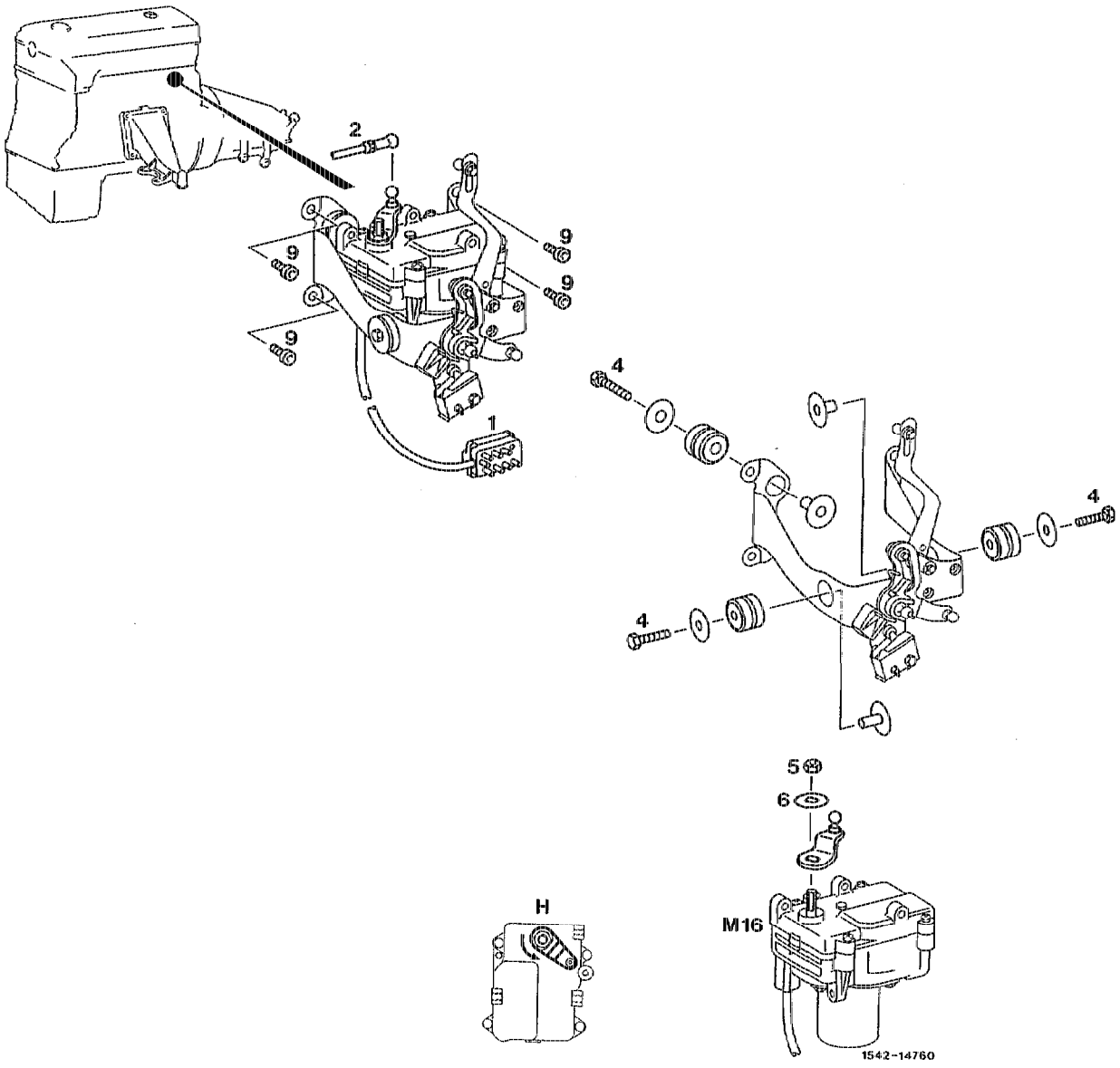

Battery	disconnect, connect.
Cover of left-hand wheelhouse on model 140	remove, install.
Plug (1) on holder of diagnosis socket, on model 140 on left of wheelhouse at the connector	disconnect, connect.
Cable of actuator (M16)	expose.

Throttle linkage and control pressure cable	disengage, engage.
Connecting rod (2) on Tempomat/cruise control (TPM) actuator (M16)	disengage, engage.
Fixing bolts (9)	unscrew, screw on.
Tempomat/cruise control (TPM) actuator (M16) with holder	remove, install.
Fixing bolts (4)	unscrew, screw on, 12 Nm.
Lock washer (6)	unlock, lock.
Fixing nut (5)	unscrew, screw on, 10 Nm.
Lever (H)	remove. When installing, turn drive shaft of Tempomat/cruise control (TPM) actuator (M16) opposite to direction of arrow against stop, mount lever (H).
Connecting rod (2)	adjust (30-561).
Function test	perform on road.

H. Engine 605

Preceding work:
Front engine encapsulation removed (94-5310)

Operation no. of operation texts and work units or standard texts and flat rates:

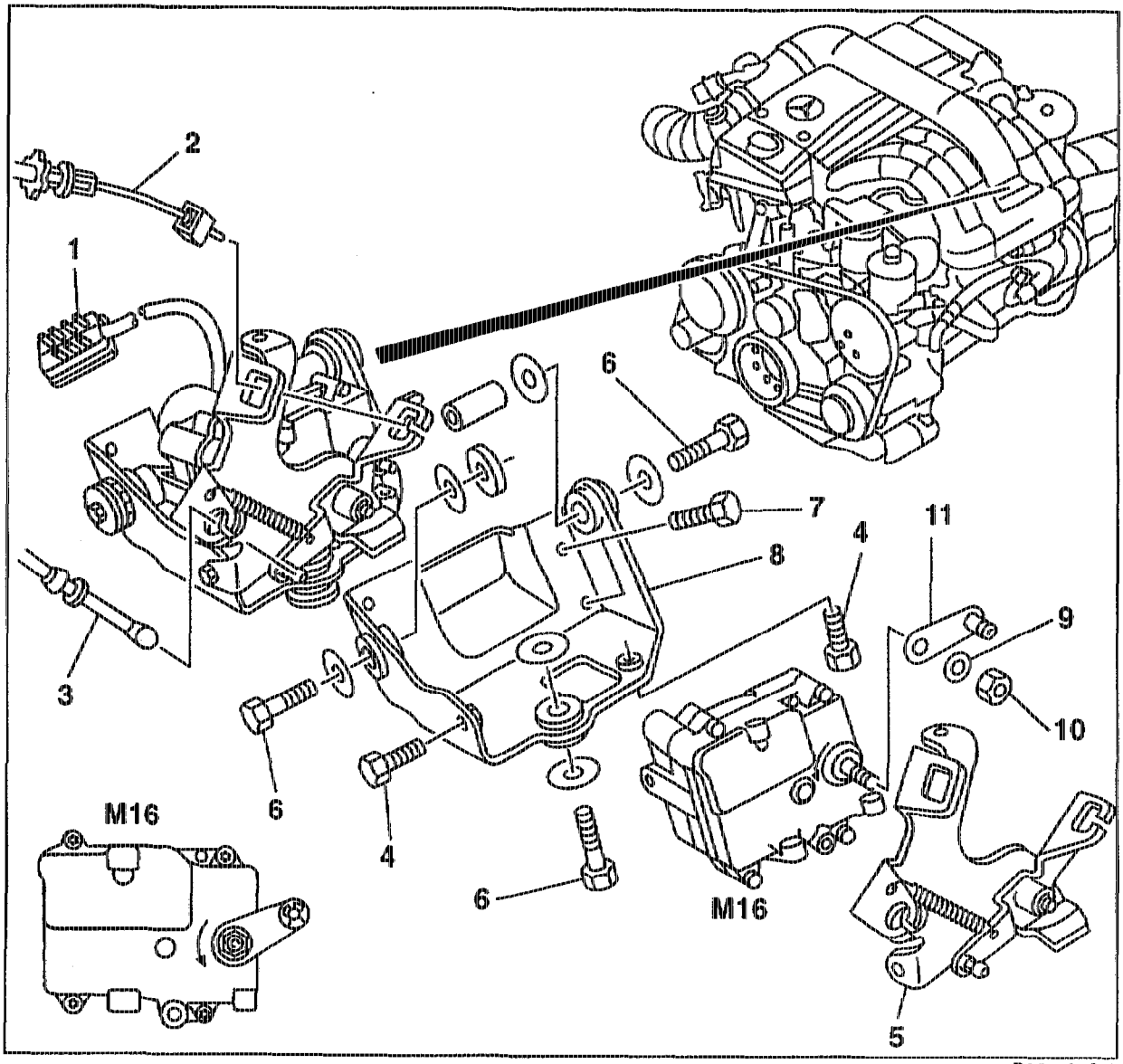

P30-5316-9

Ground cable at battery	disconnect, connect.
Windshield washer fluid reservoir	remove, install.
Plug (1) in left wheelhouse	disconnect, connect at coupling.
Cable of Tempomat/cruise control actuator (TPM, M16)	expose, secure.

Control cable (2) and throttle control cable (3)	disengage, engage.
Screws (4) M16x15	unscrew, screw on at holder (5) of transfer lever.
Holder (5)	remove, mount.
Screws (6) of Tempomat/cruise control actuator (TPM, M16) with washers and distance sleeves	unscrew, screw on.
Tempomat/cruise control actuator (TPM, M16)	remove, install.
Screws (7) M6x24 (4 off)	unscrew, screw in.
Holder (8)	remove, install.
Lock washer (9)	unlock, lock.
Nut (10)	unscrew, screw on.
Lever (11)	remove. When installing, turn drive shaft of Tempomat/cruise control actuator (TPM, M16) against the stop in the opposite direction to the arrow. Mount lever (11).
Control cable	adjust (30-561).
Function test	perform on road.

I. Engine 606

Preceding work:
Starter removed (15-7100)

Operation no. of operation texts and work units or standard texts and flat rates:

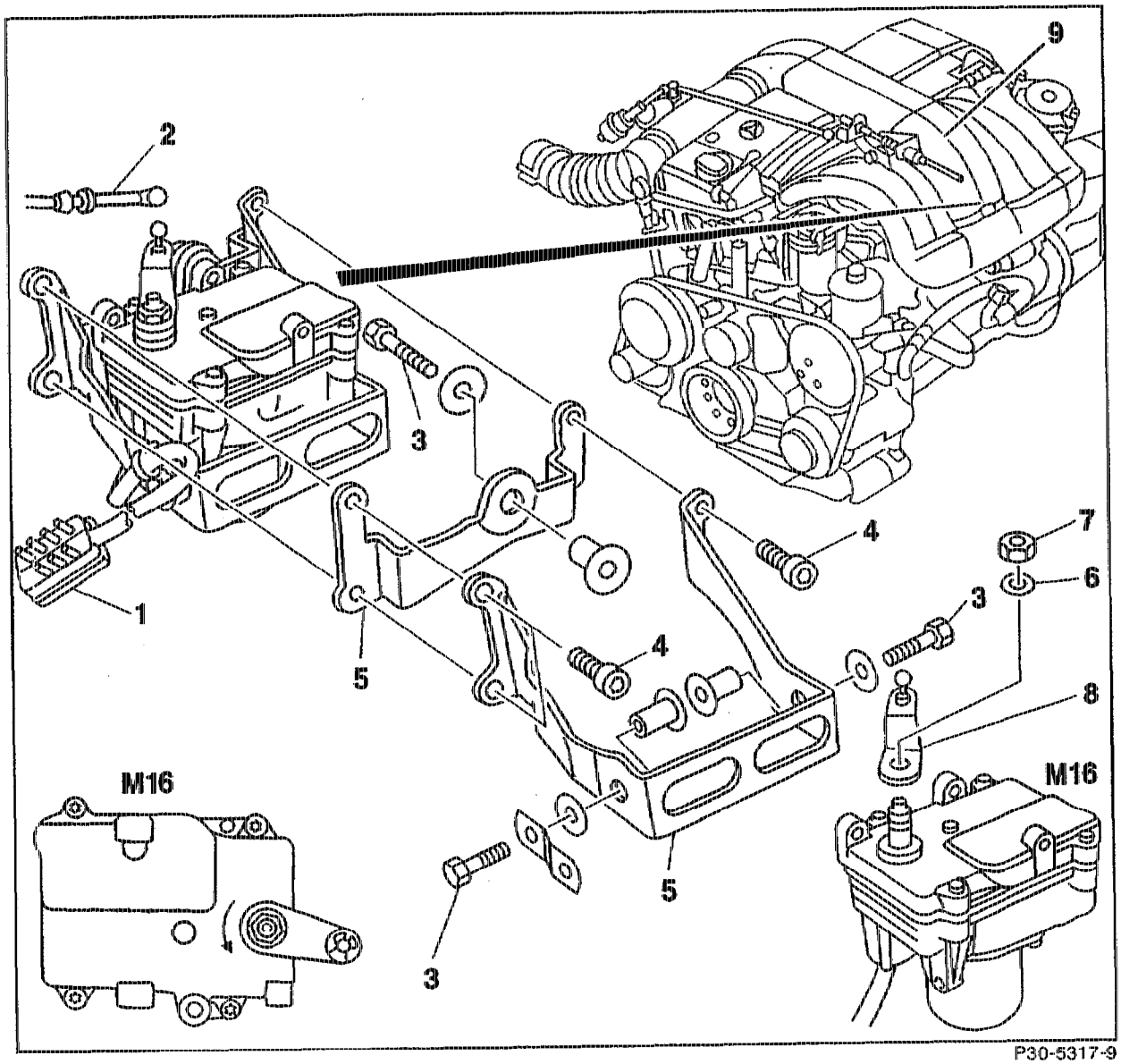

Windshield washer fluid reservoir	remove, install.
Plug (1) in left wheelhouse	disconnect, connect at coupling.
Cable of Tempomat/cruise control actuator (TPM) (M16)	expose, secure.
Resonance suction line (9)	loosen, fold backwards (14-1984).

Connecting rod (2) on Tempomat/cruise control actuator (TPM, M16)	disengage, engage.
Screws (3) M6x35 of Tempomat/cruise control actuator (TPM, M16) with washers and sleeves	unscrew, screw on.
Tempomat/cruise control actuator (TPM, M16)	lift out, install from above.
Hexagon socket bolts (4) M6x18 (4 off)	unscrew, screw in at two-piece holder (5).
Two-piece holder (5)	lift out, install from above.
Lock washer (6)	unlock, lock.
Nut (7)	unscrew, screw on.
Lever (8)	remove. When installing, turn drive shaft of Tempomat/cruise control actuator (TPM, M16) against the stop in the opposite direction to the arrow. Mount lever (8).
Connecting rod (2)	adjust (30-561).
Resonance suction line (9)	fold forwards, secure (14-1984).
Function test	perform on road.

30-545 Removal and installation of pushbutton switch

Preceding work:
Driver's side cover under instrument panel removed (68-150).

Operation no. of operation texts and work units or standard texts and flat rates:

A. Model 124 up to June 93, models 129 and 140 up to February 93, 2nd version model 201 as of approx. mid April 84

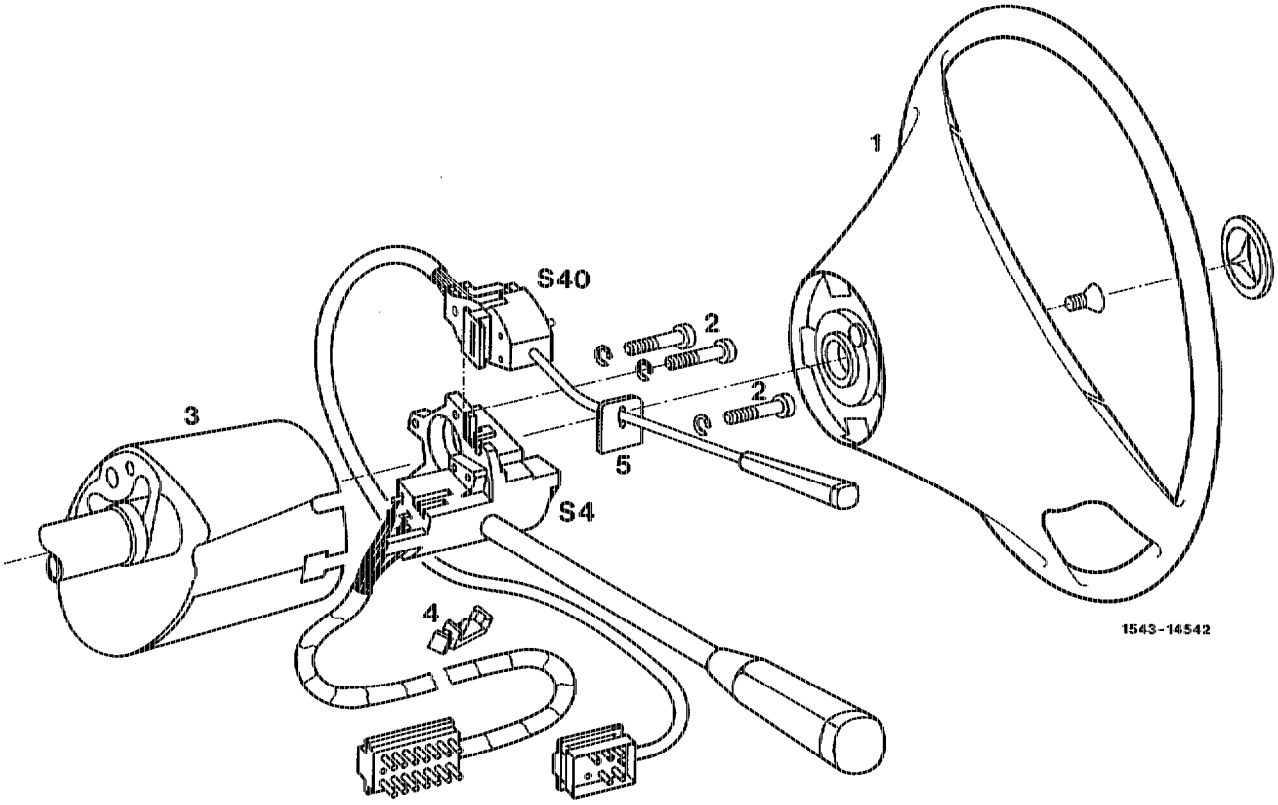

Ground cable at battery	disconnect, connect.

Vehicle with airbag

Airbag unit	remove, install (91-660). **Observe safety regulations.**
Steering wheel (1)	remove, install (46-0610).

Cover plate of steering column tube	remove, install.
Plug for Tempomat/cruise control switch (S40)	disconnect, connect.
Fixing bolts (2)	unscrew, screw on.
Combination switch (S4) with Tempomat/cruise control switch (S40)	withdraw approx. 5 cm.
Cable holder (4)	unclip, clip in (deleted on model 129).
Tempomat/cruise control switch (S40)	detach, install at combination switch (S4).
Tempomat/cruise control switch (S40)	remove, install whilst pulling up steering column lining (3) on model 201.
Rubber grommet (5) at Tempomat/cruise control switch (S40)	remove, install.
Function test	perform on road.

Model 140 only

Every time the battery is disconnected and connected, ... standardize power windows (82-0605).

Special tools

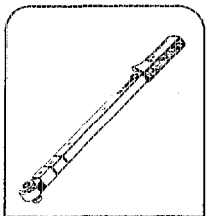

001 589 66 21 00
00

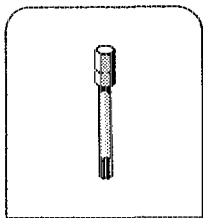

126 589 00 10 00
46

B. Model 124 as of July 93, 129 and 140 as of March 93

Preceding work:
Driver's side cover under instrument panel removed (68-150).

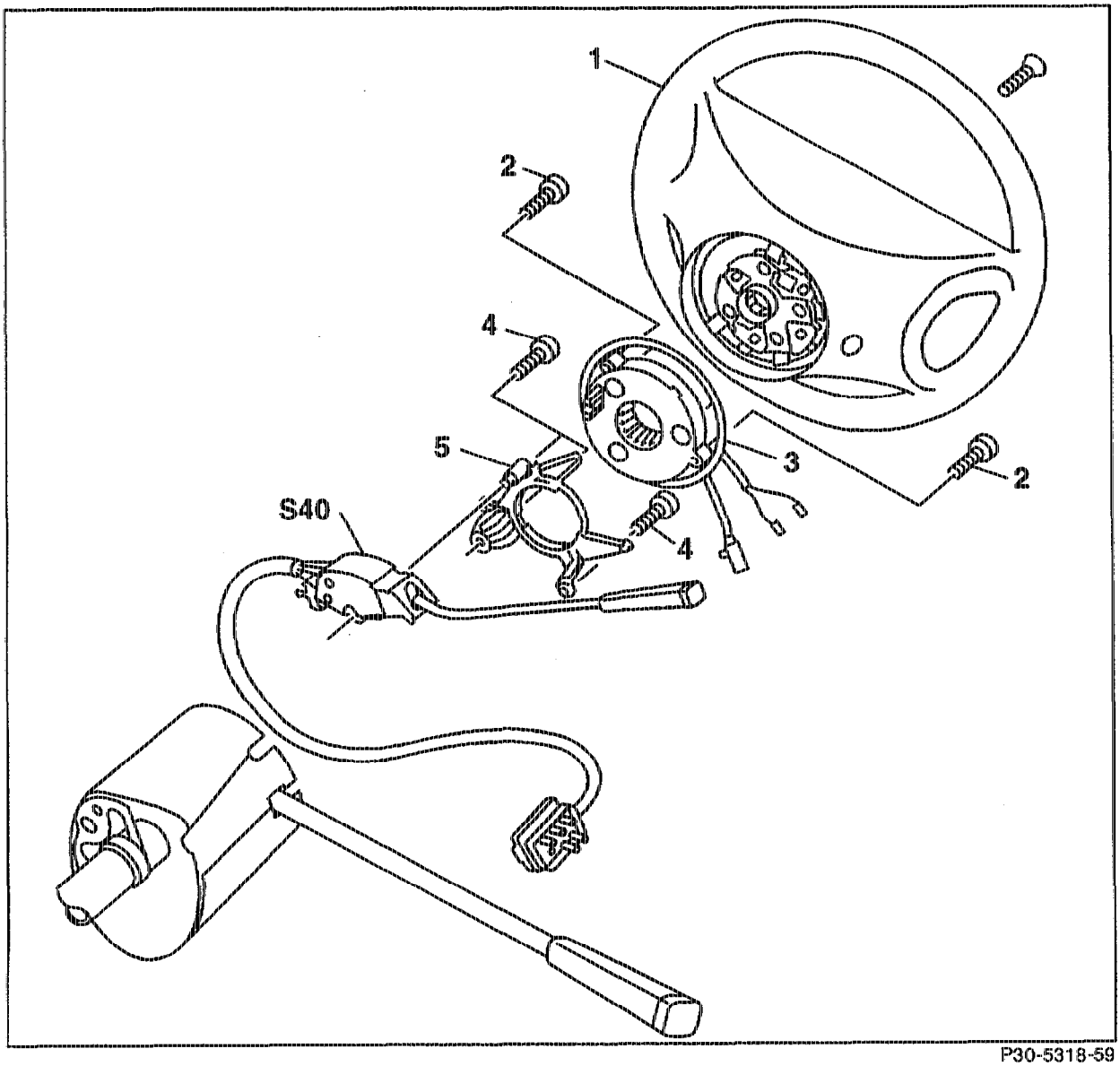

P30-5318-59

Airbag unit	remove, install (91–660).
	Observe safety regulations!
Steering wheel (1)	remove, install (46–0610).
Plug for Tempomat/cruise control pushbutton switch (S40)	disconnect, connect.
Screws (2) of contact spiral (3)	unscrew, screw in.
Contact spiral (3)	remove, mount.

Screws (4) of adapter (5)	unscrew, screw in.
Adapter (5)	remove, install.
Tempomat/cruise control pushbutton switch (S40)	remove, install.
Function test	perform on road.

Model 140 only

Every time the battery is disconnected and connected, ...	standardize power windows (82-0605).

Special tools

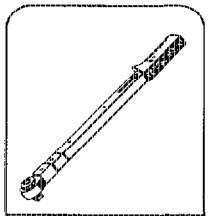

001 589 66 21 00
00

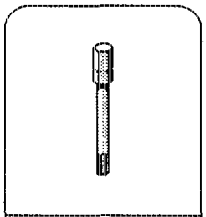

126 589 00 10 00
46

C. 1st version model 201 up to approx. mid April 1984

Preceding work:
Cover on left or right below instrument panel removed (68-150)

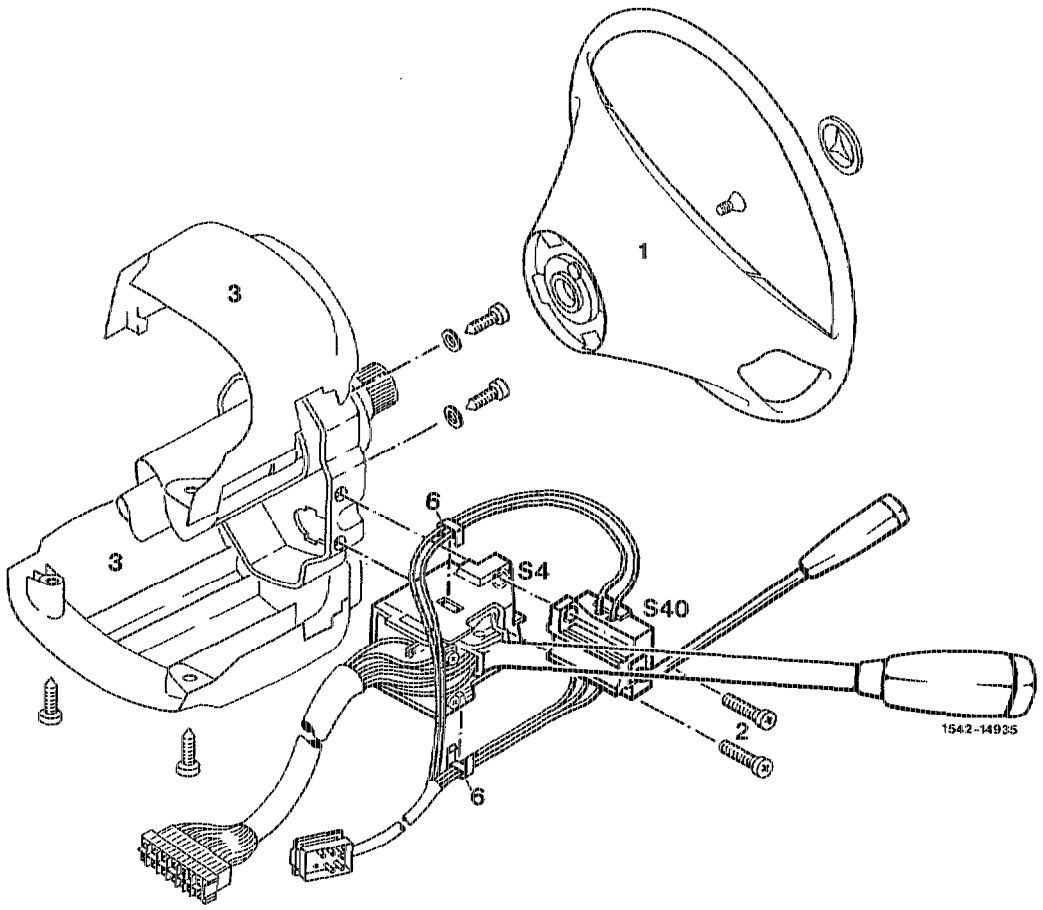

Battery	disconnect, connect.
Plug for Tempomat/cruise control switch (S40)	disconnect, connect.
Steering wheel (1)	remove, install (46-0610).
Steering column lining (3)	remove, install.
Clips (6) on combination switch (S4)	unclip, clip in.
Fixing bolts (2)	unscrew, screw on.
Tempomat/cruise control switch (S40)	remove, install.
Function check	perform on road.

30-550 Removal and installation of sensor (models 124, 201)

Preceding work:
Instrument cluster removed (54-250).

Operation no. of the operation texts and work units and standard texts and flat rates . . . . . .

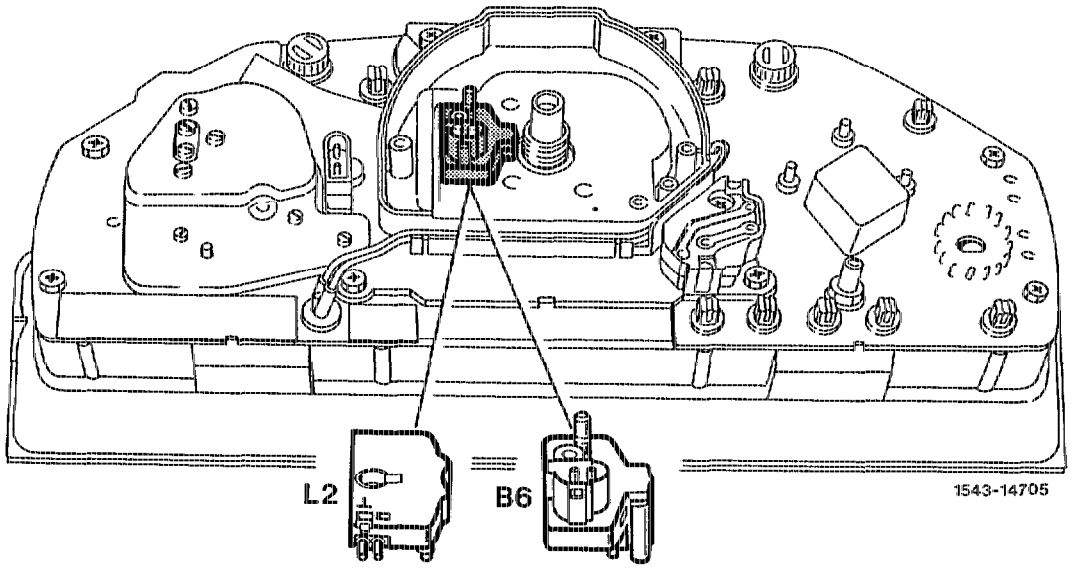

Fastening screw of sensor (B6 or L2)	unscrew, screw on.
Sensor (B6 or L2)	remove, install.
Function test	perform on road.

Note
Hall-effect speed sensor (B6) on model 124 and model 201 starting approx. 09/85.
Road speed sensor (L2) on model 201 up to approx. 08/85.

Operation no. of the operation texts and work units and standard texts and flat rates:

A. General information

For proper operation of Tempomat/cruise control and correct adjustment of Tempomat/cruise control connecting rod or control cable, the following points must be observed:

- Check for easy operation and wear of regulating shafts, regulating lever, guide lever, ball sockets, Bowden wire and regulating linkage. Renew worn out parts.
- Clean dirty and hard-to-move regulating assemblies.
- Lubricate all bearing points of all regulating shafts, regulating levers, joints of regulating linkage and wire lines with an oil can.
- On (USA) version vehicles only the following hydraulic fluids may be used:

  Castrol DB Hydraulik Fluid
  Mobil Aero HFA
  Shell Aero Fluid 4
- During assembly jobs, use protective anti-corrosion grease, part No. 000 989 87 15 10.

B. Engine 102 with Stromberg carburetor

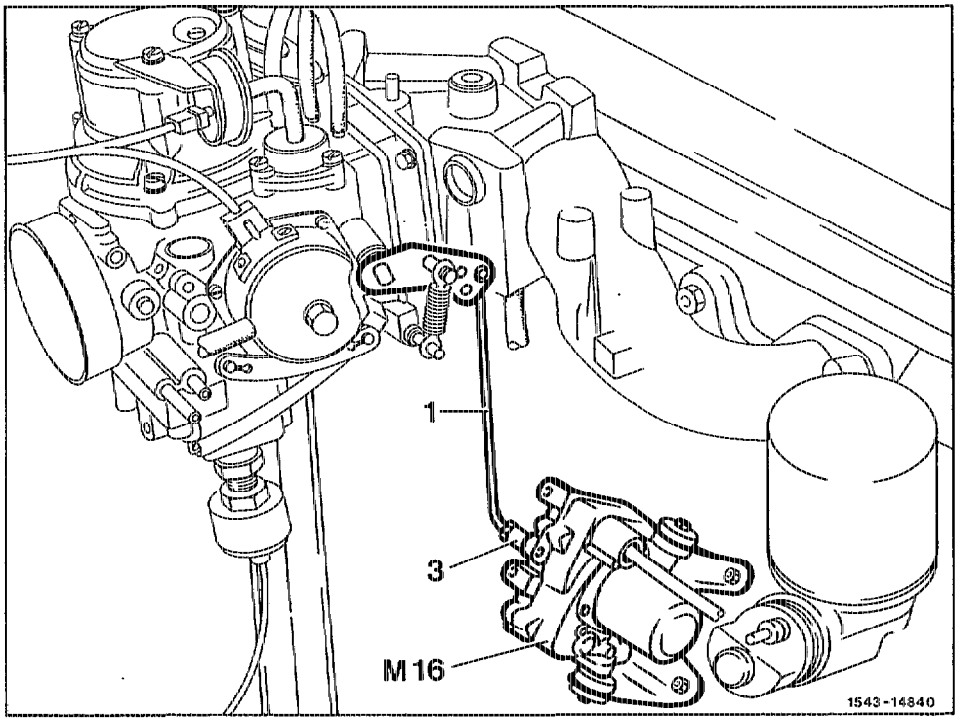

Engine	bring to operating temperature.
Engine	allow to idle.
Ball socket (3)	unlock, press off and secure.
Connecting rod (1)	detach, attach at Tempomat/cruise control (TPM) actuator (M16).
Lever of Tempomat/cruise control (TPM) actuator (M16)	push toward engine in idling speed position.
Connecting rod (1)	adjust approx. 1 mm or 1 revolution shorter.

C. Engine 102 with 2E-E carburetor

Preceding work:
Air cleaner removed (09-400).

Operation no. of operation texts and work units or standard texts and flat rates

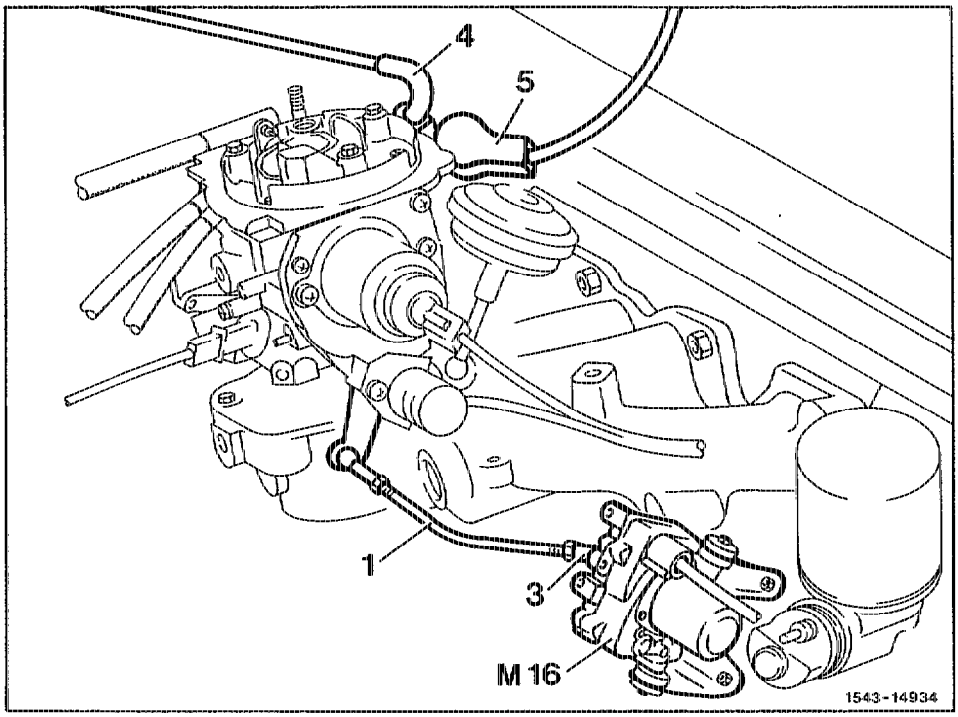

Plug from throttle valve actuator (5)	disconnect, connect.
Throttle valve actuator connection 2	contact to ground. (Using electrical connection set 201 589 00 99 00).
Throttle valve actuator connection 8	contact to battery positive. (Using electrical connection set 201 589 00 99 00).
Throttle valve actuator	apply with vacuum until plunger is fully retracted then switch off voltage (valve coils are not constant current-proof). (Using hand vacuum pump 001 589 73 21 00).
Ball socket (3)	unlock, lock.
Connecting rod (1)	disengage, engage at Tempomat/cruise control (TPM) actuator (M16).

Lever of Tempomat/cruise control (TPM) actuator (M16) ..... push towards engine in idling speed position.

Connecting rod (1) ..... adjust approx. 1 mm or 1 revolution shorter.

Special tools

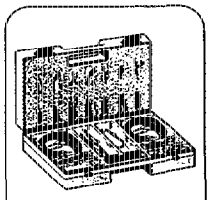

201 589 00 99 00
15 54

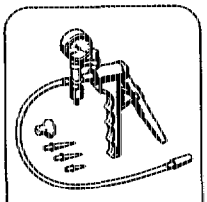

001 589 73 21 00
00

D. Engine 102 with injection system, except engines 102.983/990

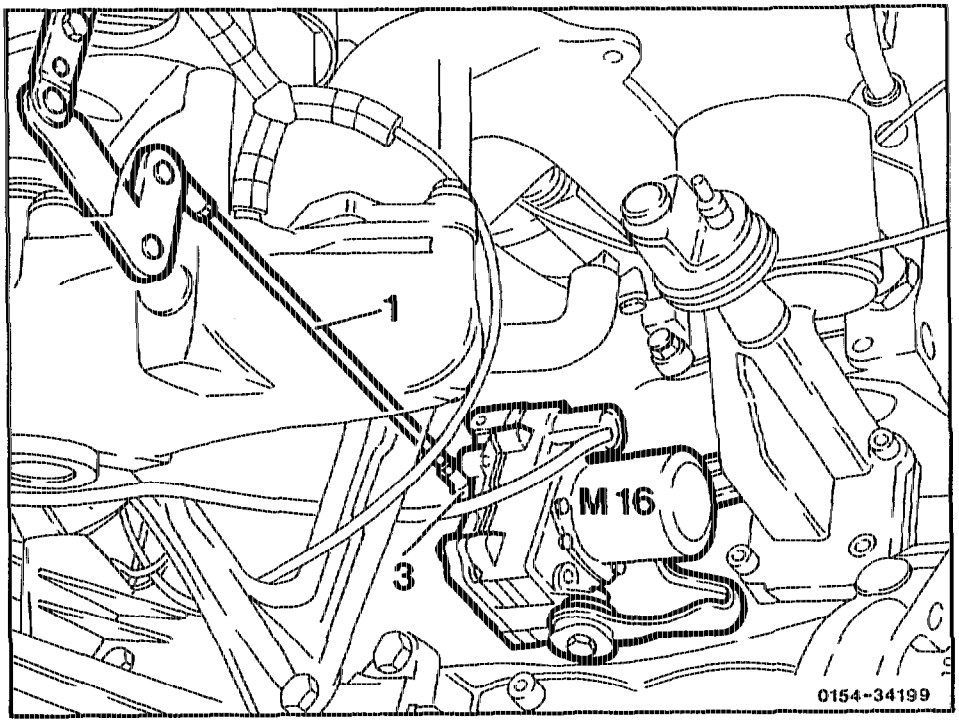

Ball socket (3)	unlock, lock.
Connecting rod (1)	detach, attach at Tempomat/cruise control (TPM) actuator (M16).
Throttle control	move into idle speed position.
Lever of Tempomat/cruise control (TPM) actuator (M16)	push toward engine in idling speed position.
Connecting rod (1)	adjust approx. 1 mm or 1 revolution shorter.

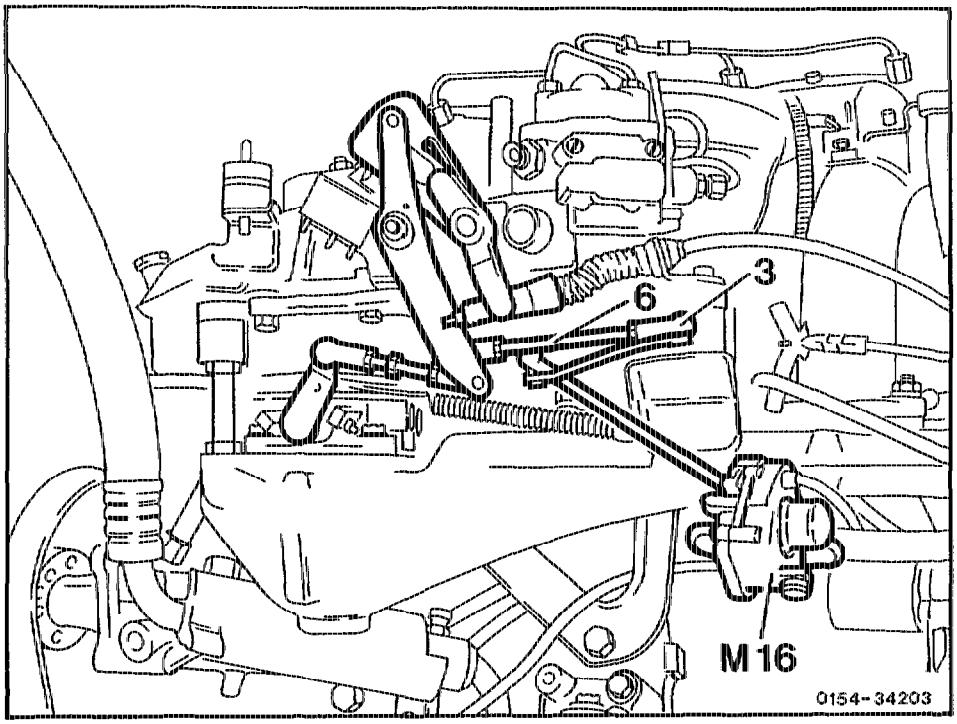

1st version up to approx. 30.06.86 (round rod)

Throttle control	move into idle speed position.
Connecting rod (6)	disengage, engage at reversing lever.
Ball socket (3)	unlock, lock.
Connecting rod (6)	adjust approx. 1 mm or 1 revolution shorter.

2nd version as of approx. 01.07.86 (profilated rod)

Hex. head screw	loosen at profilated rod (6).
Throttle control	move into idle speed position.
Lever of Tempomat/cruise control (TPM) actuator (M16)	raise approx. 1 mm from idle speed position and tighten hex. screw on the connecting rod (6) in this position.

F. Engine 103 and engines 104.980/981 with round rod

Preceding work:
Air cleaner removed (09-400).

Operation no. of operation texts and work units or standard texts and flat rates

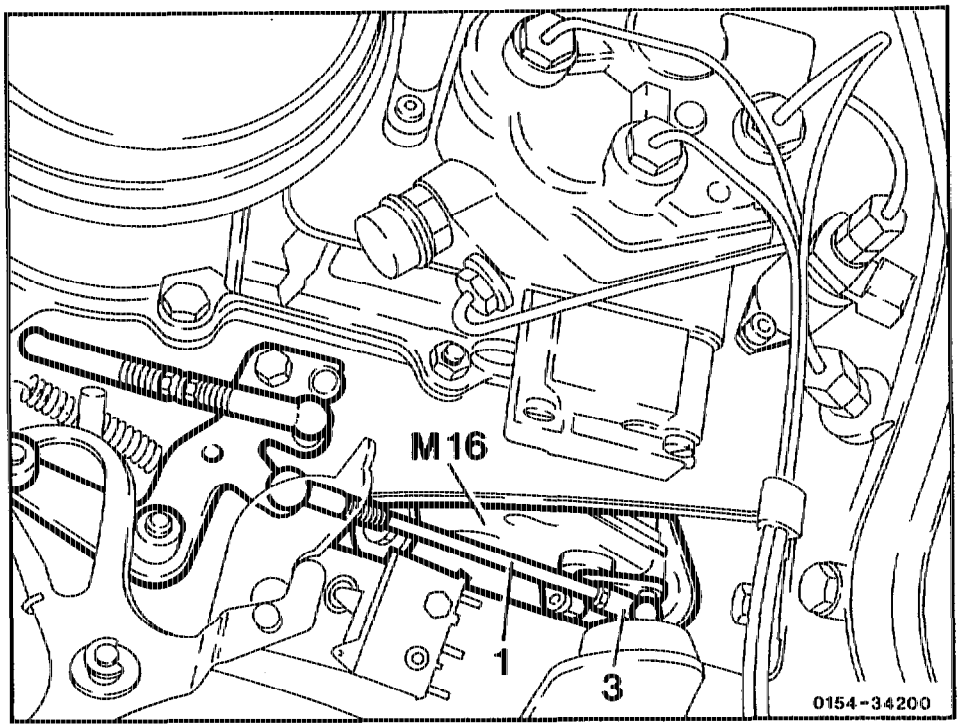

Ball socket (3)	unlock, lock.
Connecting rod (1)	disengage, engage at throttle control.
Throttle control	move into idle speed position.
Lever of Tempomat/cruise control (TPM) actuator (M16)	push with connecting rod (1) into idle speed position.
Connecting rod (1)	adjust approx. 1 mm or 1 revolution shorter.

⚠

On engine 104 (J) and (USA) version do **not** install a profilated rod instead of the round rod. At full throttle the distance between profilated rod (1) and coolant pipe is insufficient (arrow).

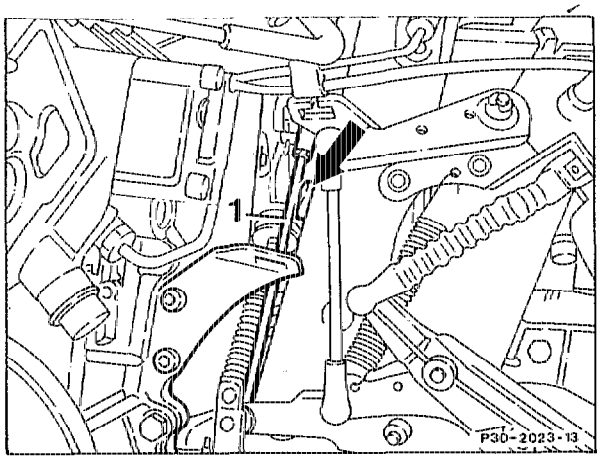

G. Engine 103 and engines 104.980/981 with profilated rod

Preceding work:
Air cleaner removed (09-400).

Operation no. of operation texts and work units or standard texts and flat rates

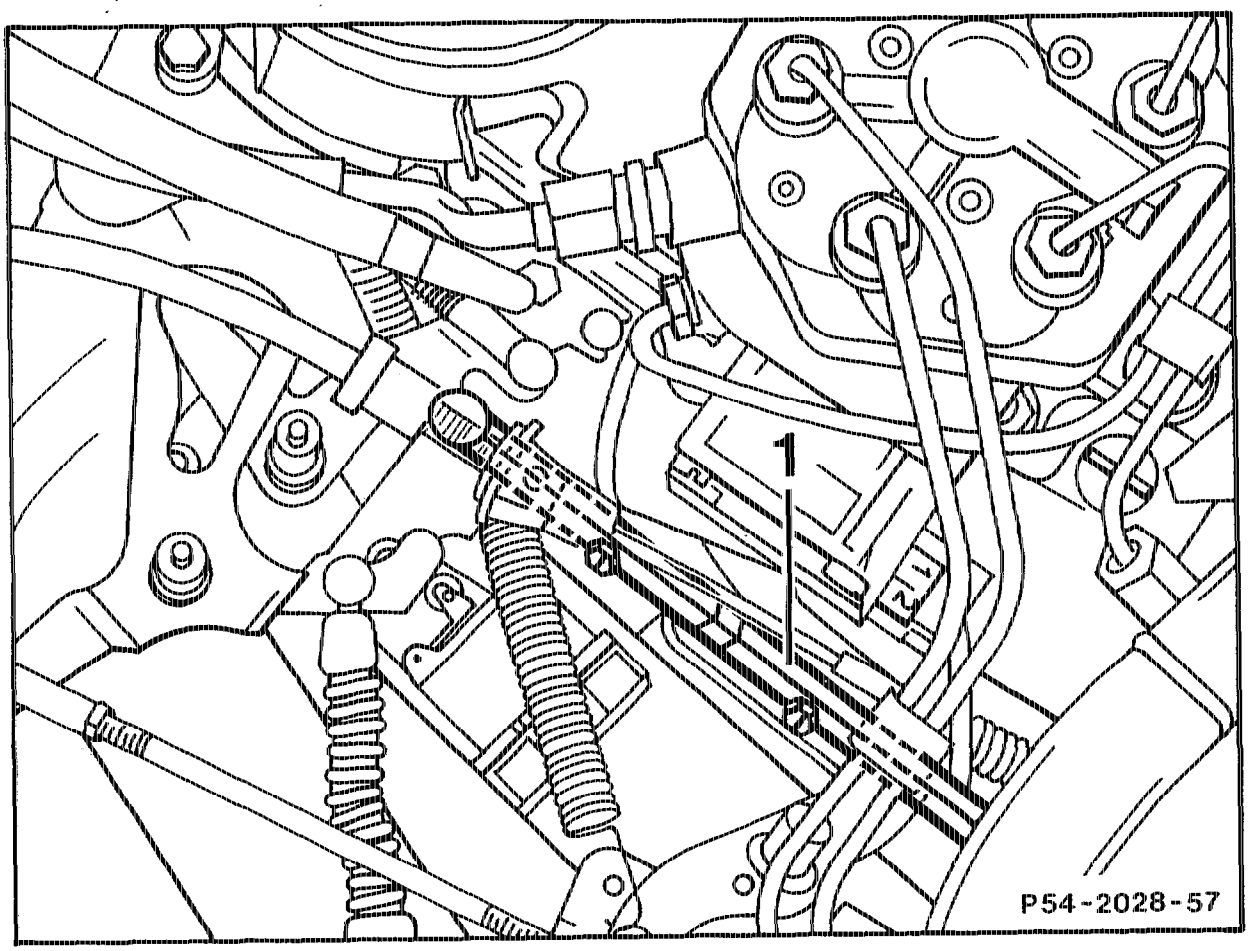

Connecting rod (1)	disengage, engage at throttle control.
Throttle control	move into idle speed position.
Lever of Tempomat/cruise control (TPM) actuator (M16)	push with connecting rod (1) into idle speed position.
Length of connecting rod (1)	check, should be 1 mm shorter. If required, remove connecting rod (1) and adjust.

⚠

On engine 104 (J) and (USA) version, only a round rod may be installed (refer to section F).

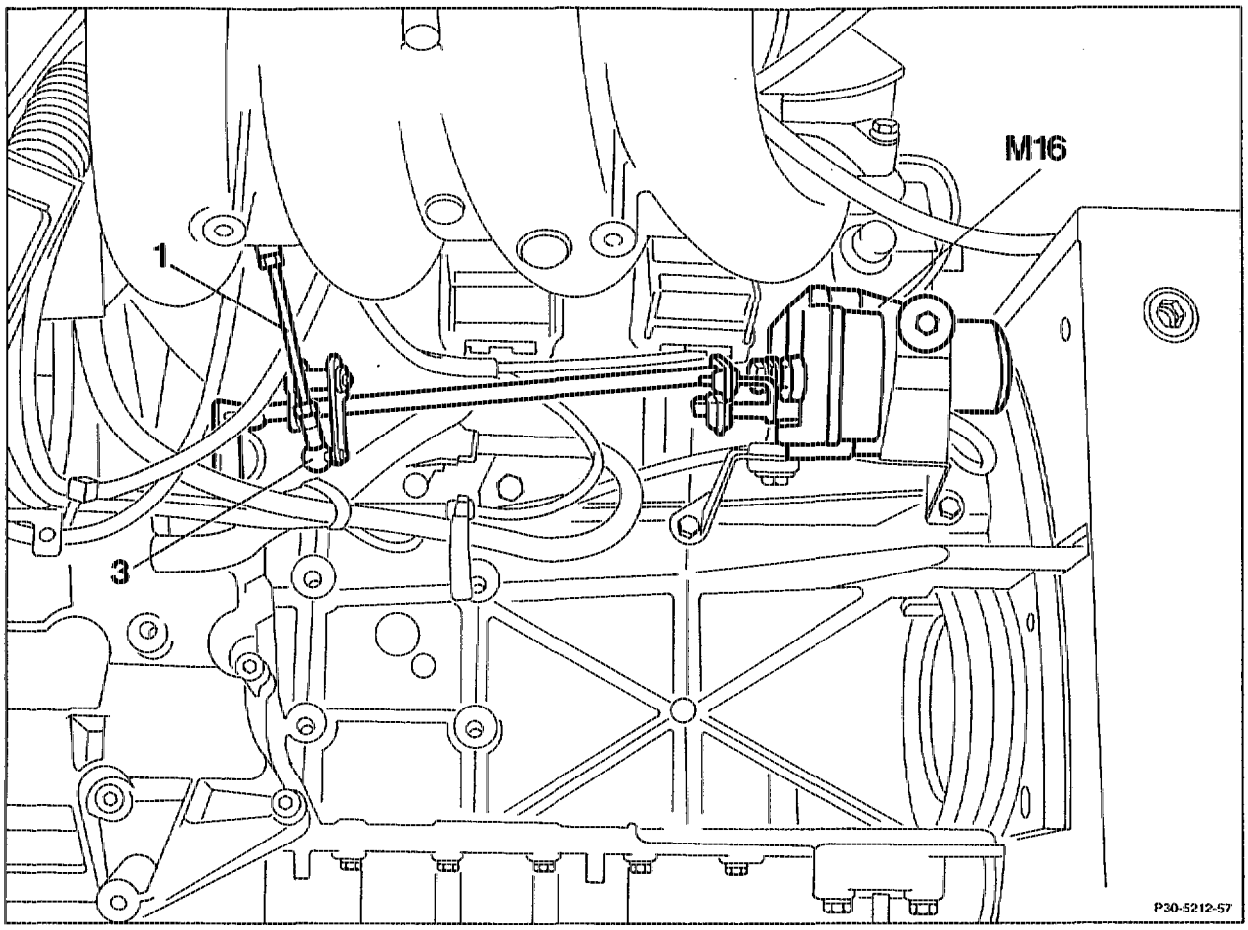

Ball socket (3)	unlock, lock.
Connecting rod (1)	disengage, engage.
Throttle control	move into idle speed position.
Lever of Tempomat/cruise control (TPM) actuator (M16)	push toward engine in idling speed position.
Connecting rod (1)	adjust approx. 1 mm or 1 revolution shorter.

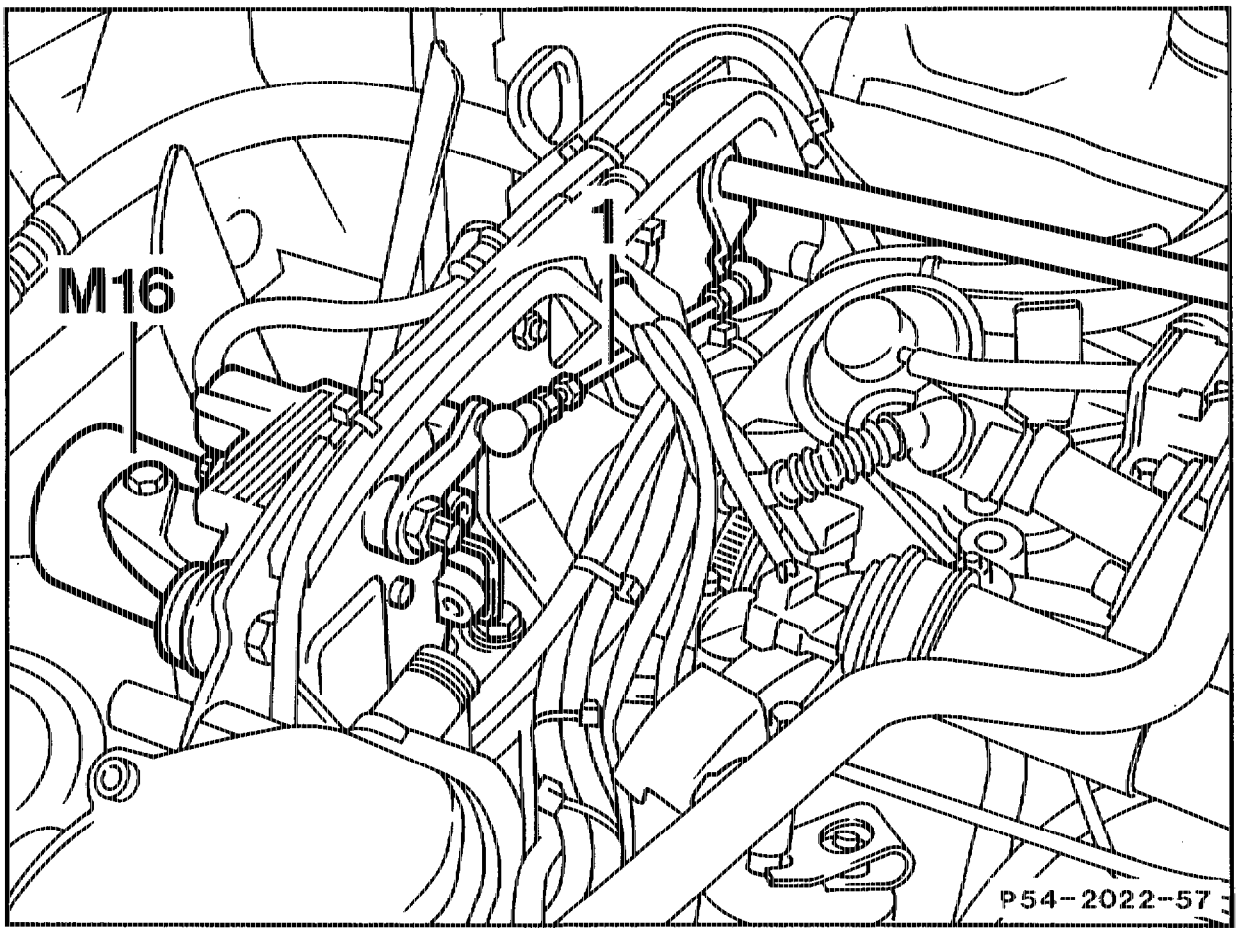

Cover prior to air cleaner	remove, install.
Ball socket	unlock, lock.
Connecting rod (1) at Tempomat/cruise control (TPM) actuator (M16)	disengage, engage.
Throttle control	move into idle speed position.
Lever of Tempomat/cruise control (TPM) actuator (M16)	push toward engine in idling speed position.
Connecting rod (1)	adjust approx. 1 mm or 1 revolution shorter.

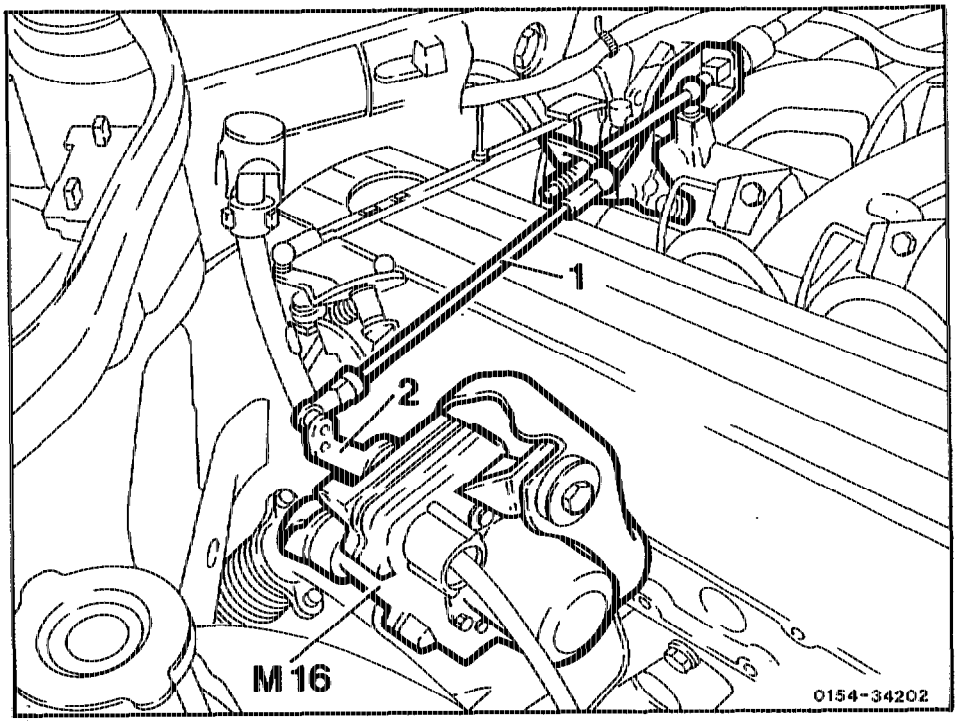

Ball socket	unlock, lock at Tempomat/cruise control (TPM) actuator (M16).
Connecting rod (1)	disengage, engage at Tempomat/cruise control (TPM) actuator (M16).
Throttle control	move into idle speed position.
Lever (2) of Tempomat/cruise control (TPM) actuator (M16)	push away from engine into idle speed position.
Connecting rod (1)	adjust approx. 1 mm or 1 revolution shorter.

Note

When replacing the connecting rod (1) be sure to install only the version with black ball heads. These parts are available as a repair set. This means that the connecting rod (1), the lever (2) on Tempomat/cruise control (TPM) actuator (M16) and the ball head on the regulating lever must be replaced simultaneously.

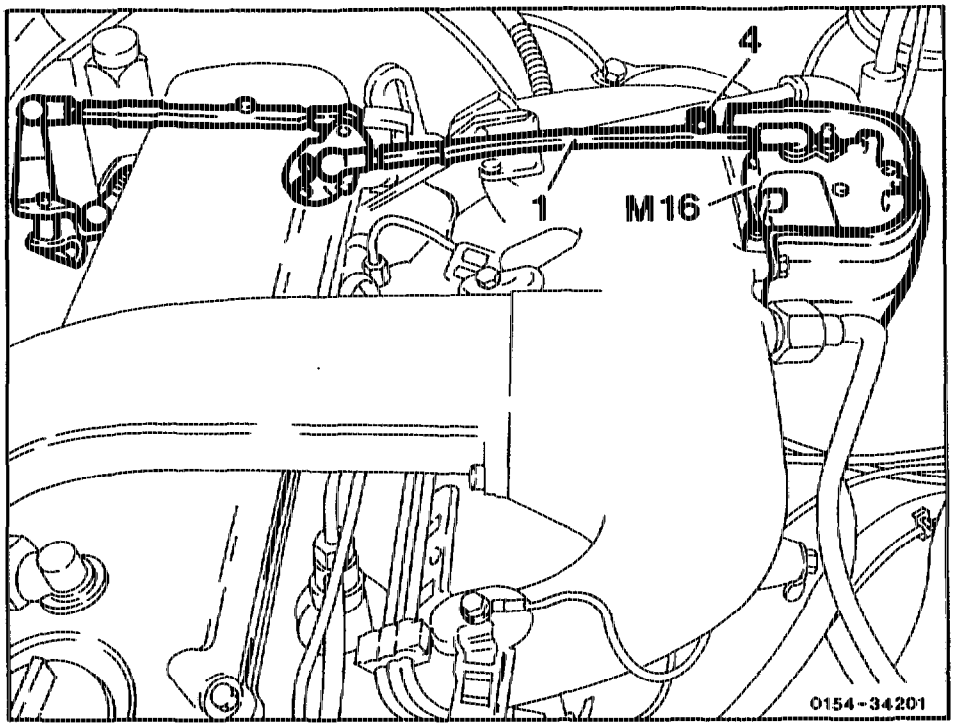

Hex. head screw (4)	loosen at profilated rod (1).
Throttle control	move into idle speed position.
Lever of Tempomat/cruise control (TPM) actuator (M16)	push toward engine in idling speed position.
Profilated rod (1)	adjust approx. 0.5 mm longer and tighten hex. head screw (4) in this position.

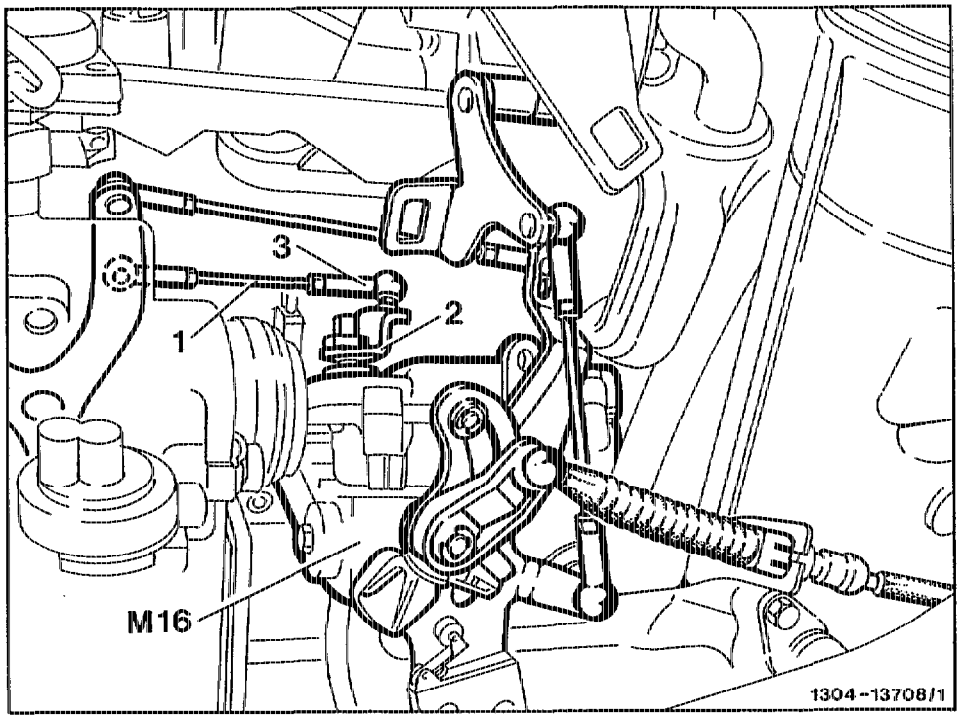

Ball socket (3)	unlock, lock.
Connecting rod (1)	disengage, engage at Tempomat/cruise control (TPM) actuator (M16).
Throttle control	move into idle speed position.
Lever (2) of Tempomat/cruise control (TPM) actuator (M16)	push into idle speed position.
Connecting rod (1)	adjust approx. 1 mm or 1 rotation shorter.

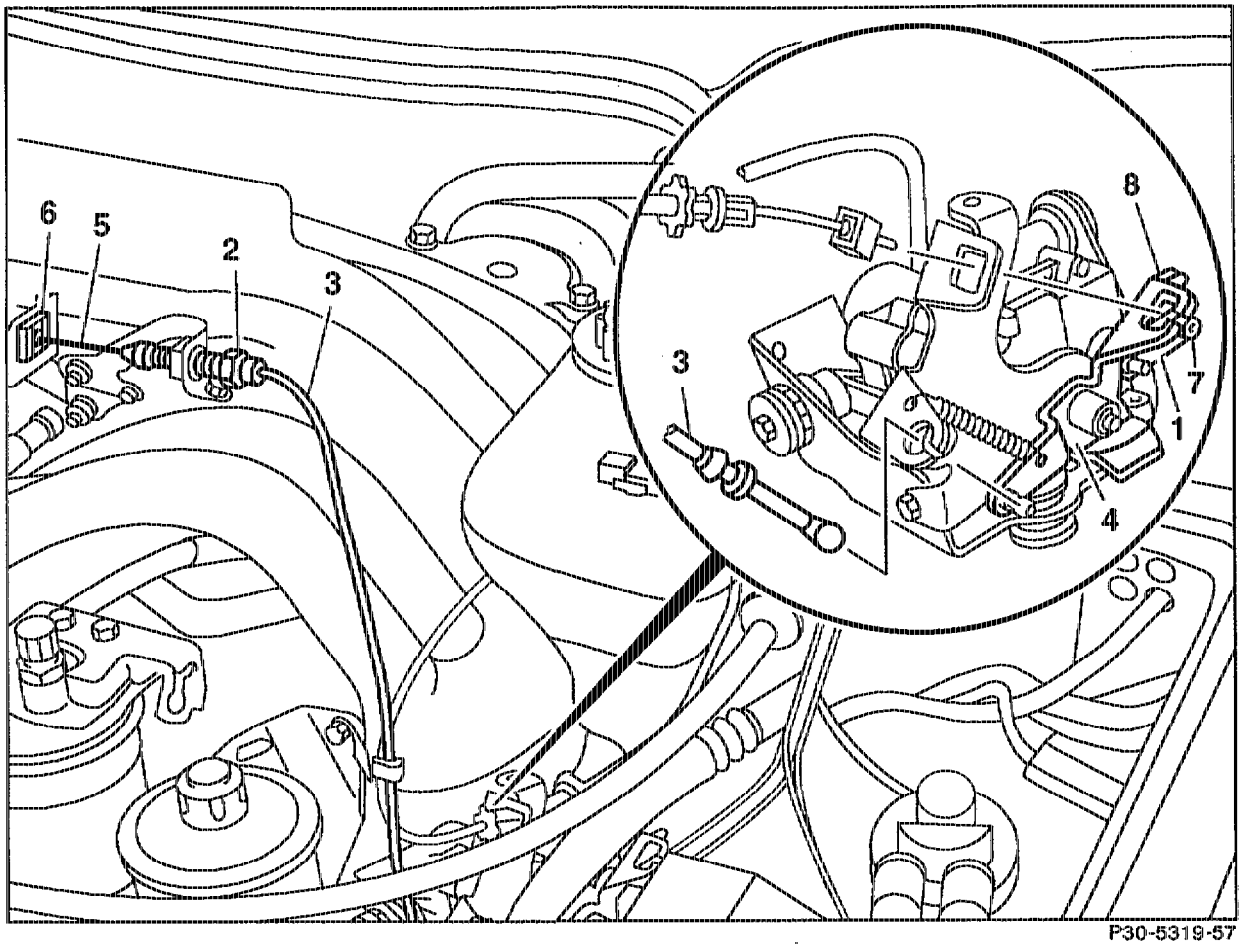

P30-5319-57

Control lever (1) . . . . . turn clockwise until it abuts the internal idle stop.

By rotating the bowden cable adjusting screw (2) on the engine side . . . . . adjust the control cable (3) until the gate lever (4) has reached the idle limit stop, or play between cable (5) and end piece (6) is approx. 0 to 1 mm.

Note

Gate roller (7) must abut idle limit stop (8) without any play.

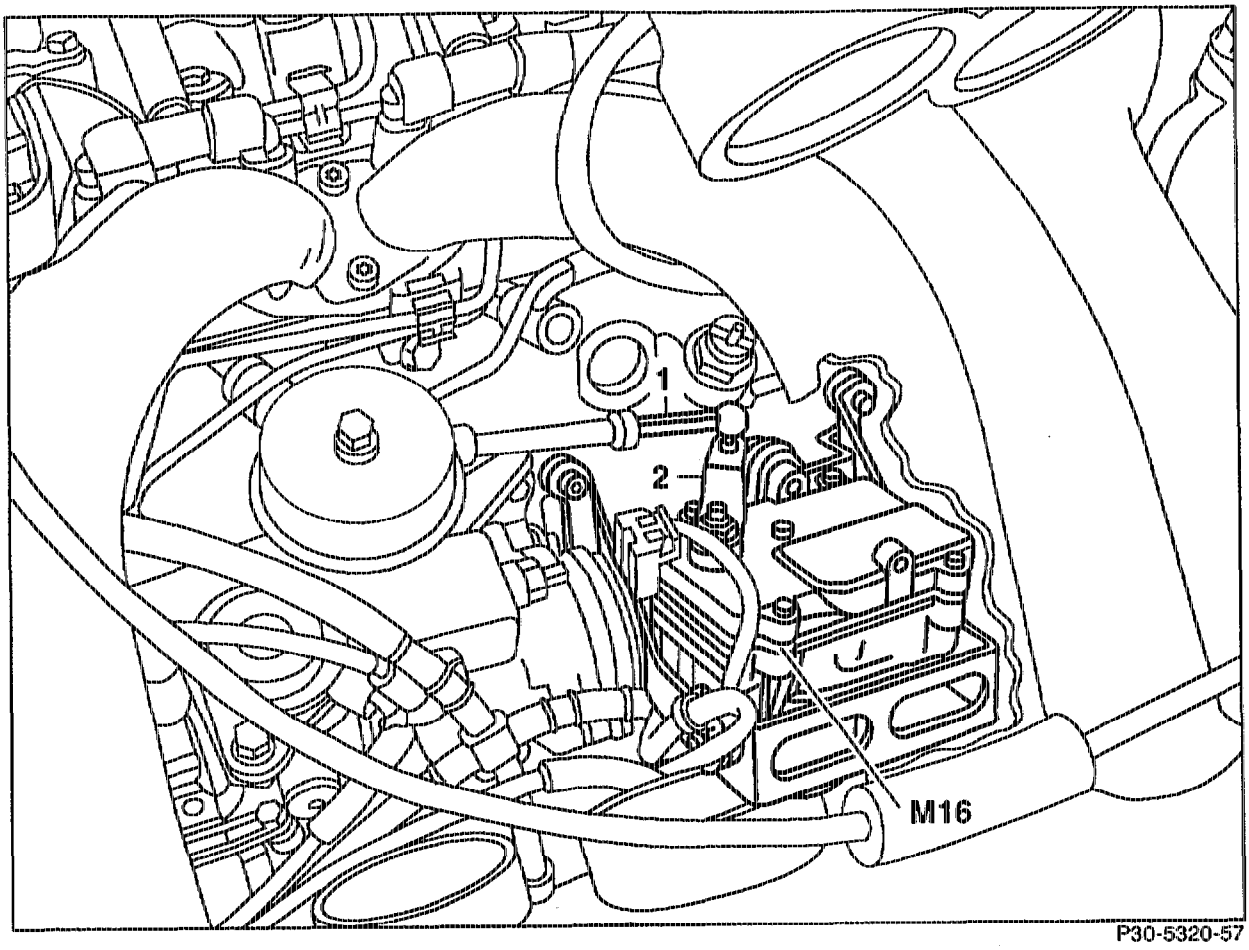

P30-5320-57

Resonance suction line	loosen and fold backwards, fold forwards and secure (14-1984).
Connecting rod (1) on Tempomat/cruise control actuator (M16)	disengage, engage.
Throttle control	move into idle speed position.
Lever (2) of Tempomat/cruise control actuator (M16)	push into idle speed position in opposite direction to arrow.
Connecting rod (1)	adjust approx. 1 mm or 1 revolution shorter.

Note

Pay attention to ease of movement and wear of connecting rods, transfer lever and ball sockets. Worn parts are to be replaced.

Preceding work:
Cover at left or right under instrument panel removed (68-150).

Operation no. of operation texts and work units or standard texts and flat rates

A. Model 124

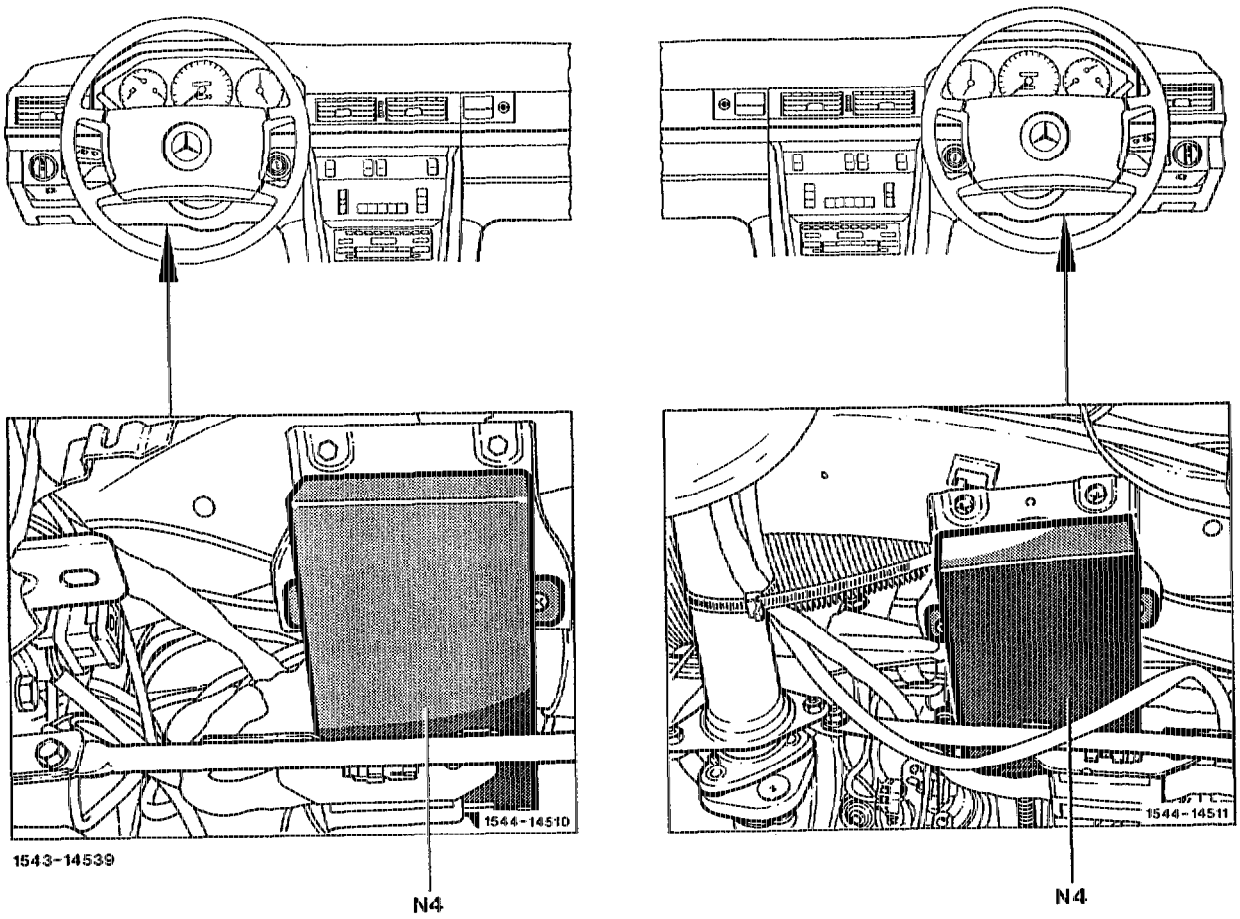

Battery	disconnect, connect.
Connector of harness at Tempomat/cruise control (TPM) amplifier (N4)	disconnect, connect.
Tempomat/cruise control (TPM) amplifier (N4)	unscrew, screw on. If amplifier is defective, always check the adjustment of connecting rod.
Function test	perform on road.

Note
A new cruise control reference resistor amplifier is being phased in. Check reference resistor prior to subsequent use (30-506).

The new Tempomat/cruise control (TPM) reference resistor amplifier (N 4/2) has no influence either on cabling or, as a consequence, on wiring diagrams.

B. Model 129

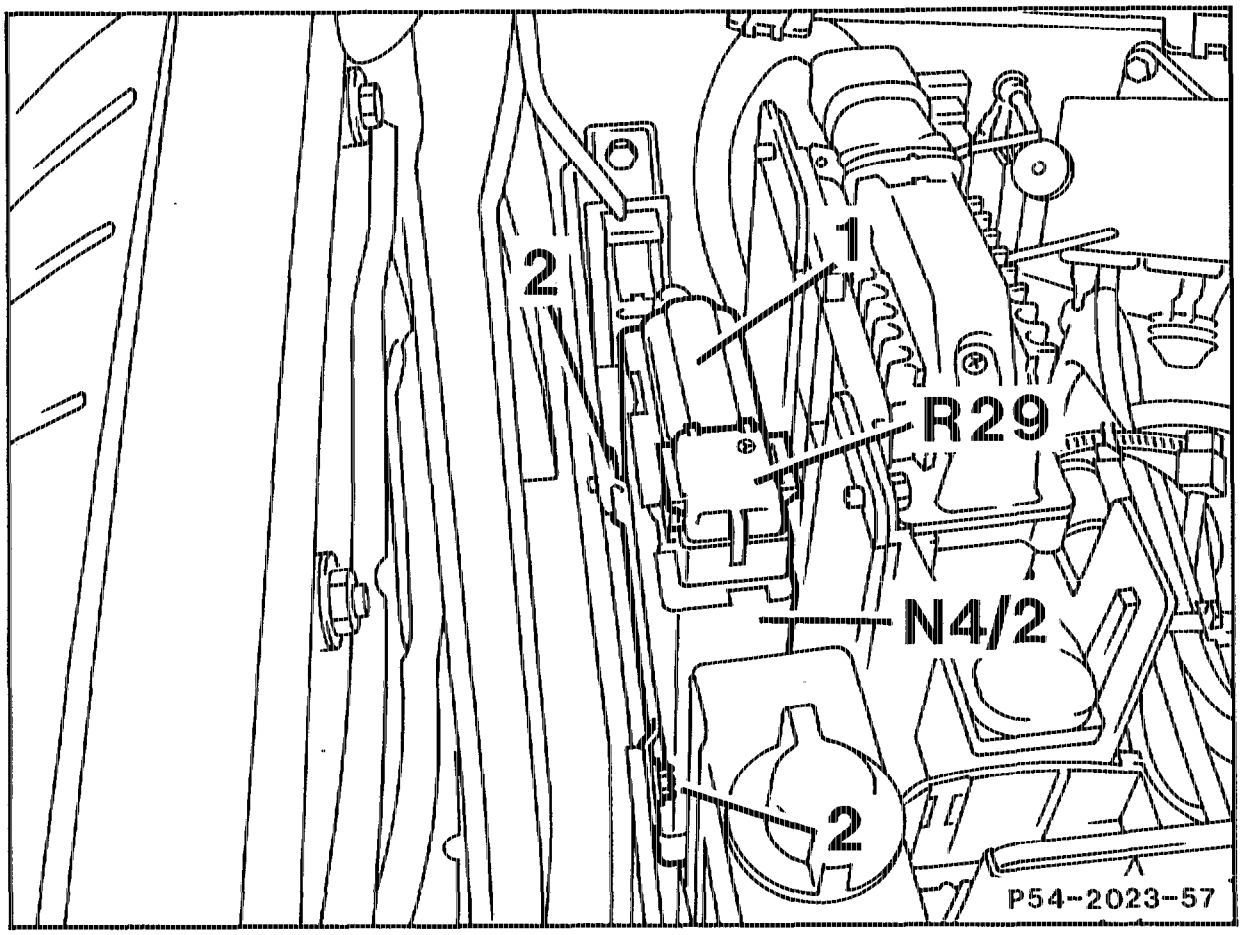

Battery	disconnect, connect.
Cover of unit compartment, right	remove, install.
Tempomat/cruise control reference resistor (R29)	disconnect, check (30-506) and connect.
Connector (1) of harness	disconnect, connect.
Nuts (2)	unscrew, screw on.
Tempomat/cruise control (TPM) reference resistor amplifier (N4/2)	remove, install. If amplifier is defective, always check adjustment of connecting rod.
Function test	perform on road.

C. Model 140

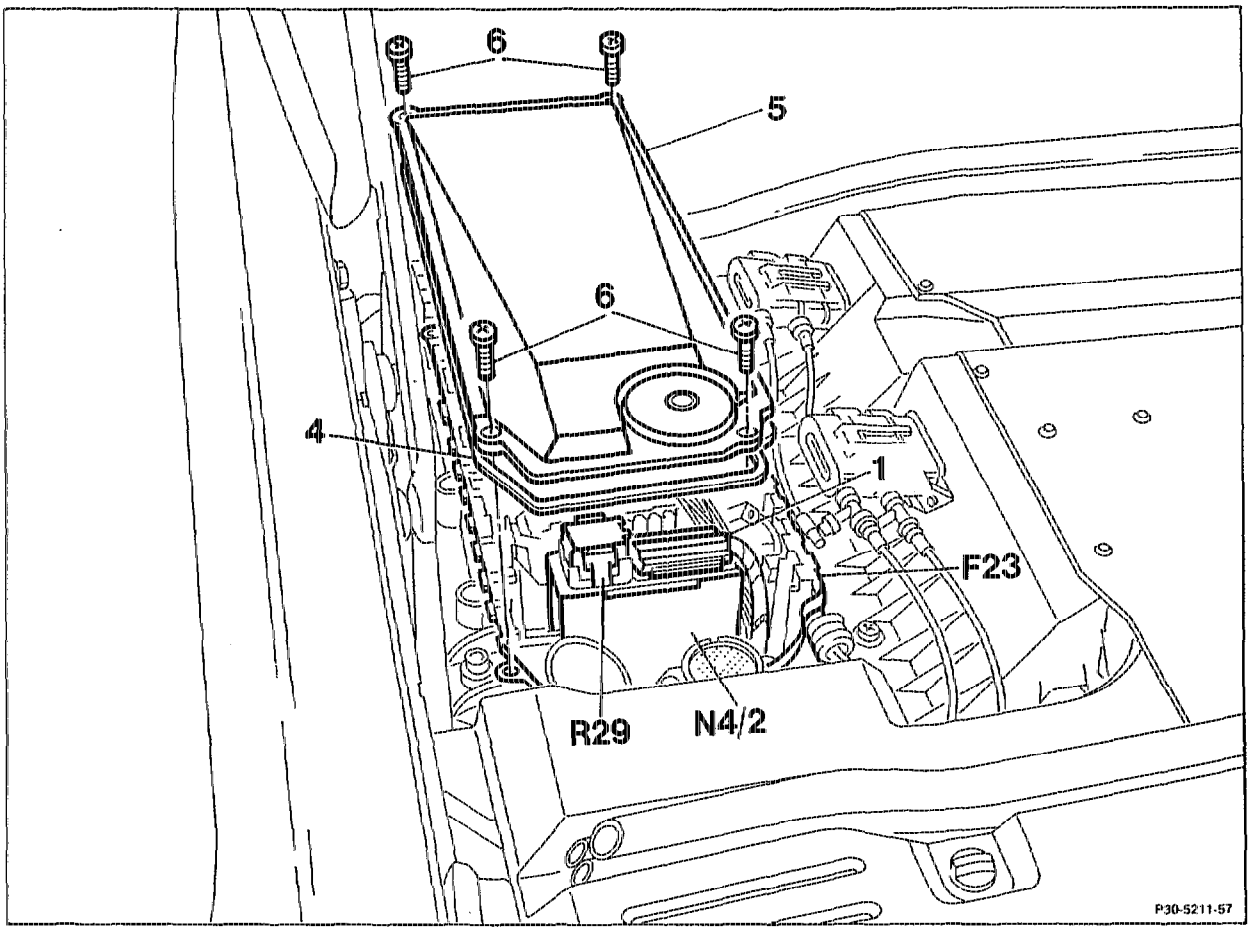

Battery	disconnect, connect.
Screws (6)	unscrew, screw in.
Cover (5) of module box (F23)	lift up, mount.
Gasket (4)	check for damage, when installing, ensure correct seating of gasket (4).
Tempomat/cruise control reference resistor (R29)	disconnect, check (30-506) and connect.
Connector (1) of harness	disconnect, connect.
Tempomat/cruise control (TPM) reference resistor amplifier (N4/2)	remove, install using assembly lever 140 589 01 33 00. If amplifier is defective, always check adjustment of connecting rod.

Function test . . . . . perform on road.

Special tool

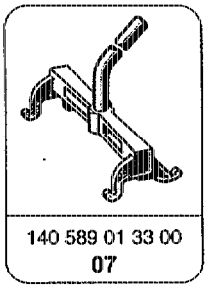

140 589 01 33 00
07

D. Model 201

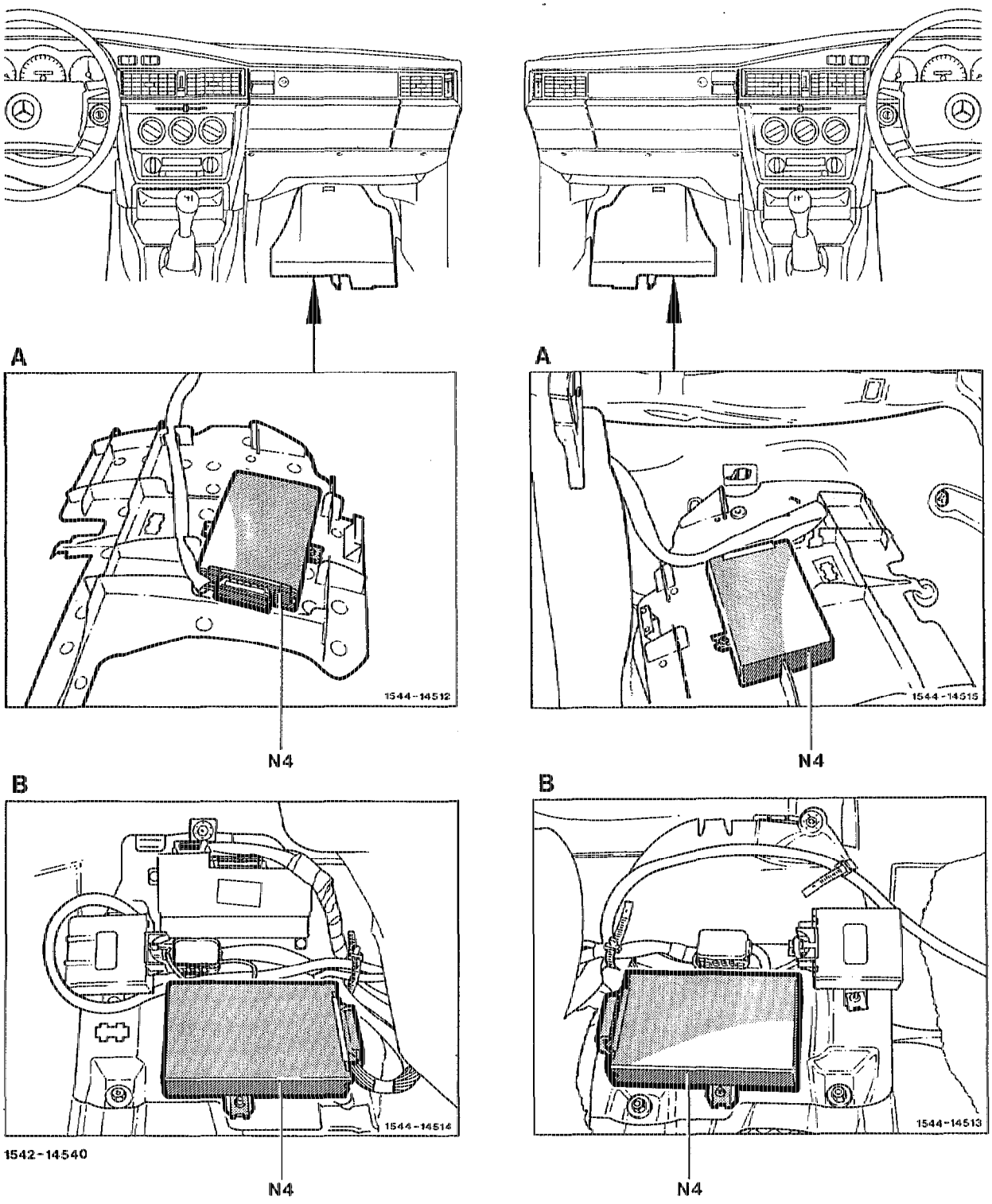

Battery	disconnect, connect.
Foot mat front right or left	remove, install.
Foot support front right or left	remove, install.

Connector of harness at Tempomat/cruise control (TPM) amplifier (N4)	disconnect, connect.
Tempomat/cruise control (TPM) amplifier (N4)	unscrew, screw on at foot support (version A).
Fastening plate for cruise control amplifier	remove, install (version B).
Tempomat/cruise control (TPM) amplifier (N4)	unscrew, screw on at fastening plate (version B). If amplifier is defective, the adjustment of the connecting rod must be checked.
Function test	perform on road.

Note

A new cruise control reference resistor amplifier is installed on models 201.029/128. The remaining models will be phased in. Prior to re-use, check reference resistor (30-506).

The new Tempomat/cruise control reference resistor amplifier (N4/2) has no influence either on cabling or, as a consequence, on wiring diagrams.

Preceding work:
Cover at left or right under instrument panel removed (68-150).

Operation no. of operation texts and work units or standard texts and flat rates

A. Model 124

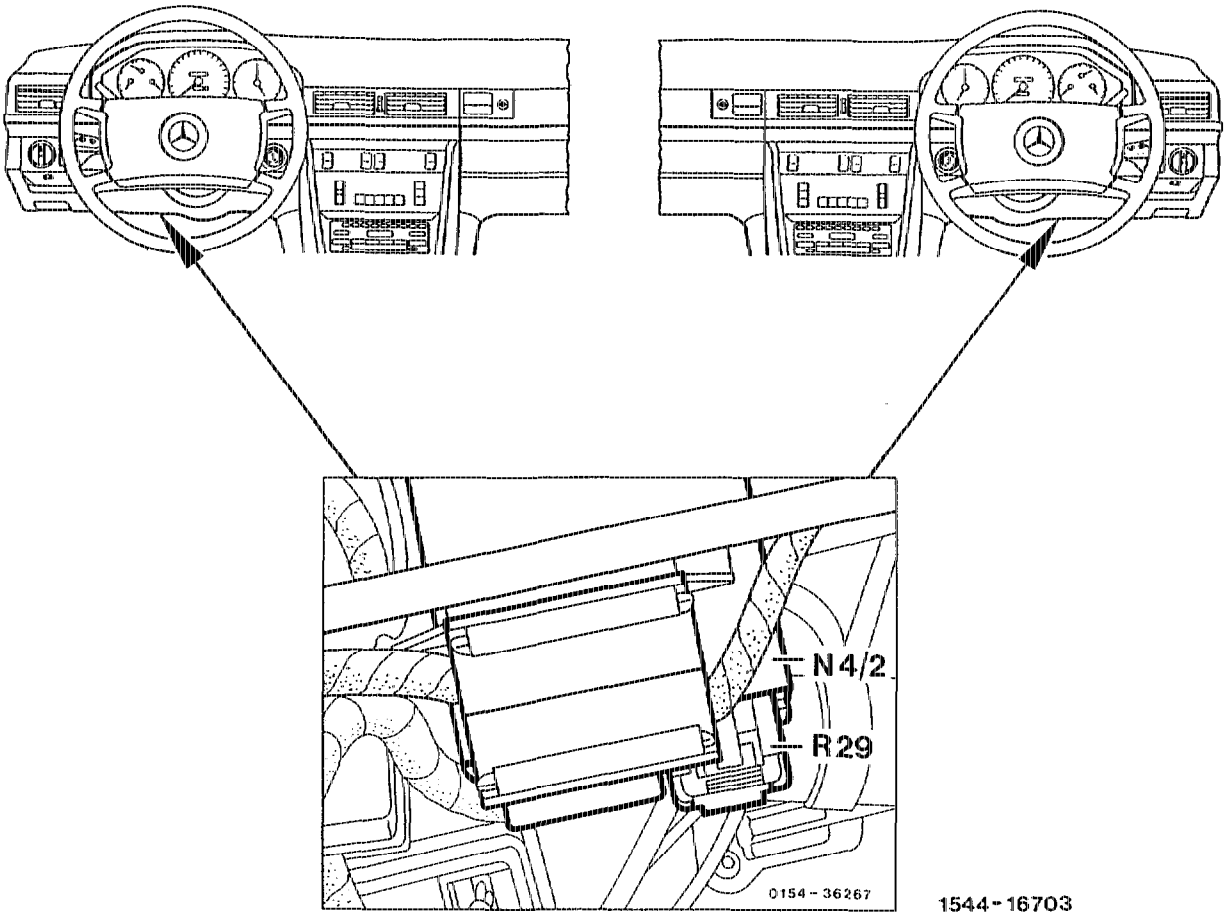

1544-16703

Tempomat/cruise control reference resistor (R29) at Tempomat/cruise control (TPM) reference resistor amplifier (N4/2)	disconnect, by pushing lateral retaining tongues and connect.
Function test	perform on road.

B. Model 129

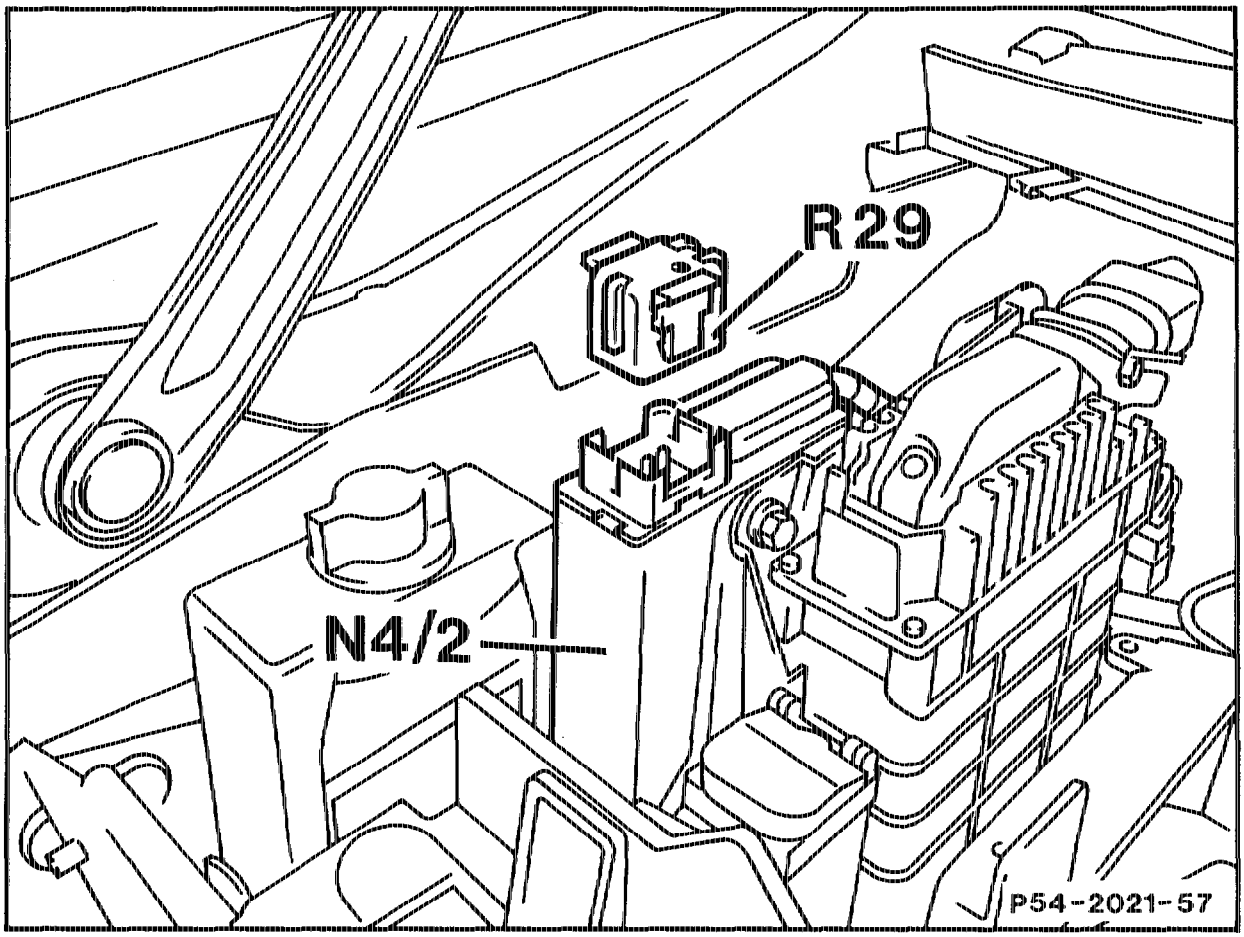

Cover of unit compartment, right	remove, install.
Tempomat/cruise control reference resistor (R29) at Tempomat/cruise control (TPM) reference resistor amplifier (N4/2)	disconnect, by pushing lateral retaining tongues and connect.
Function test	perform on road.

C. Model 140

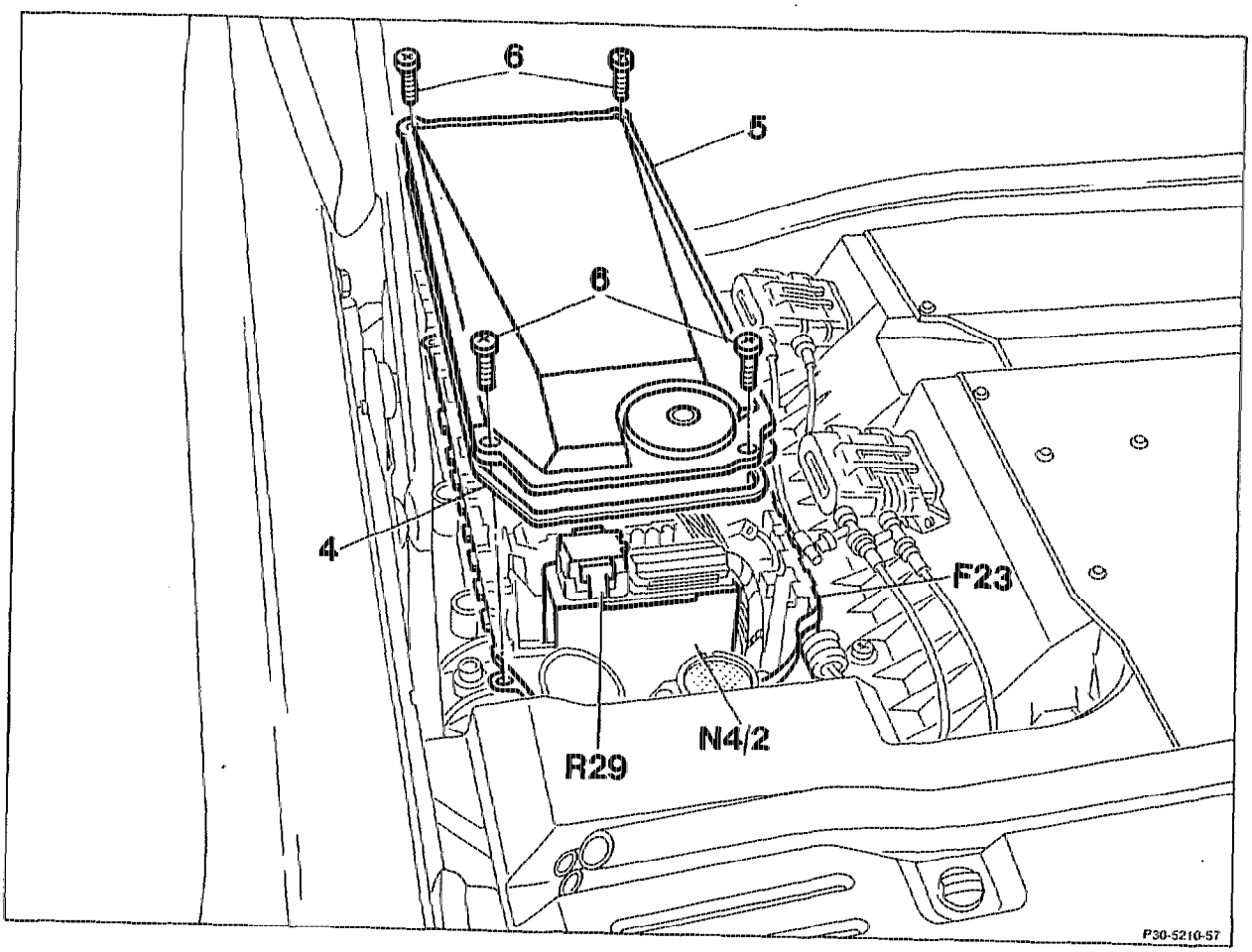

Screws (6)	unscrew, screw in.
Cover (5)of module box (F23)	lift, install.
Gasket (4)	check for damage, when installing, ensure correct seat of gasket (4).
Tempomat/cruise control reference resistor (R29) at Tempomat/cruise control (TPM) reference resistor amplifier (N4/2)	disconnect, by pushing lateral retaining tongues and connect.
Function test	perform on road.

D. Model 201

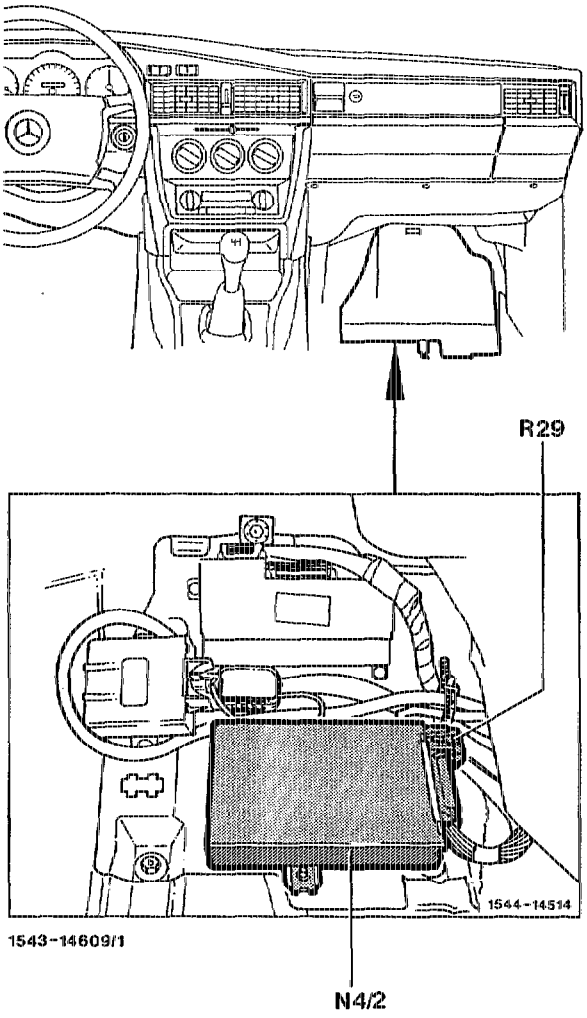

1543-14609/1

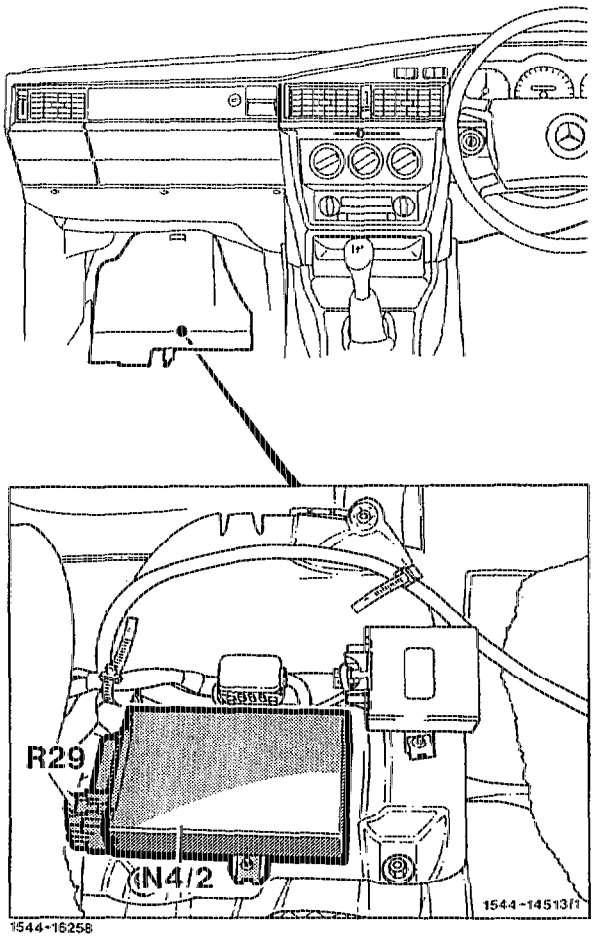

1544-15258

Floor mat front right or left	remove, install.
Foot support front right or left	remove, install.
Tempomat/cruise control reference resistor (R29) at Tempomat/cruise control (TPM) reference resistor amplifier (N4/2)	disconnect, by pushing lateral retaining tongues and connect.
Function test	perform on road.

Preceding work:
Cover at left or right under instrument panel removed (68-150).

Operation no. of operation texts and work units or standard texts and flat rates

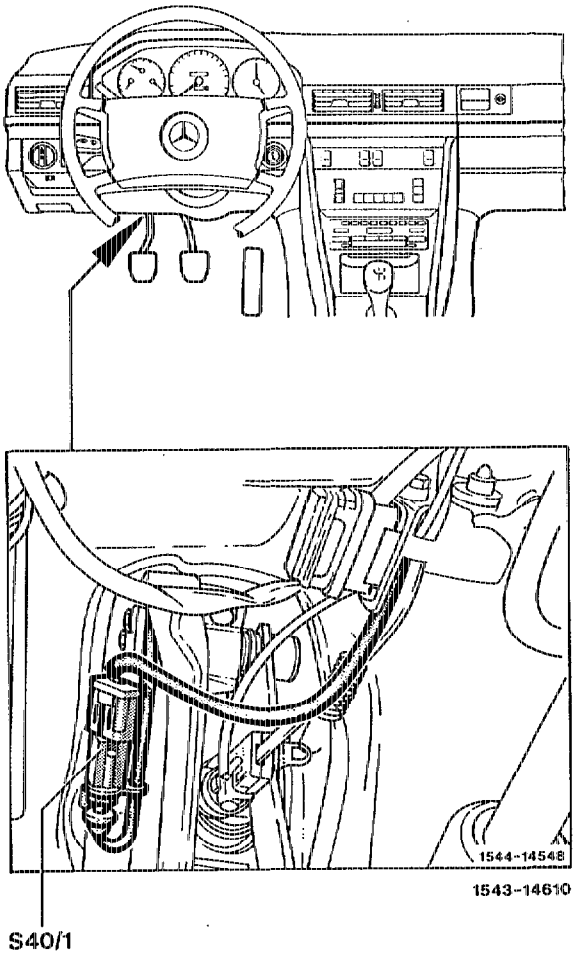

Connector at clutch pedal switch, Tempomat/ cruise control (TPM) (S40/1)	disconnect, connect.
Clutch pedal switch, Tempomat/cruise control (TPM) (S40/1)	loosen and remove.
Function test	perform on road.

Operation no. of operation texts and work units or standard texts and flat rates

A. Procedure models 124.128/133/193/333/393 up to 06/90 vehicles without emission control system

Removal, installation

1 Make harness according to section C.

2 Disconnect ground cable on battery.

3 Remove cover of fuse and relay box.

4 Loosen fuse carrier and unclip relay holder.

5 Pull cable end with the 4 jacks through the rubber grommet laterally at the right into fuse and relay box. Then mount 6-pin connector on harness (for assignment refer to section C).

6 Clip 6-pin connector into relay holder of fuse and relay box (field E).

7 Mount relay holder and connect Tempomat/cruise control boost air cut-off relay (K12/1).

8 Install cover of fuse and relay box.

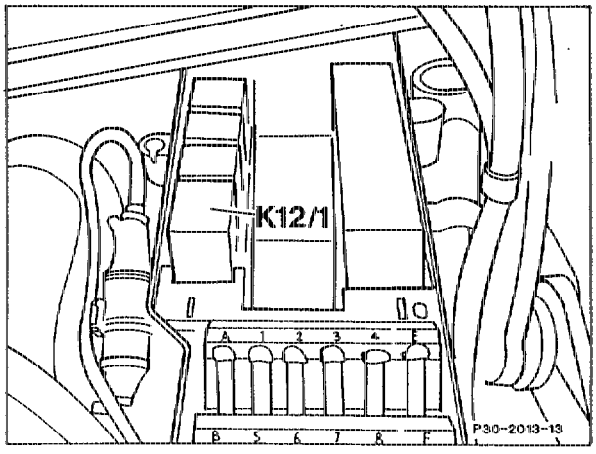

9 Install harness (1) on left-hand wheelhouse toward plug connection of Tempomat/cruise control actuator.

10 Mount 8-pin intermediate plug of harness between plug connection of Tempomat/cruise control actuator.

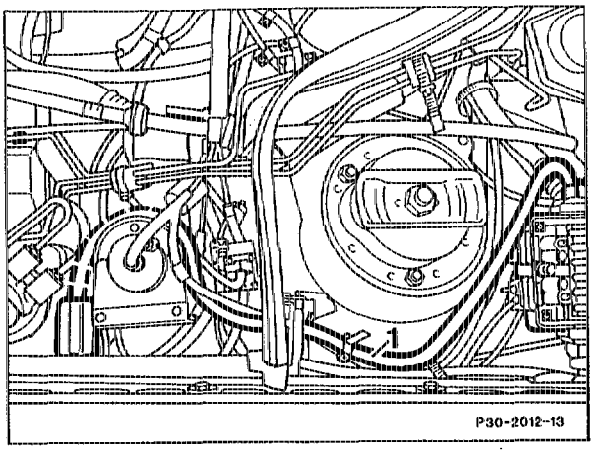

11 Install ground cable at ground W3 and screw on.

1 Harness
2 Screw M6x16
3 Washer A6.4
W3 Ground, left front wheelhouse (at ignition coil)

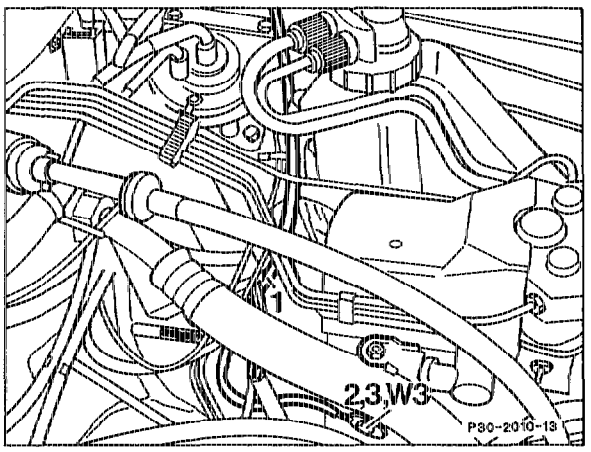

12 Install cable (1) with jack on actuator harness along towards A/C compressor/boost pressure cut-out microswitch (S27 or S27/7) on vehicles with refrigerant compressor and fasten.

13 **On vehicles without refrigerant compressor**

Take ground cable (layout 2) out of connector for boost pressure cut-out microswitch (S27/7), cut off jack and tie back cable. Then insert ground cable of new harness into layout 2.

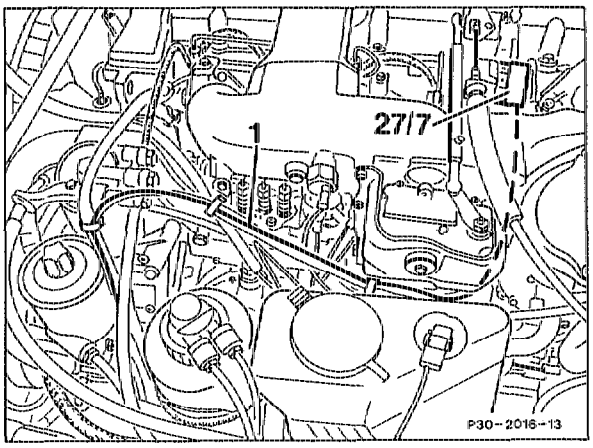

14 **On vehicles with refrigerant compressor** Remove grounding bridge in connector for A/C compressor/boost pressure cut-out microswitch (S27), insert remaining ground cable into layout 5. Then insert ground of new harness (1) into layout 4.

15 Connect ground cable to battery.

16 Perform test drive.

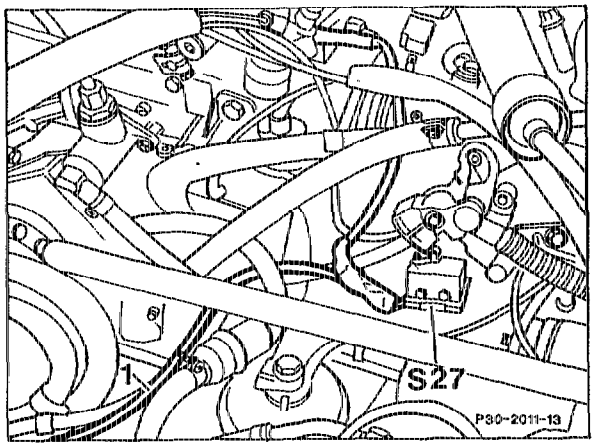

B. Procedure model 201.128 up to 06/90 vehicles without emission control system

1 Make harness according to section C.

2 Disconnect ground cable on battery.

3 Remove cover of auxiliary relay and fuse box and loosen relay holder.

4 Clip 12-pin connector of harness (1) into relay holder and fasten relay holder.

5 Press relay Tempomat/cruise control boost air cut-off (K12/1) on 12 pin connector and mount cover again on auxiliary relay and fuse box.

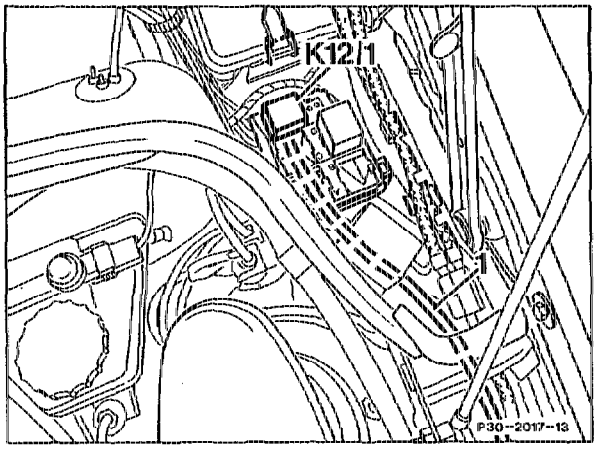

6 Install harness on left-hand wheelhouse to ground (W3).

7 Screw ground cable of harness (1) to ground (W3).

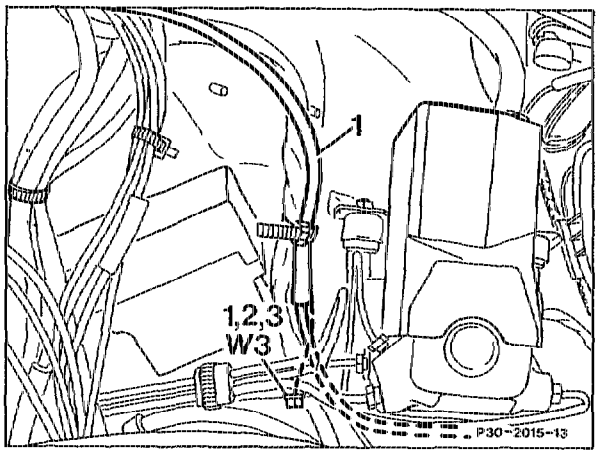

1 Harness
2 Screw M6x16
3 Washer A6.4
W3 Ground, left front wheelhouse (at ignition coil)

8 Install harness (1) further towards plug connection of Tempomat/cruise control actuator and mount 8-pin intermediate plug between plug connection of Tempomat/cruise control actuator.

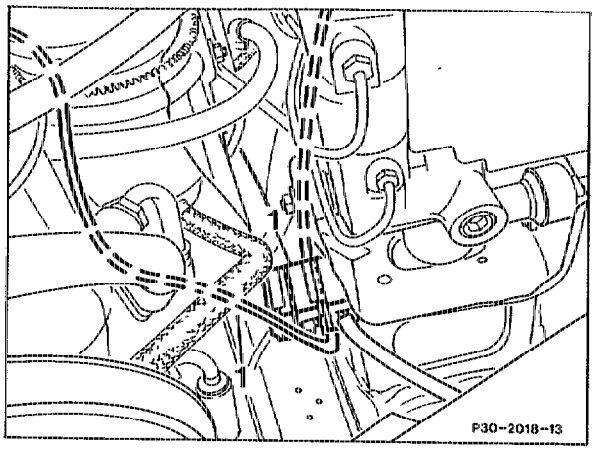

9 Install cable (1) with jack on actuator harness along towards A/C compressor/boost pressure cut-out microswitch (S27 or S27/7) and fasten.

10 **On vehicles without refrigerant compressor**
Take ground cable (layout 2) out of connector for boost pressure cut-out microswitch (S27/7), cut off jack and bind back cable. Then insert ground cable of new harness into layout 2.

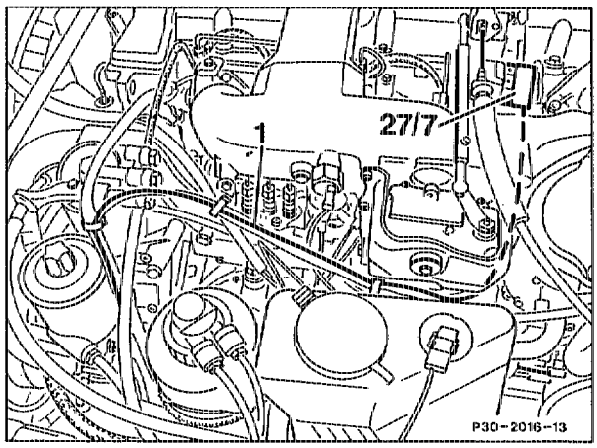

11 **On vehicles with refrigerant compressor**
Remove grounding bridge in connector for A/C compressor/boost pressure cut-out microswitch (S27), insert remaining ground cable into layout 5. Then insert ground cable of new harness (1) into layout 4.

12 Connect ground cable to battery.

13 Perform test drive.

C. Harnesses and wiring diagrams

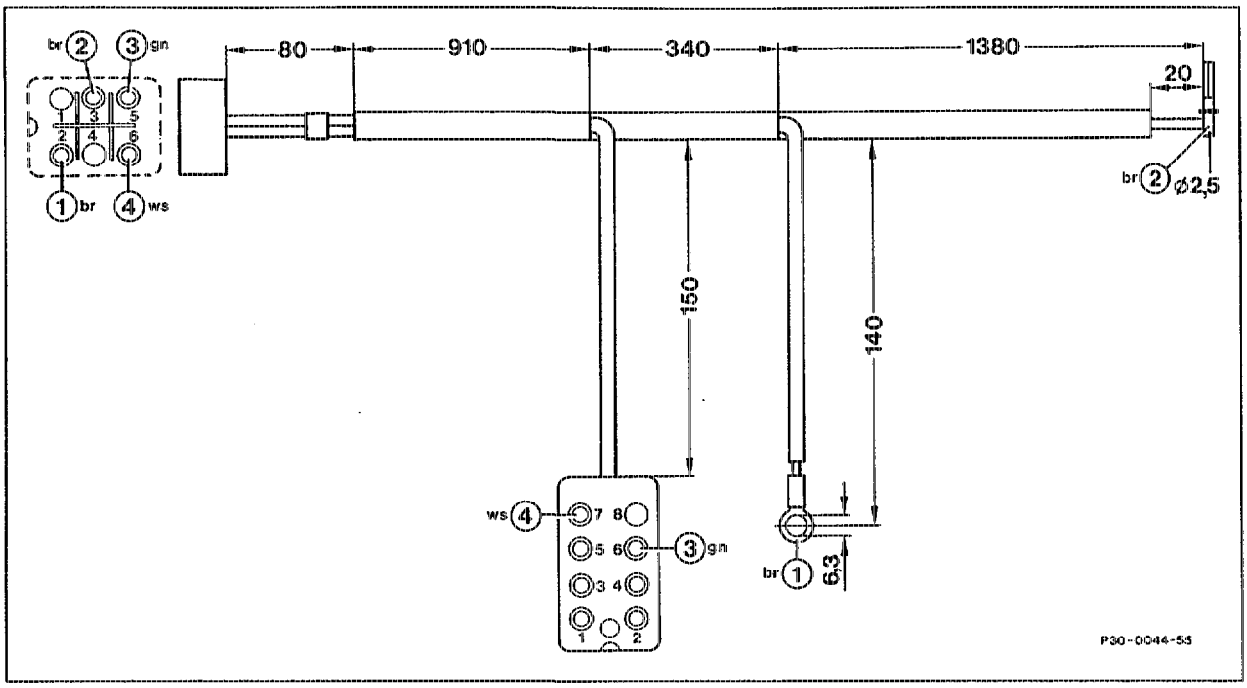

Harness for model 124

Note

Mount 6-pole connector only after harness has been installed in relay and fuse box. In addition, insert loose plug-in sockets on 8-pole intermediate plug into layouts 1 to 5.

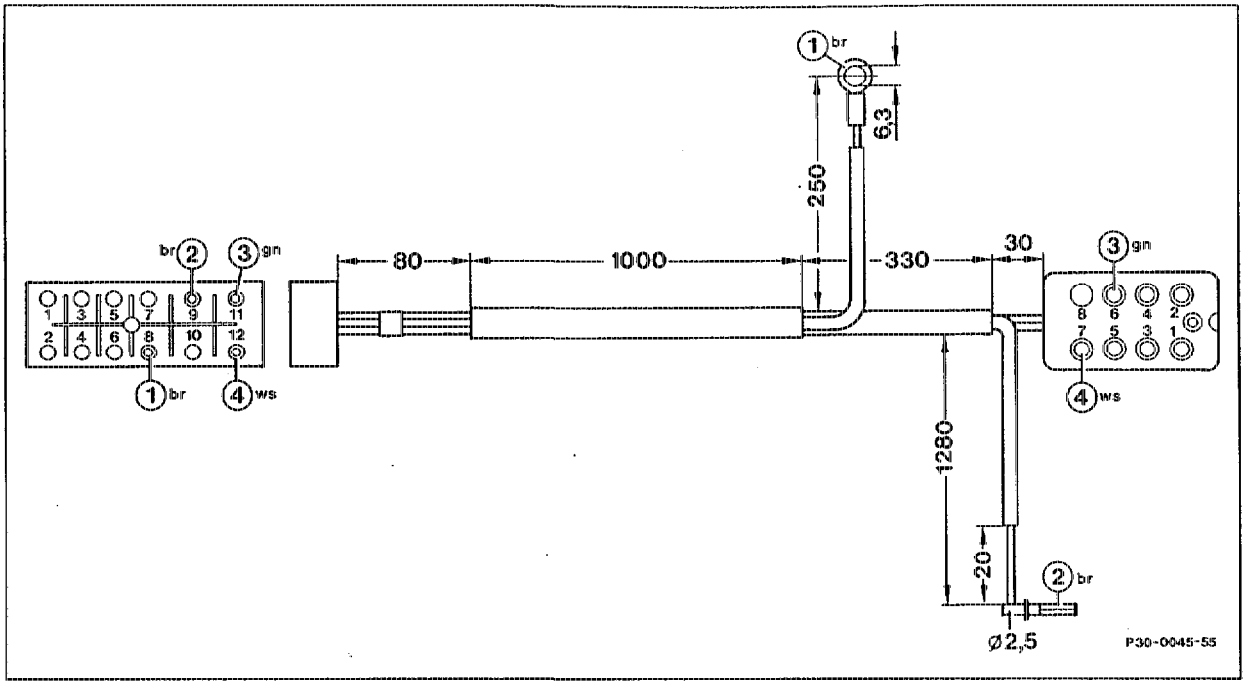

Harness for model 201

Note

Insert loose plug-in sockets on 8-pole intermediate plug into layouts 1 to 5.

Wiring diagram model 124 (vehicles without refrigerant compressor)

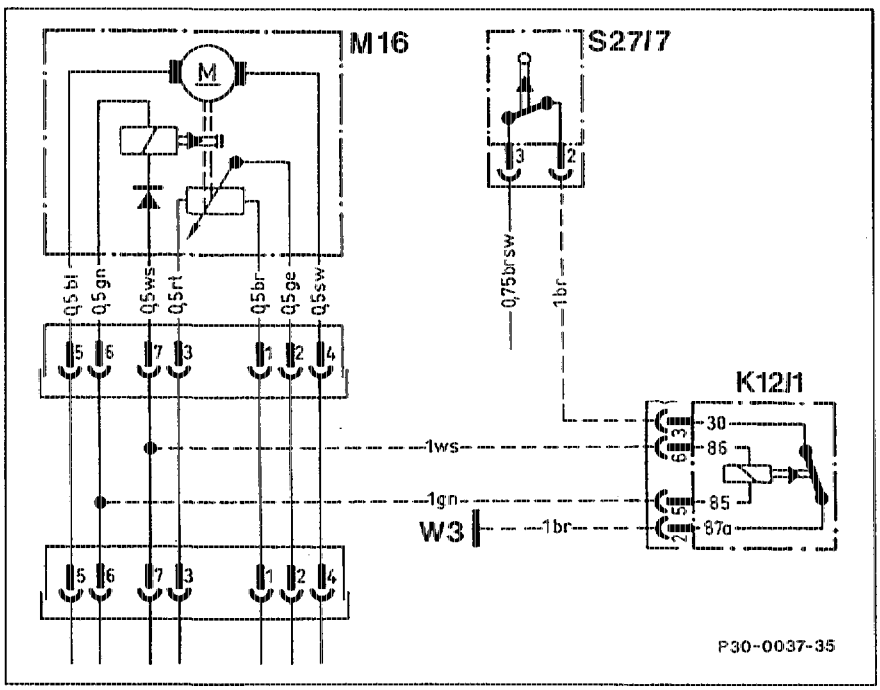

K12/1	Relay, Tempomat/cruise control boost air cut-off
M16	Tempomat/cruise control (TPM) actuator
S27/7	Boost pressure cut-out microswitch
W3	Ground, left front wheelhouse (at ignition coil)

Wiring diagram model 124 (vehicles with refrigerant compressor)

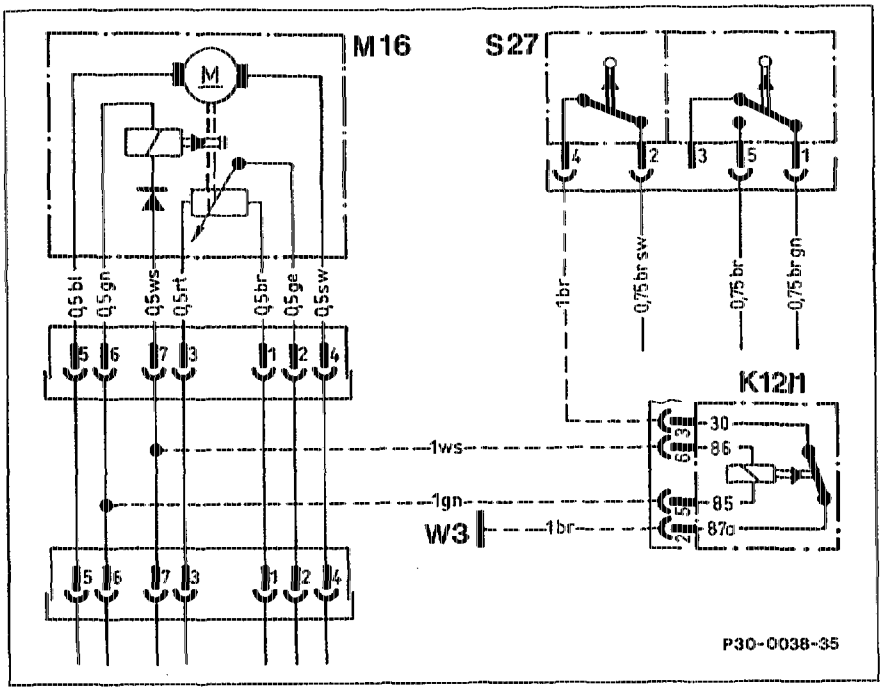

K12/1 Relay, Tempomat/cruise control boost air cut-off
M16 Tempomat/cruise control (TPM) actuator
S27 A/C compressor/boost pressure cut-out microswitch
W3 Ground, left front wheelhouse (at ignition coil)

Wiring diagram model 201 (vehicles without refrigerant compressor)

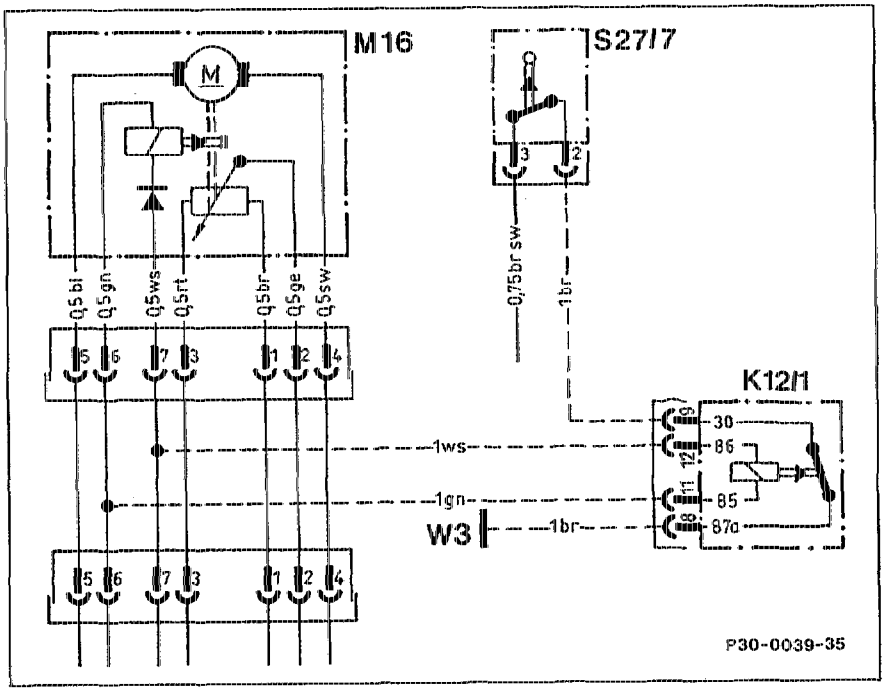

K12/1 Relay, Tempomat/cruise control boost air cut-off
M16 Tempomat/cruise control (TPM) actuator
S27/7 Boost pressure cut-out microswitch
W3 Ground, left front wheelhouse (at ignition coil

Wiring diagram model 201 (vehicles with refrigerant compressor)

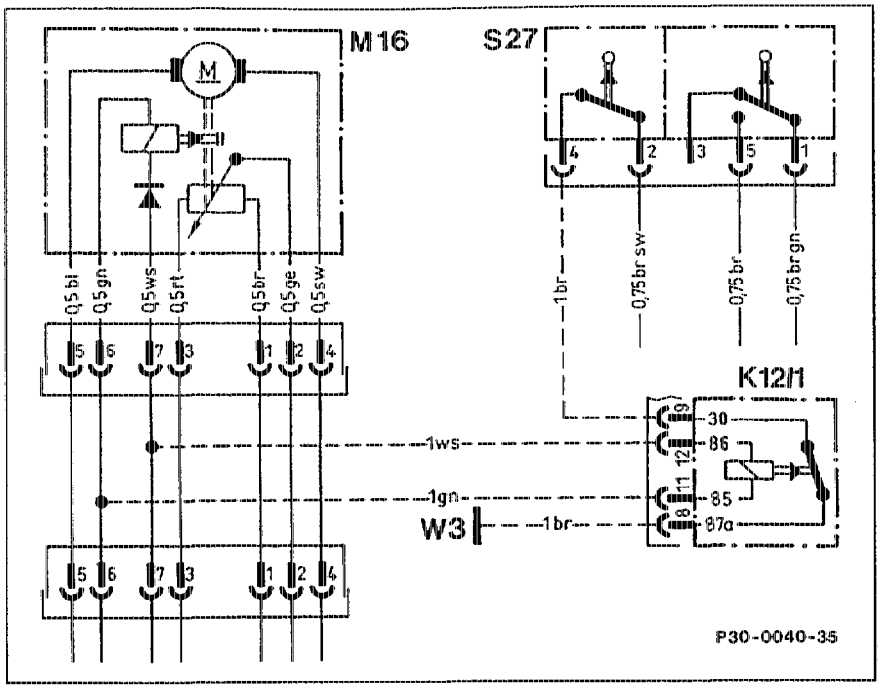

K12/1 Relay, Tempomat/cruise control boost air cut-off
M16 Tempomat/cruise control (TPM) actuator
S27 Boost pressure cut-out microswitch
W3 Ground, left front wheelhouse (at ignition coil)

D. Parts list

Number	Designation	Part No.
1	Relay	001 542 61 19
1	Connector housing, 8fold	009 545 76 28
1	Cover	009 545 77 28
1	Connector housing, 6fold (model 124)	126 545 01 28
1	Connector housing, 12fold (model 201)	126 545 23 28
7	Plug-in sockets dia. 4 mm	010 545 52 28
4	Jack dia. 4 mm	003 545 26 26
1	Jack dia. 2.5 mm	002 545 99 26
1	Screw M6 × 16	000 965 006 015
1	Washer A 6.4	000 125 006 421
1	Nut M6 (201 only)	000 934 006 013
1	Cable shoe dia. 6.3 mm	–
2 m	Line 1 mm^2 green	–
2 m	Line 1 mm^2 white	–
5 m	Line 1 mm^2 brown (124)	–
6 m	Line 1 mm^2 brown (201)	–

Operation no. of operation texts and work units or standard texts and flat rates

A. Procedure models 124 and 201 with engines 102.96/982/985

1 Make harness according to section B.

2 Disconnect ground cable on battery.

3 Remove air cleaner.

4 Screw on holder (1) for relay in wheelhouse by drilling 2 holes (5 mm dia.) in the holder (1) and 2 holes (3.5 mm dia.) in the wheelhouse.

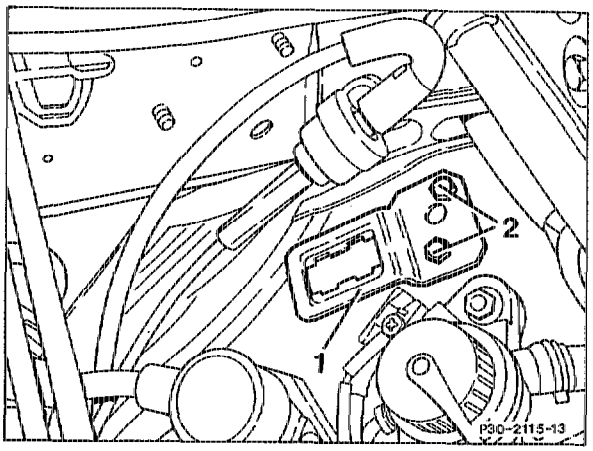

Arrangement model 124
1 Holder
2 Sheet metal screws B 4.2 x 13

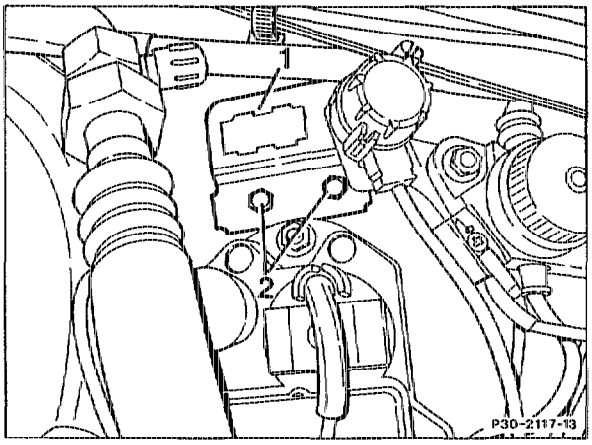

Arrangement model 201
1 Holder
2 Sheet metal screws B 4.2 x 13

5 Unscrew the three fixing screws (arrows) for the throttle control and place throttle control to one side.

6 Screw on holder (3) on the throttle control and fasten throttle control again.

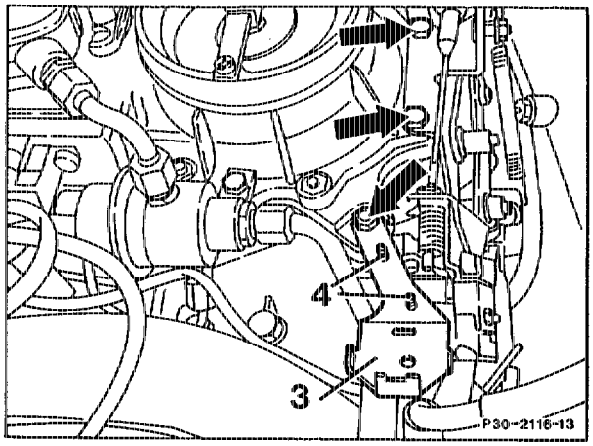

3 Holder
4 Screw M4x10

7 Mount 8-pin intermediate plug of shop-made harness (5) between the connection of Tempomat/cruise control (TPM) actuator (M16x1).

8 Install 6-pin connector of shop-made harness (5) on holder (1) in wheelhouse and clip in.

9 Press deceleration shut-off/Tempomat/cruise control relay (K12) on 6-pin connector of shop-made harness (5) and mount protective cap (6).

10 Re-install shop-made harness (5) on deceleration cut-off microswitch (S27/2).

11 Disconnect connector of production harness from deceleration cut-off microswitch (S27/2) and connect to plug of shop-made harness (5). Then fasten plug connection, KE/Tempomat/cruise control (TPM) (2-pin), (X33/2) on holder (3) with a cable tie (7).

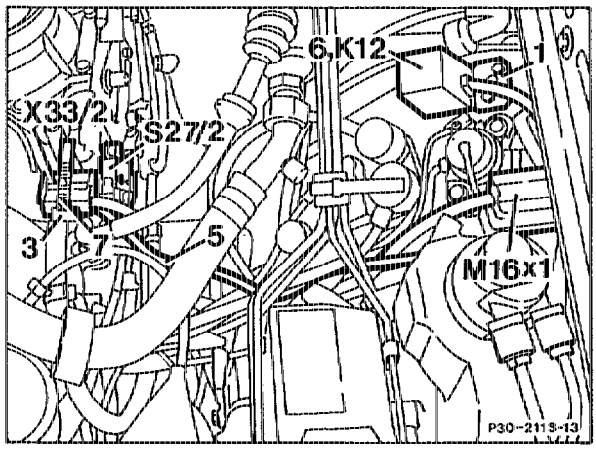

Layout model 124

1	Holder
3	Holder
5	Harness
6	Protective cap
7	Cable tie
K12	Deceleration shut-off/Tempomat/cruise control relay (K12)
M16x1	Plug connection, Tempomat/cruise control (TPM) actuator
S27/2	Deceleration cut-off microswitch
X33/2	Plug connection, KE/Tempomat/cruise control (TPM) (2-pin)

12 Press connector of shop-made harness (5) on to deceleration cut-off microswitch (S27/2).

13 Check adjustment of cruise control connecting rod and adjust if required (30-561).

14 Install air cleaner.

15 Connect ground cable to battery.

16 Perform test drive.

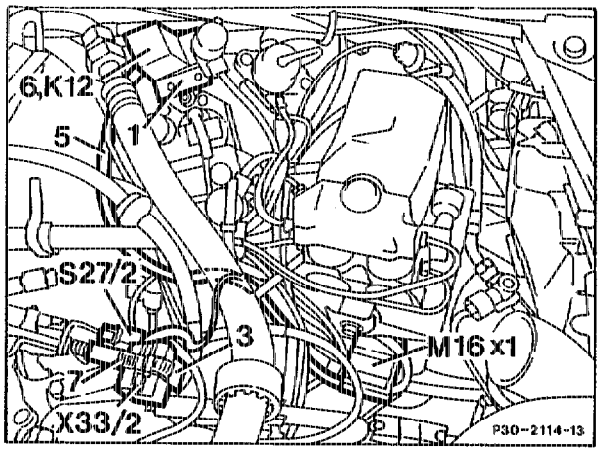

Arrangement model 201

1	Holder
3	Holder
5	Harness
6	Protective cap
7	Cable tie
K12	Deceleration shut-off/Tempomat/cruise control relay
M16x1	Plug connection, Tempomat/cruise control (TPM) actuator
X33/2	Plug connection, KE/Tempomat/cruise control (TPM) (2-pin)

B. Harness and wiring diagram

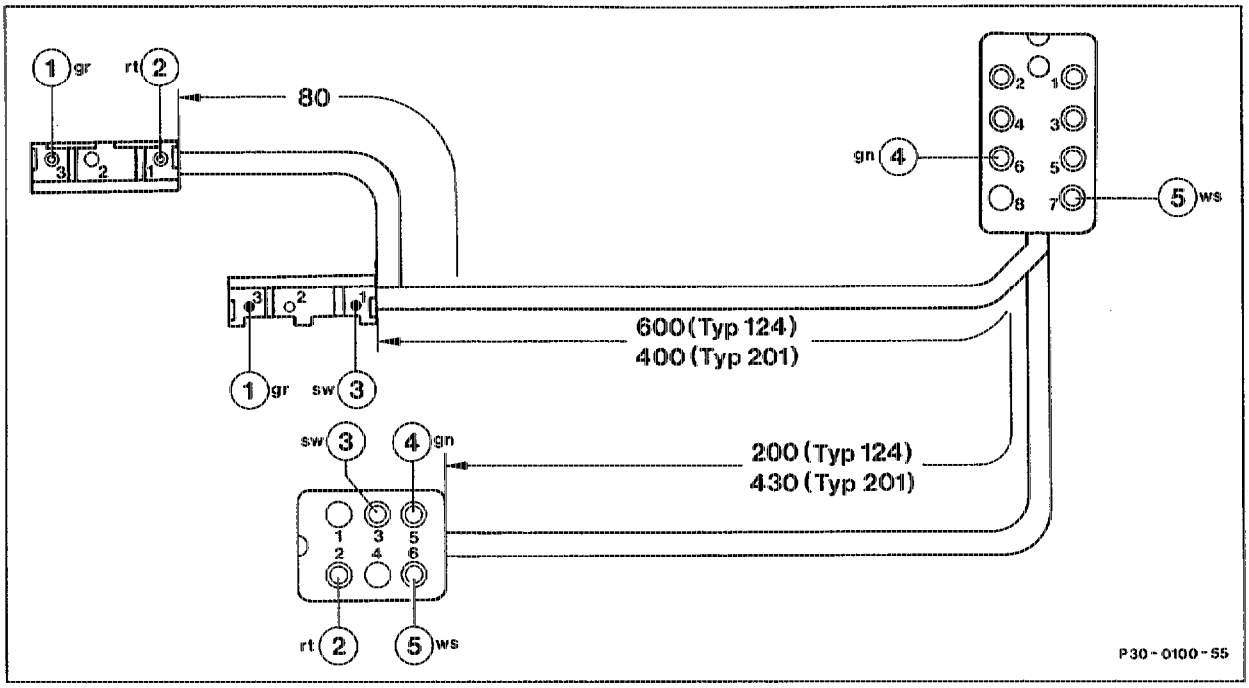

Harness (shop-made) length details in mm

Note
Insert loose plug-in sockets on 8-pin intermediate plug into layouts 1 to 5.

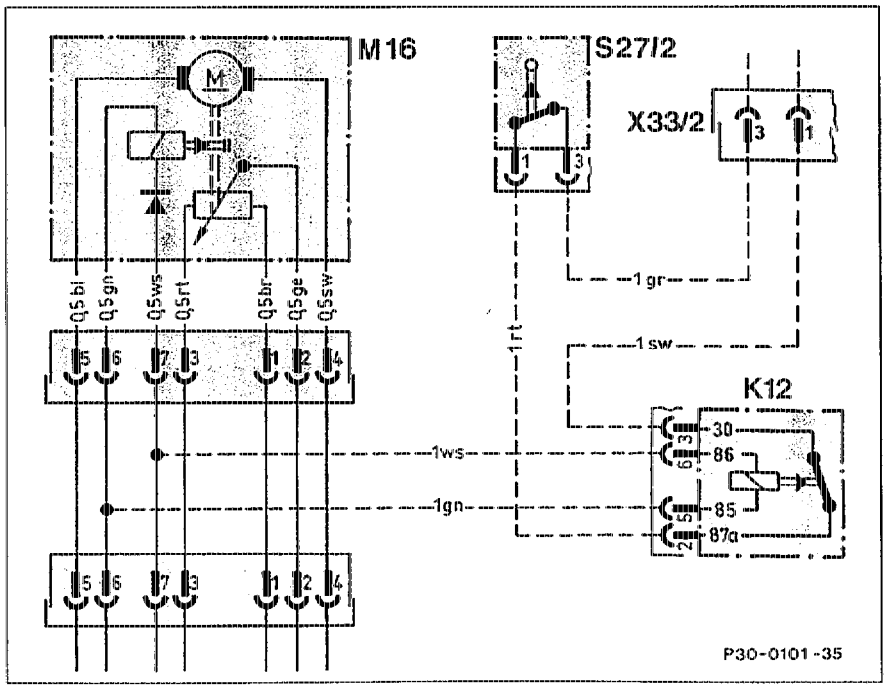

K12 Deceleration shut-off/Tempomat/cruise control relay
M16 Tempomat/cruise control (TPM) actuator
S27/2 Deceleration cut-off microswitch
X33/2 Plug connection, KE/Tempomat/cruise control (TPM) (2-pin)

C. Parts list

Number	Designation	Part no.
1	Relay	001 542 61 19
1	Connector housing, 8-fold	009 545 76 28
1	Cover	009 545 77 28
1	Connector housing, 6-fold	126 545 01 28
1	Connector housing, 3-fold	012 545 07 28
1	Plug-in housing, 3-fold	012 545 65 28
7	Plug-in sockets dia. 4 mm	010 545 52 28
4	Jack dia. 4 mm	003 545 26 26
2	Jack dia. 2.5 mm	002 545 99 26
2	Plug pin dia. 2.5 mm	012 545 58 28
1	Holder	102 159 27 40
1	Holder (model 124)	126 821 07 14
1	Holder (model 201)	123 545 49 40
2	Screw M4x10	000 933 004 030
2	Screw B4.2x13	007 976 004 203
1	Cable tie	001 997 42 90
0.5 m	Cable 1 mm^2 grey	–
1.0 m	Cable 1 mm^2 green	–
1.0 m	Cable 1 mm^2 white	–
1.5 m	Cable 1 mm^2 red	–
1.5 m	Cable 1 mm^2 black	–

Operation no. of the operation texts and work units and standard texts and flat rates .....

A. Model 124

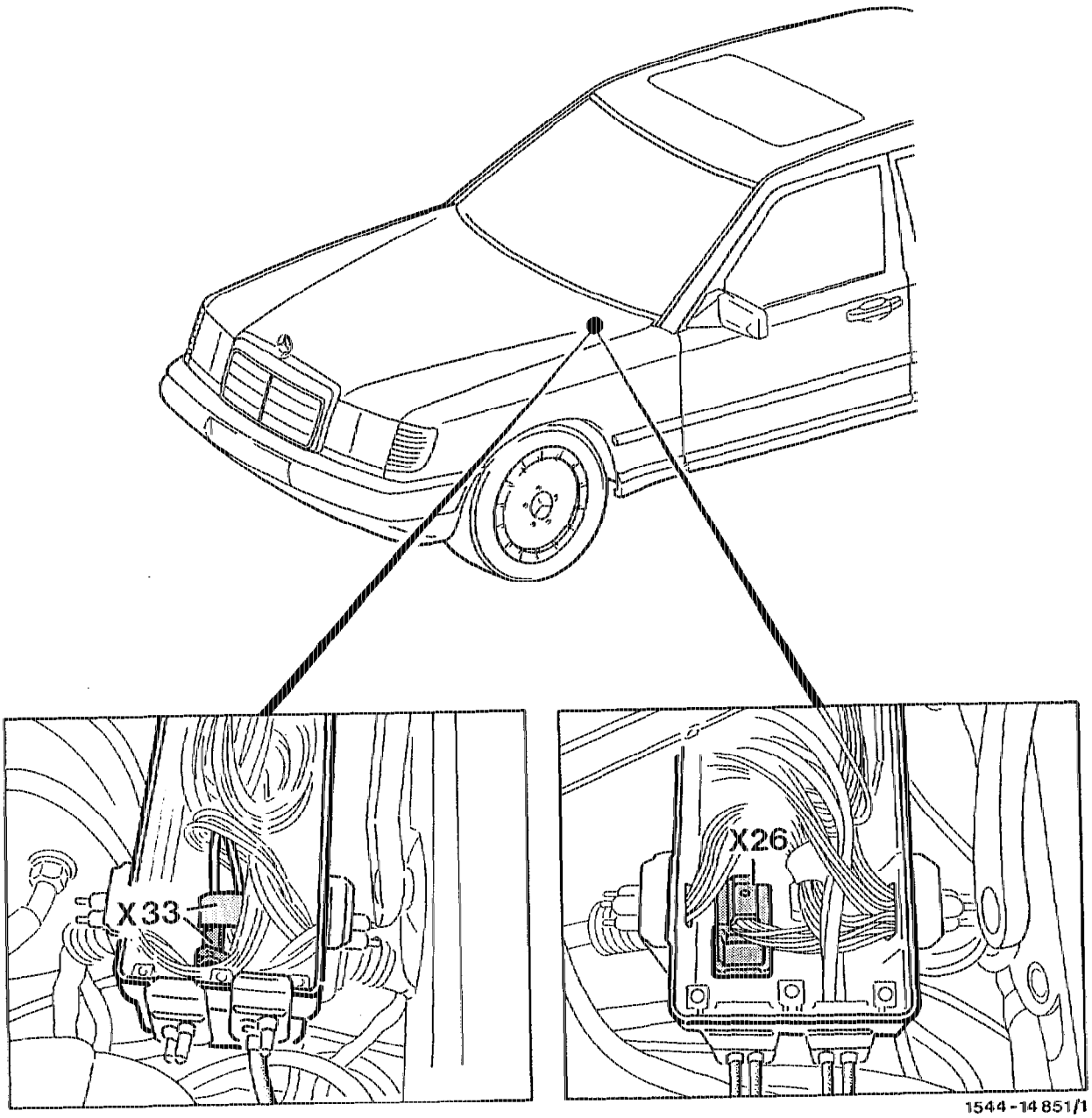

X26	Plug connection, interior/engine 12-pin (4 cylinder models up to approx. 09/88; 6 cylinder models up to approx. 09/87)	X33	Plug connection, KE/Tempomat/cruise control (TPM) (1-pin) (up to approx. 08/85)

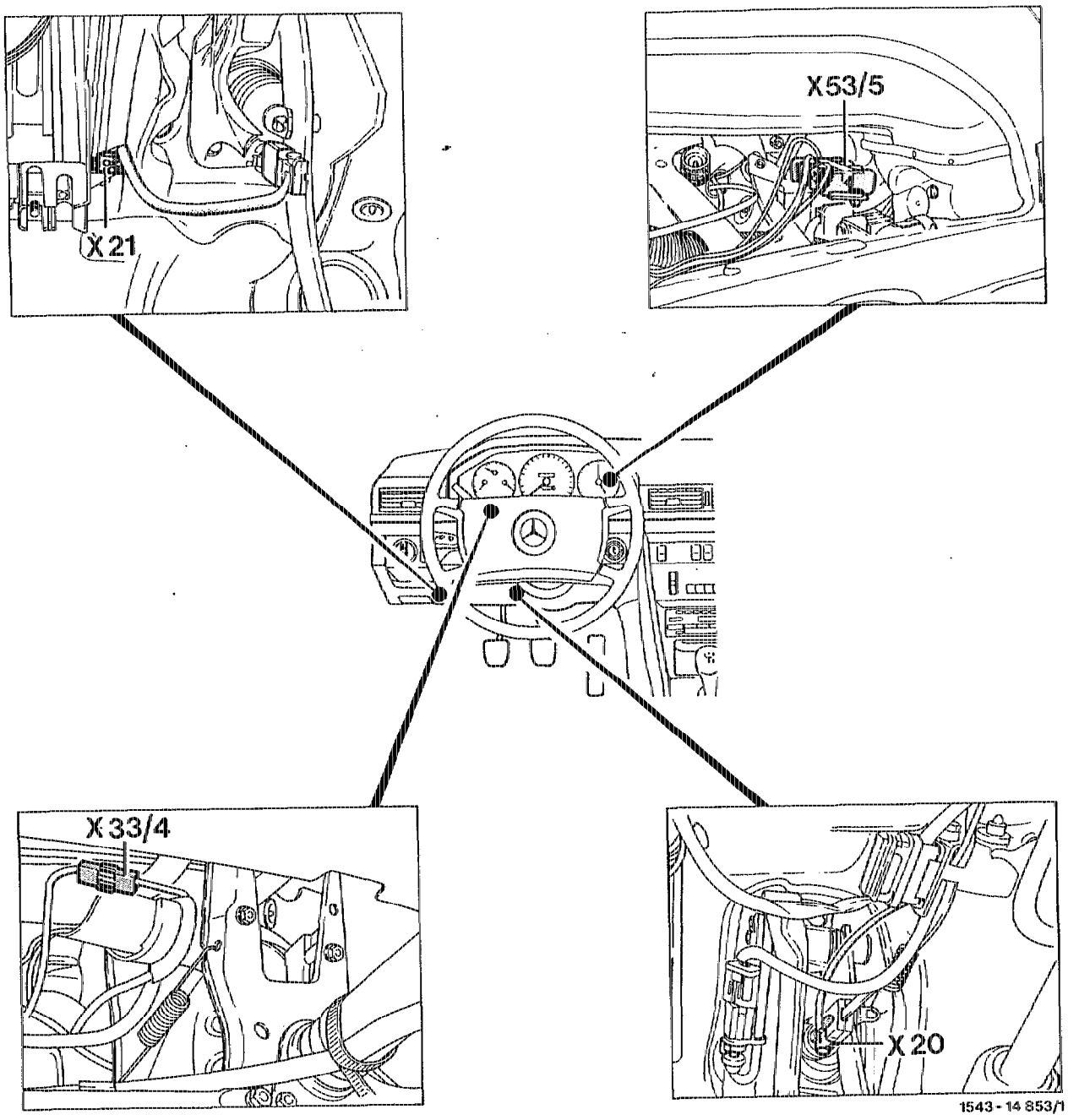

X20	Intermediate plug connector, stop lamp switch (2-pin)	X33/4	Plug connection, clutch switch/Tempomat/cruise control (TPM)
X21	Multi-point plug connection, stop lamp switch [1]	X53/5	Multi-point plug connection, Hall-effect sensor/road speed signal [1]

[1] Only if the corresponding signal is required for several optional extras.

B. Model 129

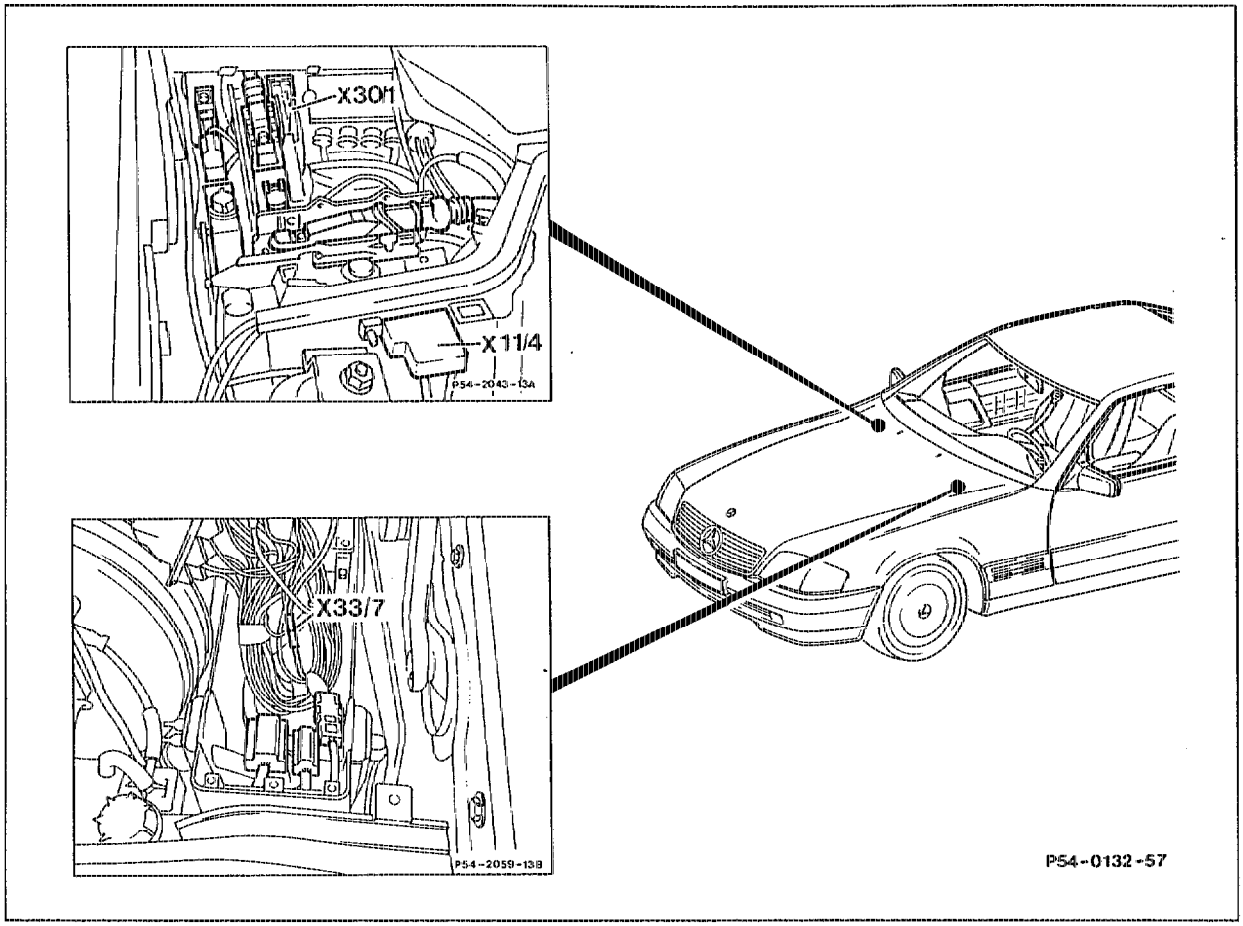

X30/1	Plug connection, multi-function block, refer to connecting diagram, group 00 for other systems	X33/7	Plug connection, Tempomat/cruise control (TPM), feed terminal 15 (1-pin)

C. Model 201

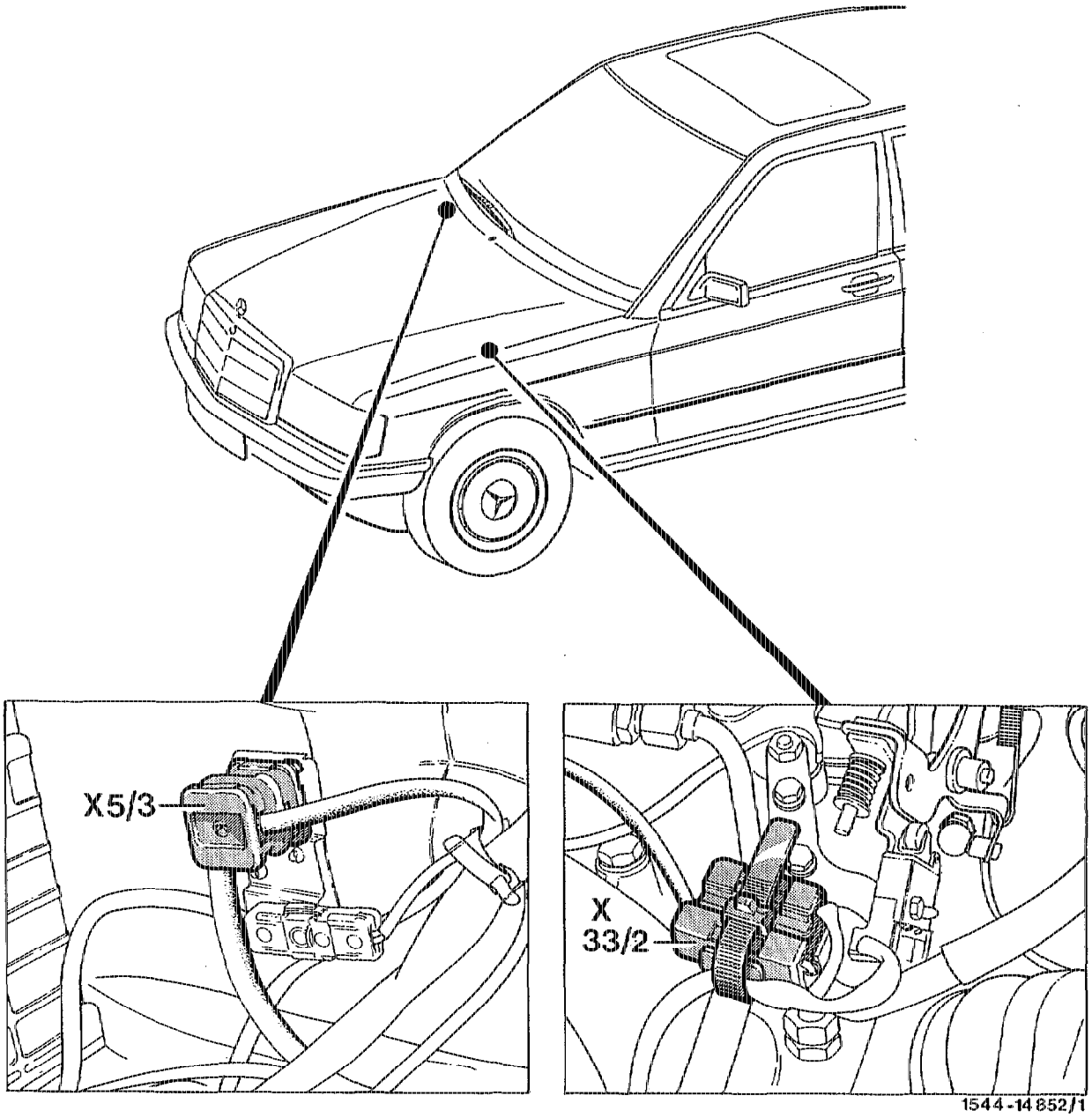

X5/3	Plug connection, interior/A/C compressor harness	X33/2	Plug connection, KE/Tempomat/cruise control (TPM) (2-pin)

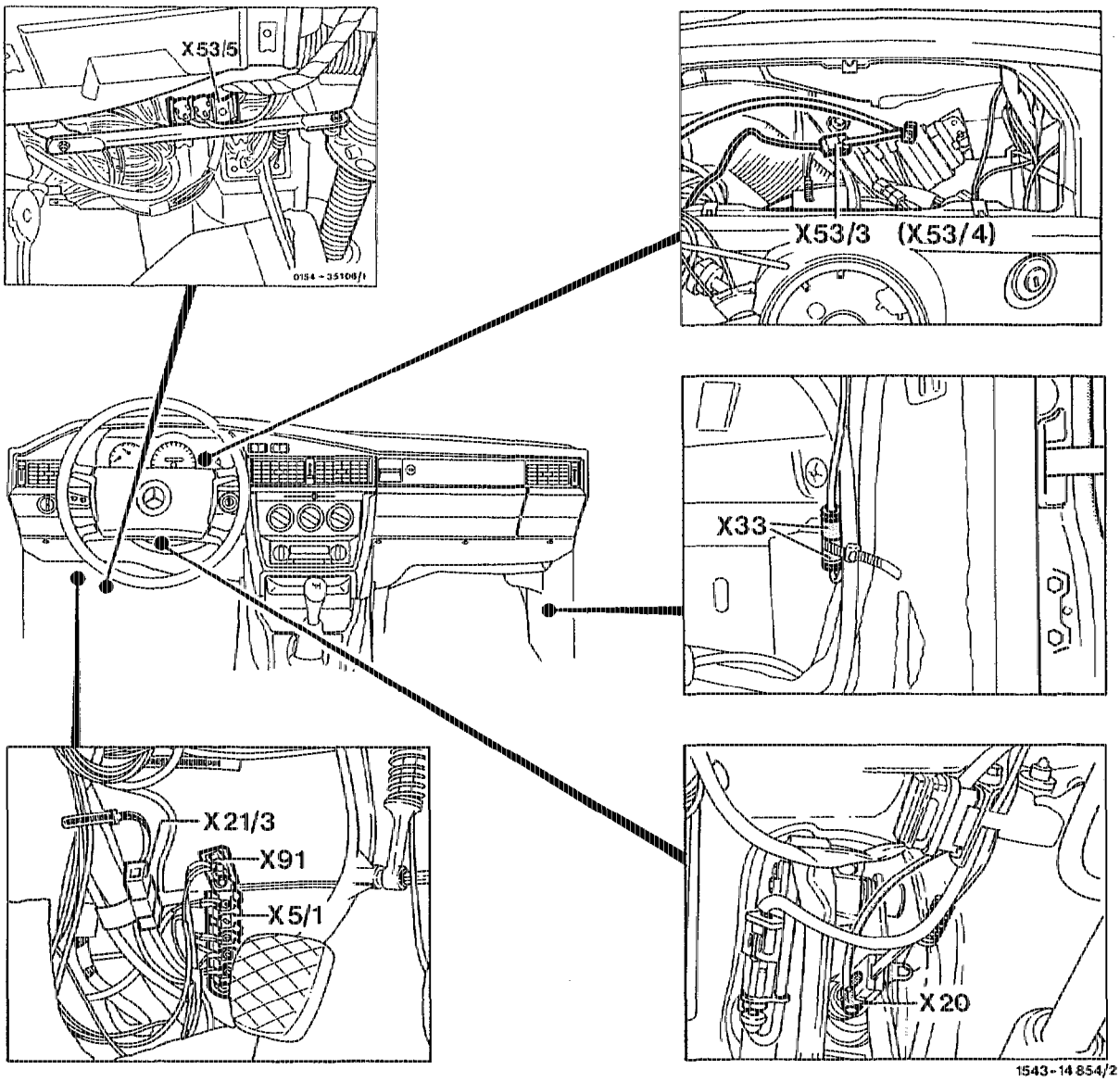

X5/1	Terminal block, interior	X53/3	Plug connection, Hall-effect sensor/ARF (1-pin)
X20	Intermediate plug connector, stop lamp switch (2-pin)	X53/4	Plug connection, inductive sensor/ARF (2-pin)
X21/3	Terminal block, stop lamp switch/Tempomat/cruise control (TPM) (1-pin)	X53/5	Multi-point plug connection, Hall-effect sensor/road speed signal
X33	Plug connection, KE/Tempomat/cruise control (TPM) (1-pin)	X91	Terminal block, clutch pedal/Tempomat/cruise control (TPM) (1-pin)

A. General

These repair instructions only include wiring diagrams for the models 124 and 201 up to 08/89 or model year 89. Wiring diagrams for models 129 and 140 as of 09/89 or model year 90, refer to the file "Electric wiring diagrams".

A new cruise control amplifier with reference resistor is installed in the models 201.029/128. On the other models it will be phased in.

The new cruise control amplifier has no influence on the cabling and therefore also not on the wiring diagrams.

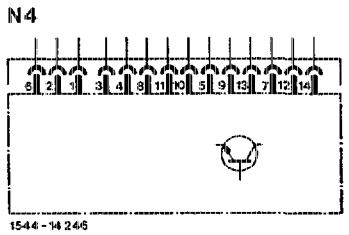

N4 Cruise control amplifier

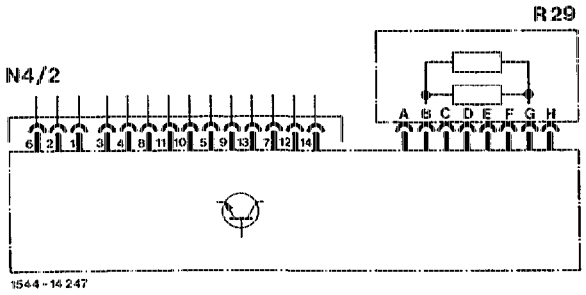

N4/2 Cruise control amplifier with reference resistor
R29 Cruise control reference resistor

B. Model 124 with automatic transmission

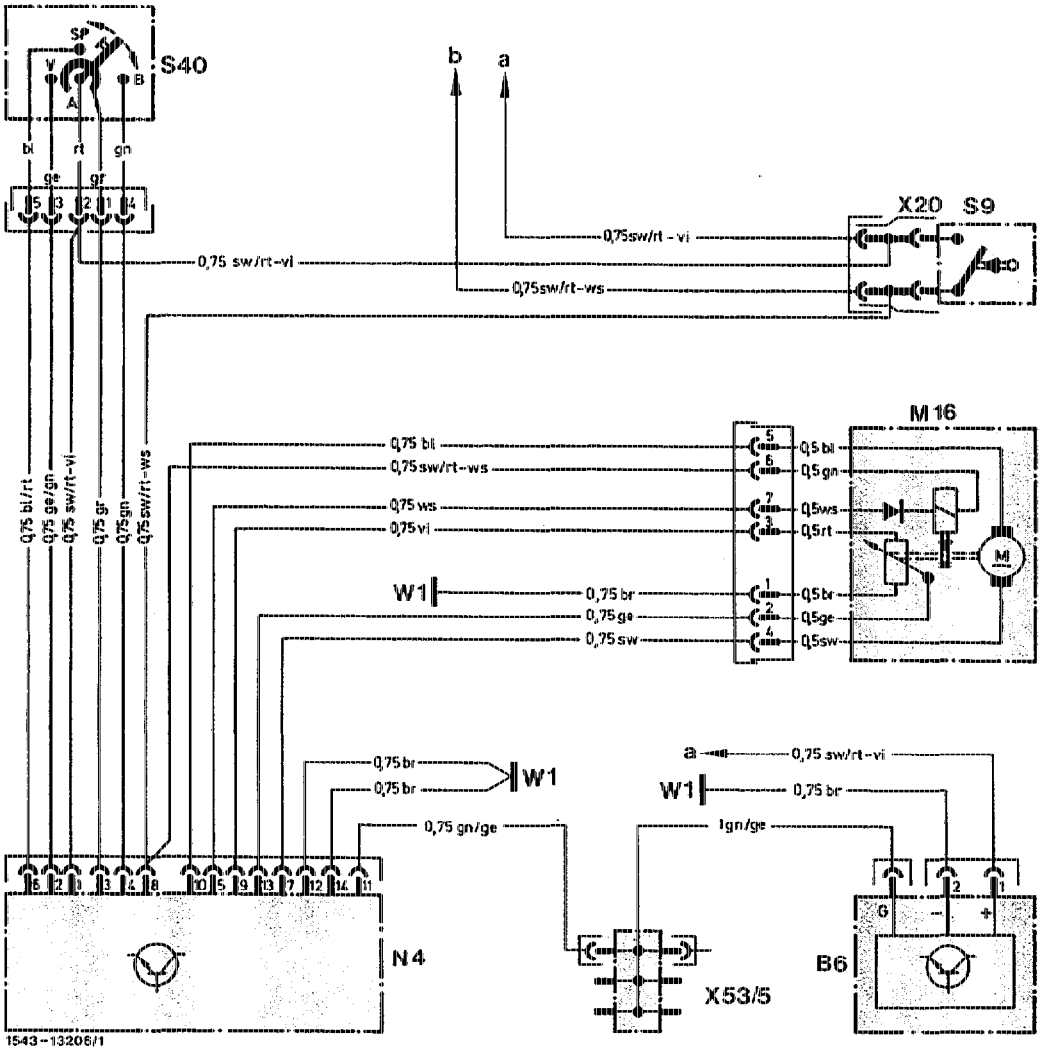

Models

124.020/080/120/180, 124.125/130 up to vehicle ident. end no. A 087383 (except USA)

124.133/193/333/393 up to approx. 08/88

B6	Hall-effect speed sensor
M16	Cruise control actuator
N4	Cruise control amplifier
S9	Stop lamp switch
S40	Cruise control switch
	V Decelerate/set
	B Accelerate/set
	SB Resume
	A Off
W1	Main ground (behind instrument cluster)
X20	Connector, stop lamp switch
X53/5	Multipoint connector, Hall-effect sensor
a	On fuse 5 terminal 15
b	On N7 lamp monitoring device, line-up 15

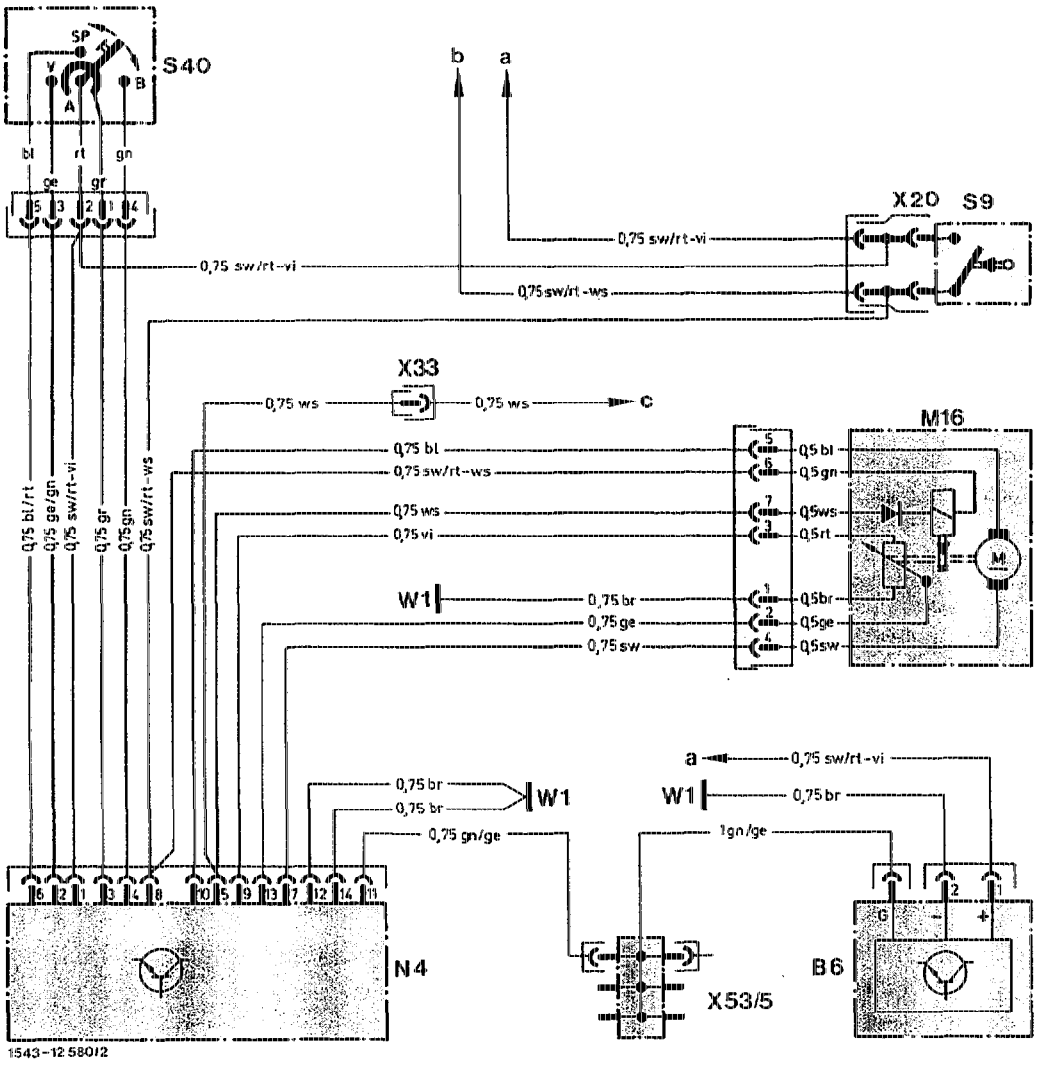

Models 124.023/026/03 up to approx. end of 08/85

B6	Hall-effect speed sensor	W1	Main ground (behind instrument cluster)
M16	Cruise control actuator	X20	Connector, stop lamp switch
N4	Cruise control amplifier	X33	Connector, CIS-E/cruise control (1 pole)
S9	Stop lamp switch	X53/5	Multipoint connector, Hall-effect sensor
S40	Cruise control switch	a	On fuse 5 terminal 15
	V Decelerate/set	b	On N7 lamp monitoring device, line-up 15
	B Accelerate/set	c	On N3 control unit injection system line-up 6
	SB Resume		
	A Off		

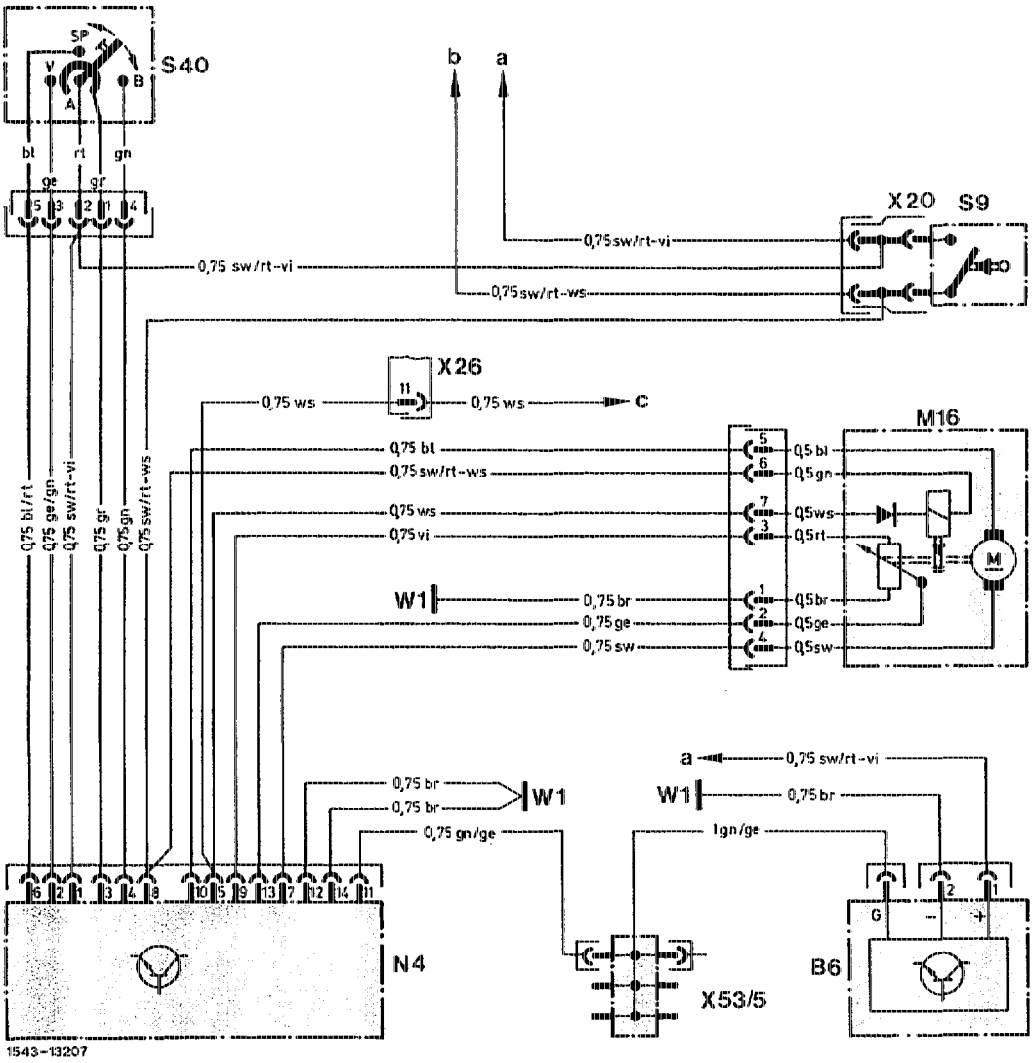

Models

124.021/23 as of approx. 09/85 RÜF/CAT up to approx. 08/88,

124.026/03 as of approx. 09/85 RÜF/CAT up to approx. 08/87,

124.043/083 RÜF/CAT up to approx. 08/88, 124.090 and 124.2 RÜF/CAT up to approx. 08/87

B6	Hall-effect speed sensor	W1	Main ground (behind instrument cluster)
M16	Cruise control actuator	X20	Connector, stop lamp switch
N4	Cruise control amplifier	X26	Connector interior/engine, 12-pole
S9	Stop lamp switch	X53/5	Multipoint connector, Hall-effect sensor
S40	Cruise control switch	a	On fuse 5 terminal 15
	V Decelerate/set	b	On N7 lamp monitoring device, line-up 15
	B Accelerate/set	c	On N3 control unit injection system line-up 6
	SB Resume		
	A Off		

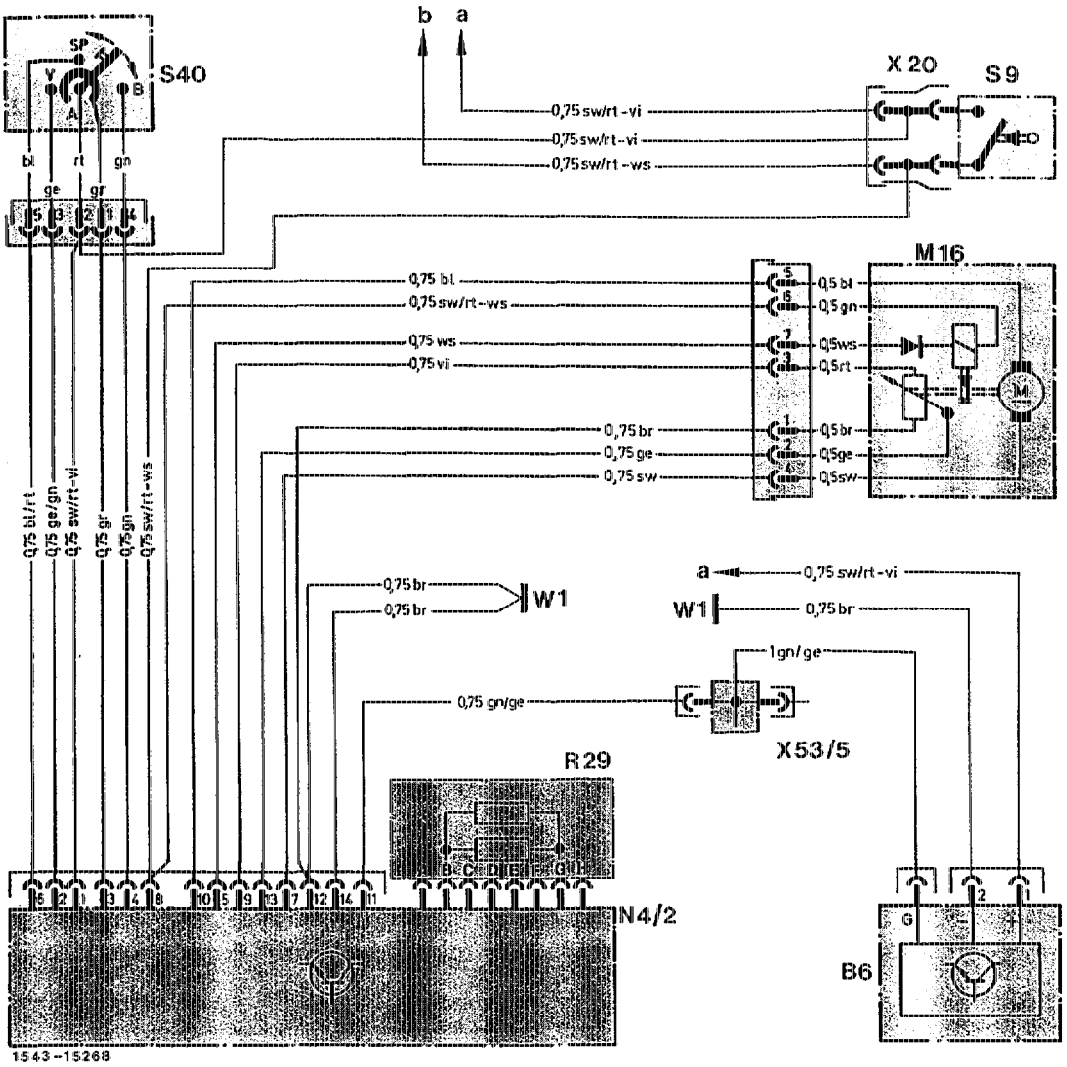

Models

124.021/023/043/083 RÜF/CAT as of approx. 09/88, 124.026/03/09 and 124.2 RÜF/CAT as of approx. 09/87, 124.128/133/193/333/393 as of approx. 09/88 up to 08/89

B6	Hall-effect speed sensor	W1	Main ground (behind instrument cluster)
M16	Cruise control actuator	X20	Connector, stop lamp switch
N4/2	Cruise control amplifier with reference resistor	X53/5	Multipoint connector, Hall-effect sensor
R29	Cruise control reference resistor	a	On fuse 5 terminal 15
S9	Stop lamp switch	b	On N7 lamp monitoring device, line-up 15
S40	Cruise control switch		
	V Decelerate/set		
	B Accelerate/set		
	SB Resume		
	A Off		

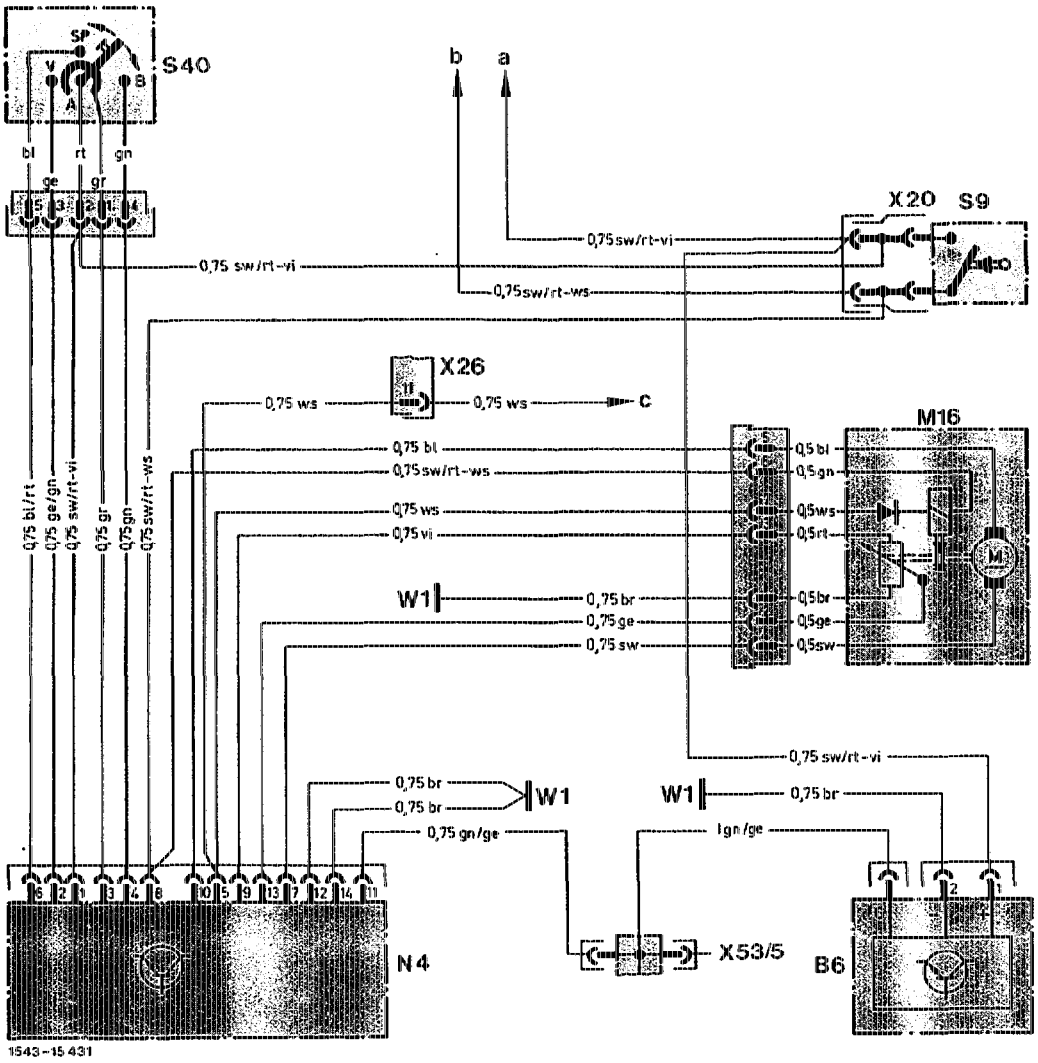

Models 124.026/030 (USA) 1986, 1987

B6	Hall-effect speed sensor
M16	Cruise control actuator
N4	Cruise control amplifier
S9	Stop lamp switch
S40	Cruise control switch
	V Decelerate/set
	B Accelerate/set
	SB Resume
	A Off
W1	Main ground (behind instrument cluster)
X20	Connector, stop lamp switch
X26	Connector interior/engine, 12-pole
X53/5	Multipoint connector, Hall-effect sensor
a	On fuse 5 terminal 15
b	On N7 lamp monitoring device, line-up 15
c	On N3 control unit injection system line-up 6

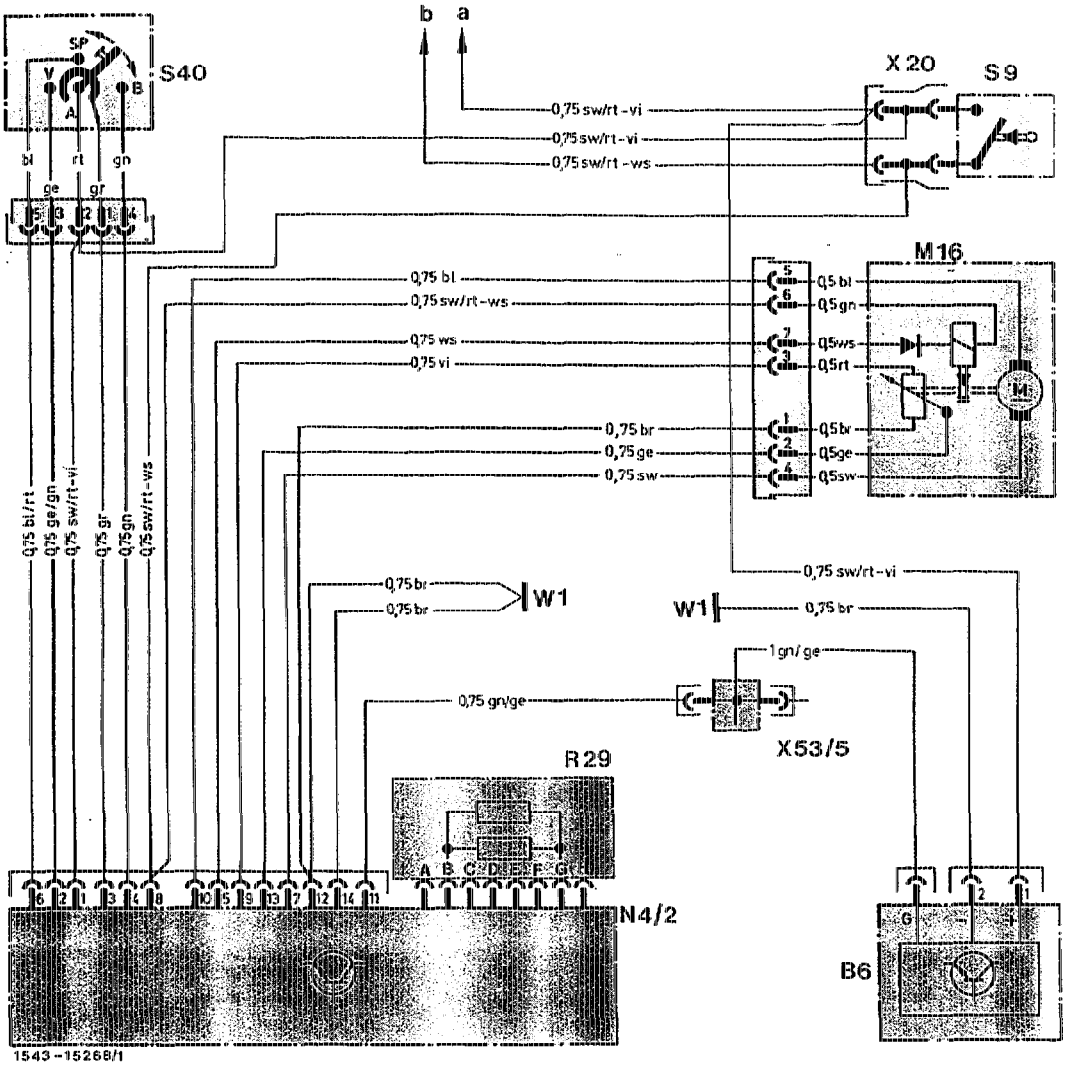

Models 124.026/030/050/090 (USA) as of 1988

B6	Hall-effect speed sensor	W1	Main ground (behind instrument cluster)
M16	Cruise control actuator	X20	Connector, stop lamp switch
N4/2	Cruise control amplifier with reference resistor	X26	Connector interior/engine, 12-pole
R29	Cruise control reference resistor	X53/5	Multipoint connector, Hall-effect sensor
S9	Stop lamp switch	a	On fuse 5 terminal 15
S40	Cruise control switch	b	On N7 lamp monitoring device, line-up 15
	V Decelerate/set	c	On N3 control unit injection system line-up 6
	B Accelerate/set		
	SB Resume		
	A Off		

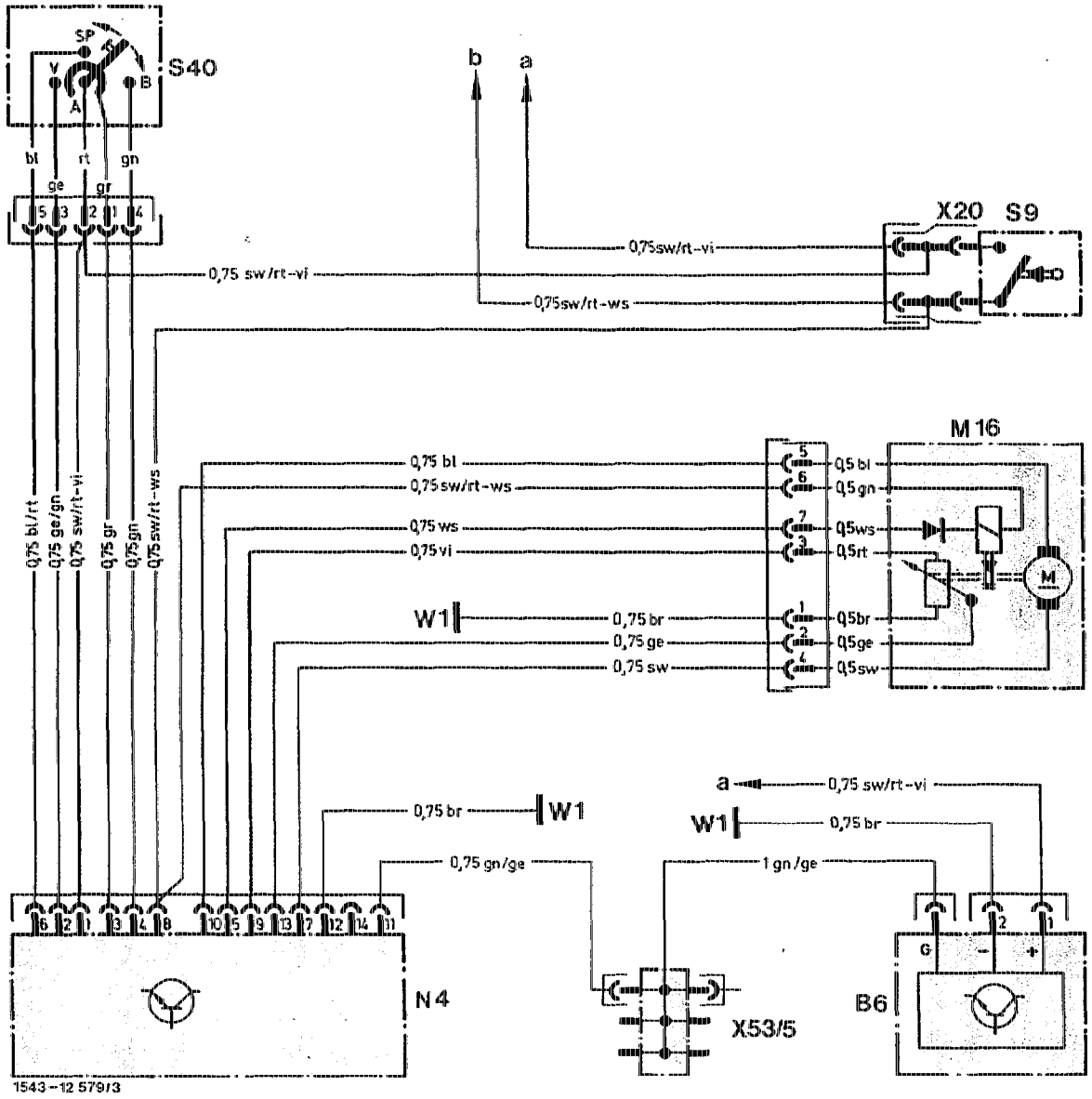

Models 124.125/130 as of vehicle ident. end no. A 187384 and models 124.185/190/330

B6	Hall-effect speed sensor	W1	Main ground (behind instrument cluster)
M16	Cruise control actuator	X20	Connector, stop lamp switch
N4	Cruise control amplifier	X53/5	Multipoint connector, Hall-effect sensor
S9	Stop lamp switch	a	On fuse 5 terminal 15
S40	Cruise control switch	b	On N7 lamp monitoring device, line-up 15
	V Decelerate/set		
	B Accelerate/set		
	SB Resume		
	A Off		

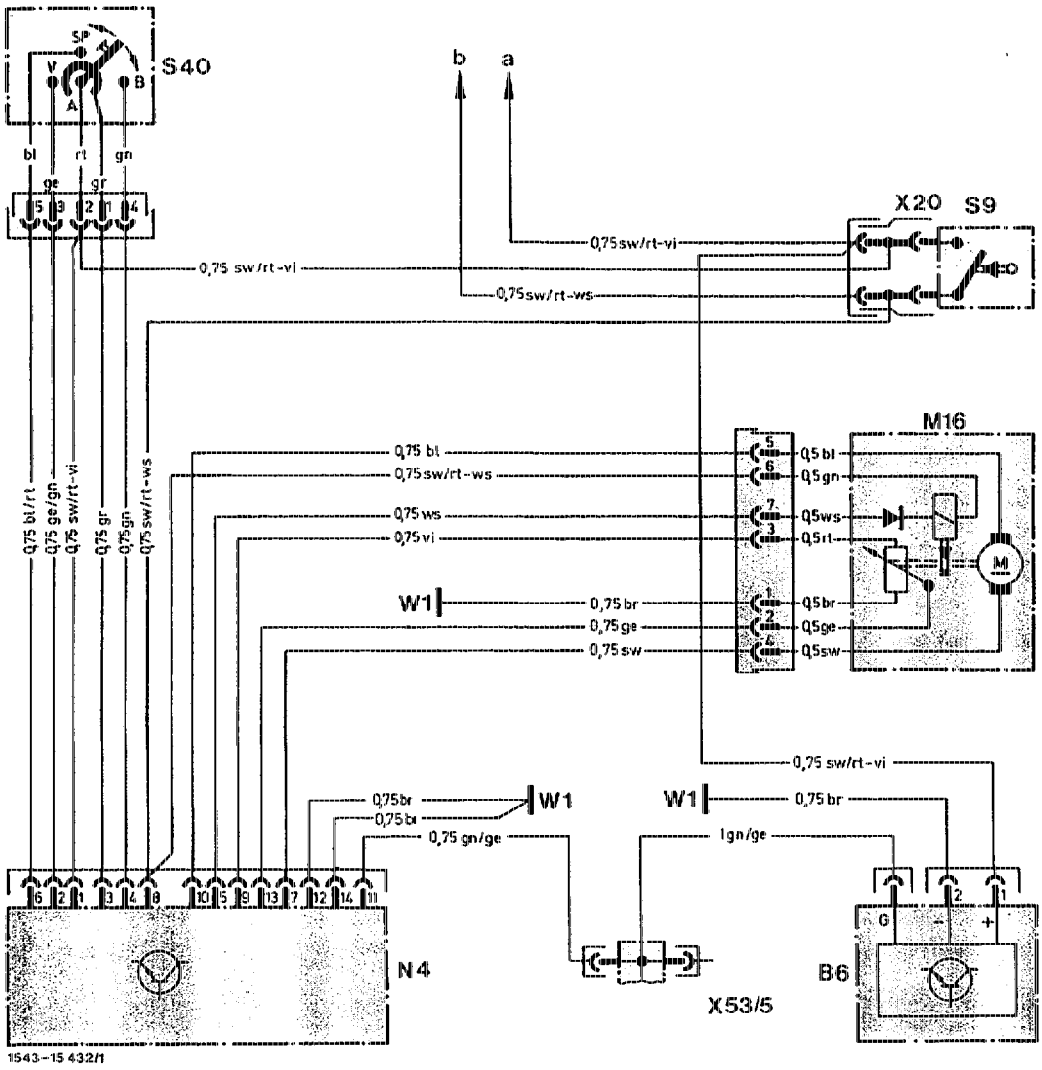

Models 124.133/193 (USA) 1987

B6	Hall-effect speed sensor
M16	Cruise control actuator
N4	Cruise control amplifier
S9	Stop lamp switch
S40	Cruise control switch
	V Decelerate/set
	B Accelerate/set
	SB Resume
	A Off
W1	Main ground (behind instrument cluster)
X20	Connector, stop lamp switch
X53/5	Multipoint connector, Hall-effect sensor
a	On fuse 5 terminal 15
b	On N7 lamp monitoring device, line-up 15

C. Model 124 with manual transmission

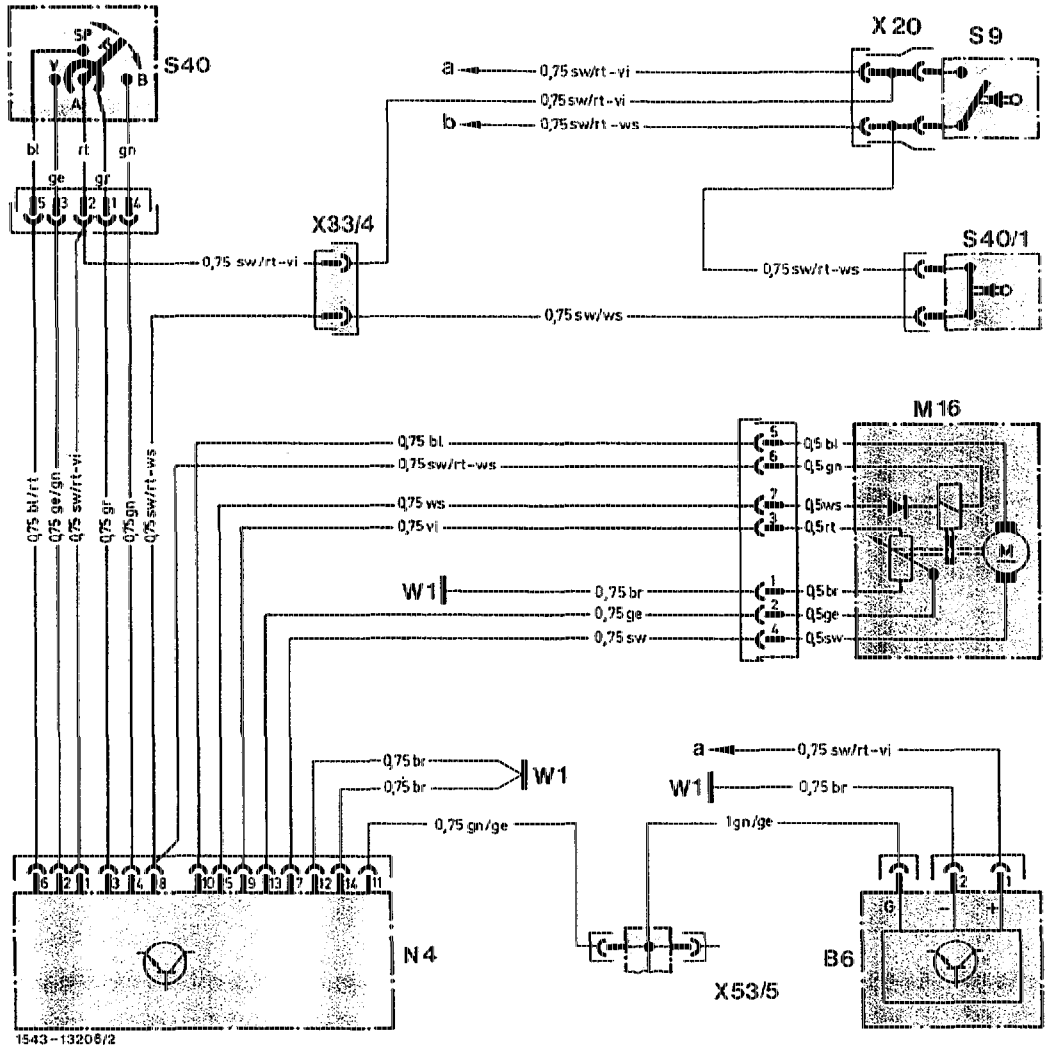

Model 124.020 (ZA)

B6	Hall-effect speed sensor
M16	Cruise control actuator
N4	Cruise control amplifier
S9	Stop lamp switch
S40	Cruise control switch
	V Decelerate/set
	B Accelerate/set
	SB Resume
	A Off
S40/1	Clutch pedal switch (cruise control)
W1	Main ground (behind instrument cluster)
X20	Connector, stop lamp switch
X33/4	Connector, cruise control (manual transmission, 2-pole)
X53/5	Multipoint connector, Hall-effect sensor
a	On fuse 5 terminal 15
b	On N7 lamp monitoring device, line-up 15

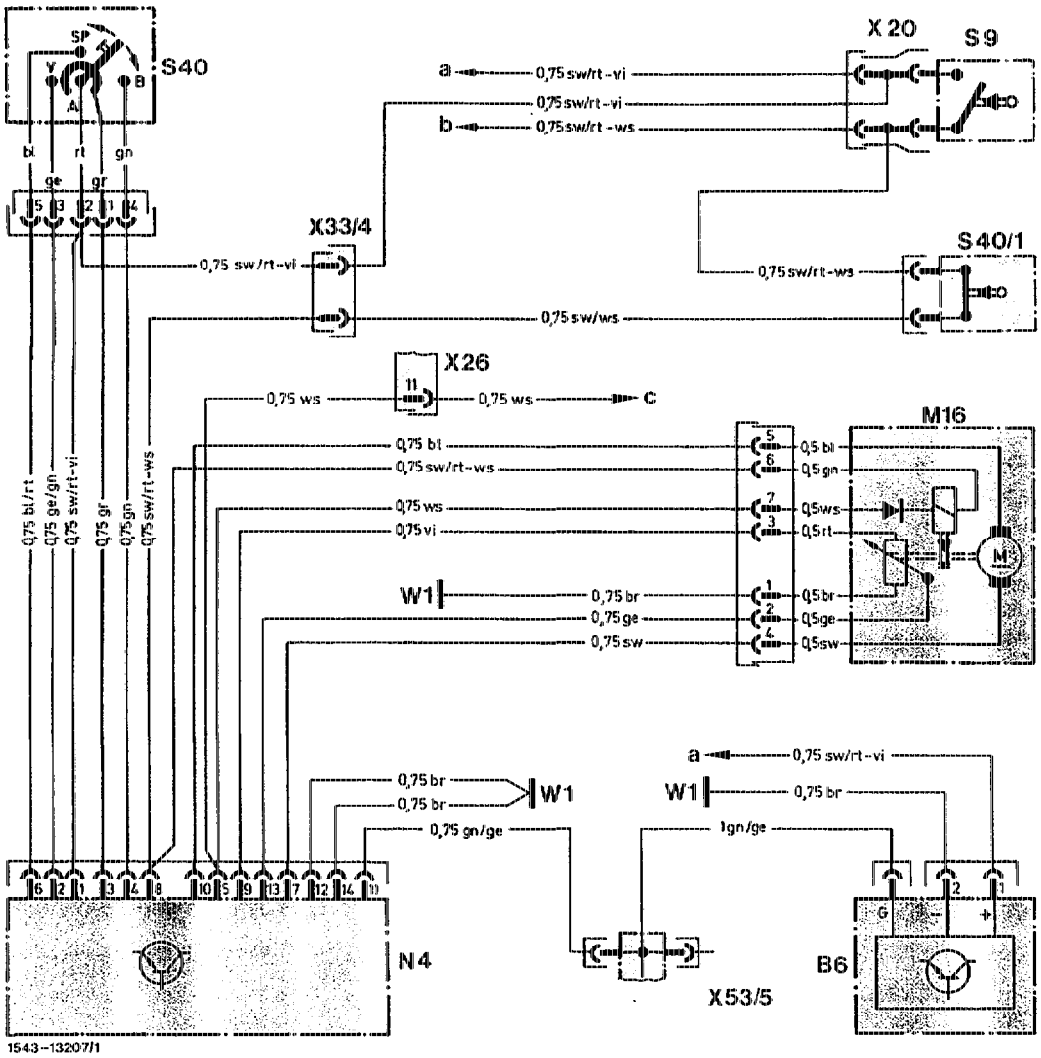

Model 124.023/026/030 (ZA)

B6	Hall-effect speed sensor
M16	Cruise control actuator
N4	Cruise control amplifier
S9	Stop lamp switch
S40	Cruise control switch
	V Decelerate/set
	B Accelerate/set
	SB Resume
	A Off
S40/1	Clutch pedal switch (cruise control)
W1	Main ground (behind instrument cluster)
X20	Connector, stop lamp switch
X26	Connector interior/engine, 12-pole
X33/4	Connector, cruise control (manual transmission, 2-pole)
X53/5	Multipoint connector, Hall-effect sensor
a	On fuse 5 terminal 15
b	On N7 lamp monitoring device, line-up 15
c	On N3 control unit injection system line-up 6

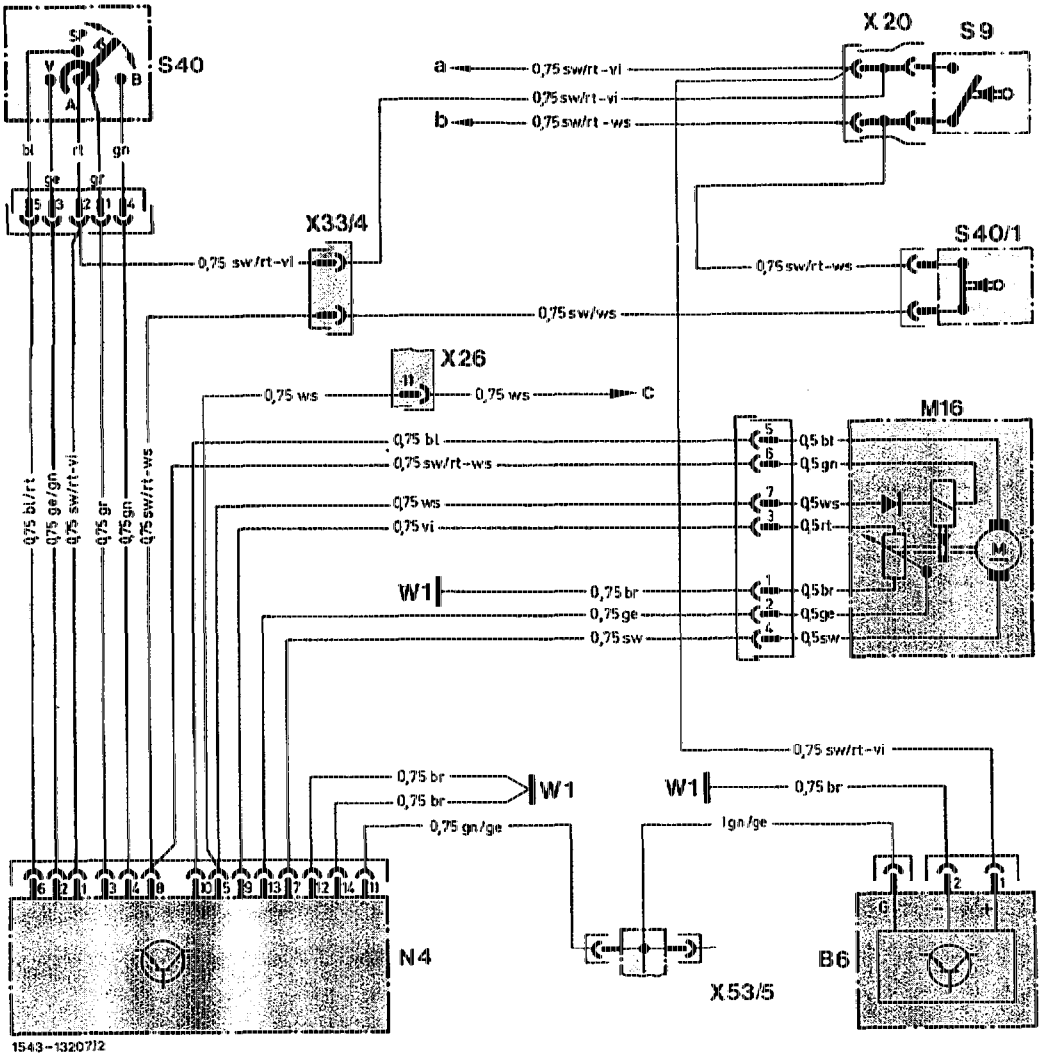

Model 124.026/030 (USA) 1986, 1987

B6	Hall-effect speed sensor
M16	Cruise control actuator
N4	Cruise control amplifier
S9	Stop lamp switch
S40	Cruise control switch
	V Decelerate/set
	B Accelerate/set
	SB Resume
	A Off
S40/1	Clutch pedal switch (cruise control)
W1	Main ground (behind instrument cluster)
X20	Connector, stop lamp switch
X26	Connector interior/engine, 12-pole
X33/4	Connector, cruise control (manual transmission, 2-pole)
X53/5	Multipoint connector, Hall-effect sensor
a	On fuse 5 terminal 15
b	On N7 lamp monitoring device, line-up 15
c	On N3 control unit injection system line-up 6

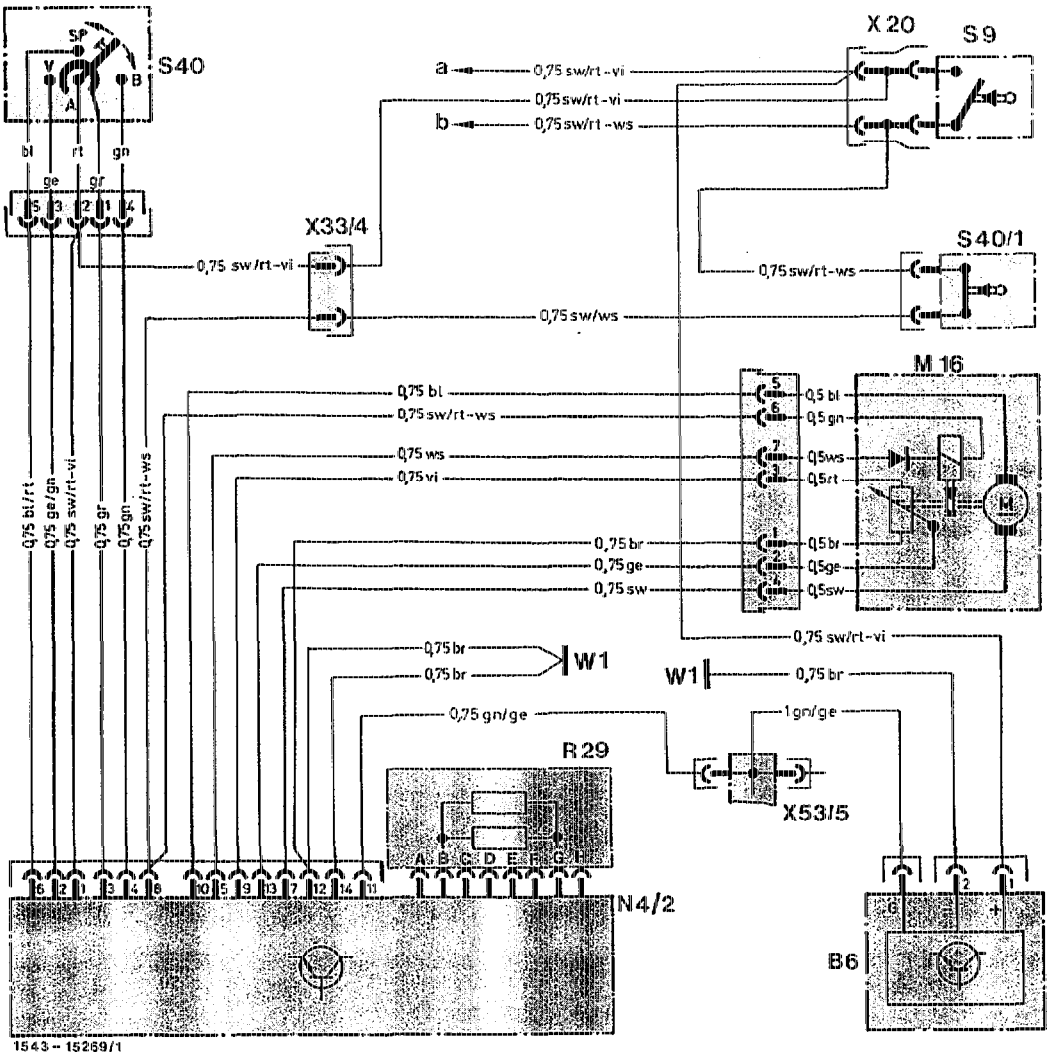

Model 124.026/030 (USA) 1988

B6	Hall-effect speed sensor
M16	Cruise control actuator
N4/2	Cruise control amplifier with reference resistor
R29	Cruise control reference resistor
S9	Stop lamp switch
S40	Cruise control switch
	V Decelerate/set
	B Accelerate/set
	SB Resume
	A Off
S40/1	Clutch pedal switch (cruise control)
W1	Main ground (behind instrument cluster)
X20	Connector, stop lamp switch
X26	Connector interior/engine, 12-pole
X33/4	Connector, cruise control (manual transmission, 2-pole)
X53/5	Multipoint connector, Hall-effect sensor
a	On fuse 5 terminal 15
b	On N7 lamp monitoring device, line-up 15
c	On N3 control unit injection system line-up 6

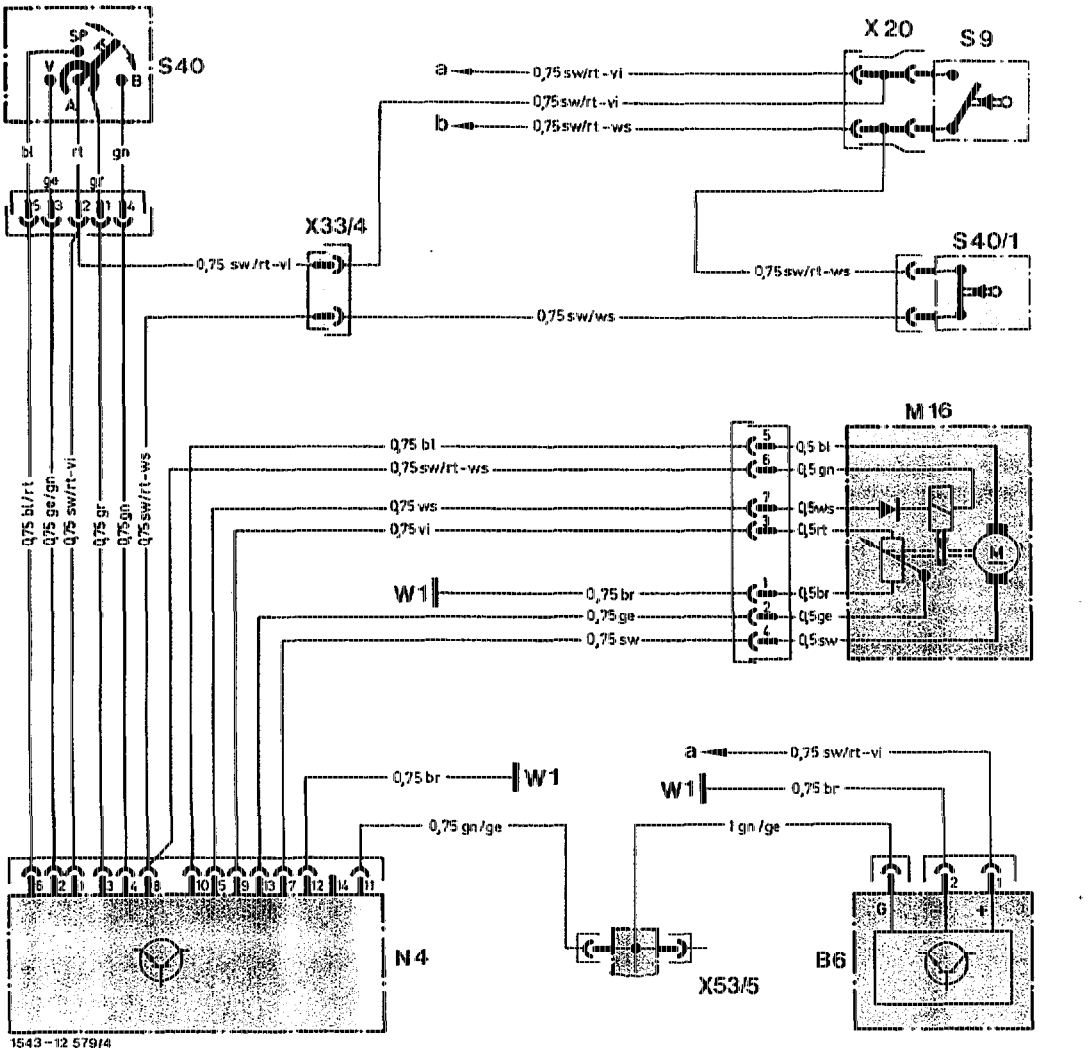

Model 124.130 (ZA)

B6	Hall-effect speed sensor
M16	Cruise control actuator
N4	Cruise control amplifier
S9	Stop lamp switch
S40	Cruise control switch
	V Decelerate/set
	B Accelerate/set
	SB Resume
	A Off
S40/1	Clutch pedal switch (cruise control)
W1	Main ground (behind instrument cluster)
X20	Connector, stop lamp switch
X33/4	Connector, cruise control (manual transmission, 2-pole)
X53/5	Multipoint connector, Hall-effect sensor
a	On fuse 5 terminal 15
b	On N7 lamp monitoring device, line-up 15

D. Model 201 with carburetor

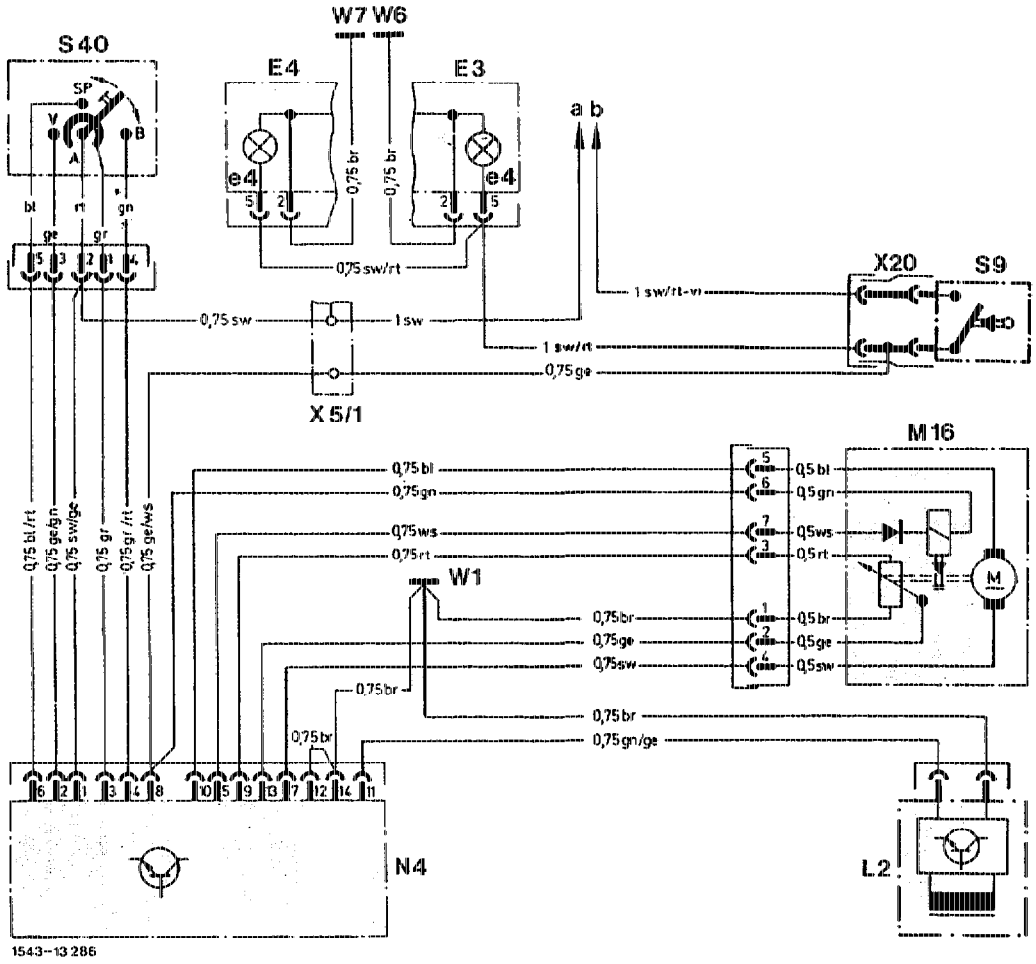

Model 201.022/023 up to approx. 08/85

E3	Left tail lamp unit
E3e4	Stop lamp
E4	Right tail lamp unit
E4e4	Stop lamp
L2	Road speed sensor
M16	Cruise control actuator
N4	Cruise control amplifier
S9	Stop lamp switch
S40	Cruise control switch
	V Decelerate/set
	B Accelerate/set
	SB Resume
	A Off
W1	Main ground (behind instrument cluster)
W6	Ground, left rear wheelhouse in trunk
W7	Ground, right rear wheelhouse in trunk
X5/1	Terminal block, interior (5-pole)
X20	Connector, stop lamp switch
a	On electrical center, coupling field L, line-up 1
b	On electrical center, coupling field C, line-up 1

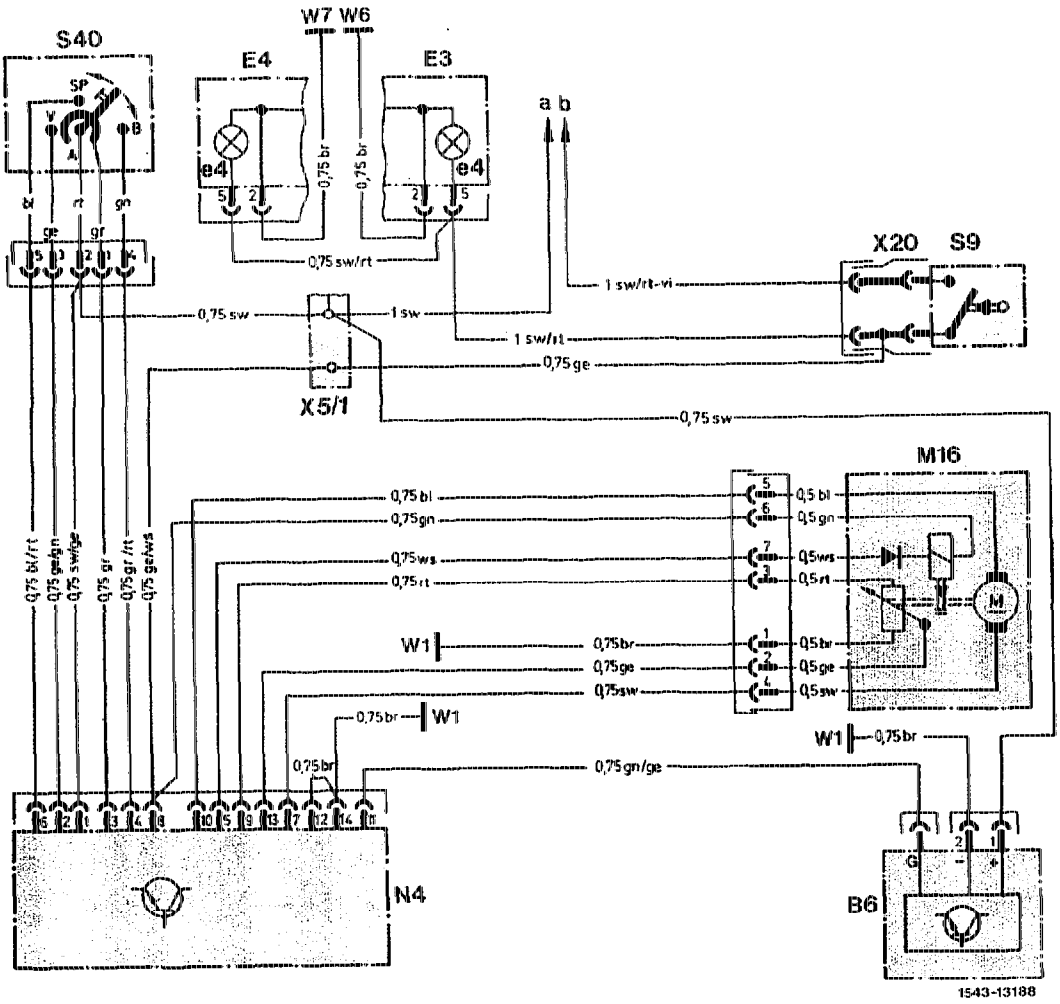

Model 201.023 as of 09/85 up to vehicle ident. end no. A 313825/F 229814

B6	Hall-effect speed sensor
E3	Left tail lamp unit
E3e4	Stop lamp
E4	Right tail lamp unit
E4e4	Stop lamp
M16	Cruise control actuator
N4	Cruise control amplifier
S9	Stop lamp switch
S40	Cruise control switch
	V Decelerate/set
	B Accelerate/set
	SB Resume
	A Off
W1	Main ground (behind instrument cluster)
W6	Ground, left rear wheelhouse in trunk
W7	Ground, right rear wheelhouse in trunk
X5/1	Terminal block, interior (5-pole)
X20	Connector, stop lamp switch
a	On electrical center, coupling field L, line-up 1
b	On electrical center, coupling field C, line-up 1

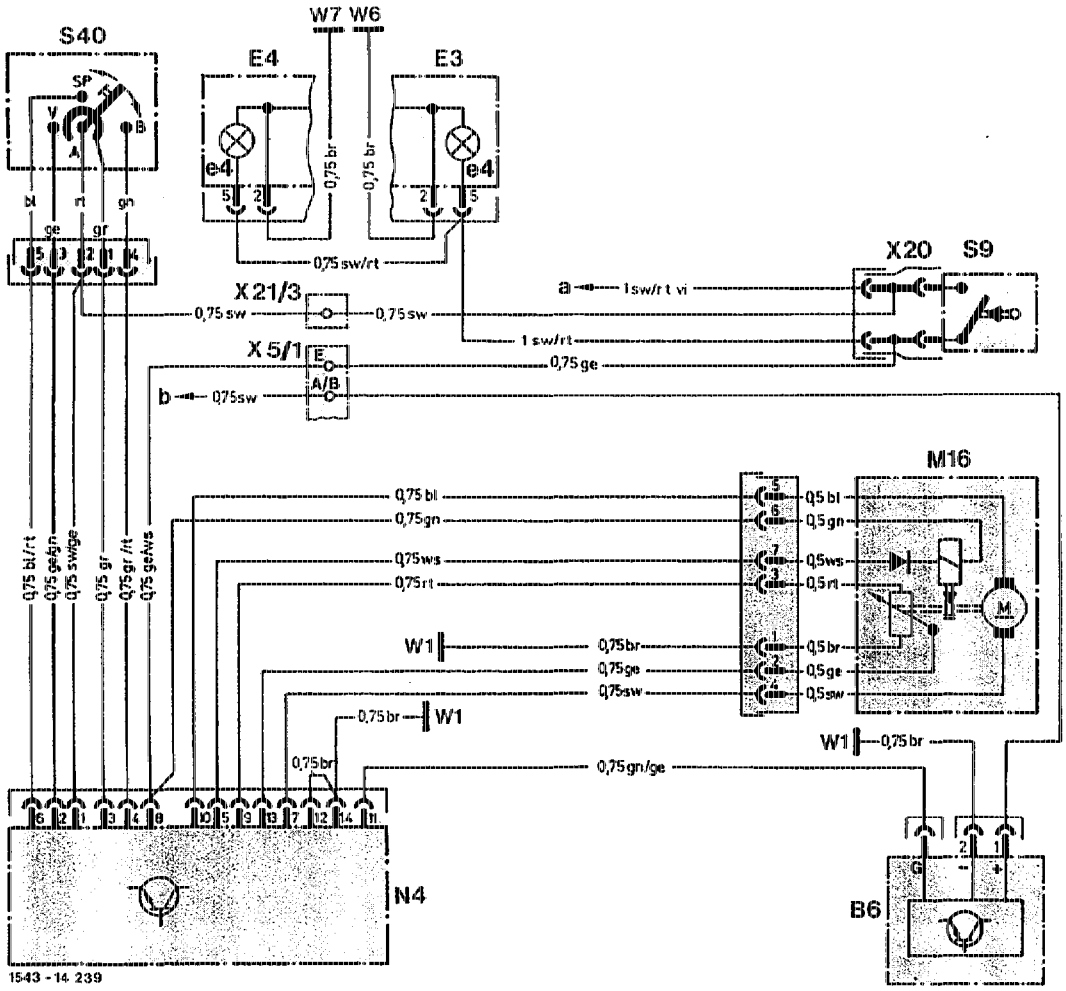

Model 201.023 as of vehicle ident. end no. A 313826/F 229815
up to vehicle ident. end no. A 384359/F 286572

B6	Hall-effect speed sensor	W1	Main ground (behind instrument cluster)
E3	Left tail lamp unit	W6	Ground, left rear wheelhouse in trunk
E3e4	Stop lamp	W7	Ground, right rear wheelhouse in trunk
E4	Right tail lamp unit	X5/1	Terminal block, interior (5-pole)
E4e4	Stop lamp		A/B ident. colour, black
M16	Cruise control actuator		E ident. colour yellow
N4	Cruise control amplifier	X20	Connector, stop lamp switch
S9	Stop lamp switch	X21/3	Terminal block, stop lamp switch/cruise control (1-pole)
S40	Cruise control switch	a	On electrical center, coupling field L, line-up 1
	V Decelerate/set	b	On electrical center, coupling field C, line-up 1
	B Accelerate/set		
	SB Resume		
	A Off		

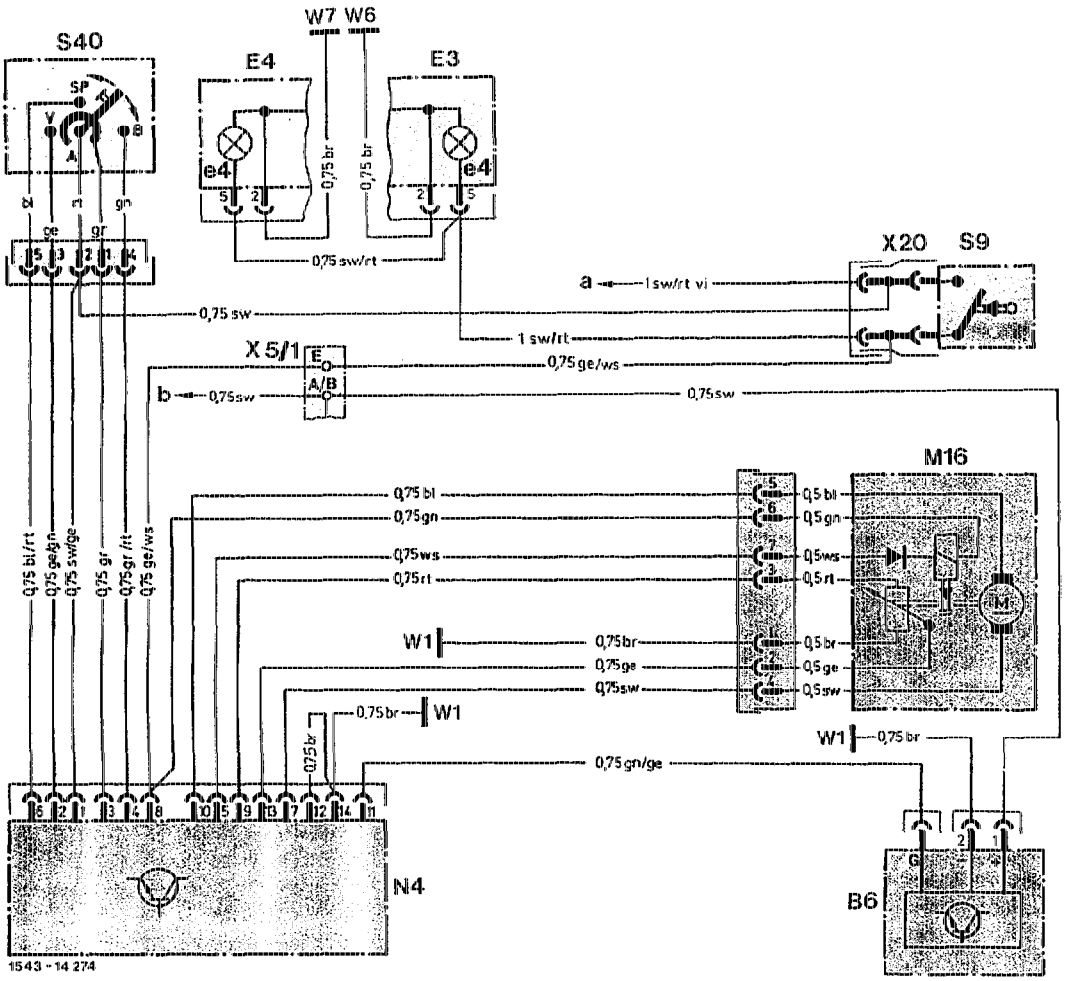

Model 201.023 as of vehicle ident end no. A 384360/F 286573

B6	Hall-effect speed sensor	W1	Main ground (behind instrument cluster)
E3	Left tail lamp unit	W6	Ground, left rear wheelhouse in trunk
E3e4	Stop lamp	W7	Ground, right rear wheelhouse in trunk
E4	Right tail lamp unit	X5/1	Terminal block, interior (5-pole)
E4e4	Stop lamp		A/B ident. colour, black
M16	Cruise control actuator		E ident. colour, yellow
N4	Cruise control amplifier	X20	Connector, stop lamp switch
S9	Stop lamp switch	a	On electrical center, coupling field L, line-up 1
S40	Cruise control switch	b	On electrical center, coupling field C, line-up 1
	V Decelerate/set		
	B Accelerate/set		
	SB Resume		
	A Off		

E. Model 201 with CIS-E injection engine and automatic transmission

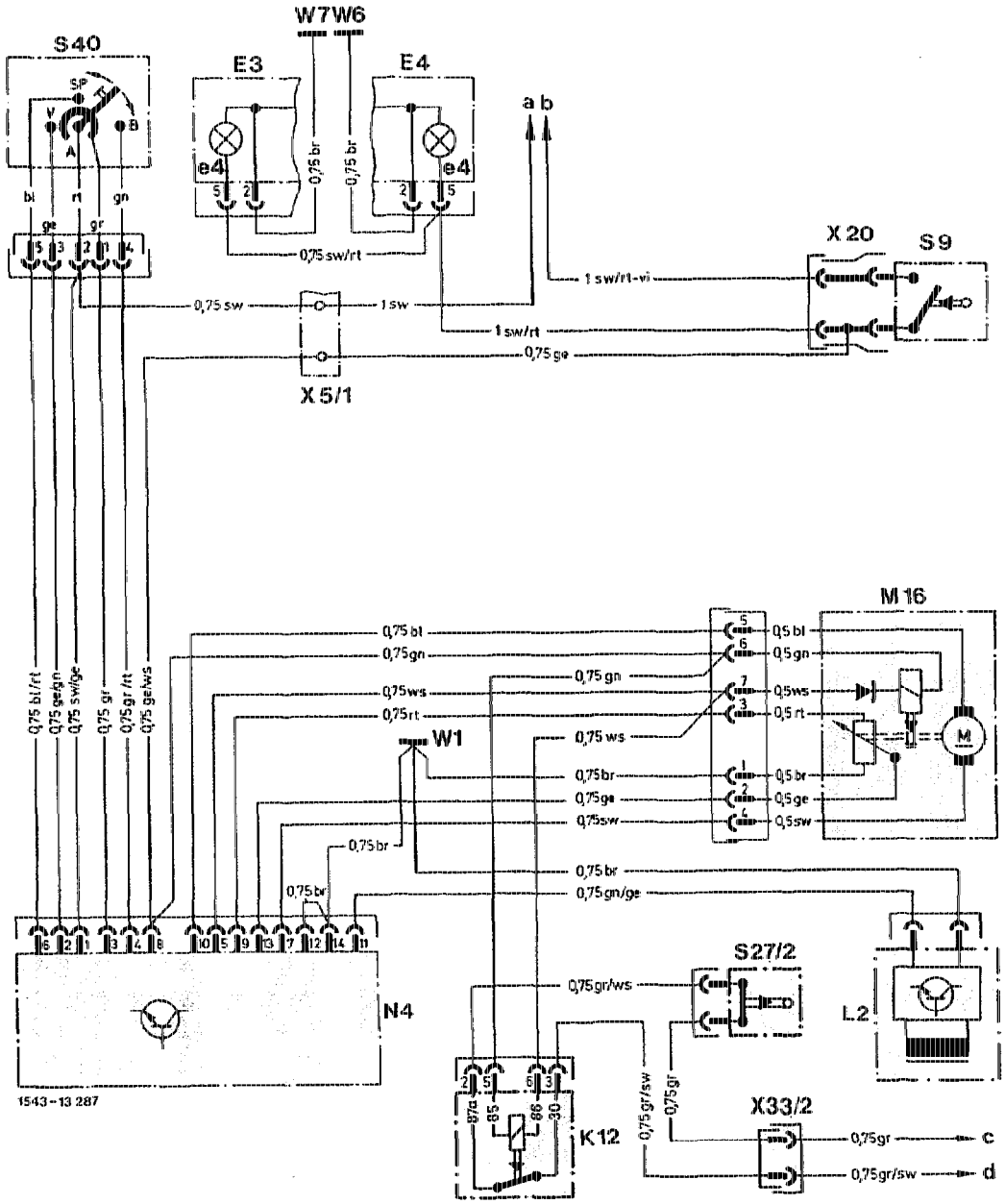

Model 201.024 up to approx. 08/85,
except: (USA) (J), vehicles with air conditioning system as of approx. 10/84,
vehicles with RÜF or CAT

E3	Left tail lamp unit
E3e4	Stop lamp
E4	Right tail lamp unit
E4e4	Stop lamp
L2	Road speed sensor
M16	Cruise control actuator
N4	Cruise control amplifier
K12	Deceleration fuel shut-off/cruise control relay
S9	Stop lamp switch
S27/2	Deceleration shut-off microswitch
S40	Cruise control switch
	V Decelerate/set
	B Accelerate/set
	SB Resume
	A Off
W1	Main ground (behind instrument cluster)
W6	Ground, left rear wheelhouse in trunk
W7	Ground, right rear wheelhouse in trunk
X5/1	Terminal block, interior (5-pole)
X20	Connector, stop lamp switch
X33/2	Connector, CIS-E/cruise control (2-pole)
a	On electrical center, coupling field L, line-up 1
b	On electrical center, coupling field C, line-up 1
c	On throttle valve switch
d	On CIS-E control unit, line-up 13

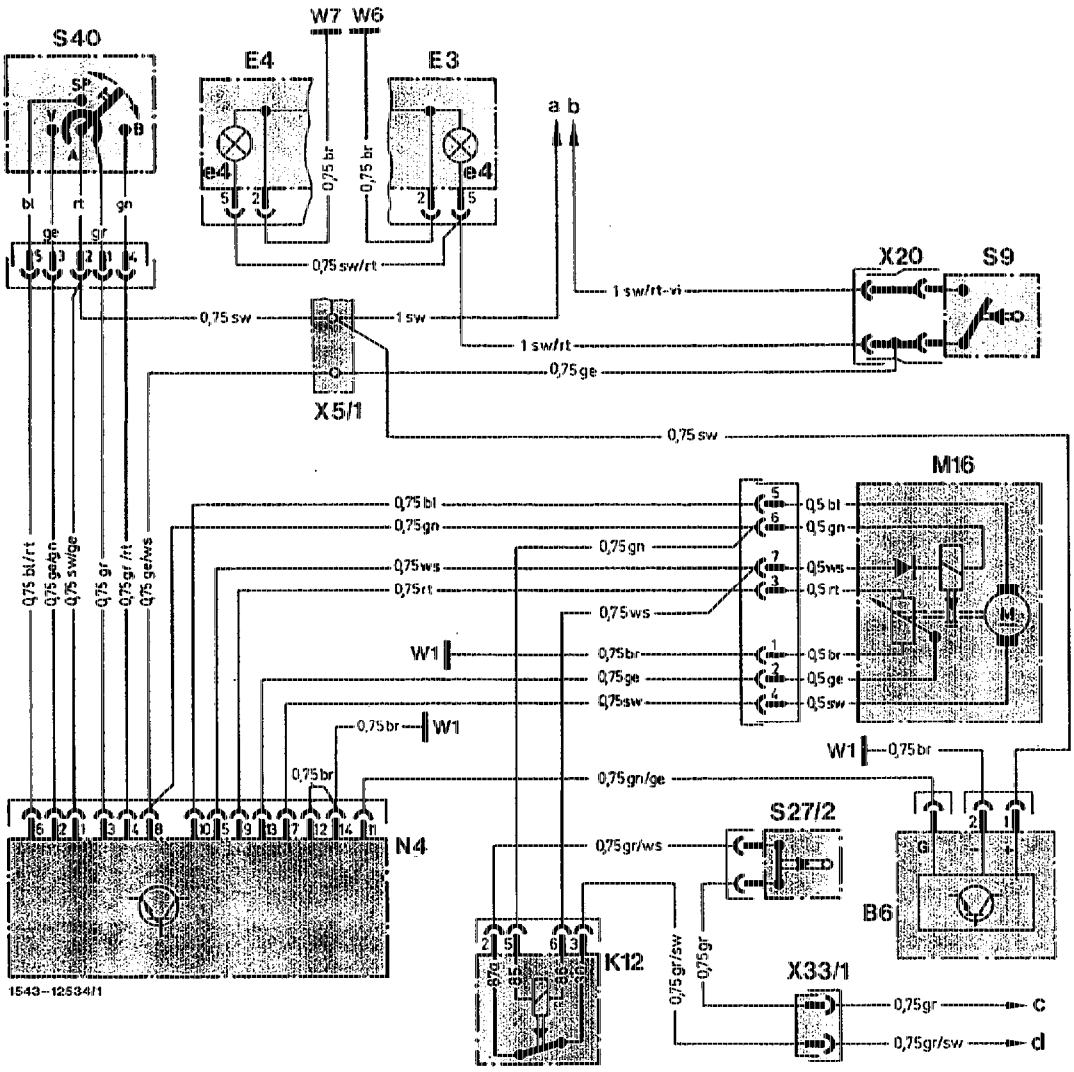

Model 201.024 as of approx. 09/85 up to vehicle ident. end no. A 313825/F 229814 except: (USA) (J), vehicles with air conditioning system, vehicles with RÜF or CAT

B6	Hall-effect speed sensor	W1	Main ground (behind instrument cluster)
E3	Left tail lamp unit	W6	Ground, left rear wheelhouse in trunk
E3e4	Stop lamp	W7	Ground, right rear wheelhouse in trunk
E4	Right tail lamp unit	X5/1	Terminal block, interior (5-pole)
E4e4	Stop lamp	X20	Connector, stop lamp switch
M16	Cruise control actuator	X33/1	Connector, actuator/cruise control extension
N4	Cruise control amplifier	a	On electrical center, coupling field L, line-up 1
K12	Deceleration fuel shut-off/cruise control relay	b	On electrical center, coupling field C, line-up 1
S9	Stop lamp switch	c	On throttle valve switch
S27/2	Deceleration shut-off microswitch	d	On CIS-E control unit, line-up 13
S40	Cruise control switch		
	V Decelerate/set		
	B Accelerate/set		
	SB Resume		
	A Off		

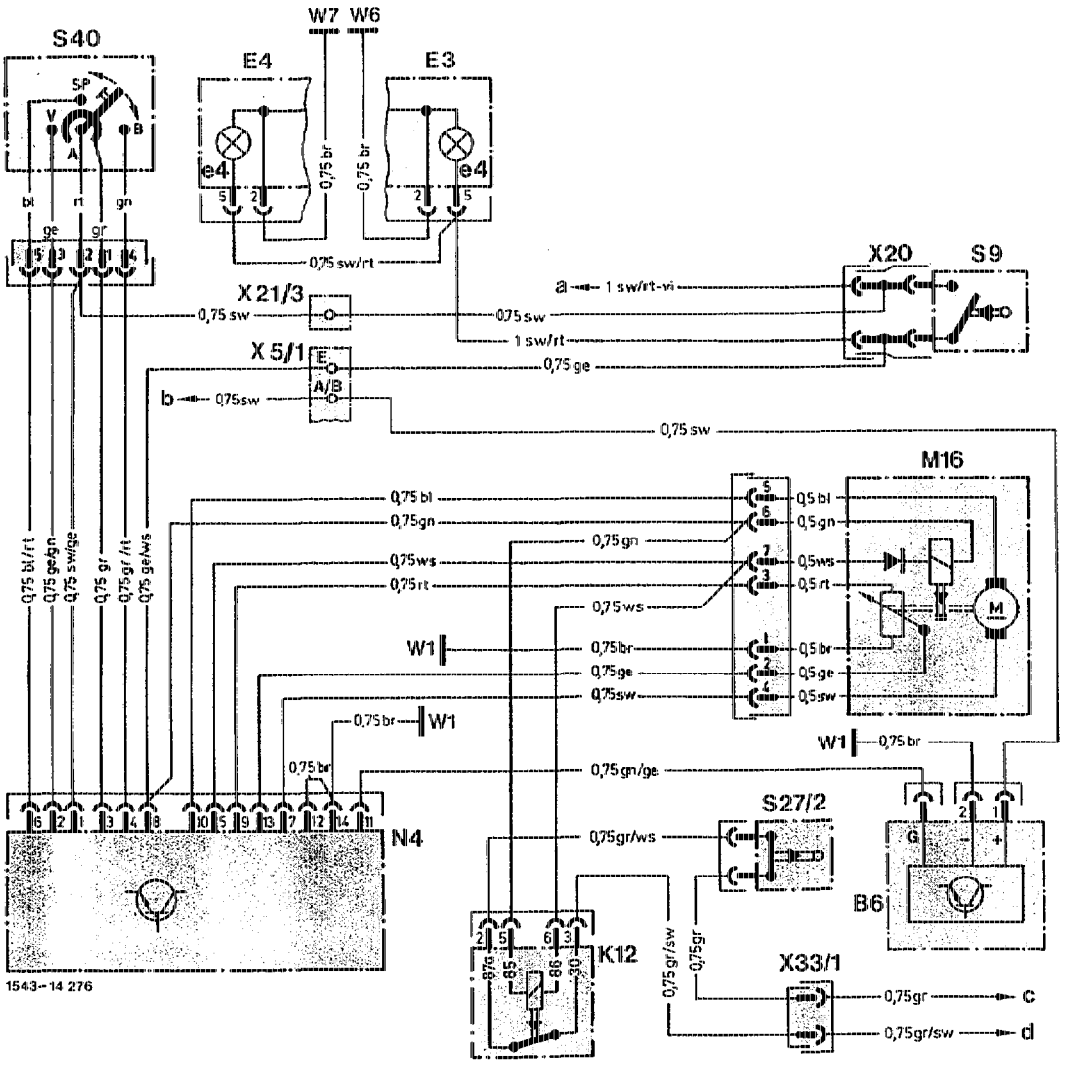

Model 201.024 as of vehicle ident. end no. A 313826/F 229815 up to vehicle ident. end no. A 384359/F 286582 except: (USA) (J), vehicles with air conditioning system, vehicles with RÜF or CAT

B6	Hall-effect speed sensor	W1	Main ground (behind instrument cluster)
E3	Left tail lamp unit	W6	Ground, left rear wheelhouse in trunk
E3e4	Stop lamp	W7	Ground, right rear wheelhouse in trunk
E4	Right tail lamp unit	X5/1	Terminal block, interior (5-pole)
E4e4	Stop lamp		A/B ident. colour, black
M16	Cruise control actuator		E ident. colour, yellow
N4	Cruise control amplifier	X20	Connector, stop lamp switch
K12	Deceleration fuel shut-off/cruise control relay	X21/3	Terminal block, stop lamp switch/cruise control (1-pole)
S9	Stop lamp switch		
S27/2	Deceleration shut-off microswitch	X33/1	Connector, actuator/cruise control extension
S40	Cruise control switch	a	On electrical center, coupling field C, line-up 1
	V Decelerate/set	b	On electrical center, coupling field L, line-up 1
	B Accelerate/set	c	On throttle valve switch
	SB Resume	d	On CIS-E control unit, line-up 13
	A Off		

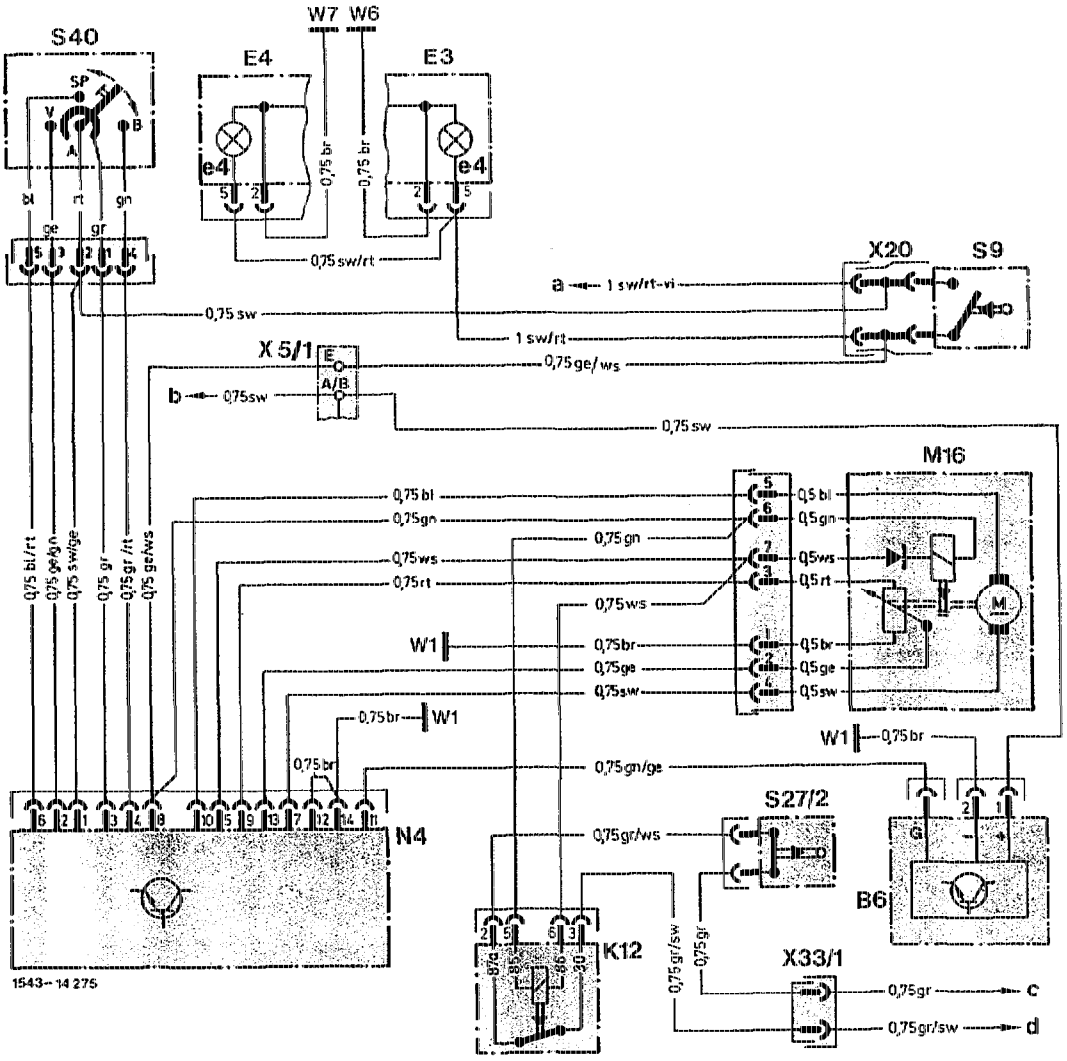

Model 201.024 as of vehicle ident end no. A 384360/F 286573
except: (USA) (J) vehicles with air conditioning system, vehicles with RÜF or CAT

B6	Hall-effect speed sensor	W1	Main ground (behind instrument cluster)
E3	Left tail lamp unit	W6	Ground, left rear wheelhouse in trunk
E3e4	Stop lamp	W7	Ground, right rear wheelhouse in trunk
E4	Right tail lamp unit	X5/1	Terminal block, interior (5-pole)
E4e4	Stop lamp		A/B ident. colour, black
M16	Cruise control actuator		E ident. colour, yellow
N4	Cruise control amplifier	X20	Connector, stop lamp switch
K12	Deceleration fuel shut-off/cruise control relay	X33/1	Connector, actuator/cruise control extension
S9	Stop lamp switch	a	On electrical center, coupling field C, line-up 1
S27/2	Deceleration shut-off microswitch	b	On electrical center, coupling field L, line-up 1
S40	Cruise control switch	c	On throttle valve switch
	V Decelerate/set	d	On CIS-E control unit, line-up 13
	B Accelerate/set		
	SB Resume		
	A Off		

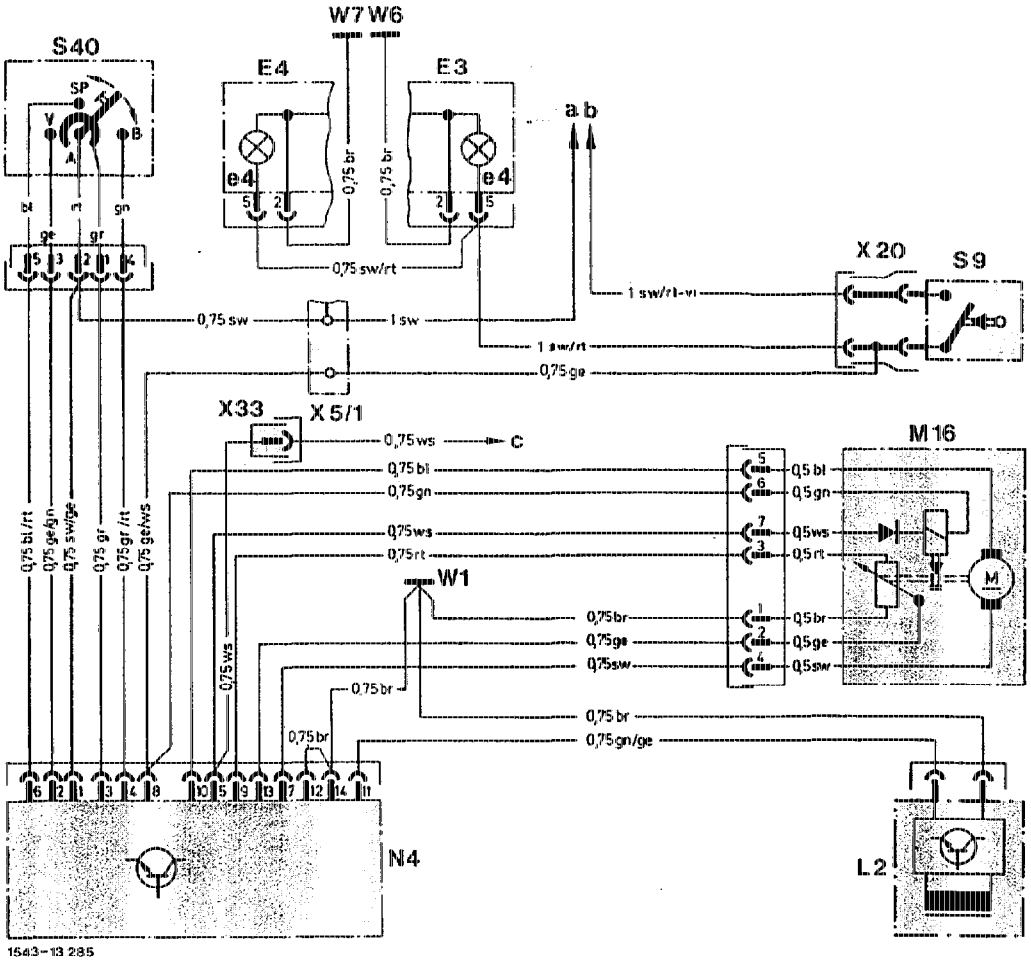

Model 201.024 Vehicles with air conditioning system as of approx. 10/84 up to approx. 08/85, (USA) (J) up to 1985

E3	Left tail lamp unit	W1	Main ground (behind instrument cluster)
E3e4	Stop lamp	W6	Ground, left rear wheelhouse in trunk
E4	Right tail lamp unit	W7	Ground, right rear wheelhouse in trunk
E4e4	Stop lamp	X5/1	Terminal block, interior (5-pole)
L2	Road speed sensor	X20	Connector, stop lamp switch
M16	Cruise control actuator	X33	Connector, CIS-E/cruise control (1-pole)
N4	Cruise control amplifier	a	On electrical center, coupling field L, line-up 1
S9	Stop lamp switch	b	On electrical center, coupling field C, line-up 1
S40	Cruise control switch	c	On CIS-E control unit, line-up 6
	V Decelerate/set		
	B Accelerate/set		
	SB Resume		
	A Off		

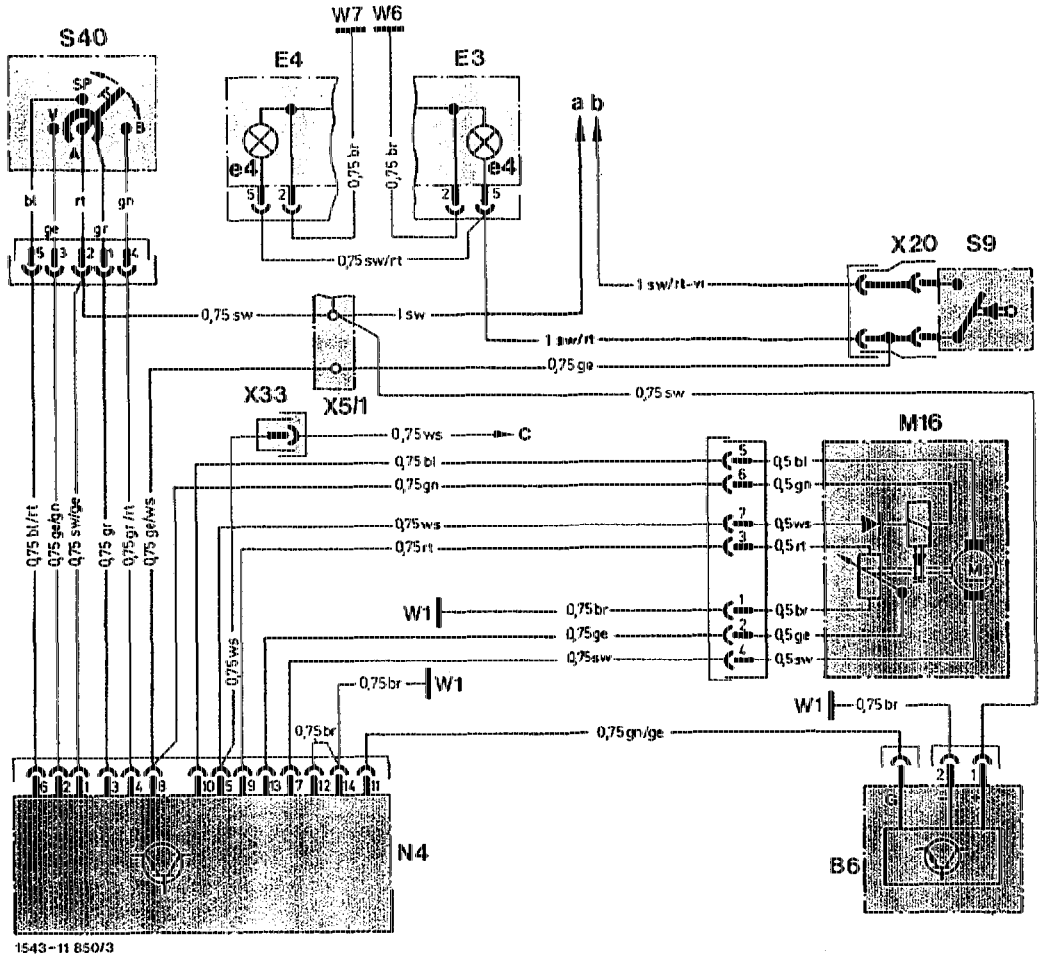

Model 201.024/034 Vehicles with air conditioning system, vehicles with RÜF or CAT as of approx. 09/85 up to vehicle ident. end no. A 313825/F 229814, (USA) (J) 1986

B6	Hall-effect speed sensor
E3	Left tail lamp unit
E3e4	Stop lamp
E4	Right tail lamp unit
E4e4	Stop lamp
M16	Cruise control actuator
N4	Cruise control amplifier
S9	Stop lamp switch
S40	Cruise control switch
	V Decelerate/set
	B Accelerate/set
	SB Resume
	A Off
W1	Main ground (behind instrument cluster)
W6	Ground, left rear wheelhouse in trunk
W7	Ground, right rear wheelhouse in trunk
X5/1	Terminal block, interior (5-pole)
X20	Connector, stop lamp switch
X33	Connector, CIS-E/cruise control (1-pole)
a	On electrical center, coupling field L, line-up 1
b	On electrical center, coupling field C, line-up 1
c	On CIS-E control unit, line-up 6

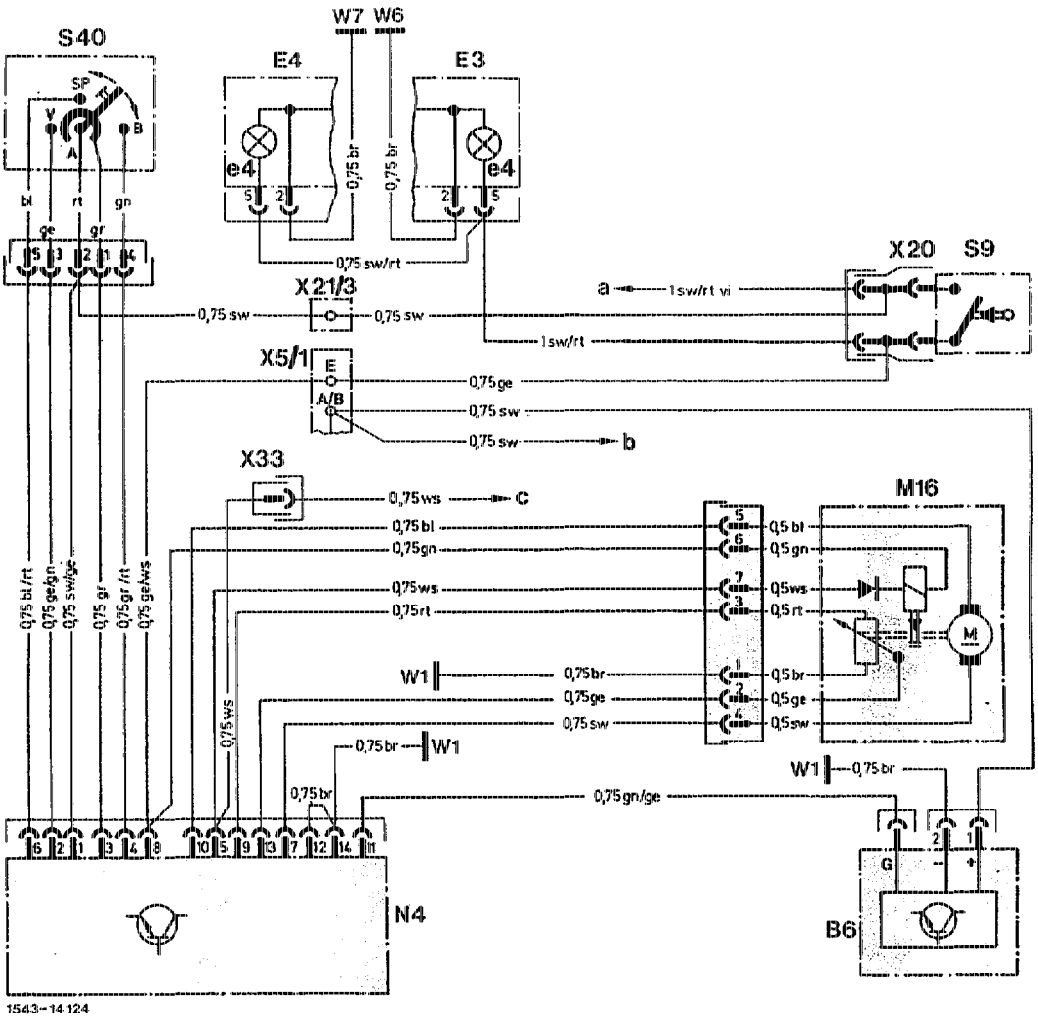

Model 201.024/028/034 Vehicles with air conditioning system, vehicles with RÜF or CAT as of vehicle ident. end no. A 313826/F 229815 up to vehicle ident. end no. A 384359/ F 286572, (USA) (J) 1986, 1987

B6	Hall-effect speed sensor	W1	Main ground (behind instrument cluster)
E3	Left tail lamp unit	W6	Ground, left rear wheelhouse in trunk
E3e4	Stop lamp	W7	Ground, right rear wheelhouse in trunk
E4	Right tail lamp unit	X5/1	Terminal block, interior (5-pole)
E4e4	Stop lamp		A/B ident. colour black
M16	Cruise control actuator		E ident. colour yellow
N4	Cruise control amplifier	X20	Connector, stop lamp switch
S9	Stop lamp switch	X21/3	Terminal block, stop lamp switch/cruise control (1-pole)
S40	Cruise control switch	X33	Connector, CIS-E/cruise control (1-pole)
	V Decelerate/set	a	On electrical center, coupling field C, line-up 1
	B Accelerate/set	b	On electrical center, coupling field L, line-up 1
	SB Resume	c	On CIS-E control unit, line-up 6
	A Off		

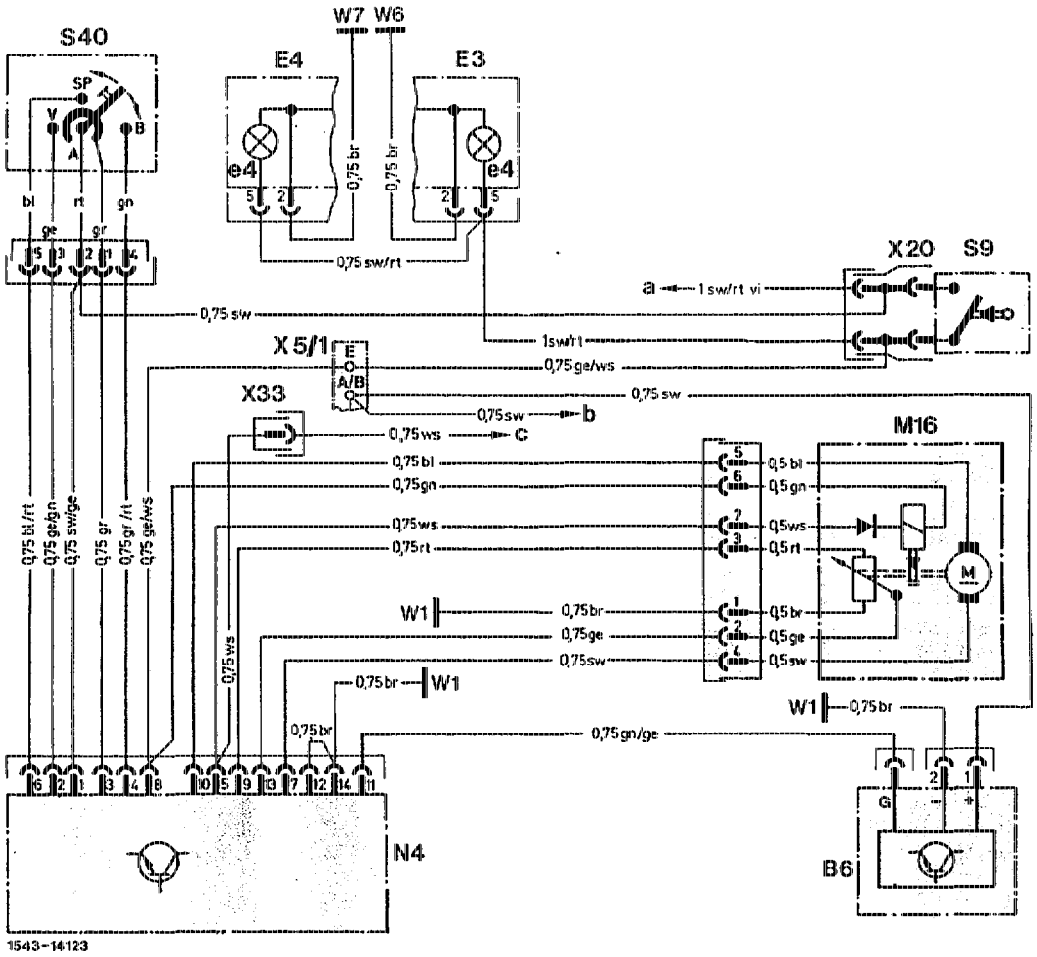

Model 201.024/028/034 Vehicles with air conditioning system, vehicles with RÜF or CAT as of vehicle ident end no. A 384360/F 286573 up to 08/ 88

(USA) (J) 1987, 1988 (201.028 (USA) 1987)

B6	Hall-effect speed sensor	W1	Main ground (behind instrument cluster)
E3	Left tail lamp unit	W6	Ground, left rear wheelhouse in trunk
E3e4	Stop lamp	W7	Ground, right rear wheelhouse in trunk
E4	Right tail lamp unit	X5/1	Terminal block, interior (5-pole)
E4e4	Stop lamp		A/B ident. colour black
M16	Cruise control actuator		E ident. colour yellow
N4	Cruise control amplifier	X20	Connector, stop lamp switch
S9	Stop lamp switch	X33	Connector, CIS-E/cruise control (1-pole)
S40	Cruise control switch	a	On electrical center, coupling field C, line-up 1
	V Decelerate/set	b	On electrical center, coupling field L, line-up 1
	B Accelerate/set	c	On CIS-E control unit, line-up 6
	SB Resume		
	A Off		

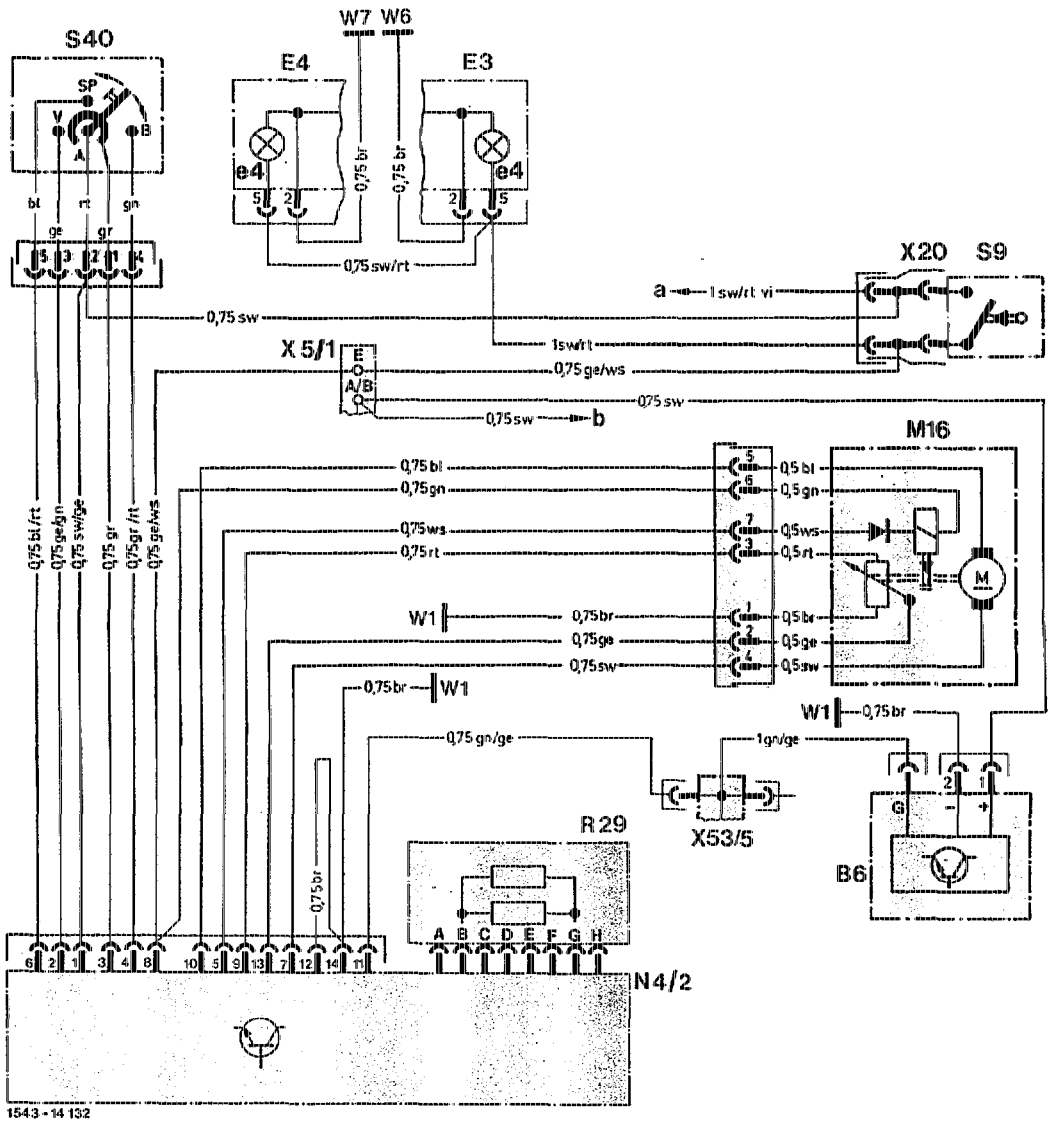

Model 201.028 (USA) 1988, 201.029 up to 08/88, (USA) 1987, 1988

B6	Hall-effect speed sensor	W1	Main ground (behind instrument cluster)
E3	Left tail lamp unit	W6	Ground, left rear wheelhouse in trunk
E3e4	Stop lamp	W7	Ground, right rear wheelhouse in trunk
E4	Right tail lamp unit	X5/1	Terminal block, interior (5-pole)
E4e4	Stop lamp		A/B ident. colour black
M16	Cruise control actuator		E ident. colour yellow
N4/2	Cruise control amplifier with reference resistor 1)	X20	Connector, stop lamp switch
R29	Cruise control reference resistor	X53/5	Multipoint connector, Hall-effect sensor
S9	Stop lamp switch	a	On electrical center, coupling field C, line-up 1
S40	Cruise control switch	b	On electrical center, coupling field L, line-up 1
	V Decelerate/set		
	B Accelerate/set		
	SB Resume		
	A Off		

1) Cruise control amplifier N4 without reference resistor on model 201.028.

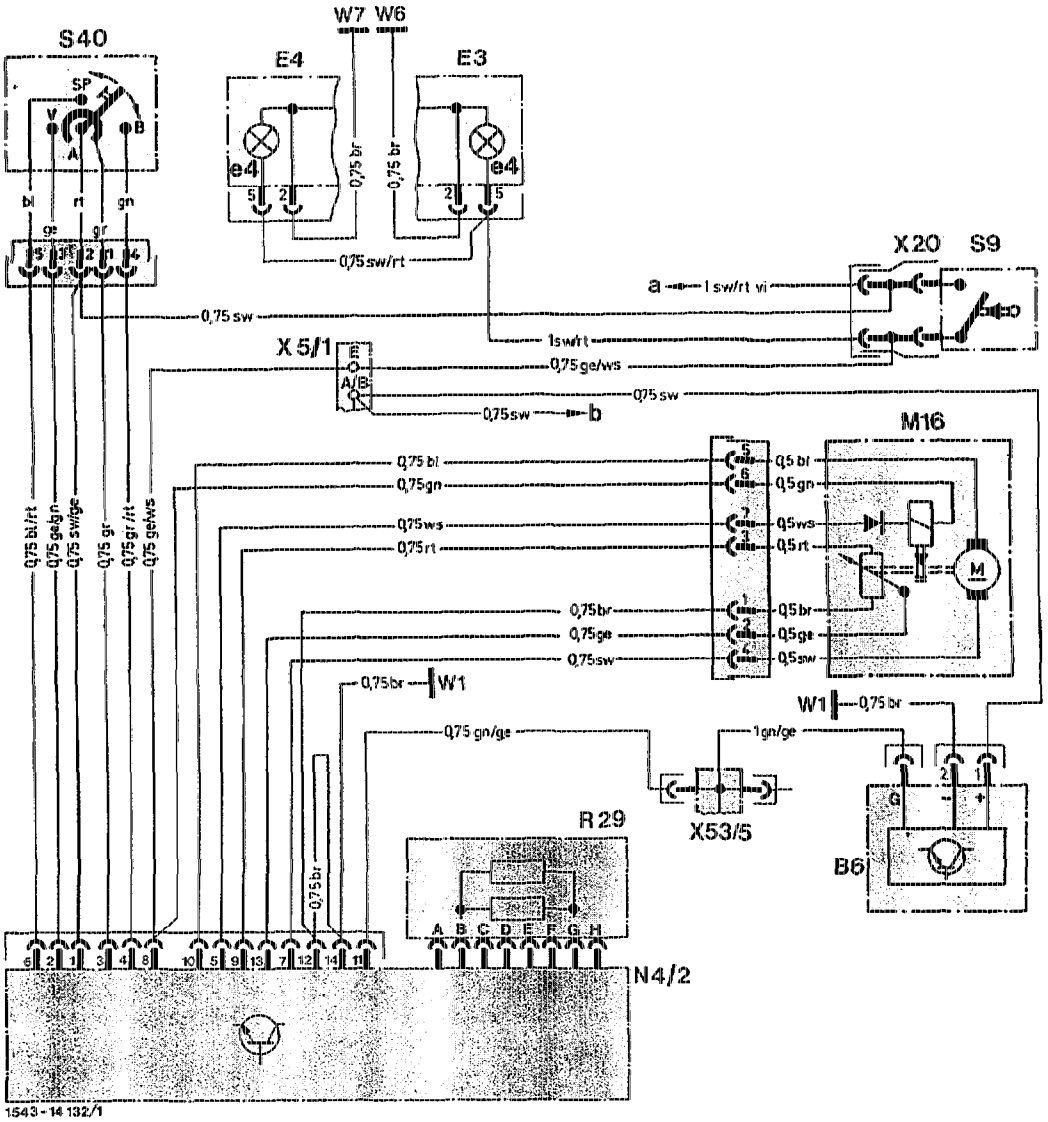

Model 201.024/028/029/035 RÜF/CAT as of 09/88, (USA) as of 1989

B6	Hall-effect speed sensor	W1	Main ground (behind instrument cluster)
E3	Left tail lamp unit	W6	Ground, left rear wheelhouse in trunk
E3e4	Stop lamp	W7	Ground, right rear wheelhouse in trunk
E4	Right tail lamp unit	X5/1	Terminal block, interior (5-pole)
E4e4	Stop lamp		A/B ident. colour black
M16	Cruise control actuator		E ident. colour yellow
N4/2	Cruise control amplifier with reference resistor	X20	Connector, stop lamp switch
R29	Cruise control reference resistor	X53/5	Multipoint connector, Hall-effect sensor
S9	Stop lamp switch	a	On electrical center, coupling field C, line-up 1
S40	Cruise control switch	b	On electrical center, coupling field L, line-up 1
	V Decelerate/set		
	B Accelerate/set		
	SB Resume		
	A Off		

F. Model 201 with CIS-E injection engine and manual transmission

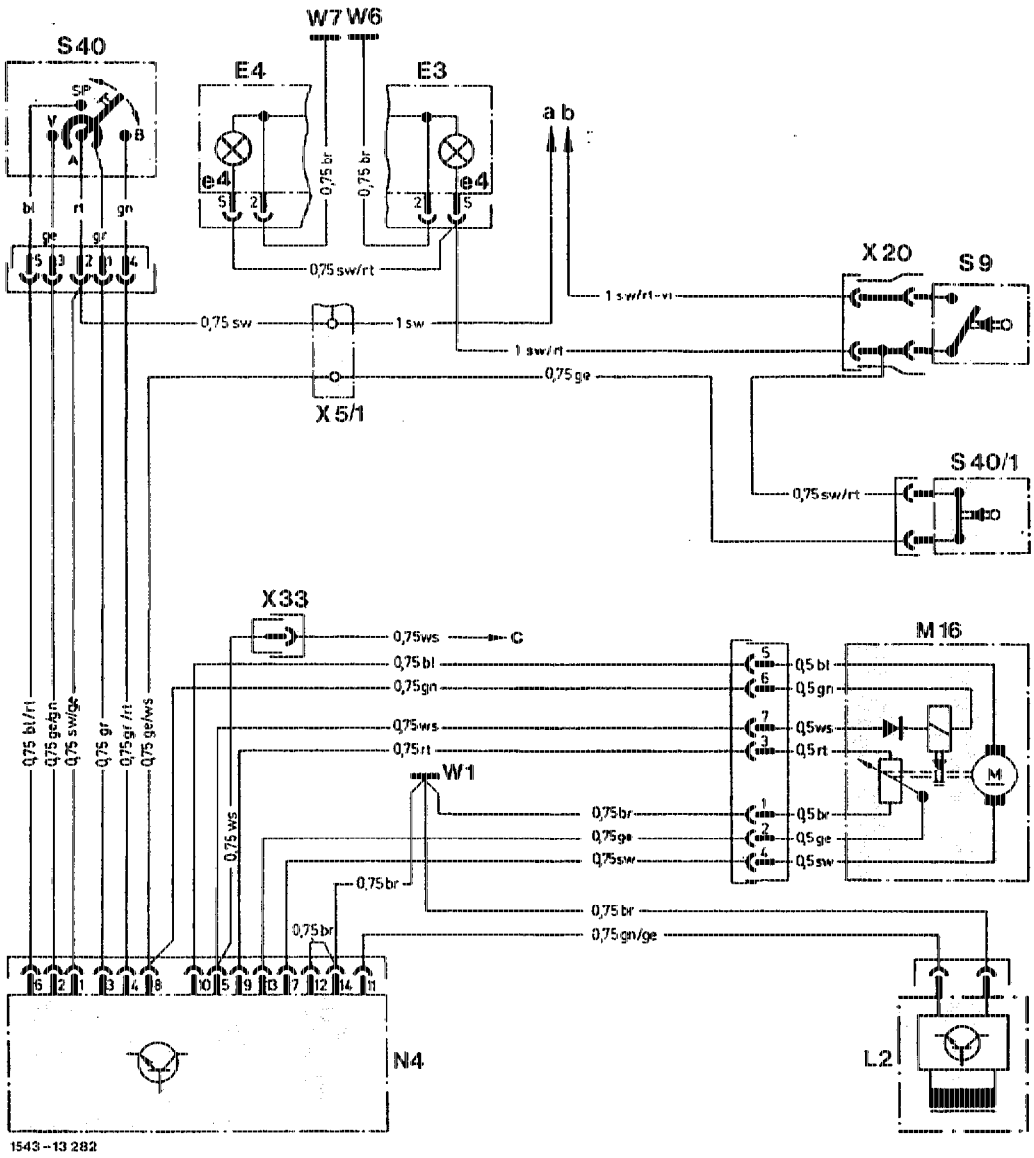

Model 201.024 (USA) 1984, 1985, up to vehicle ident. end no. A 209722/F 089773

E3	Left tail lamp unit	S40/1	Clutch pedal switch (cruise control)
E3e4	Stop lamp	W1	Main ground (behind instrument cluster)
E4	Right tail lamp unit	W6	Ground, left rear wheelhouse in trunk
E4e4	Stop lamp	W7	Ground, right rear wheelhouse in trunk
L2	Road speed sensor	X5/1	Terminal block, interior (5-pole)
M16	Cruise control actuator	X20	Connector, stop lamp switch
N4	Cruise control amplifier	X33	Connector, CIS-E/cruise control (1-pole)
S9	Stop lamp switch	a	On electrical center, coupling field L, line-up 1
S40	Cruise control switch	b	On electrical center, coupling field C, line-up 1
V	Decelerate/set	c	On CIS-E control unit, line-up 6
B	Accelerate/set		
SB	Resume		
A	Off		

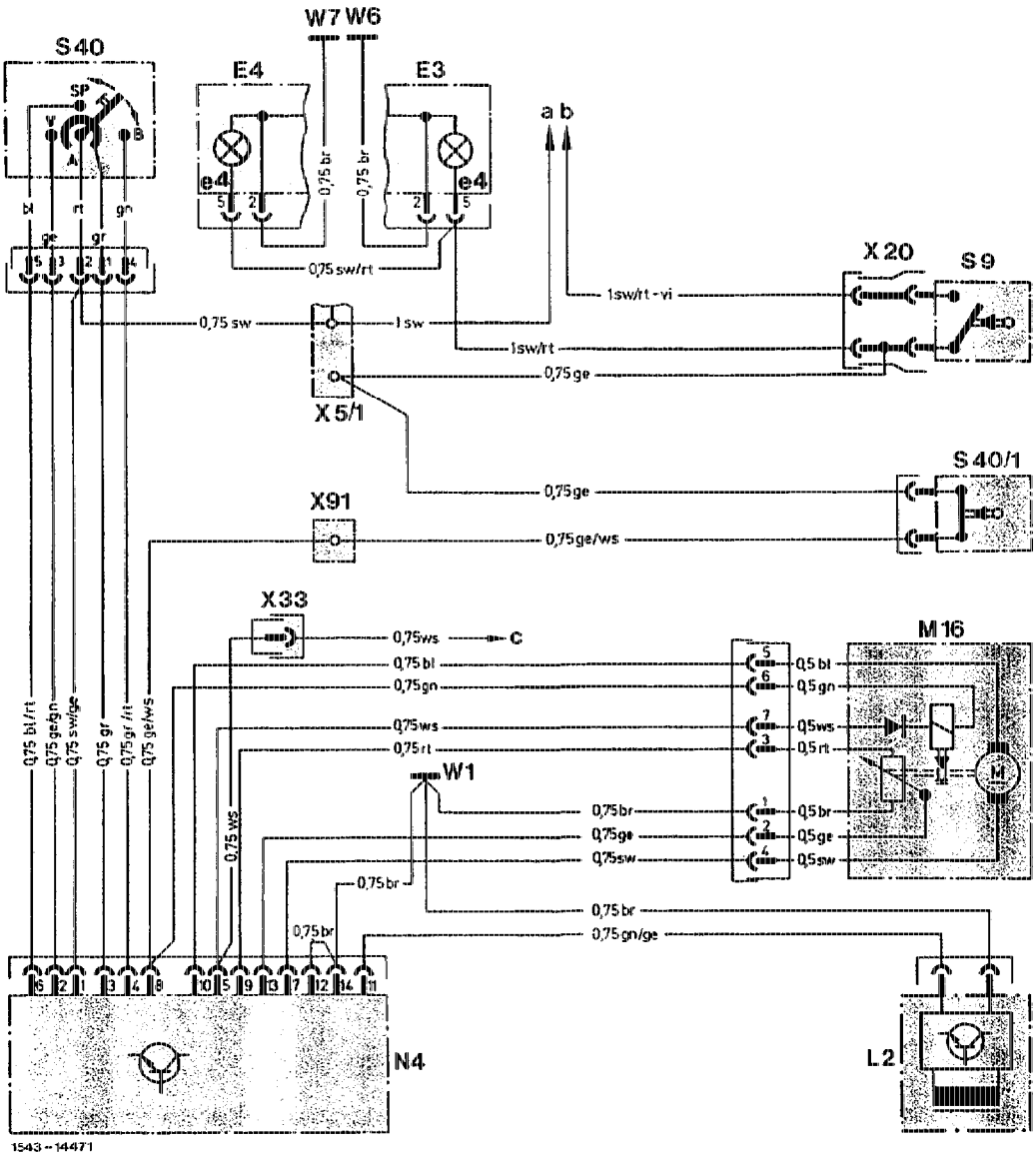

Model 201.024 (USA) 1985, as of vehicle ident end no. A 209723/F 089774

E3	Left tail lamp unit	S40/1	Clutch pedal switch (cruise control)
E3e4	Stop lamp	W1	Main ground (behind instrument cluster)
E4	Right tail lamp unit	W6	Ground, left rear wheelhouse in trunk
E4e4	Stop lamp	W7	Ground, right rear wheelhouse in trunk
L2	Road speed sensor	X5/1	Terminal block, interior (5-pole)
M16	Cruise control actuator	X20	Connector, stop lamp switch
N4	Cruise control amplifier	X33	Connector, CIS-E/cruise control (1-pole)
S9	Stop lamp switch	X91	Terminal block, clutch pedal/cruise control 1-pole
S40	Cruise control switch		
	V Decelerate/set	a	On electrical center, coupling field L, line-up 1
	B Accelerate/set	b	On electrical center, coupling field C, line-up 1
	SB Resume	c	On CIS-E control unit, line-up 6
	A Off		

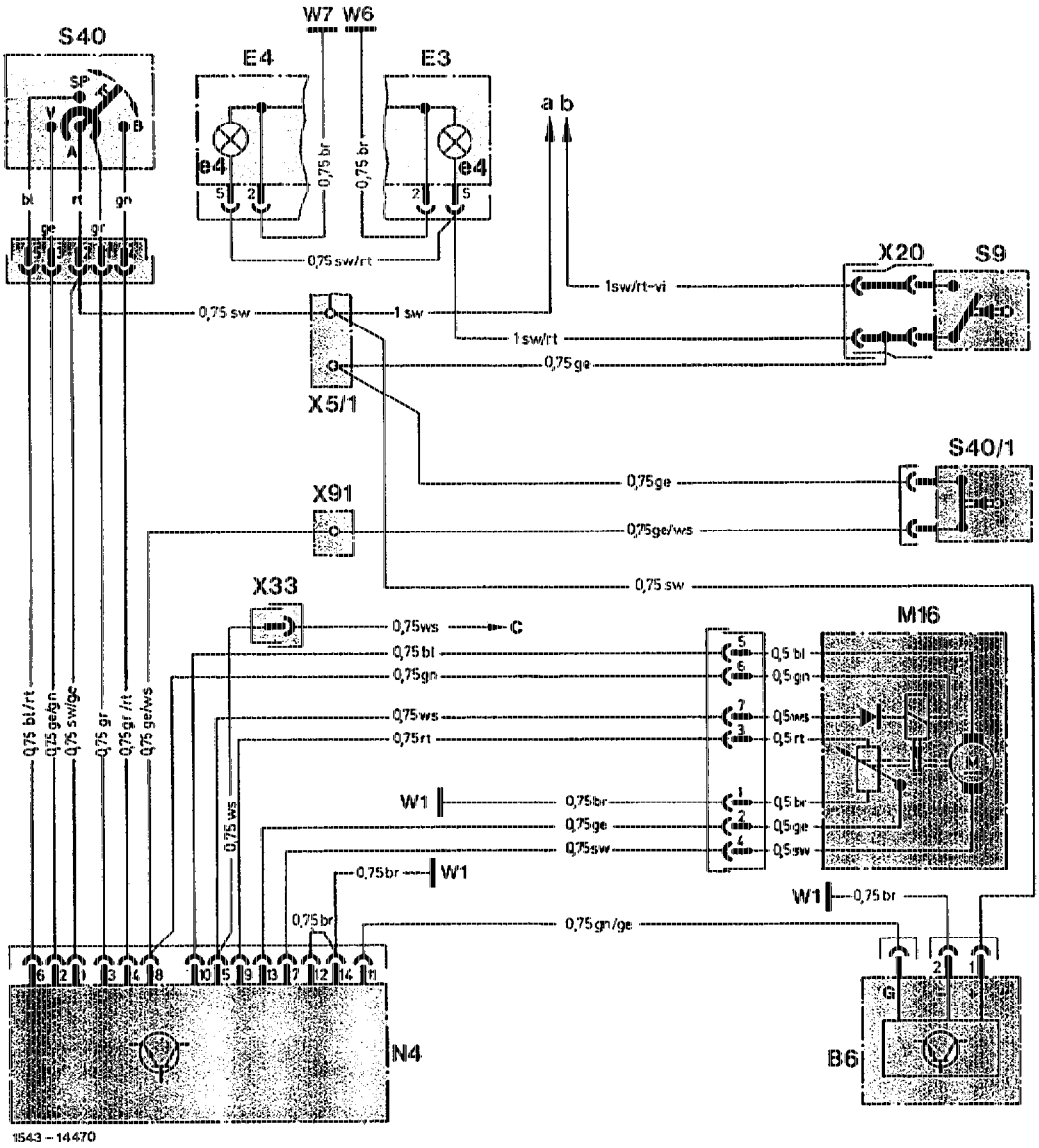

Model 201.024/034 (USA) 1986, up to vehicle ident. end no. F 229814

B6	Hall-effect speed sensor	S40/1	Clutch pedal switch (cruise control)
E3	Left tail lamp unit	W1	Main ground (behind instrument cluster)
E3e4	Stop lamp	W6	Ground, left rear wheelhouse in trunk
E4	Right tail lamp unit	W7	Ground, right rear wheelhouse in trunk
E4e4	Stop lamp	X5/1	Terminal block, interior (5-pole)
M16	Cruise control actuator	X20	Connector, stop lamp switch
N4	Cruise control amplifier	X33	Connector, CIS-E/cruise control (1-pole)
S9	Stop lamp switch	X91	Terminal block, clutch pedal/cruise control 1-pole
S40	Cruise control switch		
	V Decelerate/set	a	On electrical center, coupling field L, line-up 1
	B Accelerate/set	b	On electrical center, coupling field C, line-up 1
	SB Resume	c	On CIS-E control unit, line-up 6
	A Off		

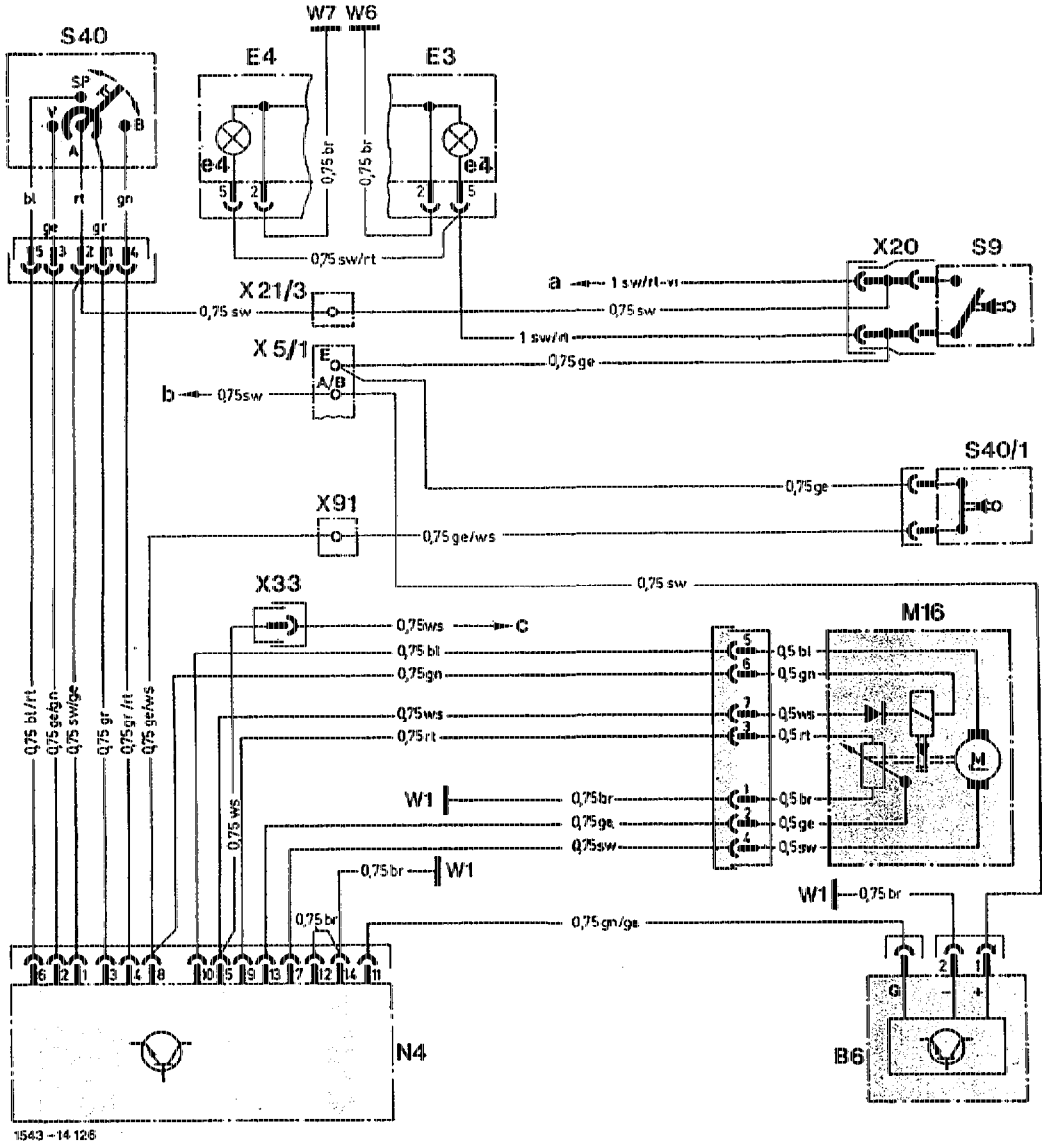

Model 201.024/028/034 (USA), 1986, 1987, as of vehicle ident end no. F 229815 up to vehicle ident. end no. F 286572

B6	Hall-effect speed sensor
E3	Left tail lamp unit
E3e4	Stop lamp
E4	Right tail lamp unit
E4e4	Stop lamp
M16	Cruise control actuator
N4	Cruise control amplifier
S9	Stop lamp switch
S40	Cruise control switch
	V Decelerate/set
	B Accelerate/set
	SB Resume
	A Off
S40/1	Clutch pedal switch (cruise control)
W1	Main ground (behind instrument cluster)
W6	Ground, left rear wheelhouse in trunk
W7	Ground, right rear wheelhouse in trunk
X5/1	Terminal block, interior (5-pole)
	A/B ident colour black
	E ident colour yellow
X20	Connector, stop lamp switch
X21/3	Terminal block, stop lamp switch/cruise control (1-pole)
X33	Connector, CIS-E/cruise control (1-pole)
X91	Terminal block, clutch pedal/cruise control 1-pole
a	On electrical center, coupling field C, line-up 1
b	On electrical center, coupling field L, line-up 1
c	On CIS-E control unit, line-up 6

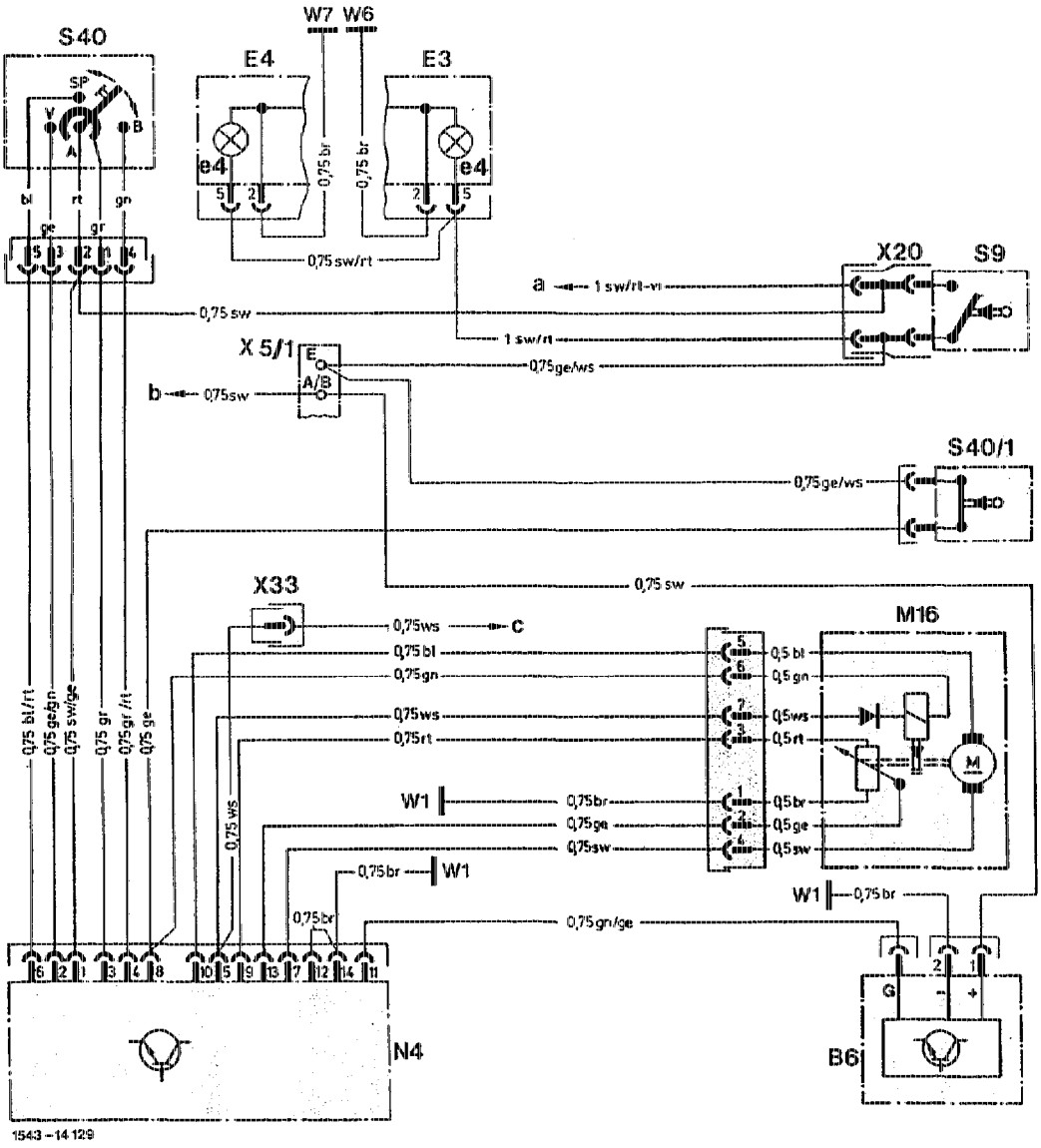

1543-14-129

Model 201.028/034 (USA) 1987, as of vehicle ident end no. F 286573

B6	Hall-effect speed sensor	W1	Main ground (behind instrument cluster)
E3	Left tail lamp unit	W6	Ground, left rear wheelhouse in trunk
E3e4	Stop lamp	W7	Ground, right rear wheelhouse in trunk
E4	Right tail lamp unit	X5/1	Terminal block, interior (5-pole)
E4e4	Stop lamp		A/B ident colour black
M16	Cruise control actuator		E ident colour yellow
N4	Cruise control amplifier	X20	Connector, stop lamp switch
S9	Stop lamp switch	X33	Connector, CIS-E/cruise control (1-pole)
S40	Cruise control switch	X91	Terminal block, clutch pedal/cruise control 1-pole
	V Decelerate/set		
	B Accelerate/set	a	On electrical center, coupling field C, line-up 1
	SB Resume	b	On electrical center, coupling field L, line-up 1
	A Off	c	On CIS-E control unit, line-up 6
S40/1	Clutch pedal switch (cruise control)		

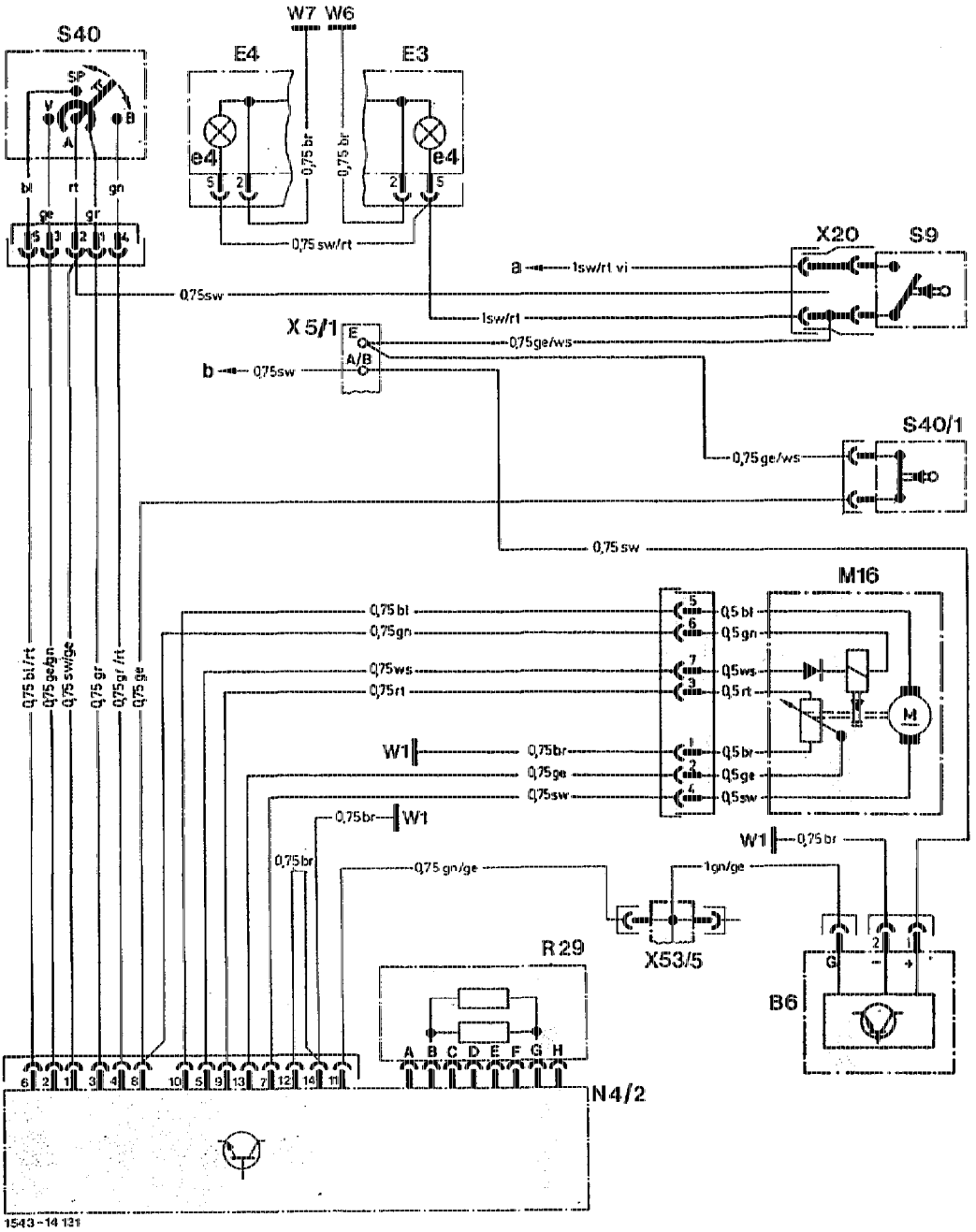

Model 201.029 (USA) 1987

B6	Hall-effect speed sensor
E3	Left tail lamp unit
E3e4	Stop lamp
E4	Right tail lamp unit
E4e4	Stop lamp
M16	Cruise control actuator
N4/2	Cruise control amplifier with reference resistor
R29	Cruise control reference resistor
S9	Stop lamp switch
S40	Cruise control switch
	V Decelerate/set
	B Accelerate/set
	SB Resume
	A Off
S40/1	Clutch pedal switch (cruise control)
W1	Main ground (behind instrument cluster)
W6	Ground, left rear wheelhouse in trunk
W7	Ground, right rear wheelhouse in trunk
X5/1	Terminal block, interior (5-pole)
	A/B ident colour black
	E ident colour yellow
X20	Connector, stop lamp switch
X53/5	Multipoint connector, Hall-effect sensor
a	On electrical center, coupling field C, line-up 1
b	On electrical center, coupling field L, line-up 1

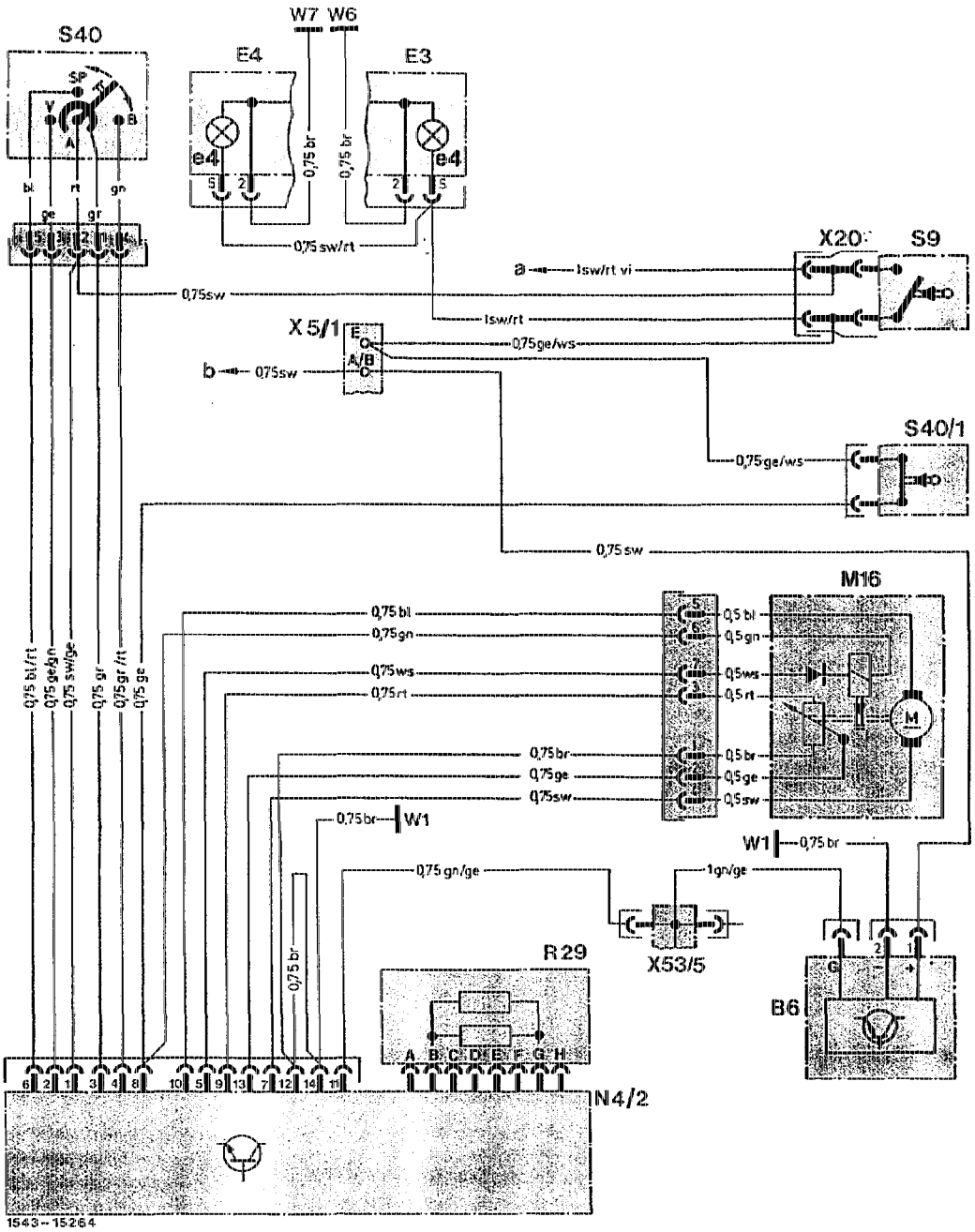

Model 201.028 (USA) 1988, 201.029 (USA) as of 1988

B6	Hall-effect speed sensor
E3	Left tail lamp unit
E3e4	Stop lamp
E4	Right tail lamp unit
E4e4	Stop lamp
M16	Cruise control actuator
N4/2	Cruise control amplifier with reference resistor
R29	Cruise control reference resistor
S9	Stop lamp switch
S40	Cruise control switch
	V Decelerate/set
	B Accelerate/set
	SB Resume
	A Off
S40/1	Clutch pedal switch (cruise control)
W1	Main ground (behind instrument cluster)
W6	Ground, left rear wheelhouse in trunk
W7	Ground, right rear wheelhouse in trunk
X5/1	Terminal block, interior (5-pole)
	A/B ident. colour black
	E ident. colour yellow
X20	Connector, stop lamp switch
X53/5	Multipoint connector, Hall-effect sensor
a	On electrical center, coupling field C, line-up 1
b	On electrical center, coupling field L, line-up 1

G. Model 201 with diesel engine and automatic transmission

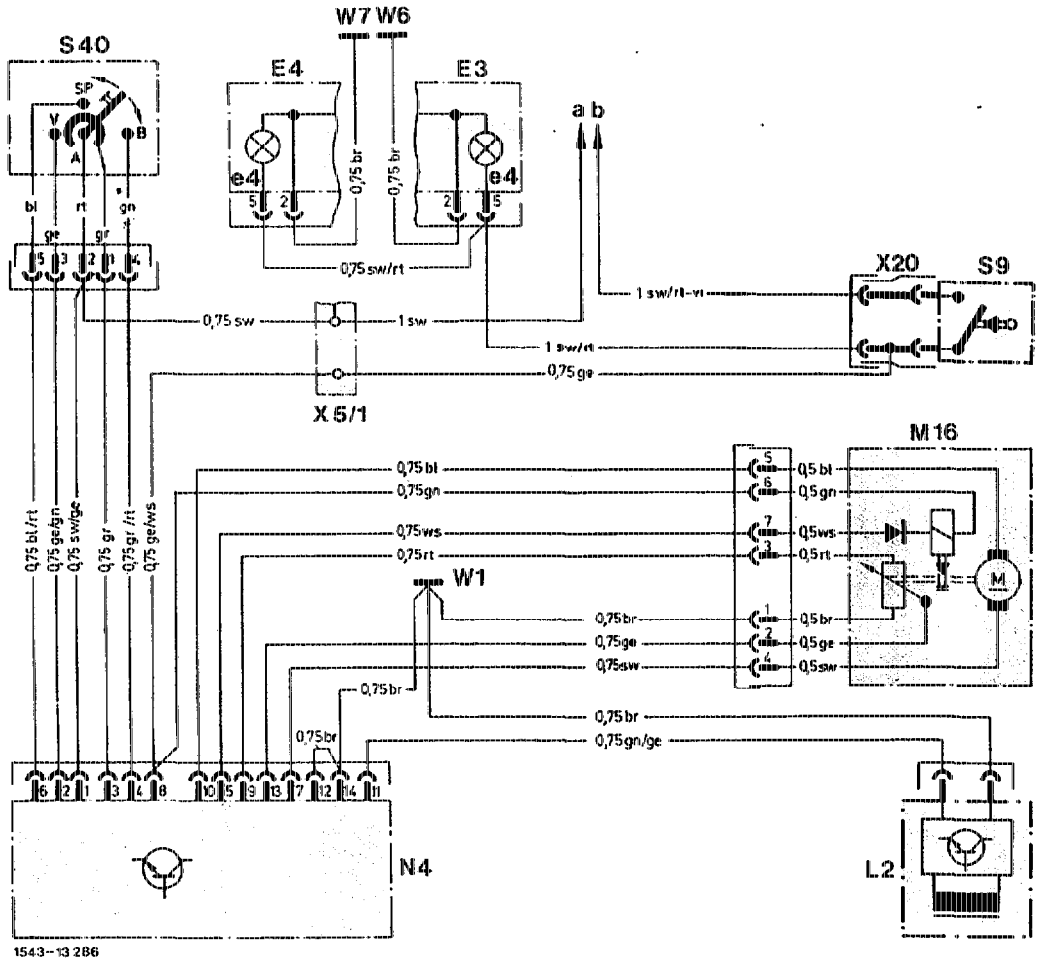

Model 201.122 up to approx. 08/85

E3	Left tail lamp unit
E3e4	Stop lamp
E4	Right tail lamp unit
E4e4	Stop lamp
L2	Road speed sensor
M16	Cruise control actuator
N4	Cruise control amplifier
S9	Stop lamp switch
S40	Cruise control switch
	V Decelerate/set
	B Accelerate/set
	SB Resume
	A Off
W1	Main ground (behind instrument cluster)
W6	Ground, left rear wheelhouse in trunk
W7	Ground, right rear wheelhouse in trunk
X5/1	Terminal block, interior (5-pole)
X20	Connector, stop lamp switch
a	On electrical center, coupling field L, line-up 1
b	On electrical center, coupling field C, line-up 1

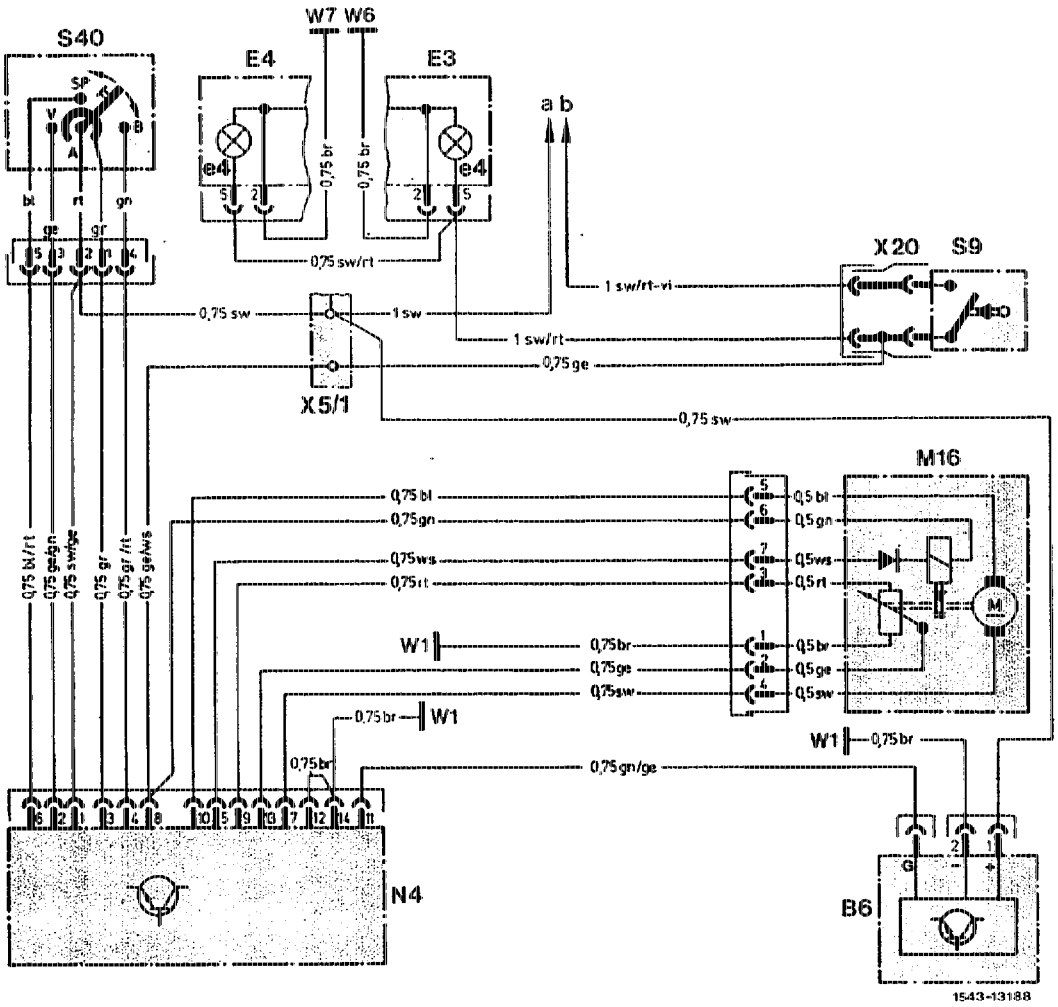

Model 201.122/126 as of approx. 09/85 up to vehicle ident. end no. A 313825/F 229814, except: (USA) as of 1986

B6	Hall-effect speed sensor
E3	Left tail lamp unit
E3e4	Stop lamp
E4	Right tail lamp unit
E4e4	Stop lamp
M16	Cruise control actuator
N4	Cruise control amplifier
S9	Stop lamp switch
S40	Cruise control switch
	V Decelerate/set
	B Accelerate/set
	SB Resume
	A Off
W1	Main ground (behind instrument cluster)
W6	Ground, left rear wheelhouse in trunk
W7	Ground, right rear wheelhouse in trunk
X5/1	Terminal block, interior (5-pole)
X20	Connector, stop lamp switch
a	On electrical center, coupling field L, line-up 1
b	On electrical center, coupling field C, line-up 1

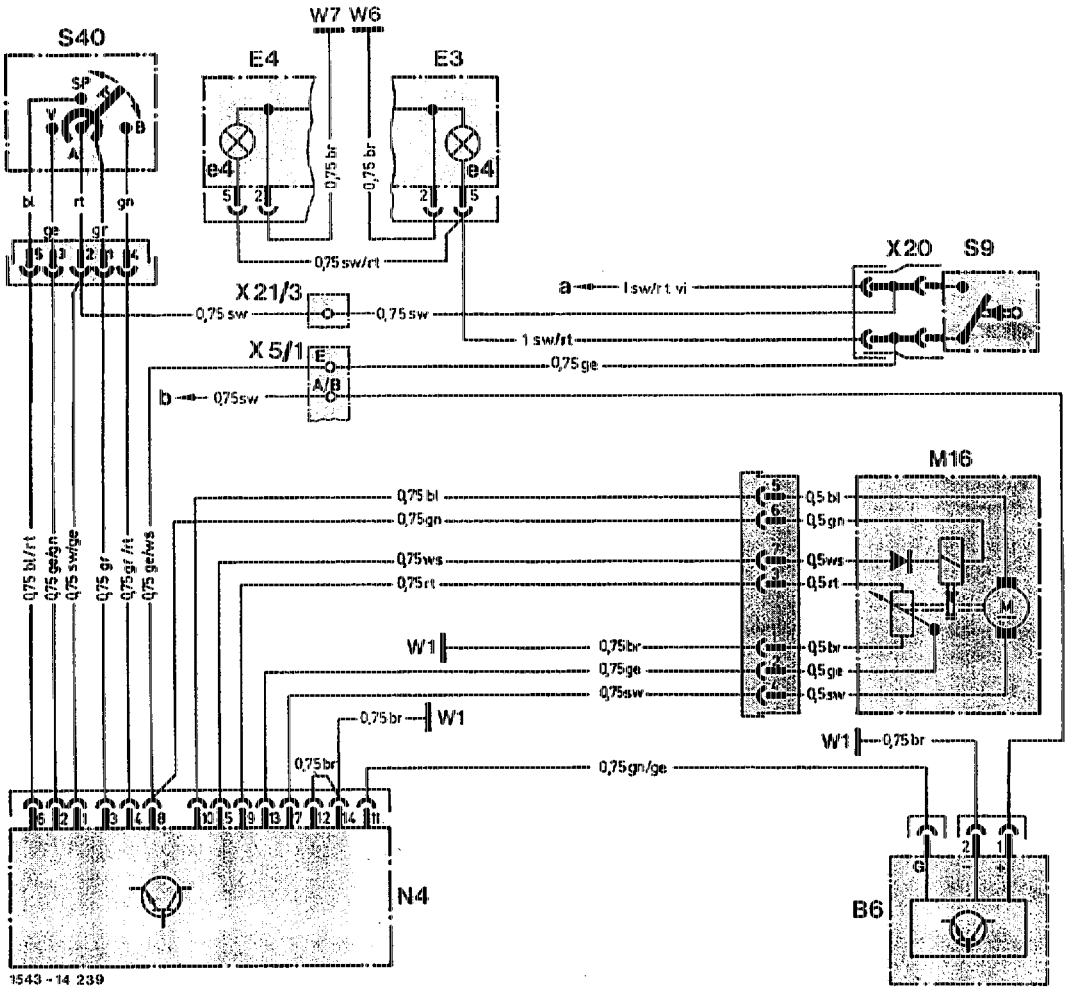

Model 201.122/126 as of vehicle ident end no. A 313826/F 229815
up to vehicle ident. end no. A 384359/F 286572, except: (USA) as of 1986

B6	Hall-effect speed sensor
E3	Left tail lamp unit
E3e4	Stop lamp
E4	Right tail lamp unit
E4e4	Stop lamp
M16	Cruise control actuator
N4	Cruise control amplifier
S9	Stop lamp switch
S40	Cruise control switch
	V Decelerate/set
	B Accelerate/set
	SB Resume
	A Off
W1	Main ground (behind instrument cluster)
W6	Ground, left rear wheelhouse in trunk
W7	Ground, right rear wheelhouse in trunk
X5/1	Terminal block, interior (5-pole)
	A/B ident. colour black
	E ident. colour yellow
X20	Connector, stop lamp switch
X21/3	Terminal block, stop lamp switch/cruise control (1-pole)
a	On electrical center, coupling field C, line-up 1
b	On electrical center, coupling field L, line-up 1

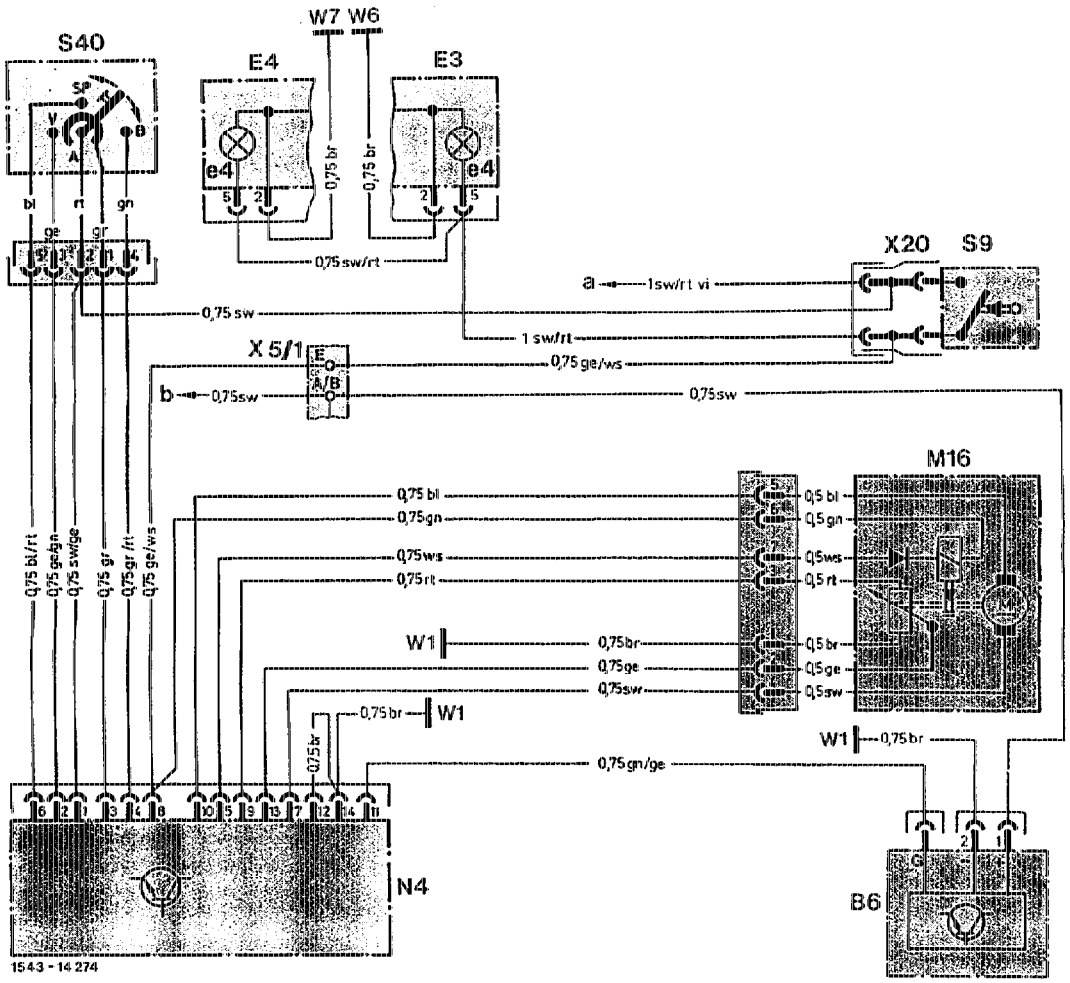

Model 201.122 as of vehicle ident end no. A 384360/F 286573

B6	Hall-effect speed sensor	W1	Main ground (behind instrument cluster)
E3	Left tail lamp unit	W6	Ground, left rear wheelhouse in trunk
E3e4	Stop lamp	W7	Ground, right rear wheelhouse in trunk
E4	Right tail lamp unit	X5/1	Terminal block, interior (5-pole)
E4e4	Stop lamp		A/B ident. colour black
M16	Cruise control actuator		E ident. colour yellow
N4	Cruise control amplifier	X20	Connector, stop lamp switch
S9	Stop lamp switch	a	On electrical center, coupling field C, line-up 1
S40	Cruise control switch	b	On electrical center, coupling field L, line-up 1
	V Decelerate/set		
	B Accelerate/set		
	SB Resume		
	A Off		

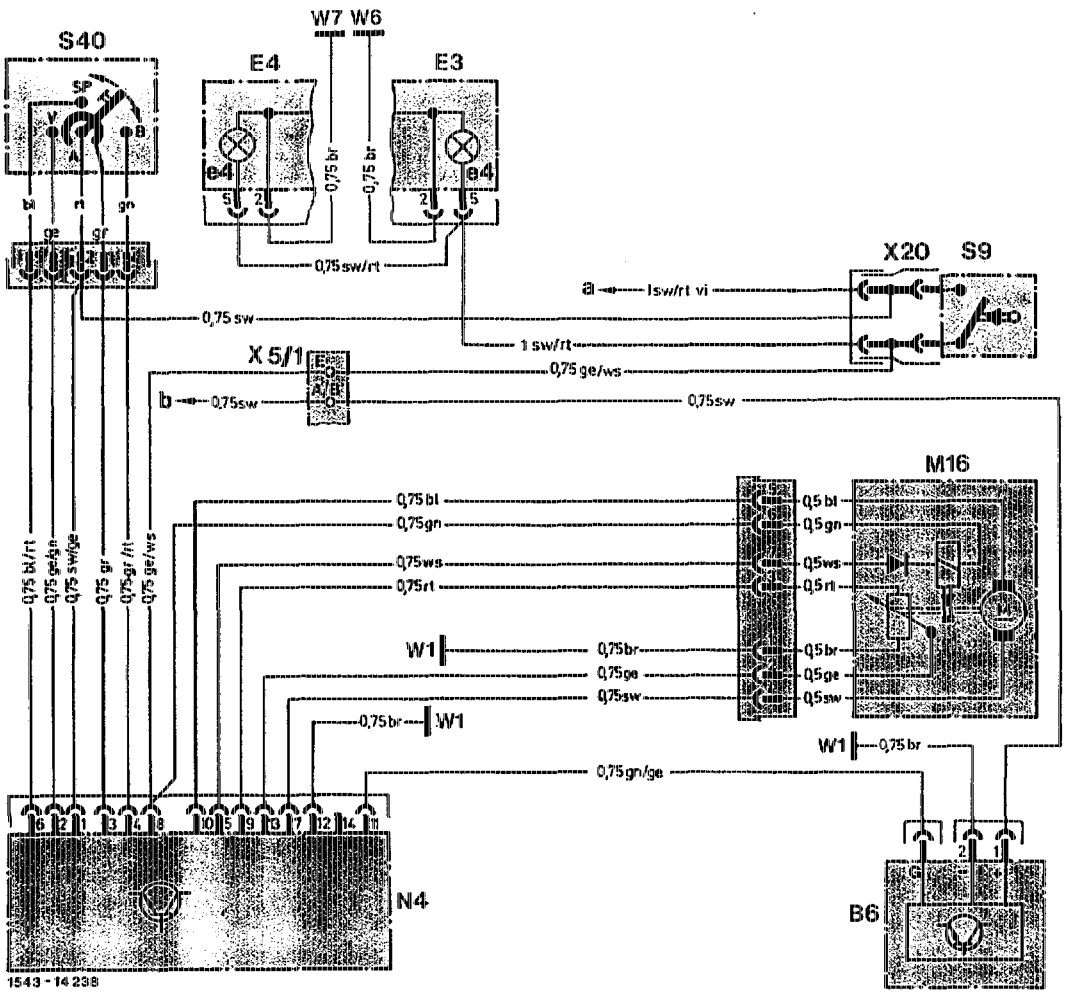

Model 201.126 as of vehicle ident end no. A 384360/F 286573, except: (USA) as of 1986

B6	Hall-effect speed sensor
E3	Left tail lamp unit
E3e4	Stop lamp
E4	Right tail lamp unit
E4e4	Stop lamp
M16	Cruise control actuator
N4	Cruise control amplifier
S9	Stop lamp switch
S40	Cruise control switch
	V Decelerate/set
	B Accelerate/set
	SB Resume
	A Off
W1	Main ground (behind instrument cluster)
W6	Ground, left rear wheelhouse in trunk
W7	Ground, right rear wheelhouse in trunk
X5/1	Terminal block, interior (5-pole)
	A/B ident. colour black
	E ident. colour yellow
X20	Connector, stop lamp switch
a	On electrical center, coupling field C, line-up 1
b	On electrical center, coupling field L, line-up 1

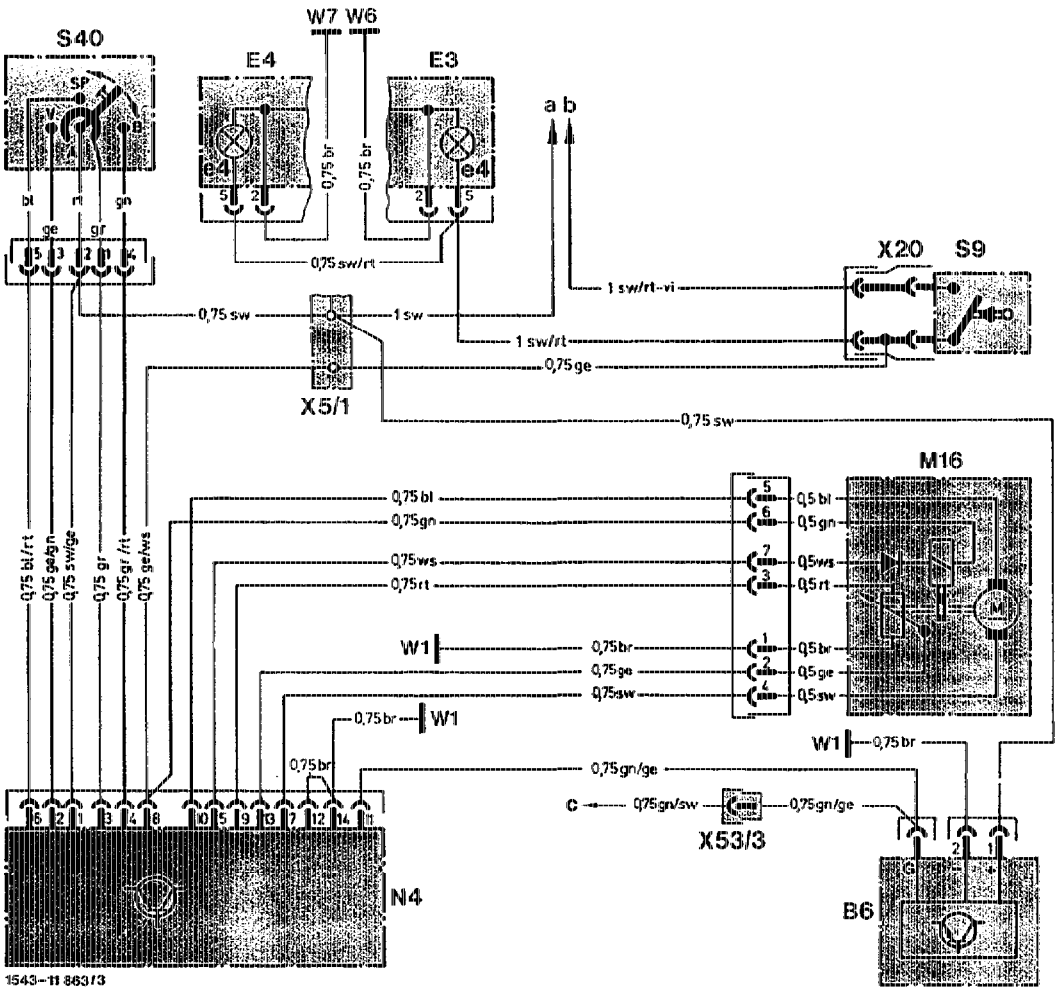

Model 201.126 (USA) 1986 up to vehicle ident. end no. F 229814

B6	Hall-effect speed sensor	W1	Main ground (behind instrument cluster)
E3	Left tail lamp unit	W6	Ground, left rear wheelhouse in trunk
E3e4	Stop lamp	W7	Ground, right rear wheelhouse in trunk
E4	Right tail lamp unit	X5/1	Terminal block, interior (5-pole)
E4e4	Stop lamp	X20	Connector, stop lamp switch
M16	Cruise control actuator	X53/3	Connector, Hall-effect sensor/EGR (1-pole)
N4	Cruise control amplifier	a	On electrical center, coupling field L, line-up 1
S9	Stop lamp switch	b	On electrical center, coupling field C, line-up 1
S40	Cruise control switch	c	On control unit exhaust gas recirculation line-up 5
	V Decelerate/set		
	B Accelerate/set		
	SB Resume		
	A Off		

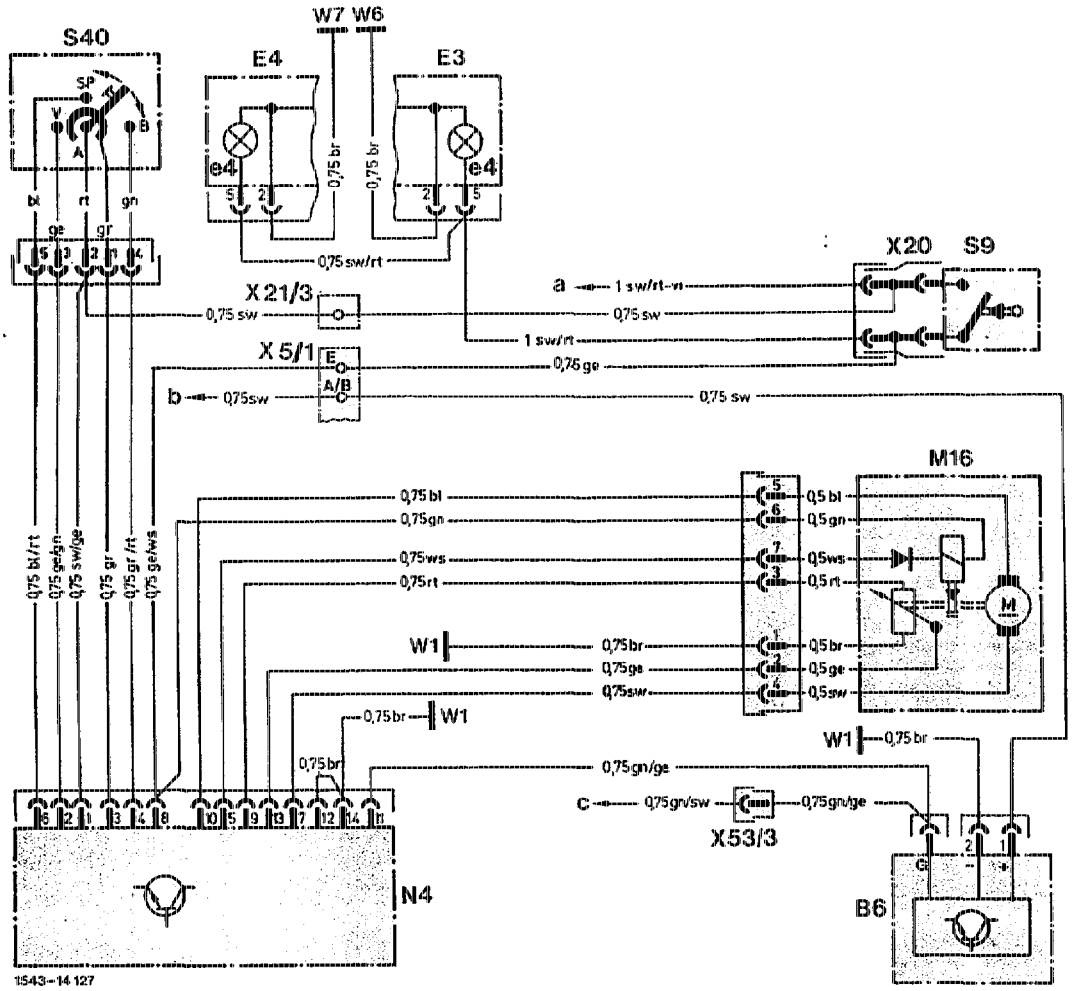

Model 201.126 (USA) 1986, 1987 as of vehicle ident end no. F 229815
up to vehicle ident. end no. F 286572

B6	Hall-effect speed sensor	W1	Main ground (behind instrument cluster)
E3	Left tail lamp unit	W6	Ground, left rear wheelhouse in trunk
E3e4	Stop lamp	W7	Ground, right rear wheelhouse in trunk
E4	Right tail lamp unit	X5/1	Terminal block, interior (5-pole)
E4e4	Stop lamp		A/B ident. colour black
M16	Cruise control actuator		E ident. colour yellow
N4	Cruise control amplifier	X20	Connector, stop lamp switch
S9	Stop lamp switch	X21/3	Terminal block, stop lamp switch/cruise control (1-pole)
S40	Cruise control switch	X53/3	Connector, Hall-effect sensor/EGR (1-pole)
	V Decelerate/set	a	On electrical center, coupling field C, line-up 1
	B Accelerate/set	b	On electrical center, coupling field L, line-up 1
	SB Resume	c	On control unit exhaust gas recirculation line-up 5
	A Off		

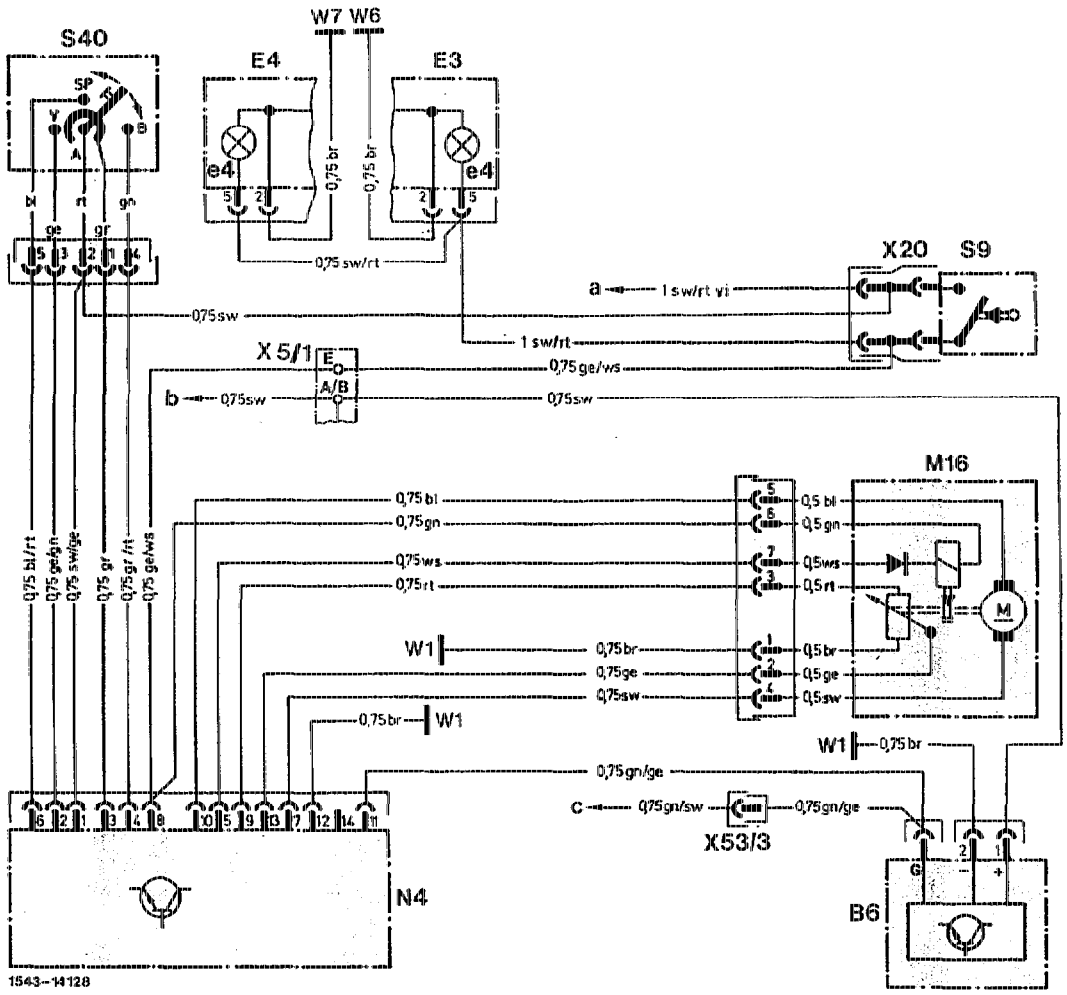

Model 201.126 (USA) 1987 as of vehicle ident end no. F 286573

B6	Hall-effect speed sensor
E3	Left tail lamp unit
E3e4	Stop lamp
E4	Right tail lamp unit
E4e4	Stop lamp
M16	Cruise control actuator
N4	Cruise control amplifier
S9	Stop lamp switch
S40	Cruise control switch
	V Decelerate/set
	B Accelerate/set
	SB Resume
	A Off
W1	Main ground (behind instrument cluster)
W6	Ground, left rear wheelhouse in trunk
W7	Ground, right rear wheelhouse in trunk
X5/1	Terminal block, interior (5-pole)
	A/B ident. colour black
	E ident. colour yellow
X20	Connector, stop lamp switch
X53/3	Connector, Hall-effect sensor/EGR (1-pole)
a	On electrical center, coupling field C, line-up 1
b	On electrical center, coupling field L, line-up 1
c	On control unit exhaust gas recirculation line-up 5

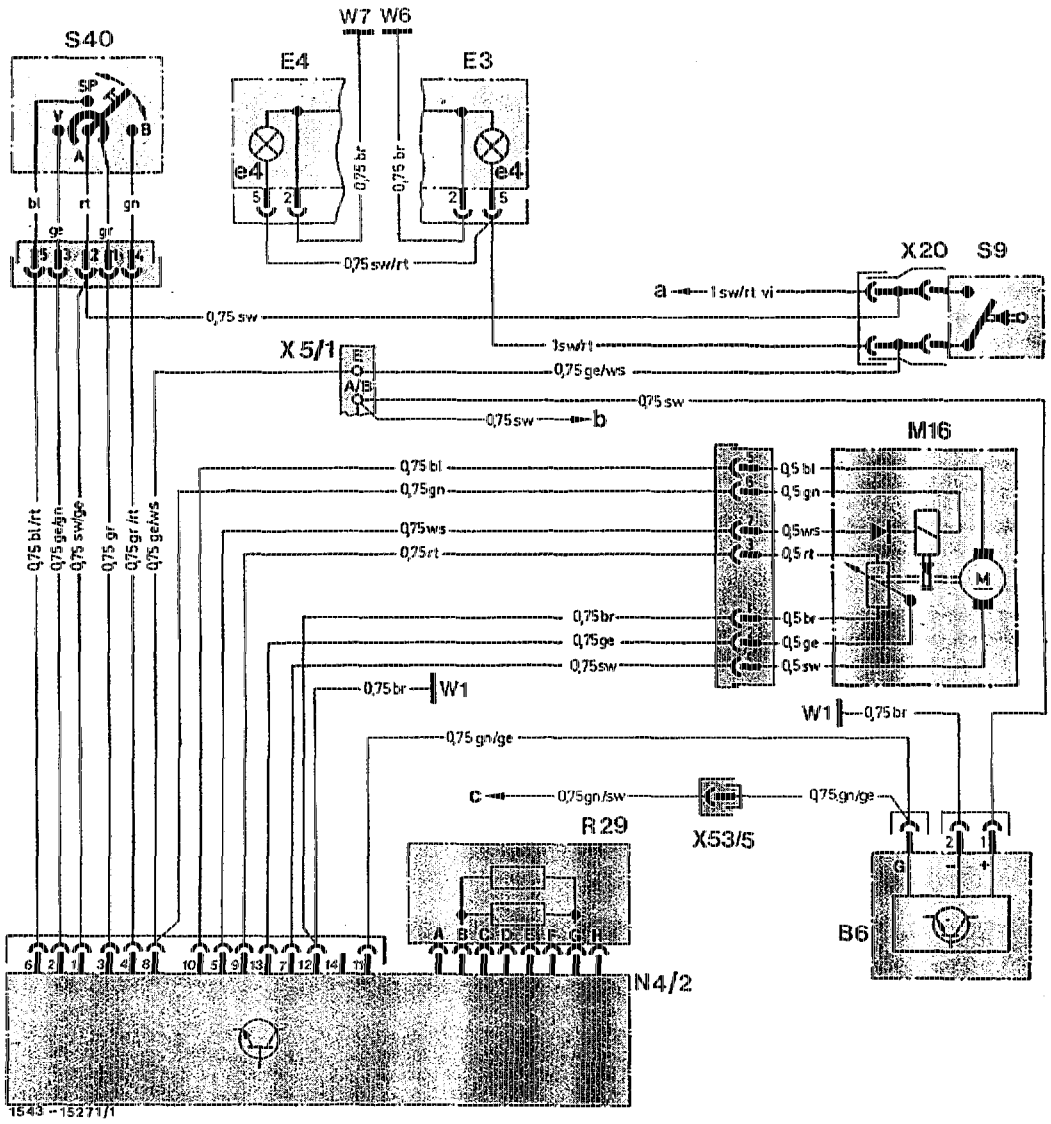

Model 201.126 (USA) as of 1988

B6	Hall-effect speed sensor	W1	Main ground (behind instrument cluster)
E3	Left tail lamp unit	W6	Ground, left rear wheelhouse in trunk
E3e4	Stop lamp	W7	Ground, right rear wheelhouse in trunk
E4	Right tail lamp unit	X5/1	Terminal block, interior (5-pole)
E4e4	Stop lamp		A/B ident. colour black
M16	Cruise control actuator		E ident. colour yellow
N4/2	Cruise control amplifier with reference resistor	X20	Connector, stop lamp switch
R29	Cruise control reference resistor	X53/3	Connector, Hall-effect sensor/EGR (1-pole)
S9	Stop lamp switch	a	On electrical center, coupling field C, line-up 1
S40	Cruise control switch	b	On electrical center, coupling field L, line-up 1
	V Decelerate/set	c	On control unit exhaust gas recirculation line-up 1
	B Accelerate/set		
	SB Resume		
	A Off		

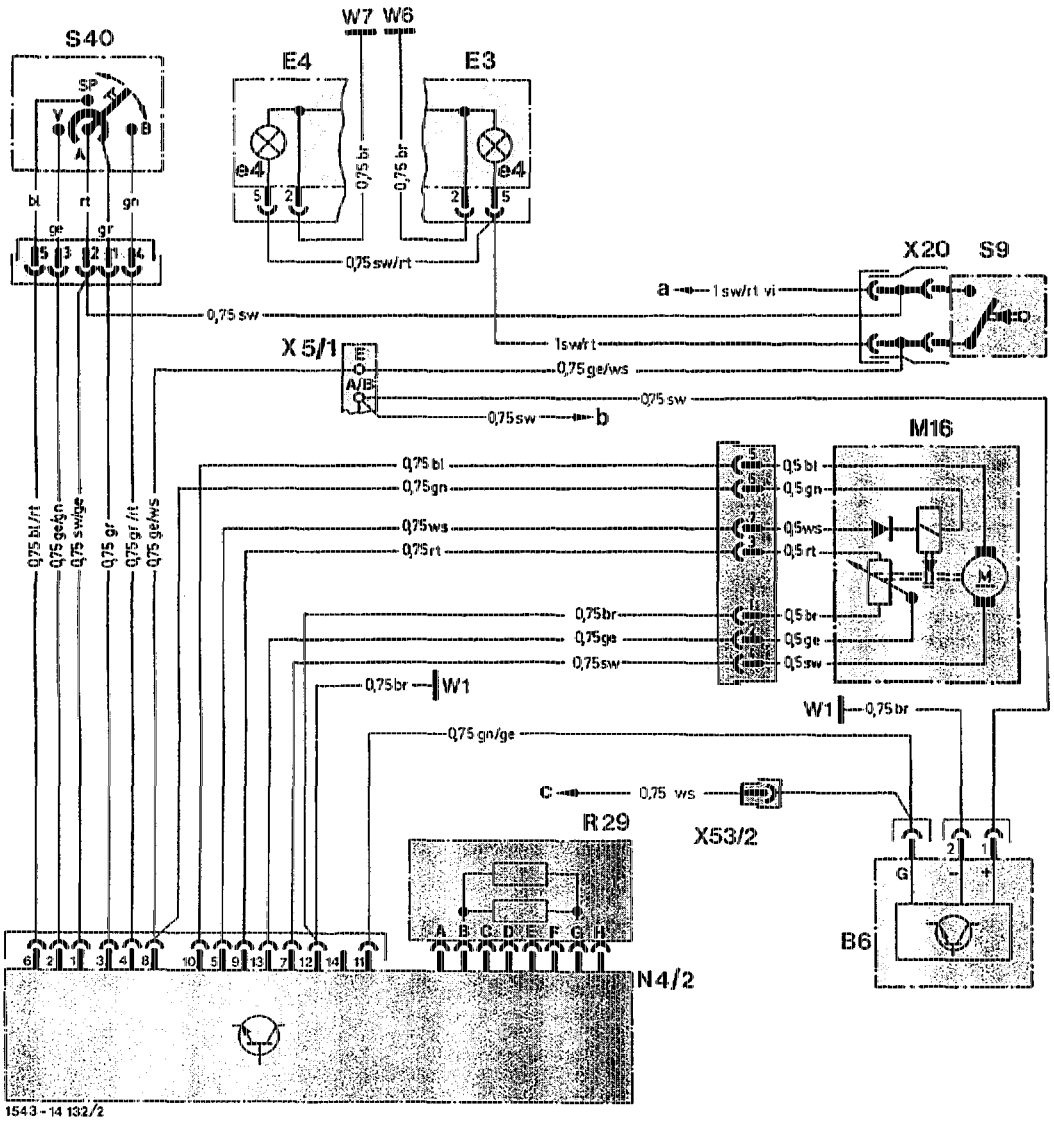

Model 201.128 except (USA) up to approx. 08/89

B6	Hall-effect speed sensor	W1	Main ground (behind instrument cluster)
E3	Left tail lamp unit	W6	Ground, left rear wheelhouse in trunk
E3e4	Stop lamp	W7	Ground, right rear wheelhouse in trunk
E4	Right tail lamp unit	X5/1	Terminal block, interior (5-pole)
E4e4	Stop lamp		A/B ident. colour black
M16	Cruise control actuator		E ident. colour yellow
N4/2	Cruise control amplifier with reference resistor	X20	Connector, stop lamp switch
R29	Cruise control reference resistor	X53/2	Connector, Hall-effect sensor/ Tempomat (cruise control)
S9	Stop lamp switch		
S40	Cruise control switch	a	On electrical center, coupling field C, line-up 1
	V Decelerate/set	b	On electrical center, coupling field L, line-up 1
	B Accelerate/set	c	On outside temperature indicator A1p4
	SB Resume		
	A Off		

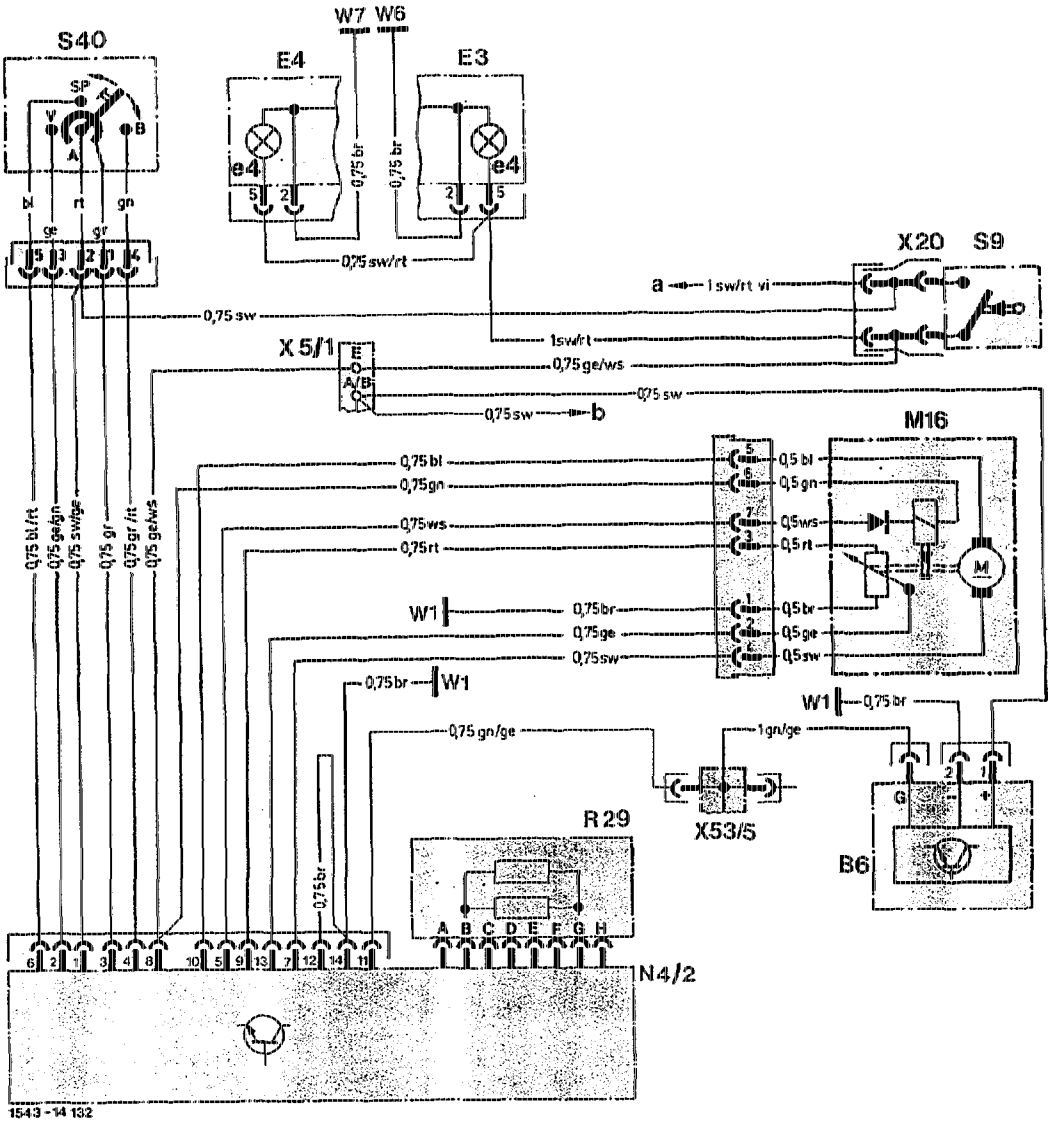

Model 201.128 (USA) 1987

B6	Hall-effect speed sensor	W1	Main ground (behind instrument cluster)
E3	Left tail lamp unit	W6	Ground, left rear wheelhouse in trunk
E3e4	Stop lamp	W7	Ground, right rear wheelhouse in trunk
E4	Right tail lamp unit	X5/1	Terminal block, interior (5-pole)
E4e4	Stop lamp		A/B ident. colour black
M16	Cruise control actuator		E ident. colour yellow
N4/2	Cruise control amplifier with reference resistor	X20	Connector, stop lamp switch
R29	Cruise control reference resistor	X53/5	Multipoint connector, Hall-effect sensor
S9	Stop lamp switch	a	On electrical center, coupling field C, line-up 1
S40	Cruise control switch	b	On electrical center, coupling field L, line-up 1
	V Decelerate/set		
	B Accelerate/set		
	SB Resume		
	A Off		

H. Model 201 with diesel engine and manual transmission

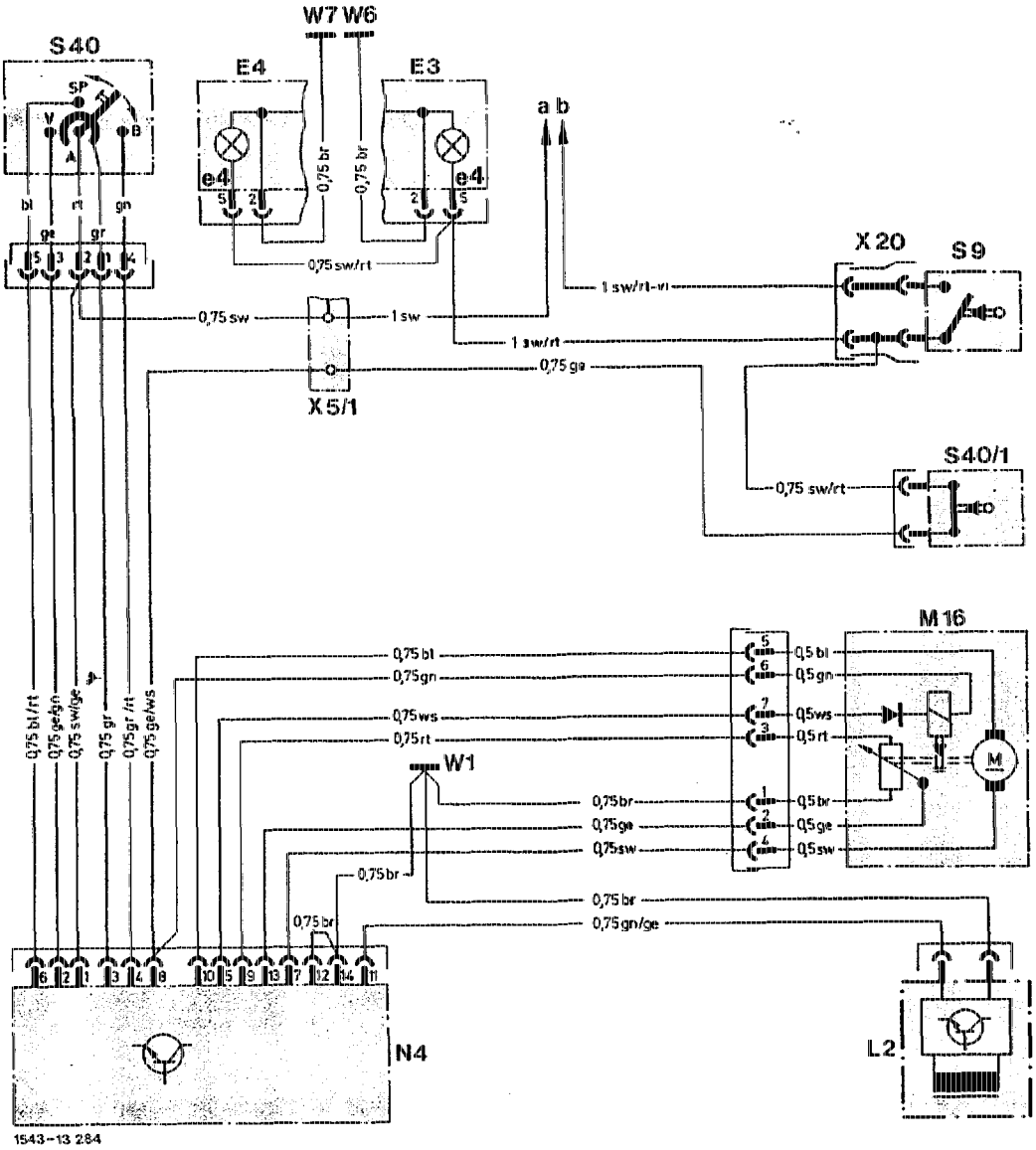

Model 201.122 (USA) 1984 except California

E3	Left tail lamp unit
E3e4	Stop lamp
E4	Right tail lamp unit
E4e4	Stop lamp
L2	Road speed sensor
M16	Cruise control actuator
N4	Cruise control amplifier
S9	Stop lamp switch
S40	Cruise control switch
	V Decelerate/set
	B Accelerate/set
	SB Resume
	A Off
S40/1	Clutch pedal switch (cruise control)
W1	Main ground (behind instrument cluster)
W6	Ground, left rear wheelhouse in trunk
W7	Ground, right rear wheelhouse in trunk
X5/1	Terminal block, interior (5-pole)
X20	Connector, stop lamp switch
a	On electrical center, coupling field L, line-up 1
b	On electrical center, coupling field C, line-up 1

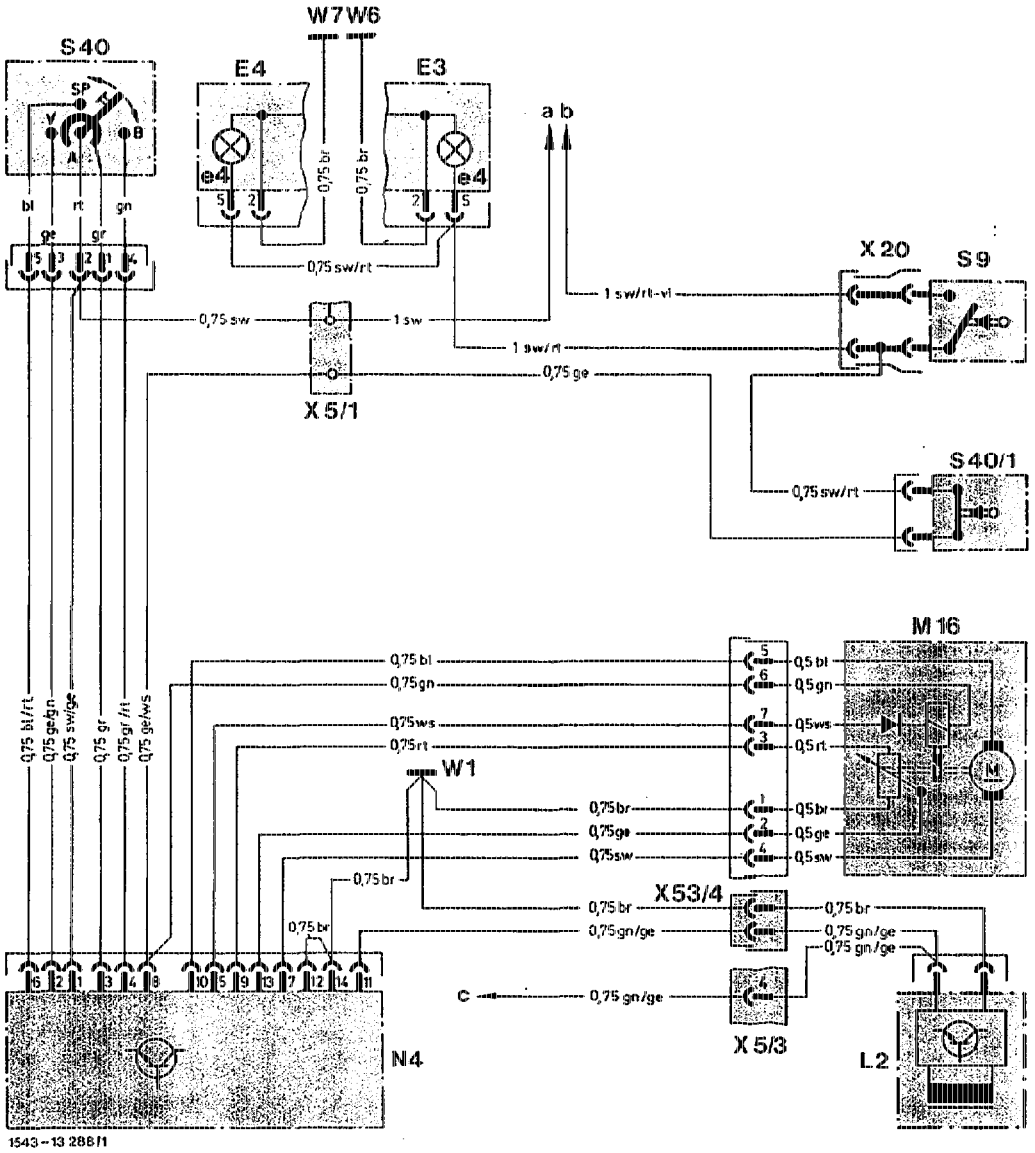

Model 201.122 (USA) 1985 up to vehicle ident. end no. A 209722/F 089783 and California 1984

E3	Left tail lamp unit	S40/1	Clutch pedal switch (cruise control)
E3e4	Stop lamp	W1	Main ground (behind instrument cluster)
E4	Right tail lamp unit	W6	Ground, left rear wheelhouse in trunk
E4e4	Stop lamp	W7	Ground, right rear wheelhouse in trunk
L2	Road speed sensor	X5/1	Terminal block, interior (5-pole)
M16	Cruise control actuator	X5/3	Connector, interior/A/C compressor harness
N4	Cruise control amplifier	X20	Connector, stop lamp switch
S9	Stop lamp switch	X53/4	Connector, inductive sensor/EGR (2-pole)
S40	Cruise control switch	a	On electrical center, coupling field L, line-up 1
	V Decelerate/set	b	On electrical center, coupling field C, line-up 1
	B Accelerate/set	c	On control unit exhaust gas recirculation line-up 5
	SB Resume		
	A Off		

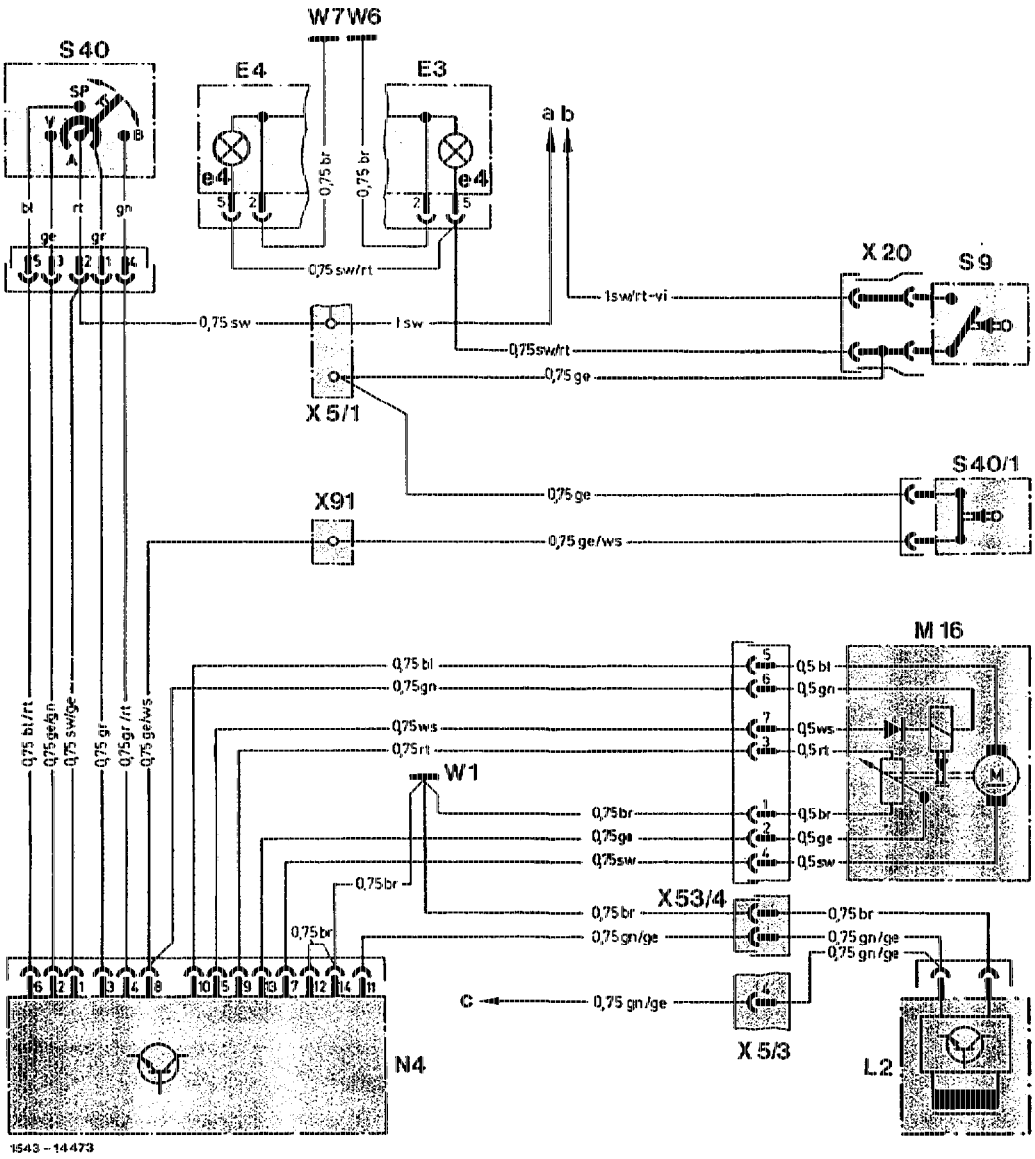

Model 201.122 (USA) 1985 as of vehicle ident end no. A 209723/F 089774

E3	Left tail lamp unit	W1	Main ground (behind instrument cluster)
E3e4	Stop lamp	W6	Ground, left rear wheelhouse in trunk
E4	Right tail lamp unit	W7	Ground, right rear wheelhouse in trunk
E4e4	Stop lamp	X5/1	Terminal block, interior (5-pole)
L2	Road speed sensor	X5/3	Connector, interior/A/C compressor harness
M16	Cruise control actuator	X20	Connector, stop lamp switch
N4	Cruise control amplifier	X53/4	Connector, inductive sensor/EGR (2-pole)
S9	Stop lamp switch	X91	Terminal block, clutch pedal/cruise control 1-pole
S40	Cruise control switch	a	On electrical center, coupling field L, line-up 1
	V Decelerate/set	b	On electrical center, coupling field C, line-up 1
	B Accelerate/set	c	On control unit exhaust gas recirculation line-up 5
	SB Resume		
	A Off		
S40/1	Clutch pedal switch (cruise control)		

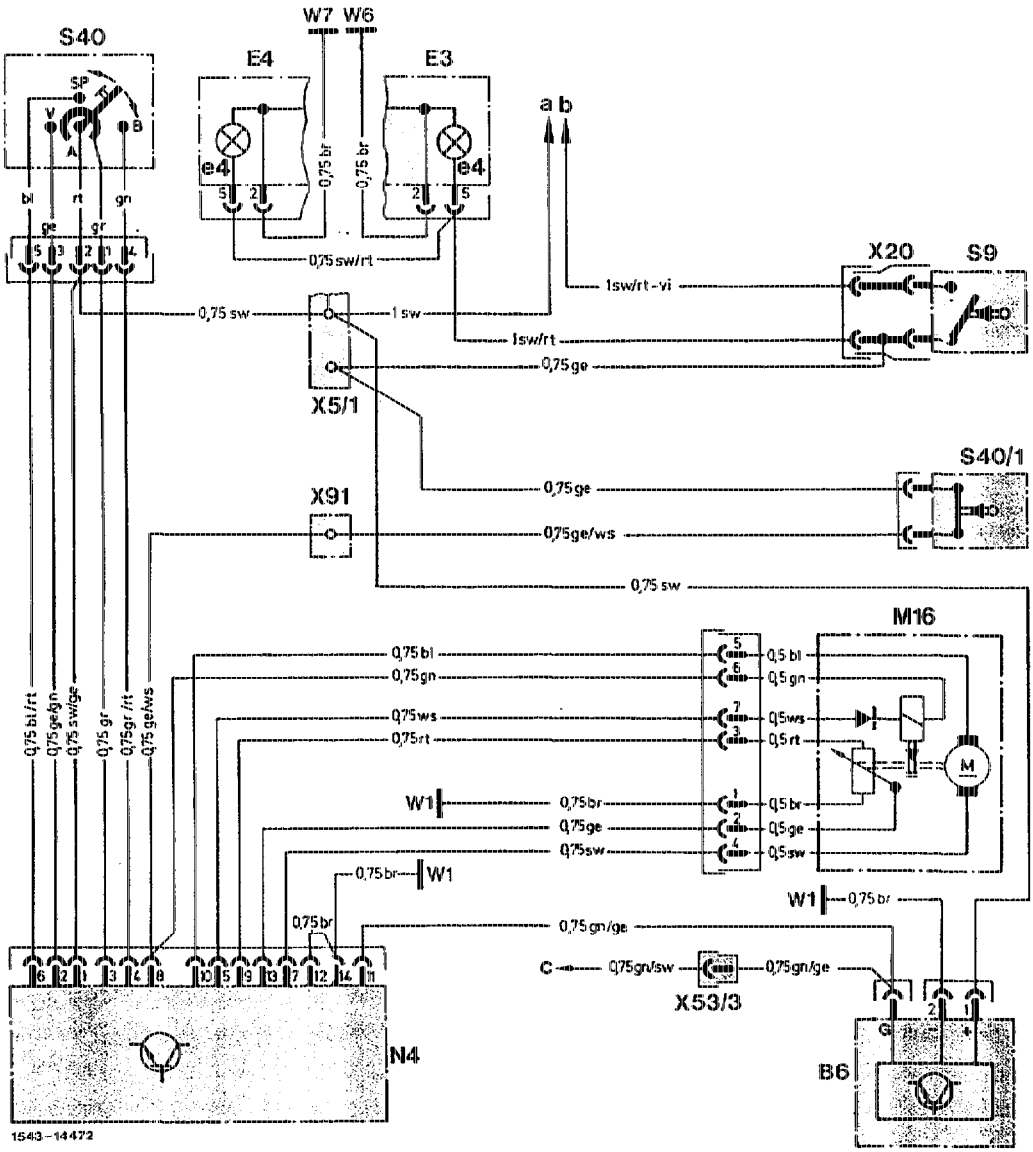

Model 201.126 (USA) 1986 up to vehicle ident. end no. F 229814

B6	Hall-effect speed sensor	S40/1	Clutch pedal switch (cruise control)
E3	Left tail lamp unit	W1	Main ground (behind instrument cluster)
E3e4	Stop lamp	W6	Ground, left rear wheelhouse in trunk
E4	Right tail lamp unit	W7	Ground, right rear wheelhouse in trunk
E4e4	Stop lamp	X5/1	Terminal block, interior (5-pole)
M16	Cruise control actuator	X20	Connector, stop lamp switch
N4	Cruise control amplifier	X53/3	Connector, Hall-effect sensor/EGR (1-pole)
S9	Stop lamp switch	X91	Terminal block, clutch pedal/cruise control 1-pole
S40	Cruise control switch	a	On electrical center, coupling field L, line-up 1
	V Decelerate/set	b	On electrical center, coupling field C, line-up 1
	B Accelerate/set	c	On control unit exhaust gas recirculation line-up 5
	SB Resume		
	A Off		

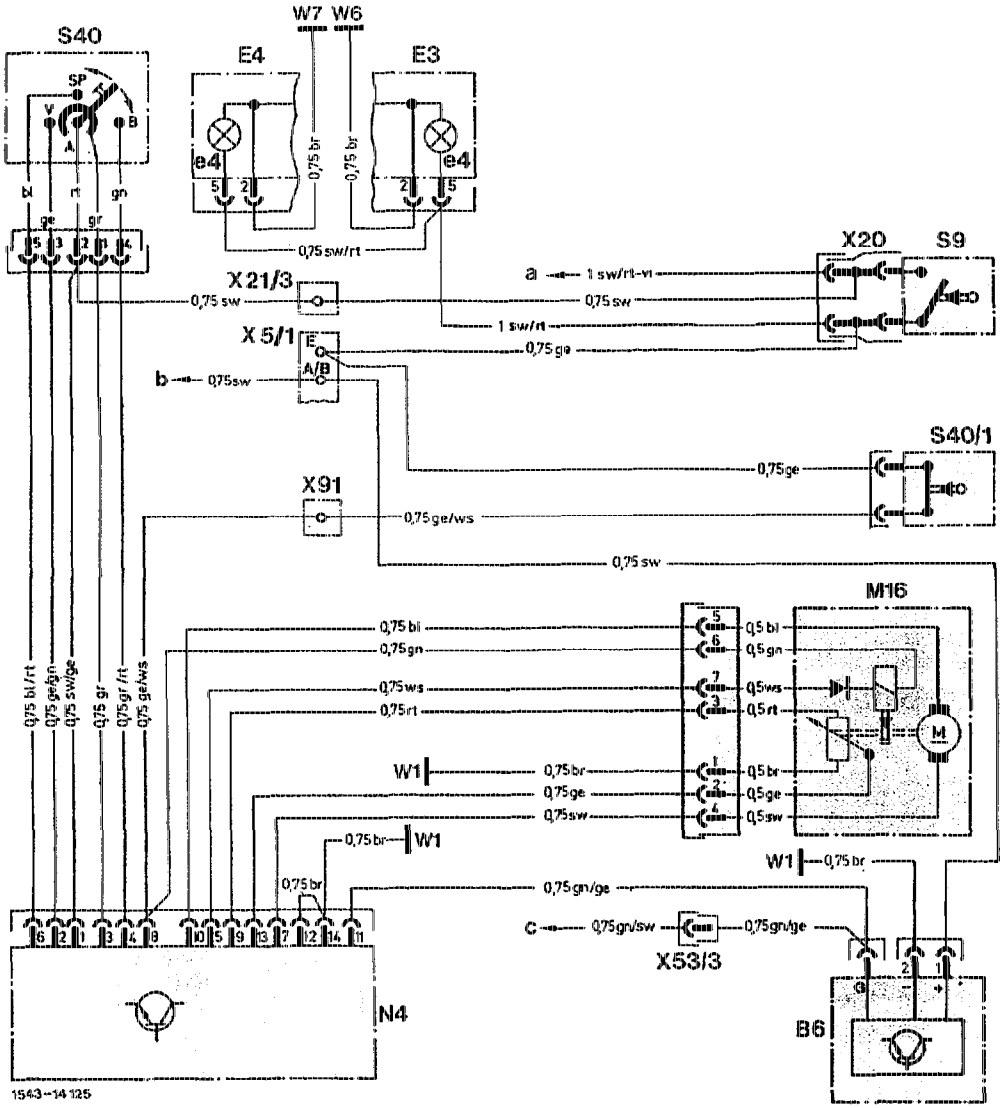

Model 201.126 (USA) 1986, 1987 as of vehicle ident end no. F 229815
up to vehicle ident. end no. F 286572

B6	Hall-effect speed sensor
E3	Left tail lamp unit
E3e4	Stop lamp
E4	Right tail lamp unit
E4e4	Stop lamp
M16	Cruise control actuator
N4	Cruise control amplifier
S9	Stop lamp switch
S40	Cruise control switch
	V Decelerate/set
	B Accelerate/set
	SB Resume
	A Off
S40/1	Clutch pedal switch (cruise control)
W1	Main ground (behind instrument cluster)
W6	Ground, left rear wheelhouse in trunk
W7	Ground, right rear wheelhouse in trunk
X5/1	Terminal block, interior (5-pole) A/B ident colour black E ident colour yellow
X20	Connector, stop lamp switch
X21/3	Terminal block, stop lamp switch/cruise control (1-pole)
X53/3	Connector, Hall-effect sensor/EGR (1-pole)
X91	Terminal block, clutch pedal/cruise control 1-pole
a	On electrical center, coupling field C, line-up 1
b	On electrical center, coupling field L, line-up 1
c	On control unit exhaust gas recirculation line-up 5

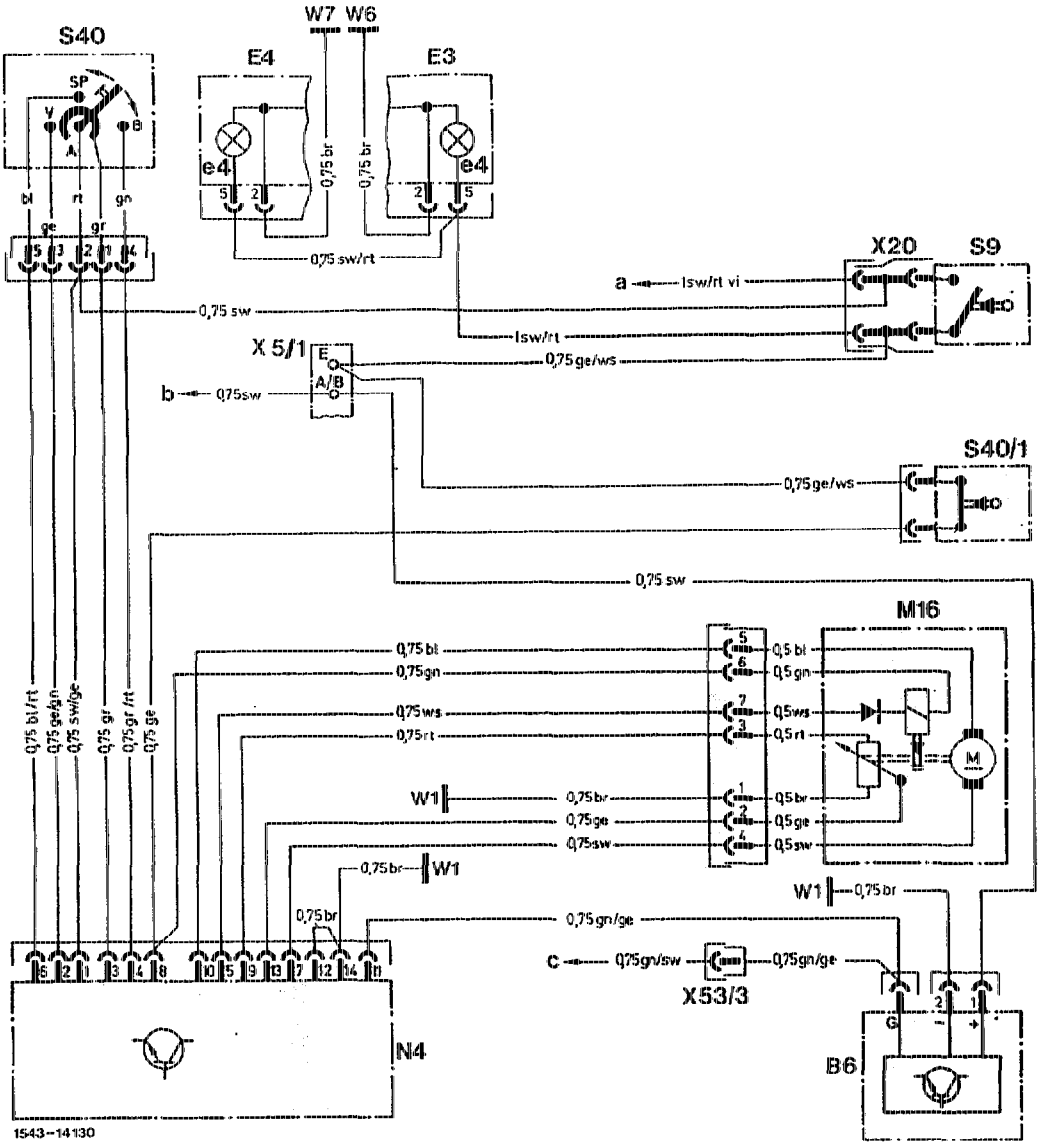

Model 201.126 (USA) 1987 as of vehicle ident end no. F 286573

B6	Hall-effect speed sensor	W1	Main ground (behind instrument cluster)
E3	Left tail lamp unit	W6	Ground, left rear wheelhouse in trunk
E3e4	Stop lamp	W7	Ground, right rear wheelhouse in trunk
E4	Right tail lamp unit	X5/1	Terminal block, interior (5-pole)
E4e4	Stop lamp		A/B ident. colour black
M16	Cruise control actuator		E ident. colour yellow
N4	Cruise control amplifier	X20	Connector, stop lamp switch
S9	Stop lamp switch	X53/3	Connector, Hall-effect sensor/EGR (1-pole)
S40	Cruise control switch	a	On electrical center, coupling field C, line-up 1
	V Decelerate/set	b	On electrical center, coupling field L, line-up 1
	B Accelerate/set	c	On control unit exhaust gas recirculation line-up 5
	SB Resume		
	A Off		
S40/1	Clutch pedal switch (cruise control)		

30–7300 Testing Tempomat cruise control, vehicles with ASR

Operation no. of operation texts and work units or standard texts and flat rates:

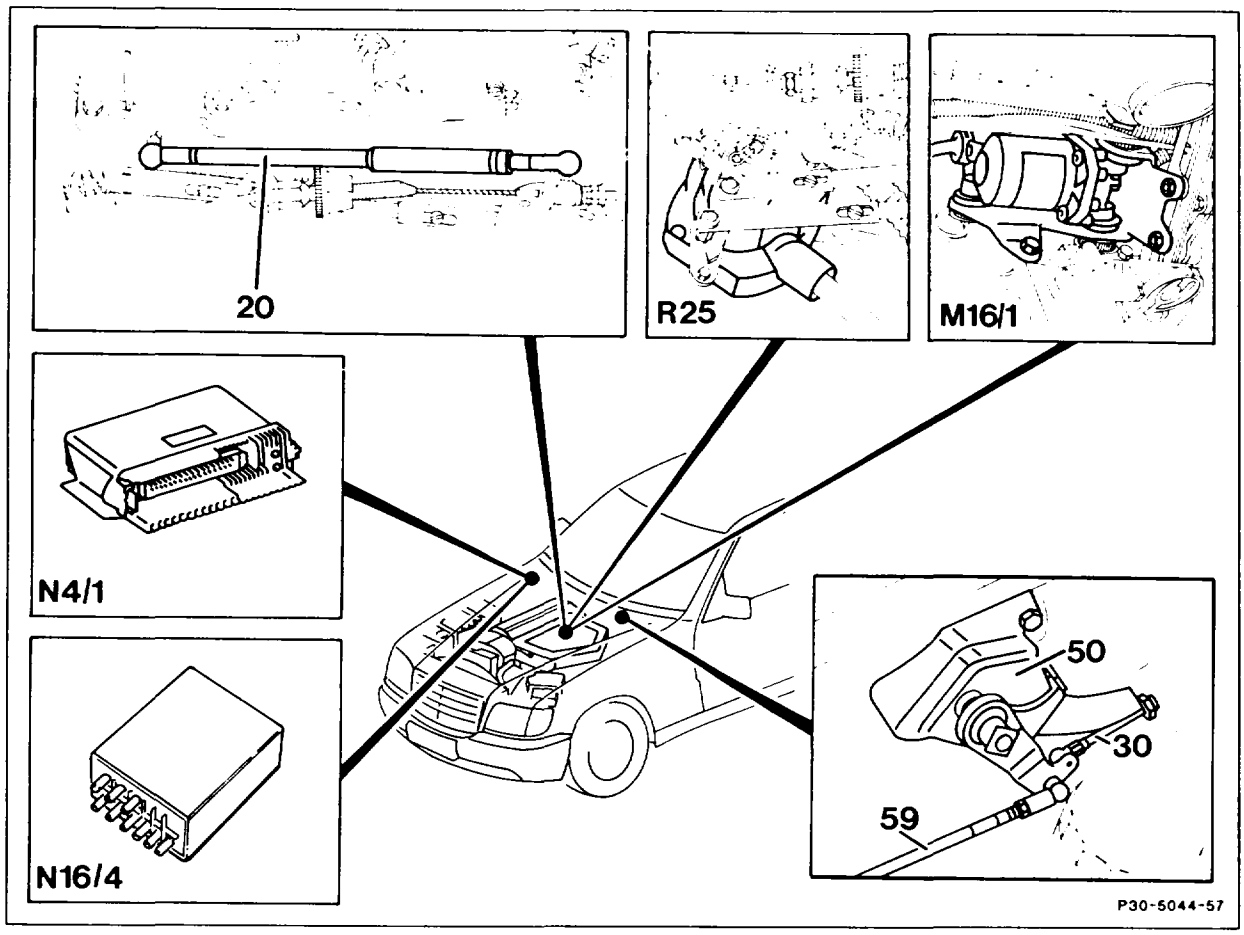

Model 124

M16/1	Electronic accelerator pedal (EFP) actuator	20	Idle travel rod (redundancy rod)
N4/1	Electronic accelerator pedal (EFP) control unit	30	Bowden cable (RHD, only models 126.024/025)
N16/4	Fuel pump and kickdown shutoff relay	50	Fire wall bearing (RHD, only models 126.024/025)
R25	Electronic accelerator pedal (EFP) position sensor	59	Connecting rod (RHD, only models 126.024/025)

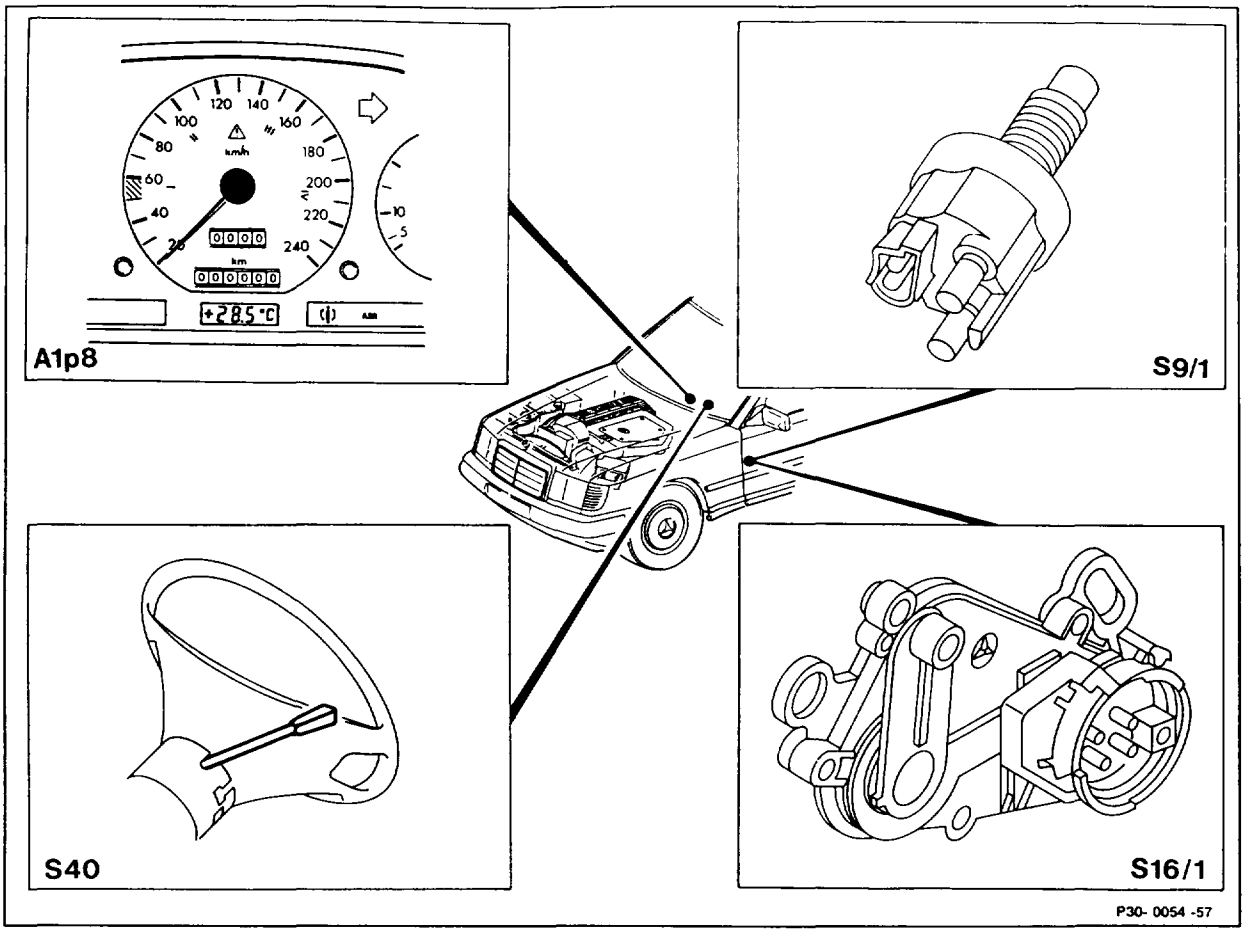

Model 124

A1p8	Electronic speedometer
S9/1	4MATIC/ASD stop light switch
S16/1	Starter lockout and reversing light switch
S40	Tempomat cruise control switch
V	Decelerate/set
B	Accelerate/set
SP	Memory
A	Off

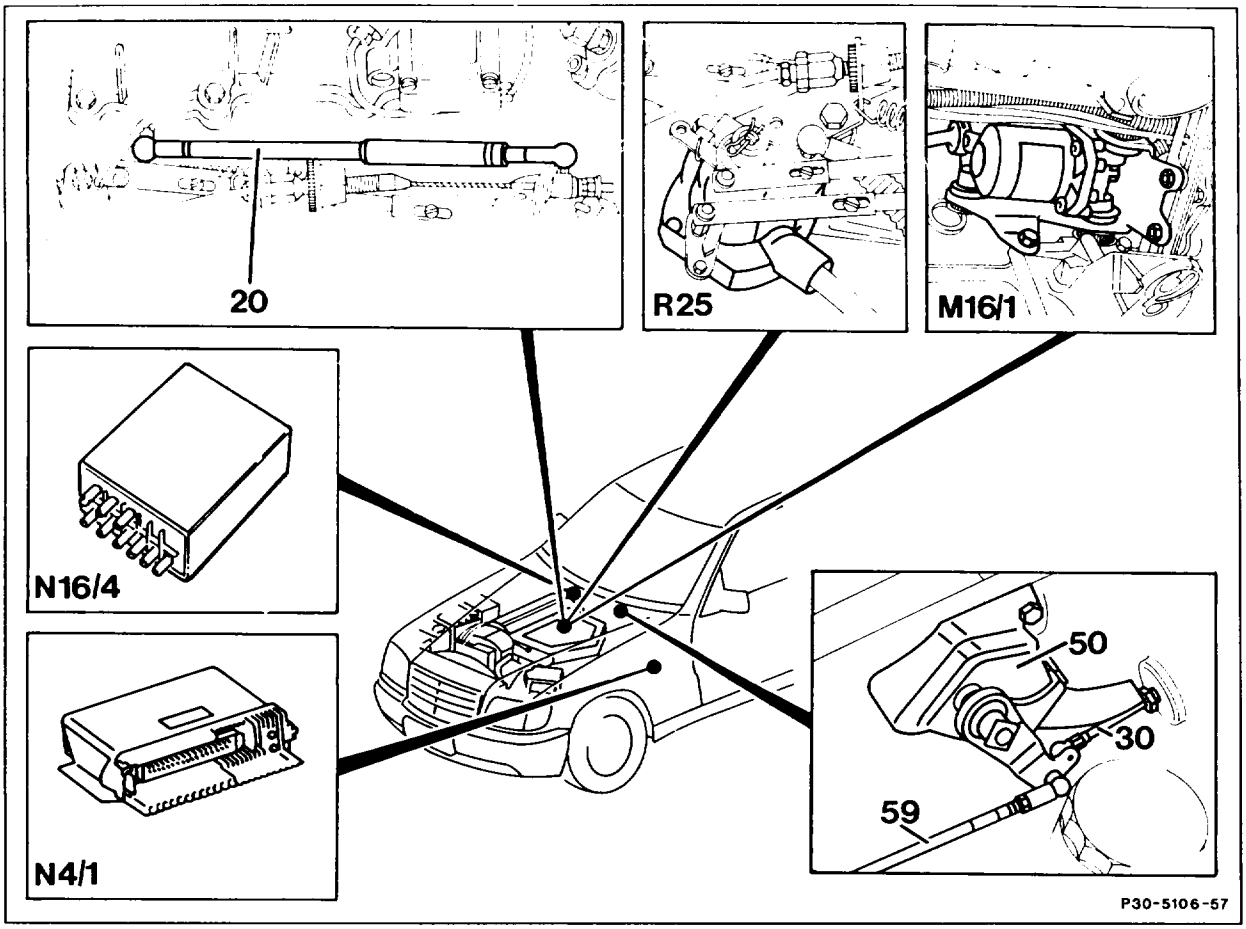

Model 126

M16/1	Electronic accelerator pedal (EFP) actuator	20	Idle travel rod (redundancy rod)
N4/1	Electronic accelerator pedal (EFP) in left footwell	30	Bowden cable (RHD, only models 126.024/025)
N16/4	Fuel pump and kickdown shutoff relay	50	Fire wall bearing (RHD, only models 126.024/025)
R25	Electronic accelerator pedal (EFP) position sensor	59	Connecting rod (RHD, only models 126.024/025)

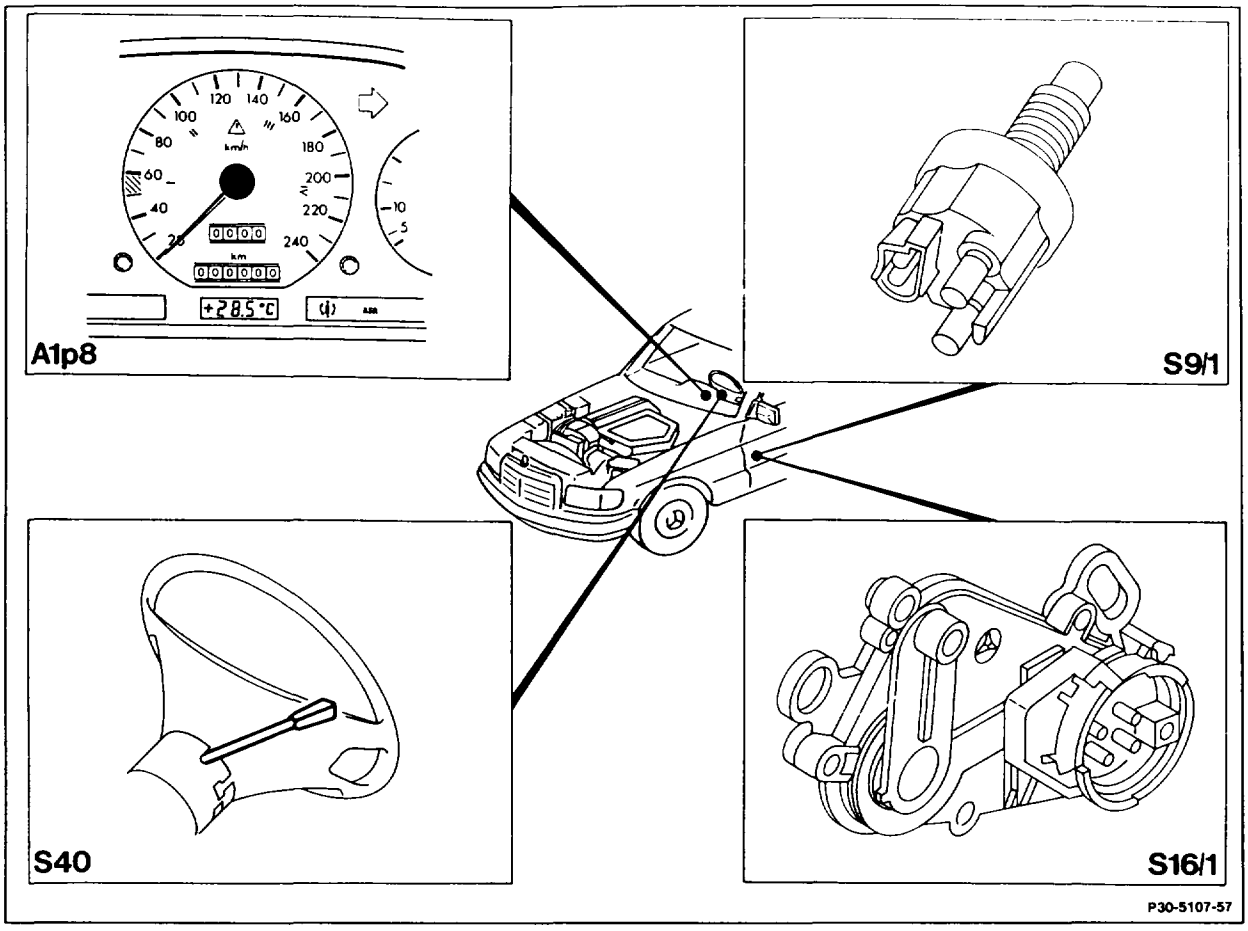

Model 126

A1p8	Electronic speedometer
S9/1	4MATIC/ASD stop light switch
S16/1	Starter lockout and reversing light switch
S40	Tempomat cruise control switch
V	Decelerate/set
B	Accelerate/set
SP	Memory
A	Off

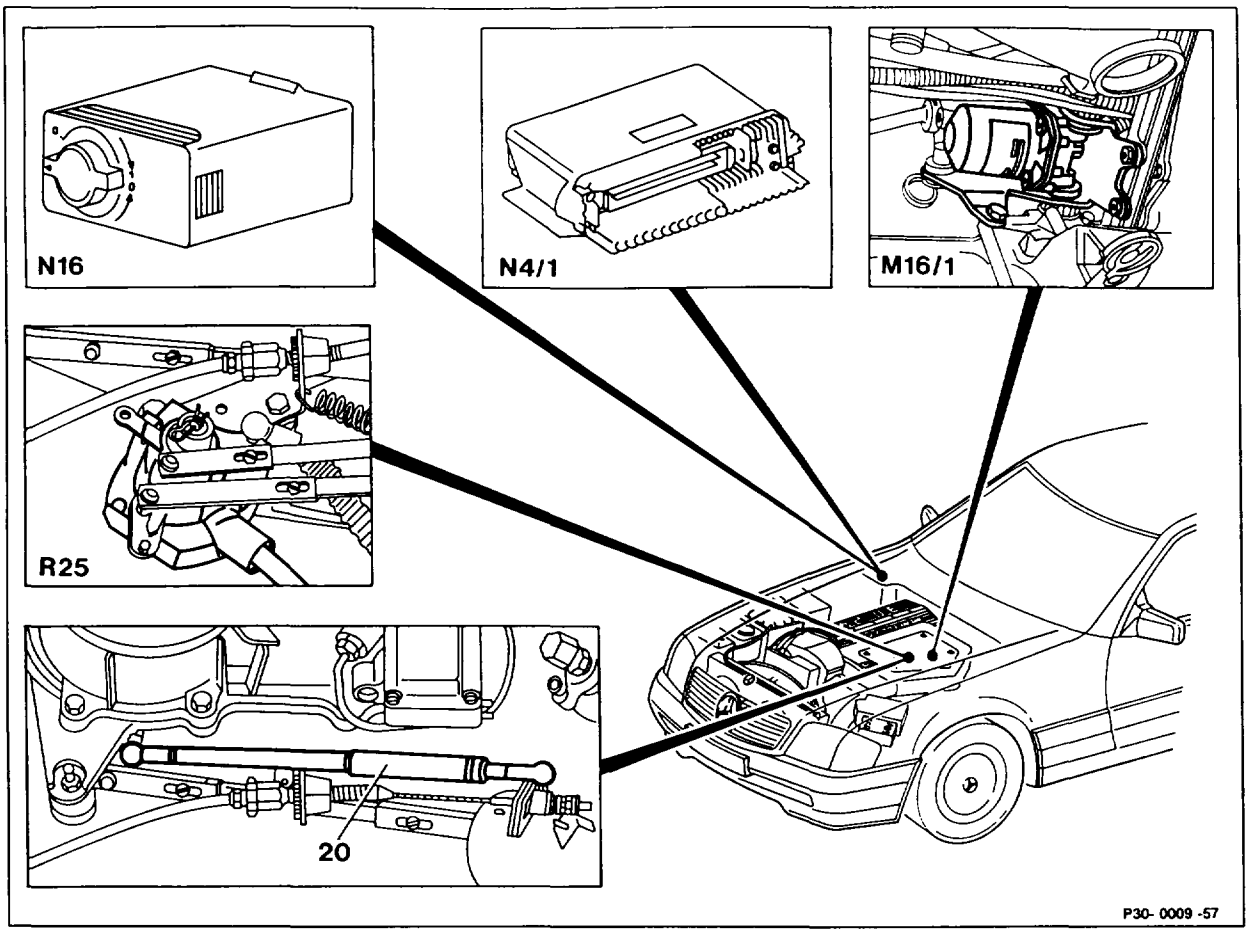

Model 129

M16/1	Electronic accelerator pedal (EFP) actuator	R25	Electronic accelerator pedal (EFP) position sensor
N4/1	Electronic accelerator pedal (EFP) control unit		
N16	Engine systems control unit MAS	20	Idle travel rod (redundancy rod)

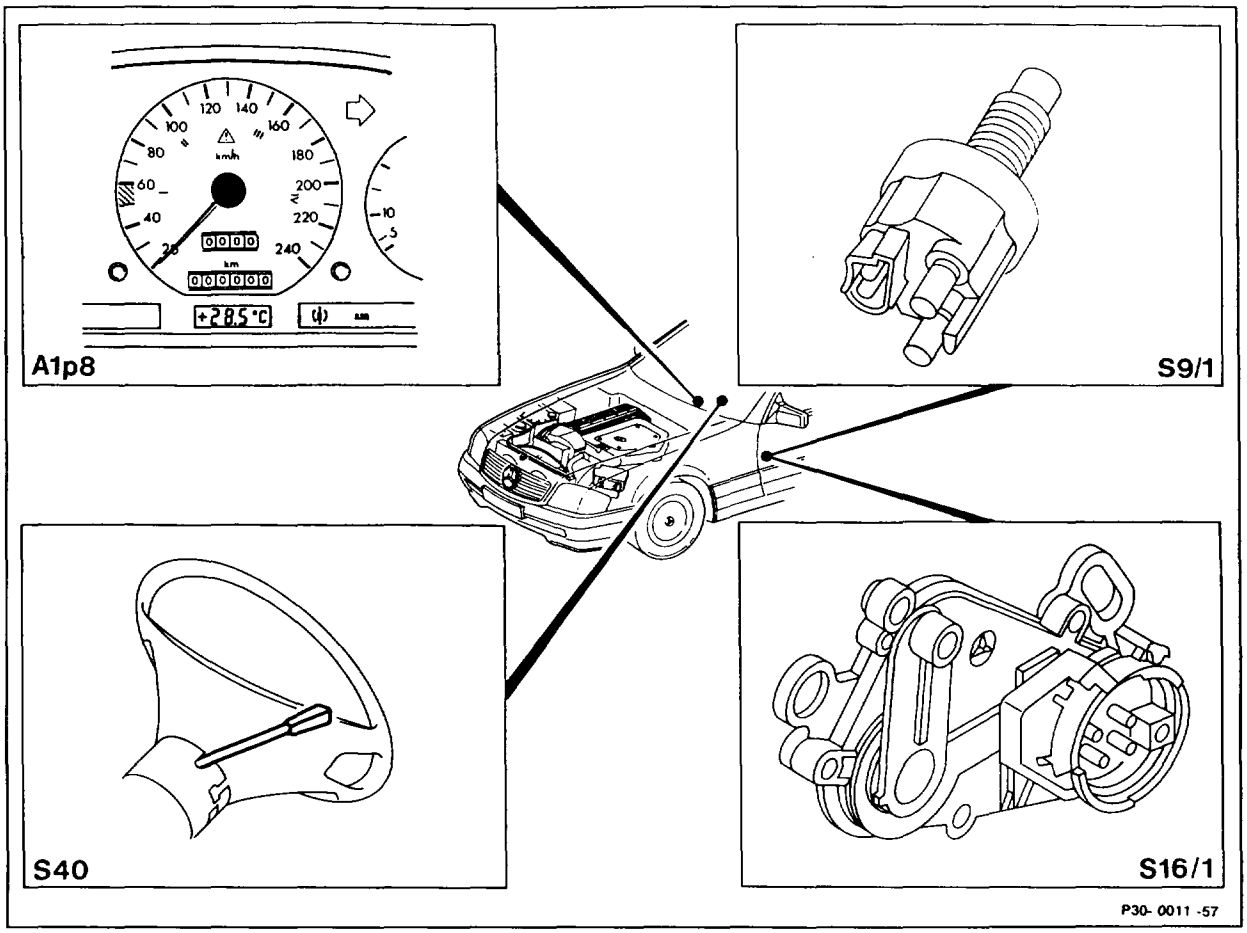

Model 129

A1p8	Electronic speedometer
S9/1	ASD/ASR stop light switch
S16/1	Starter lockout and reversing light switch
S40	Tempomat cruise control switch
V	Decelerate/set
B	Accelerate/set
SP	Memory
A	Off

Contact assignment at electronic accelerator pedal control unit

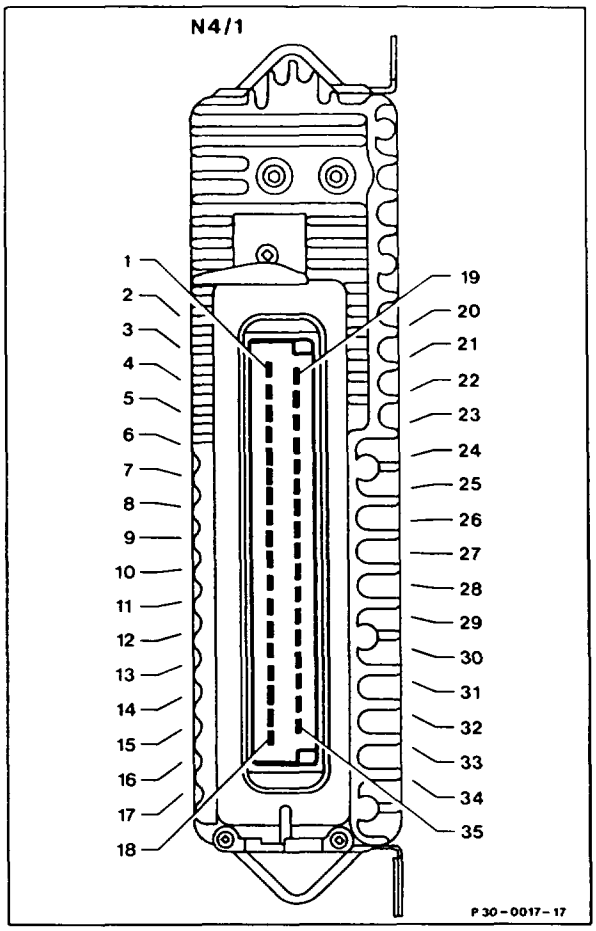

1 Voltage supply terminal 15 unfused
2 Voltage supply terminal 15 unfused
3 Electronic accelerator pedal actuator (engine)
4 Electronic accelerator pedal actuator (engine)
5 Position sensor potentiometer (ground)
6 Actuator, electonic accelerator pedal potentiometer (ground)
7 Do not create contact!
8 Idle switching signal to KE control unit (N3)
9 Position sensor potentiometer voltage supply (+)
10 Not assigned
11 Battery ground (W10)
12 Electronic speedometer, road speed signal
13 Safety switch position sensor
14 Stop light switch
15 Position sensor potentiometer (wiper signal)
16 Tempomat cruise control switch (decelerate/set)
17 Not assigned
18 Tempomat cruise control switch (memory)
19 Do not create contact
20 Electronic accelerator pedal actuator (engine)
21 Electronic accelerator pedal actuator (engine)
22 Battery ground (W10)
23 Battery ground (W10)
24 Not assigned
25 Not assigned
26 Actuator, electronic accelerator pedal potentiometer (voltage supply)
27 Not assigned
28 Actuator, electronic accelerator pedal potentiometer (wiper signal)
29 Electronic accelerator pedal actuator (safety switch)
30 Fuel pump relay terminal 15, contact 9 or engine systems control unit terminal 15u, contact 10
31 To ABS/ASR control unit (throttle valve actual value)
32 Tempomat cruise control switch (accelerate/set)
33 Starter lockout and reversing light switch, Drive mode "R"
34 From ABS/ASR control unit (throttle valve set value)
35 Tempomat cruise control switch (OFF)

Special tools

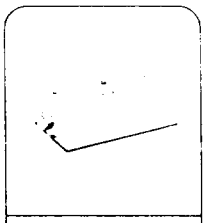

124 589 00 21 00
54

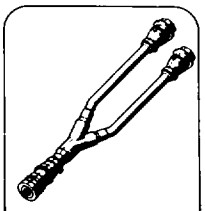

645 589 00 63 00
42 54

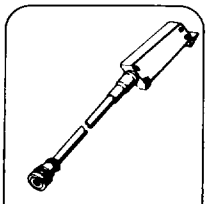

645 589 02 63 00
42 54

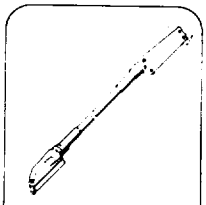

645 589 03 63 00
54

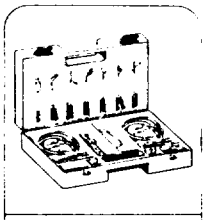

201 589 00 99 00
15 54

Commercially available tools and testers (see Workshop Equipment Manual)

Designation	e.g. Make, order no.
Multimeter	Sun, DMM-5
Frequency generator	Sun, DTR-8416

The stud (arrow) on the test cable 645 589 02 63 00 must be sawn off.

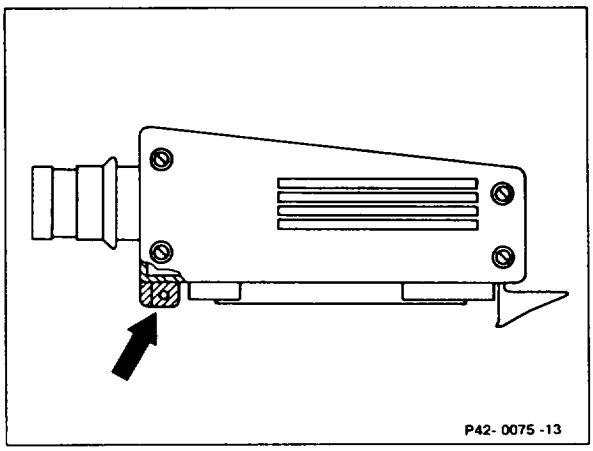

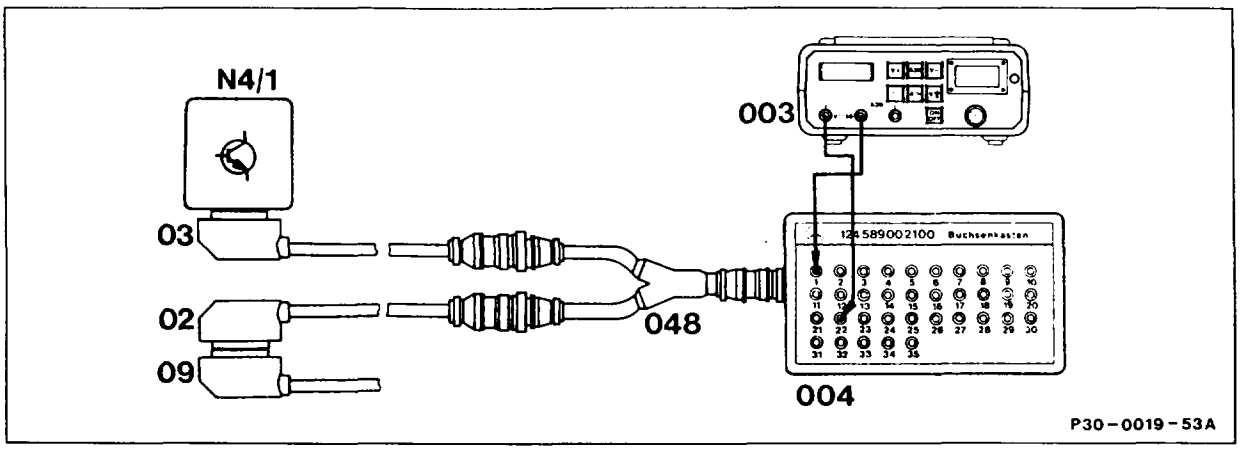

Connection diagram with multimeter for Tempomat cruise control test program

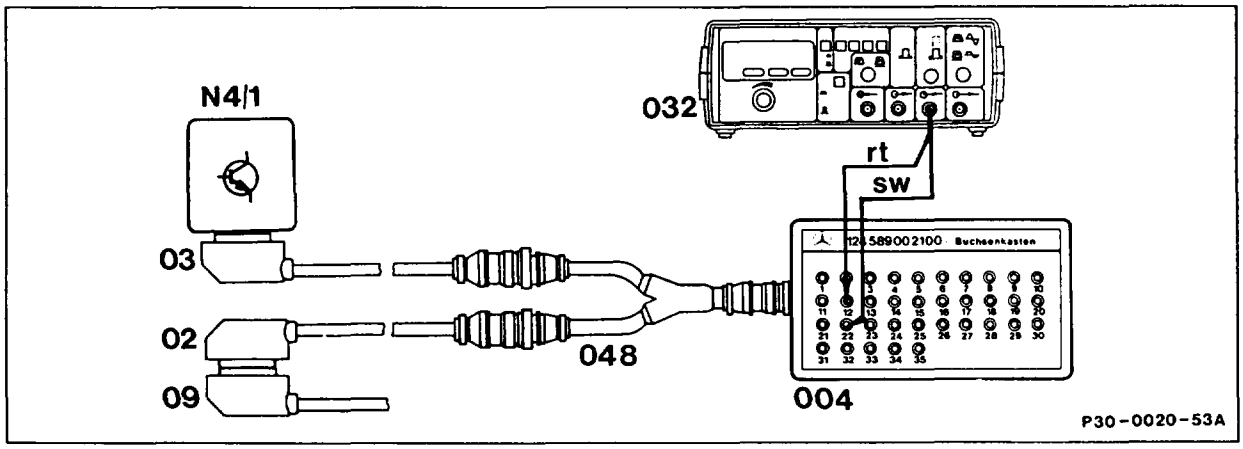

Connection diagram with frequency generator for Tempomat cruise control test program

02	Test cable	645 589 02 63 00	003	Multimeter	
03	Test cable	645 589 03 63 00	004	Contact box	35-pin
09	Vehicle cable harness (electronic accelerator pedal control unit)		048	Test cable	645 589 00 63 00
			N4/1	Electronic accelerator pedal (EFP) control unit	

Symbols for testers

35-pin contact box

Contact

Symbols for test mode with multimeter

Multimeter DC voltage mode

Function generator square-wave signal shape.

Preconditions for test

- Accelerator control linkage correctly set and check for ease of movement (30–1010).
- Battery voltage 11–14 V.

Note

If the specification of a main test step, e.g. test step 1.0, is in order, continue with the next main test step, e.g. test step 2.0.

See appropriate wiring diagram volume for wiring diagrams.

Test step	Test scope	Test connection	Operation/ Requirement	Specification	Possible cause/Remedy
1.0	**Tempomat cruise control pushbutton (S40)**	N4/1 22 — 16	Ignition: **ON** Pushbutton not pressed. Position "decelerate."	< 1 V 11–14 V	Open circuit in wiring, Tempomat cruise control pushbutton (S40)
1.1		N4/1 22 — 18	Ignition: **ON** Pushbutton not pressed. Position "store."	< 1 V 11–14 V	Open circuit in wiring, Tempomat cruise control pushbutton (S40)

Test step	Test scope	Test connection	Operation/ Requirement	Specification	Possible cause/Remedy
1.2		N4/1 22 — 32	Ignition: **ON** Pushbutton switch not pressed. Position "accelerate."	< 1 V 11–14 V	Open circuit in wiring, Tempomat cruise control pushbutton (S40)
1.3		N4/1 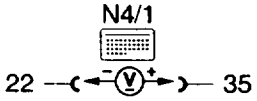 22 — 35	Ignition: **ON** Pushbutton switch not pressed. Position "off."	11–14 V < 1 V	Open circuit in wiring, Tempomat cruise control pushbutton (S40)
2.0	**Stop light switch (S9/1)**	N4/1 22 — 14	Ignition: **OFF** Brake pedal not pressed. Brake pedal pressed.	< 10 Ω > 500 kΩ	Open circuit in wiring, Stop light switch (S9/1)
3.0	**Road speed signal**	N4/1 22 — 12	Ignition: **ON** Drive on dynamometer (> 20 km/h)	> 1 V	Open circuit in wiring, Electronic speedometer (A1p8) or Hall-effect sensor (B6) on models 124, 201

Test step	Test scope	Test connection	Operation/ Requirement	Specification	Possible cause/Remedy
4.0	**Actuator function with Tempomat**	N4/1 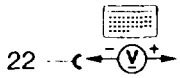 22 — 12	Remove instrument cluster (A1), Unplug connector "1" (only in model 129). Connect frequency generator, set f >150 Hz U_S = 5 V. Ignition: **ON**		Electronic accelerator pedal control unit (N4/1)
			Position "accelerate"	Electronic accelerator pedal actuator move to full load direction.	
			Position "decelerate"	Electronic accelerator pedal actuator move to idle direction.	Electronic accelerator pedal control unit (N4/1)
			Position "off"	Electronic accelerator pedal actuator must move into idle position.	Electronic accelerator pedal control unit (N4/1)

Test step	Test scope	Test connection	Operation/ Requirement	Specification	Possible cause/Remedy
[4.0]		N4/1 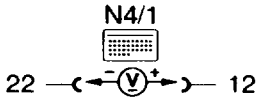 22 — 12	Position "store."	Electronic accelerator pedal actuator must move into specified position.	Electronic accelerator pedal control unit (N4/1)
			Depress brake pedal.	Electronic accelerator pedal actuator must move into idle speed position.	Electronic accelerator pedal control unit (N4/1)

Installation Instructions

Trailer coupling 31.2

Model 124 T-sedan left hand drive (except USA)

The trailer couplings with removable ball neck released by us have been tested and accepted according to German licensing regulations. For all the remaining countries the respective valid regulations must be observed.

See service information group 31 for details on trailer loads (operation with trailer).

⚠
On model 124.193/393 with air conditioner or automatic climate control, a transmission fluid cooler with auxiliary fan must be installed for a trailer load above 1500 kg total weight (refer to Installation Instructions 27.1).

The vertical pressure of trailer hitch against ball of trailer coupling should not exceed the specified value on maker's plate of trailer coupling.

Electrical parts with 7-pin socket without constant current line or with 13-pin socket and constant current line can be optionally installed.

The Installation Instructions of the manufacturer included with installation set and the MB booklet provided with the Operating instructions must be handed to customer.

⚠
Remove body sealing compound and underfloor protection from all body mounting points of trailer coupling and respective fastening screws.

Paint bright body parts e.g. on bores with zinc dust paint.

The micro-encapsulated screws are intended for final assembly and may be used only once. If the micro-encapsulated screws are unscrewed they must always be replaced with new ones.

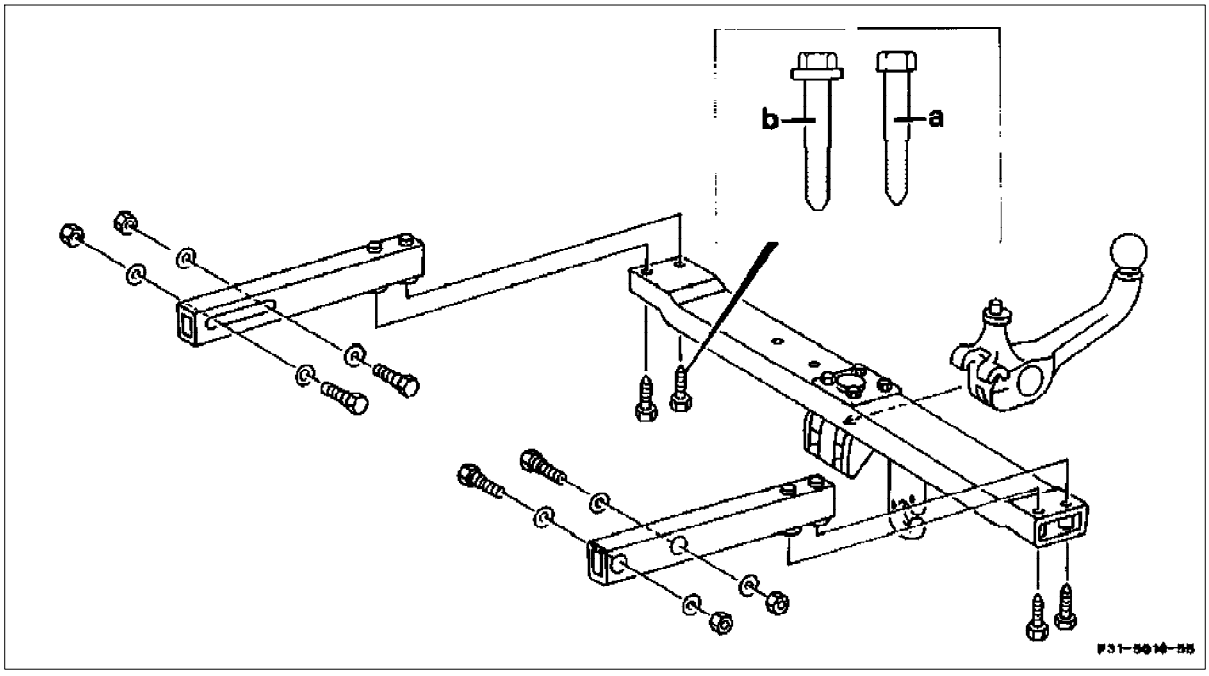

Tightening torques in Nm

Screws without collar (a) M12 3 1.5 3 70 secured by micro-encapsulation	85
Screws with collar (b) M12 x 1.5 x 70 secured by micro-encapsulation	110
Screws M12 3 60 secured by micro-encapsulation	85
Nut M10 self-locking	43

The Installation Instructions are sub-divided into the following sections:

A. Installing electrical parts with 7-pin socket (without constant current line terminal 30), vehicles up to approx. 07/86

B. Installing electrical parts with 7-pin socket (without constant current line terminal 30), vehicles starting approx. 08/86

C. Installing electrical parts with 13-pin socket and constant current line terminal 30, all vehicles

D. Installing trailer coupling

E. Wiring diagrams

F. Parts ordering note

A. Installing electrical parts with 7-pin socket (without constant current line terminal 30), vehicles up to approx. 07/86

1 Disconnect ground line on battery.

2 Remove left hand front seat.

3 Remove rear seat cushion.

4 Remove left hand covers on front and rear entrance.

5 Remove lower panelling on left hand center pillar.

6 Release left hand belt end of front safety belt.

7 Remove left hand fastening clips of rear floor covering.

8 Force off left hand outer covering (a) and unscrew hinge (b).

9 Remove spare wheel cover and spare wheel.

10 Remove left hand panelling of rear wheel assembly.

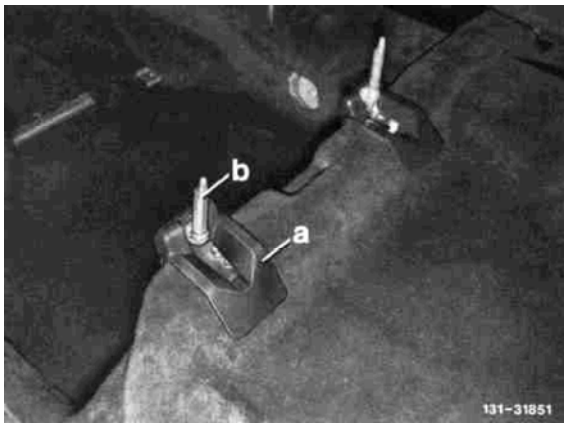

11 Raise cargo floor (a) and cover (b) underneath, removing clips (c) for this purpose.

12 Open right hand side wall flap and remove fluid container for rear wiper.

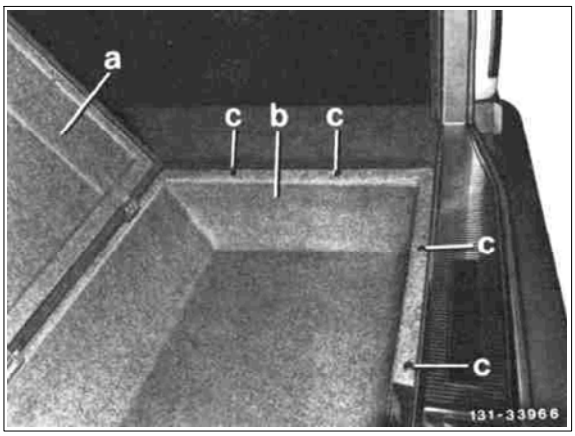

13 Remove covers (a and b) under instrument panel.

14 Remove instrument cluster (c).

15 Remove lining of left hand front wall pillar.

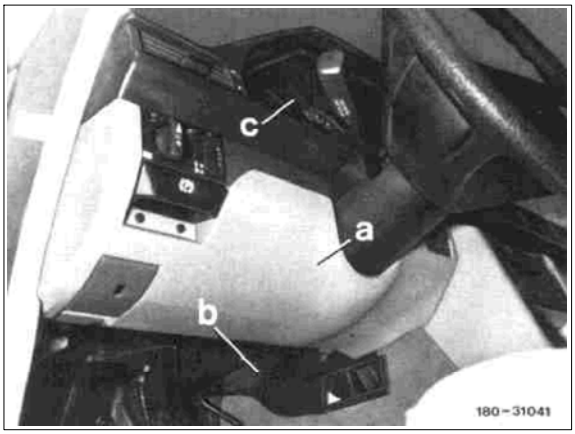

16 Mount holder to front wall pillar.

17 Fasten plug of rear auxiliary harness to holder by means of clips.

18 Press 4-pin plug of front auxiliary harness on plug.

1 Holder
X52 Plug connection trailer coupling (front/rear auxiliary harness)

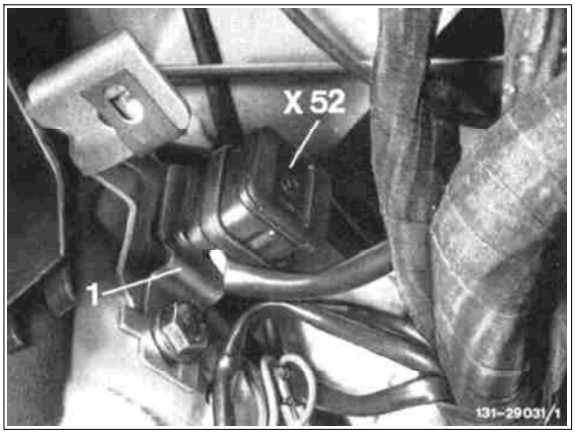

19 Remove cover from fuse and relay box.

20 Loosen fuse carrier.

21 Pull the three lines with the cable shoes from front auxiliary harness into fuse and relay box.

22 Connect lines according to identification, e.g. identification 8 on fuse 8 output (refer to wiring diagram page 26).

23 Fasten fuse carrier and close cover of fuse and relay box.

24 From auxiliary harness, install lacing with socket to cutout of instrument cluster and insert green bulb into socket.

25 Insert plug socket (arrow) into instrument cluster connection 2.

26 Install instrument cluster, while inserting socket with bulb into plug (arrow) for check lamp.

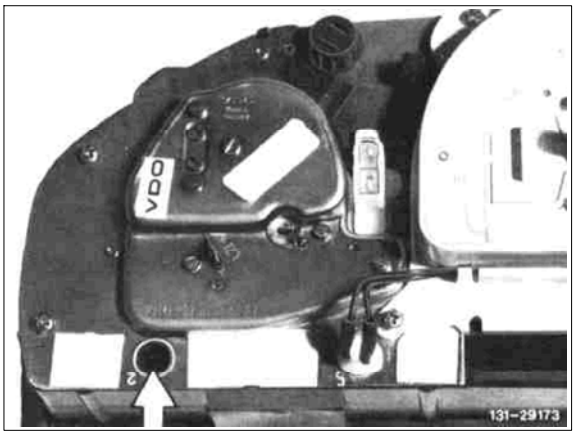

27 Mount intermediate plug of auxiliary harness between harness and stop lamp switch or on vehicles where intermediate contact has already been made to the stop lamp switch, disconnect harnesses and install new harness from stop lamp switch to fuse and relay box instead and fasten laterally with clips. Then connect all harnesses to multiple plug connection, stop lamp switch.

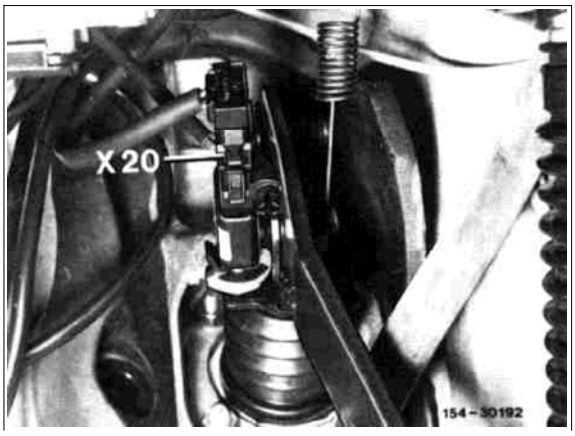

X20 Plug connection stop lamp switch

40 Harness
F1 Fuse and relay box
S9 Stop lamp switch
X21 Multiple plug connection stop lamp switch

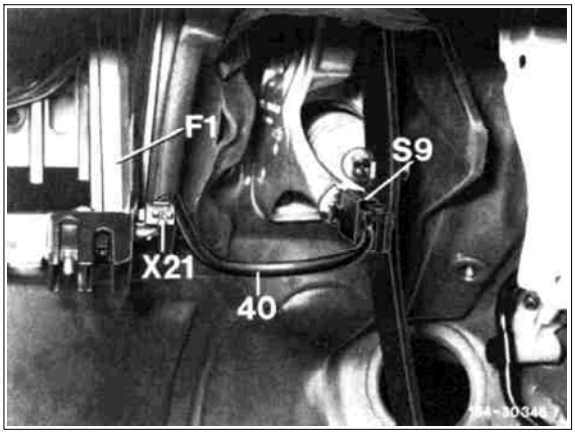

28 Install rear auxiliary harness from plug connection (52) along main harness up to spare wheel well. For this purpose, lift floor covering and insert auxiliary harness into cable duct.

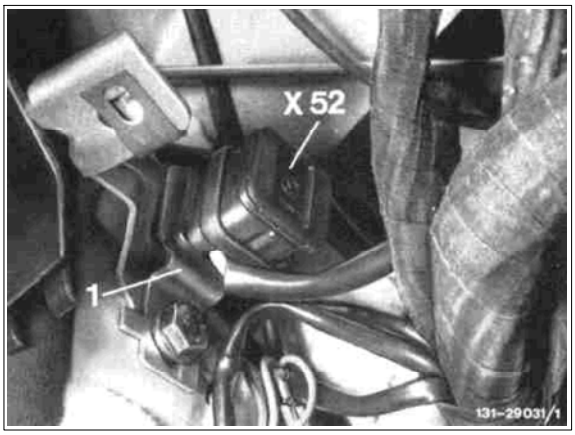

29 Screw control unit for trailer flasher to holder.

2 Holder
3 Screw B4.2 3 8.5
N28 Control unit for trailer flasher

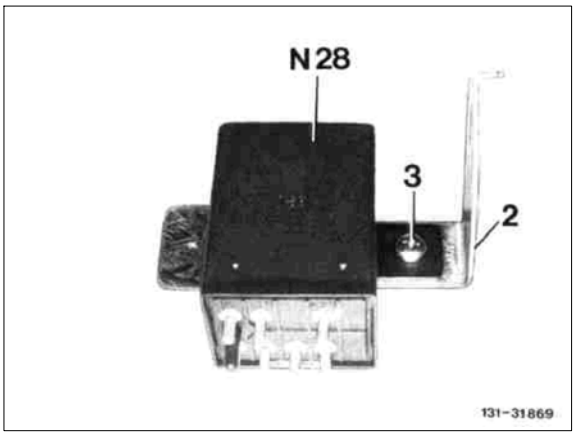

30 Screw trailer flasher (turn signal) control unit with holder to rear left hand side wall (arrow, screw M 6x20 and nut M6). On vehicles with sliding roof the holder is mounted between the sliding roof motor and the side wall.

2 Holder

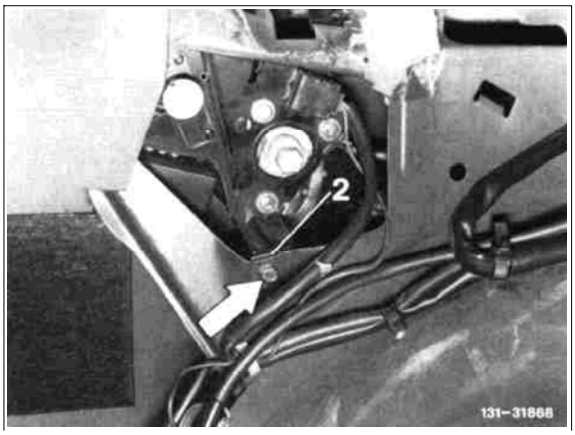

31 Plug 8-pin connector to control unit trailer flasher.

32 Connect ground line at ground point.

N28 Control unit for trailer flasher
W6 Ground, trunk Wheelhouse left.

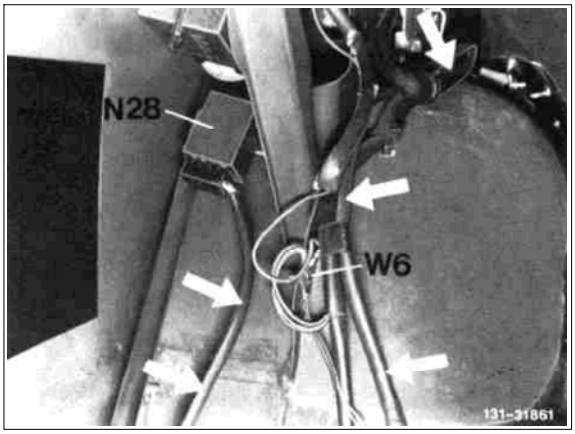

33 Install left hand intermediate plug of auxiliary harness for plug connection of left hand tail lamp unit and mount.

X57/1 Plug connection tail lamp left/trailer coupling

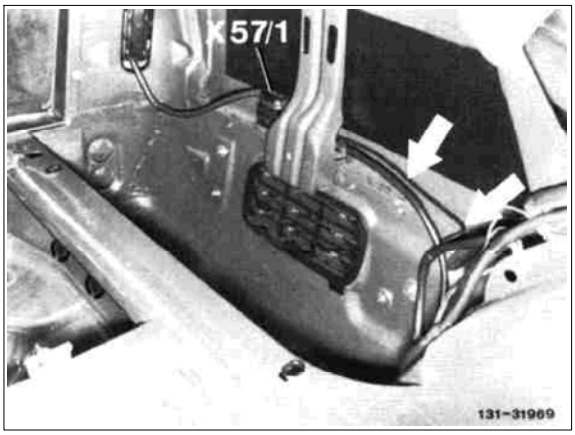

34 Remove intermediate plug for right hand tail lamp and pull auxiliary harness through reinforcement of side member into spare wheel well.

a Wheelhouse rear left.
b Reinforcement on side member

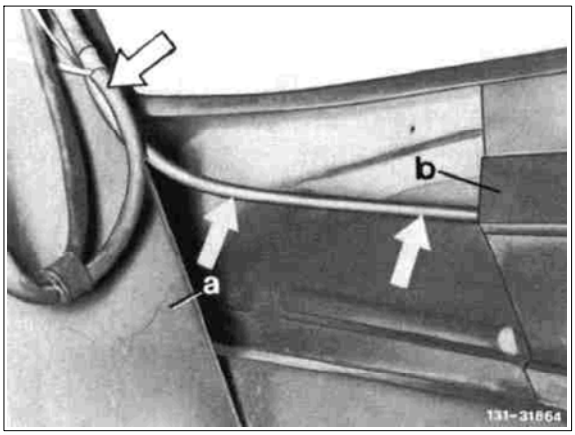

35 Pull auxiliary harness from spare wheel well through side member.

36 Remove rubber grommet in cargo floor and insert new rubber grommet. Then pull lacing for socket through rubber grommet.

6 Rubber grommet

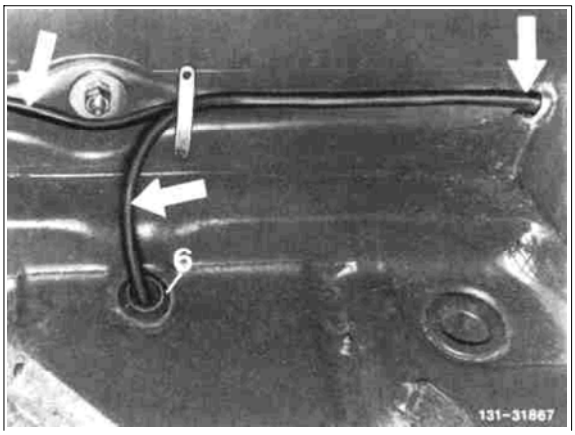

37 Install lacing (cable) for right hand tail lamp to right hand side member. If no cutout similar to left hand side is available, drill hole (14 mm dia.) into side member and insert rubber grommet. Pull auxiliary harness through grommet.

38 Fasten auxiliary harness to cross member.

7 Clamp
8 Rubber grommet
a Adhesive tape

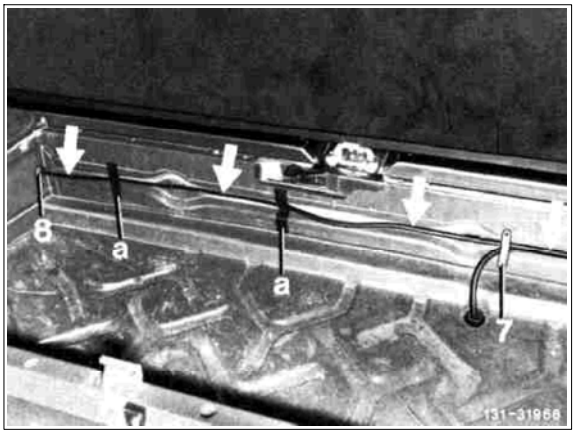

39 Pull auxiliary harness similar to left hand side through reinforcement of side member and install toward plug connection for right hand tail lamp.

40 Insert auxiliary harness and loose plug sockets again into intermediate plug (refer to wiring diagram page 26) and mount intermediate plug.

X57/2 Plug connection tail lamp right/trailer coupling

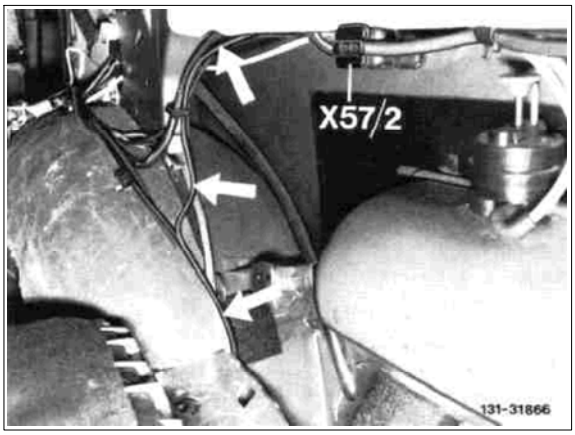

B. Installing electrical parts with 7-pin socket (without constant current line terminal 30), vehicles starting approx. 08/86

1 Disconnect ground line on battery.

2 Remove left hand front seat.

3 Remove rear seat cushion.

4 Remove left hand covers on front and rear entrance.

5 Remove lower lining on left hand center pillar.

6 Loosen belt end of front safety belt at the left.

7 Remove fastening clips of rear floor covering at the left.

8 Force off outer cover (a) at the left and unscrew hinge (b).

9 Remove spare wheel cover and spare wheel.

10 Remove lining of rear wheel housing at the left.

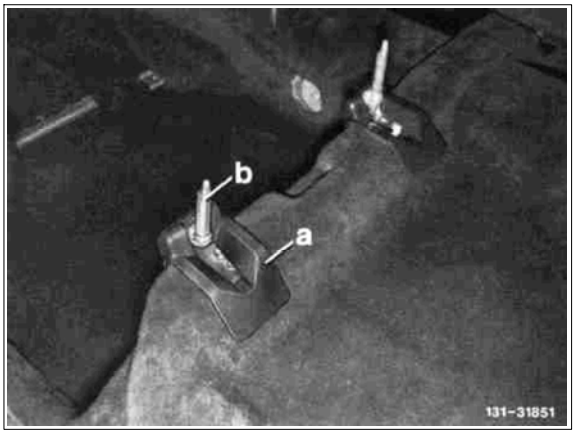

11 Raise load space floor (a) and cover (b) underneath, removing clips (c) for this purpose.

12 Open side wall flap at the right and remove fluid tank for rear wiper.

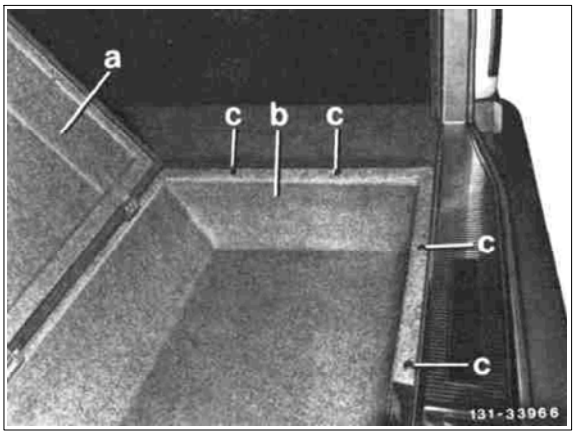

13 Remove covers (a and b) under instrument panel.

14 Remove lining of left hand front wall pillar.

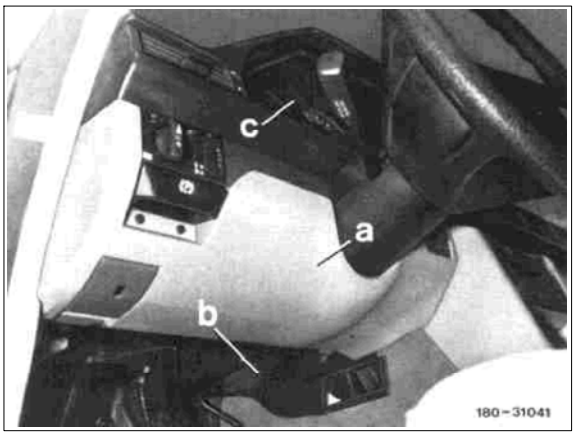

15 Mount holder on front wall pillar.

16 Clip plug of rear auxiliary harness to holder.

17 Press 4-pin connector of front auxiliary harness on plug.

1 Holder
X52 Plug connection trailer coupling (front/rear auxiliary harness)

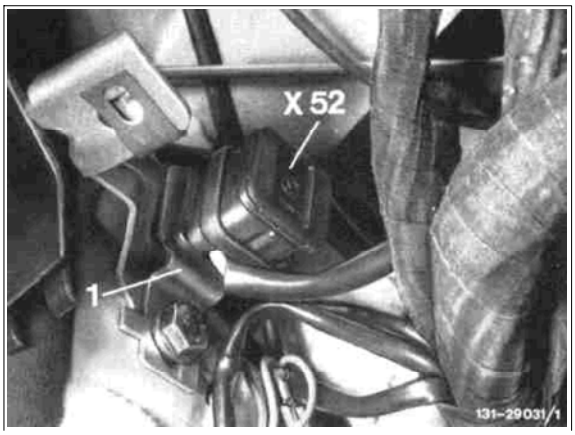

18 Remove cover from fuse and relay box.

19 Loosen fuse carrier.

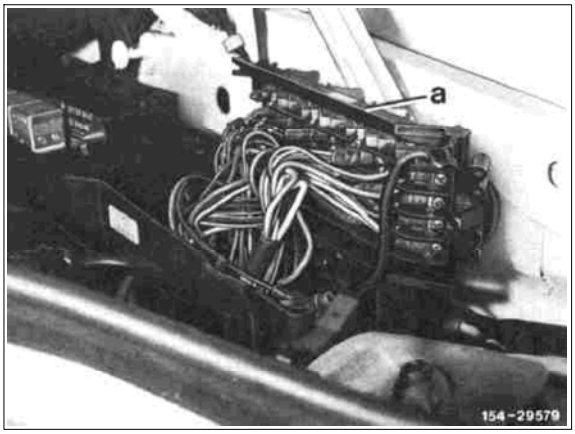

a Fuse carrier

20 Pull off combination relay (N10) and unclip relay holder.

21 Pull front auxiliary harness from footwell into fuse and relay box.

22 Insert plug socket of front auxiliary harness into available opening at bottom of connector (assignment 7) for combination relay (N10).

23 Fasten relay holder.

24 Plug on new combination relay (N10/2).

25 Connect lines with cable shoes according to identification, e.g. identification 8 on fuse 8 output (refer to wiring diagram page 27).

26 Fasten fuse carrier and close cover of fuse and relay box.

27 Mount intermediate plug of auxiliary harness between harness and stop lamp switch or on vehicles where intermediate contact has already been made to the stop lamp switch, disconnect harnesses and install new harness from stop lamp switch to fuse and relay box instead and fasten laterally with clips. Then connect all harnesses to multiple plug connection, stop lamp switch.

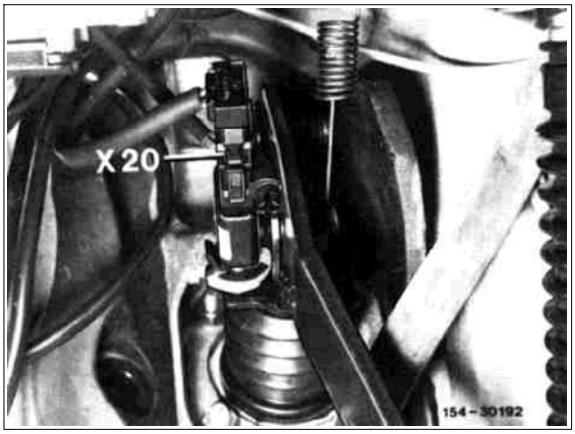

X20 Plug connection stop lamp switch

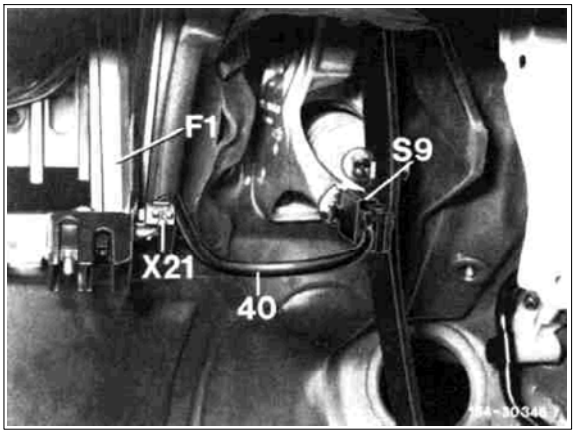

40 Harness
F1 Fuse and relay box
S9 Stop lamp switch
X21 Multiple plug connection stop lamp switch

28 Install rear auxiliary harness of plug connection (X52) along main harness up to spare wheel well. For this purpose, raise floor covering and insert auxiliary harness into cable duct.

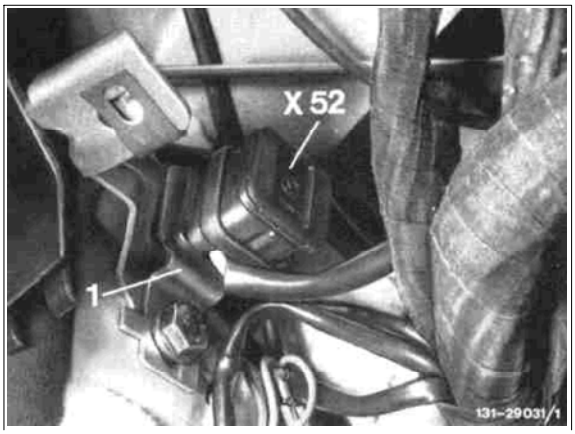

1 Holder
X52 Plug connection trailer coupling (front/rear auxiliary harness)

29 Plug 6-pin connector of rear auxiliary harness (arrow) on trailer monitoring control unit.

30 Place trailer monitoring control unit into foam cap, then close foam cap with rubber band.

2 Foam cap
N28/1 Trailer monitoring control unit

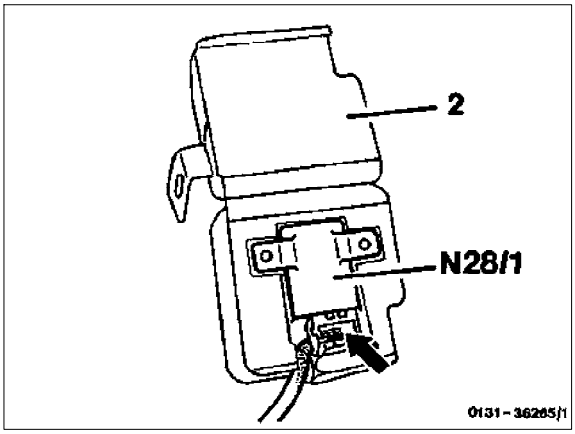

31 Screw foam cap to rear left hand side wall (arrow, screw M6 x 20 and nut M6). On vehicles with sliding roof mount holder between sliding roof motor and side wall.

2 Holder of foam cap

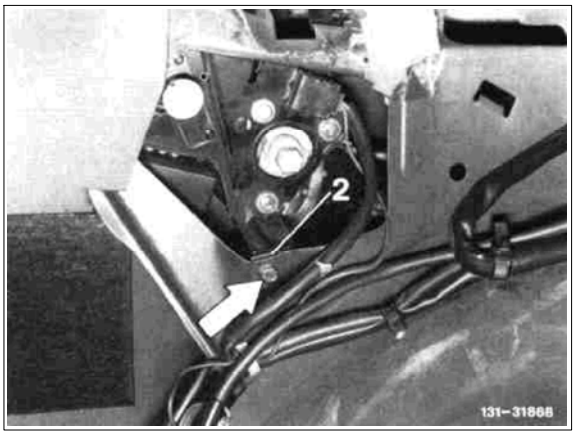

32 Connect ground line at ground point

2 Foam cap
3 Rubber band
W6 Ground, trunk wheelhouse, left

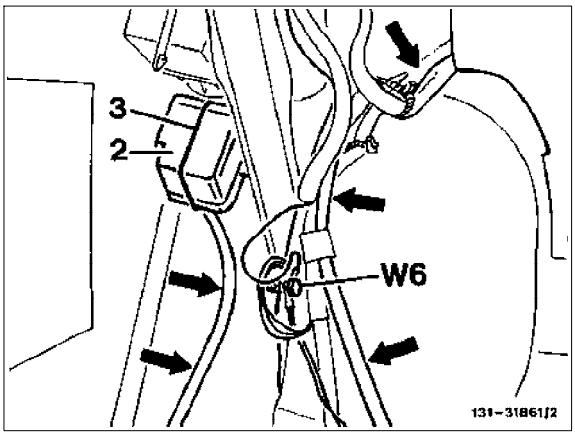

33 Install left hand intermediate plug of auxiliary harness to plug connection for left hand tail lamp and mount.

X57/1 Plug connection tail lamp left/trailer coupling

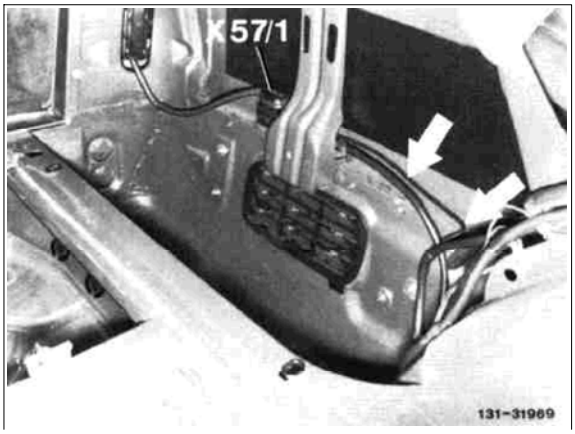

34 Remove intermediate plug for right hand tail lamp and pull auxiliary harness through reinforcement of side member into spare wheel well.

a Wheelhouse rear left
b Reinforcement on side member

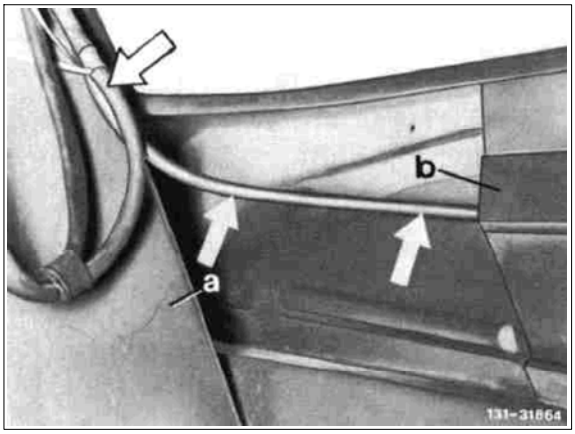

35 Pull auxiliary harness from spare wheel well through side member.

36 Remove rubber grommet in cargo floor and insert new rubber grommet. Then pull lacing for socket through rubber grommet.

6 Rubber grommet

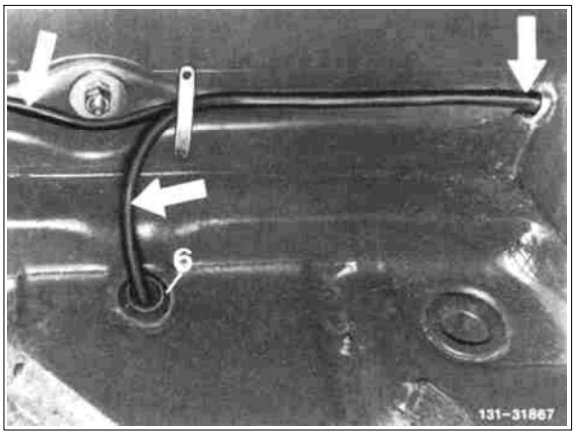

37 Install lacing for right hand tail lamp to right hand side member. If no cutout similar to left hand side is available, drill hole (14 mm dia.) into side member and insert rubber grommet. Pull auxiliary harness through grommet.

38 Fasten auxiliary harness to cross member.

7 Clamp
8 Rubber grommet
a Adhesive tape

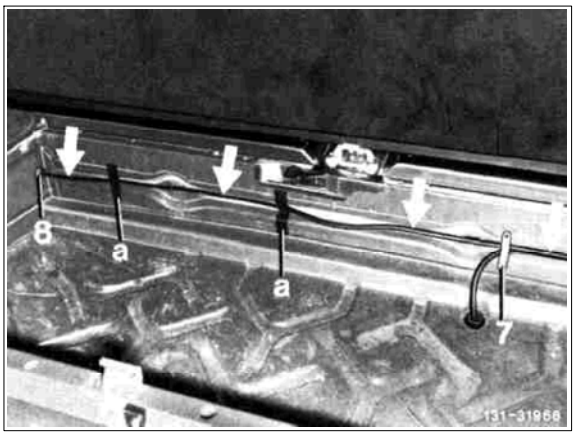

39 Pull auxiliary harness similar to left hand side through reinforcement of side member and install toward plug connection for right hand tail lamp.

40 Insert auxiliary harness and loose plug sockets again into intermediate plug (refer to wiring diagram page 27) and mount intermediate plug.

X57/2 Plug connection tail lamp right/ trailer coupling

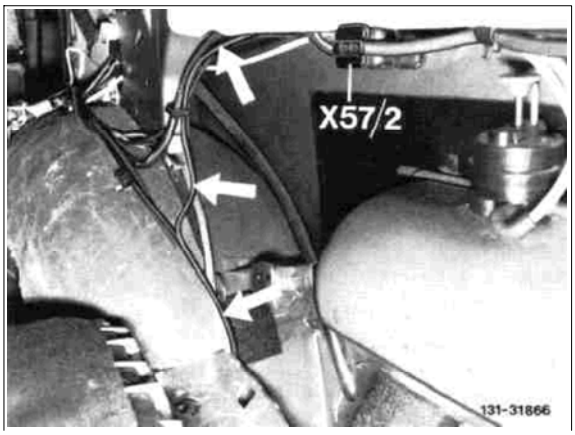

C. Installing electrical parts with 13-pin socket and constant current line terminal 30, all vehicles

1 Disconnect ground line on battery.

2 Remove left hand front seat.

3 Remove rear seat cushion.

4 Remove left hand covers on front and rear entrance.

5 Remove lower lining on left hand center pillar.

6 Loosen belt end of front safety belt at the left.

7 Remove fastening clips of rear floor covering at the left.

8 Force off outer cover (a) at the left and unscrew hinge (b).

9 Remove spare wheel cover and spare wheel.

10 Remove lining of rear wheel housing at the left.

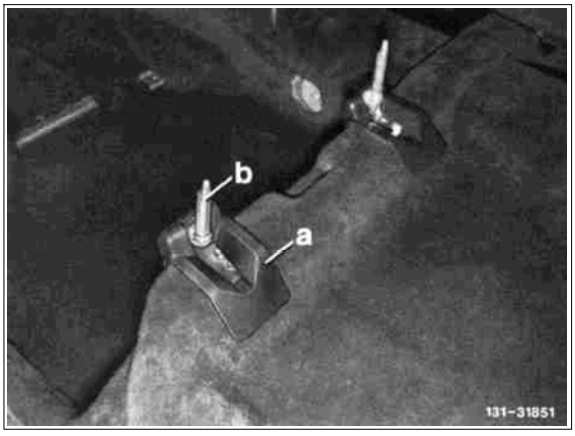

11 Raise cargo floor (a) and cover (b) underneath, removing clips (c) for this purpose.

12 Open side wall flap at the right and remove fluid tank for rear wiper.

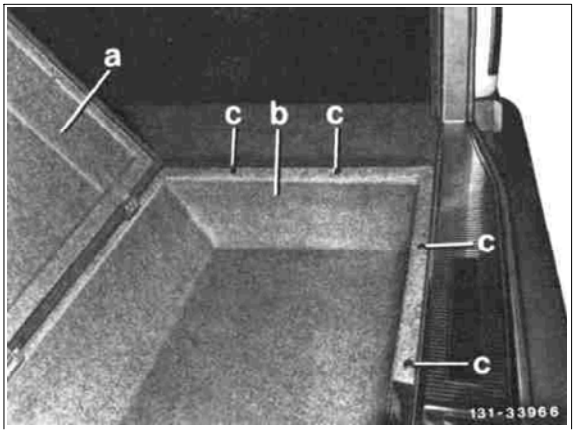

13 Remove covers (a and b) under instrument panel.

14 Remove lining of left hand front wall pillar.

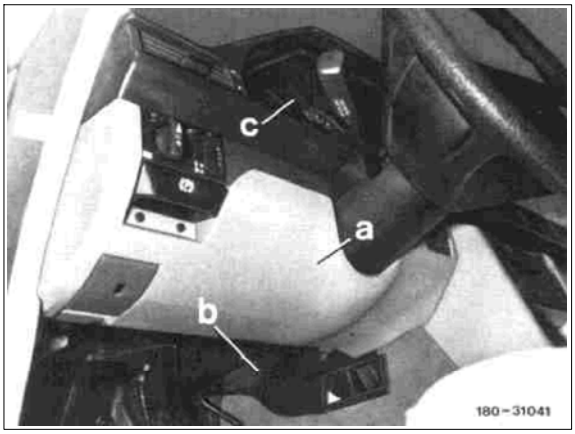

15 Mount holder on front wall pillar.

16 Clip plug of rear auxiliary harness of holder.

17 Press 6-pin connector of front auxiliary harness on plug.

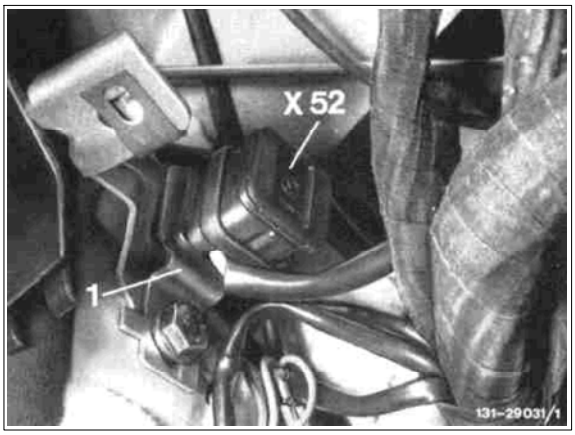

18 Connect red line to terminal block (X4) terminal 30.

19 Remove cover from fuse and relay box.

20 Loosen fuse carrier.

X4 Terminal block terminal 30, fuse and relay box

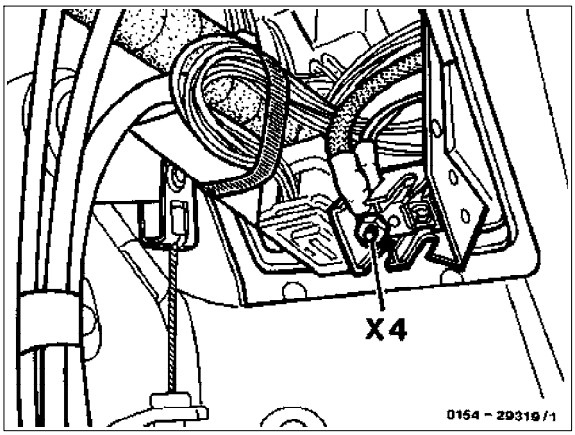

21 Pull off combination relay (N10) and unclip relay holder.

22 Pull front auxiliary harness from footwell into fuse and relay box.

23 Insert plug socket of front auxiliary harness into available opening at bottom of connector (connection 7) for combination relay (N10).

24 Install red and red/black line through fuse and relay box into unit comparment.

25 Insert jacks according to identification into connector and close connector.

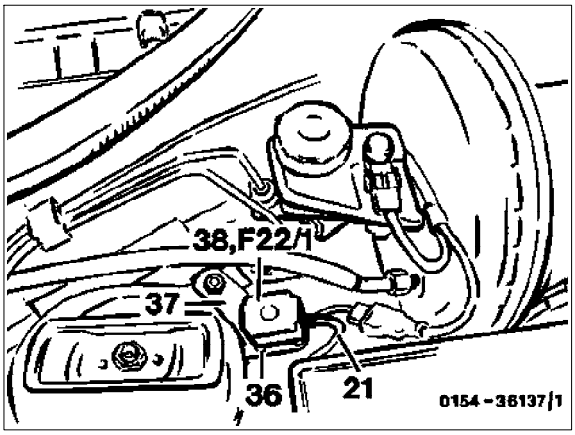

21 Front auxiliary harness
36 Connector
37 Holder
38 Cover
F22/1 Auxiliary fuse holder trailer coupling, seat heater

26 Mount holder with screw M8 x 12 and nut M8 on spring strut dome and fasten connector with clips.

27 Plug on auxiliary fuse holder (F22/1) and mount fuse element (16A).

28 Mount cover of auxiliary fuse holder.

29 Fasten relay holder.

30 Plug on new combination relay (N10/2).

31 Connect lines with cable shoes according to identification, e.g. identification 8 on fuse 8 output (refer to wiring diagram on page 28).

32 Fasten fuse carrier and close cover of fuse and relay box.

33 Mount intermediate plug of auxiliary harness between harness and stop lamp switch or on vehicles where intermediate contact has already been made to stop lamp switch, disconnect harnesses and install new harnesses from stop lamp switch to fuse and relay box instead and fasten laterally with clips. Then connect all harnesses to multiple plug connection, stop lamp switch.

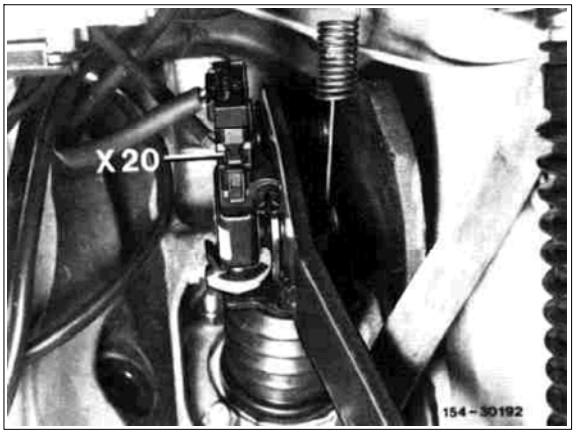

X20 Plug connection stop lamp switch

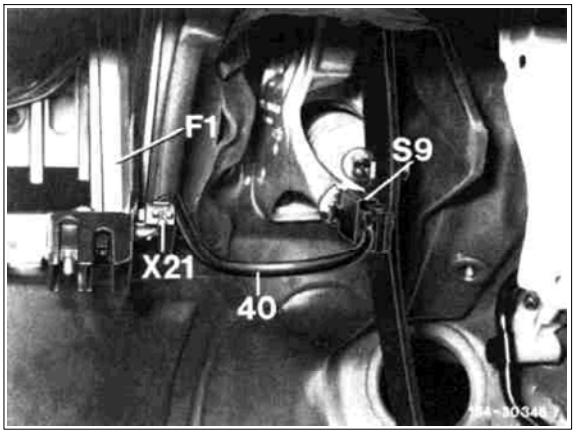

40 Harness
F1 Fuse and relay box
S9 Stop lamp switch
X21 Multiple plug connection stop lamp switch

34 Install rear auxiliary harness of plug connection (X52) along main harness up to spare wheel well. For this purpose, raise floor covering and insert auxiliary harness into cable duct.

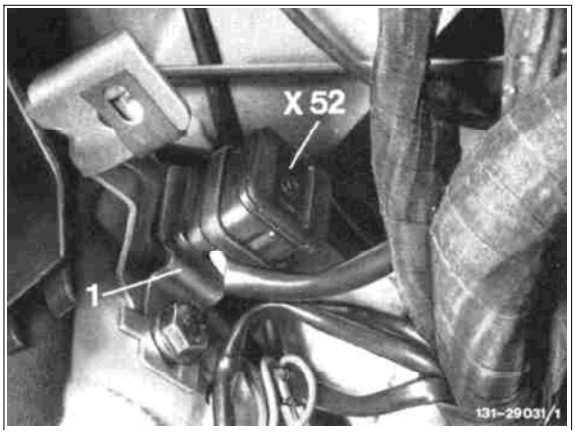

1 Holder
X52 Plug connection trailer coupling (front/rear auxiliary harness)

35 Attach 6-pin connector of rear auxiliary harness (arrow) to control unit trailer monitoring.

36 Place trailer monitoring control unit into foam cap, then close foam cap with rubber band.

2 Foam cap
N28/1 Trailer monitoring control unit

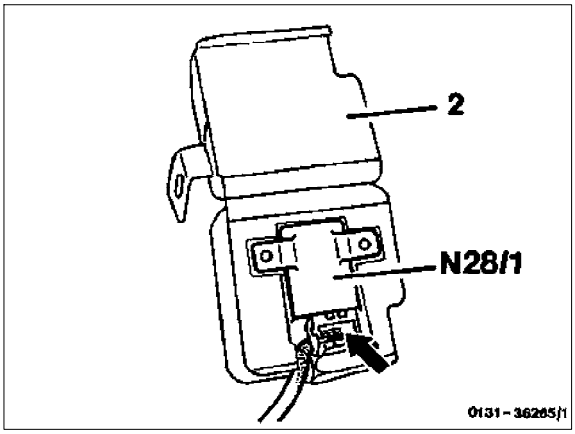

37 Screw foam cap to rear left hand side wall (arrow, screw M6 x 20 and nut M6). On vehicles with sliding roof, the holder is mounted between sliding roof motor and side wall.

2 Foam cap holder

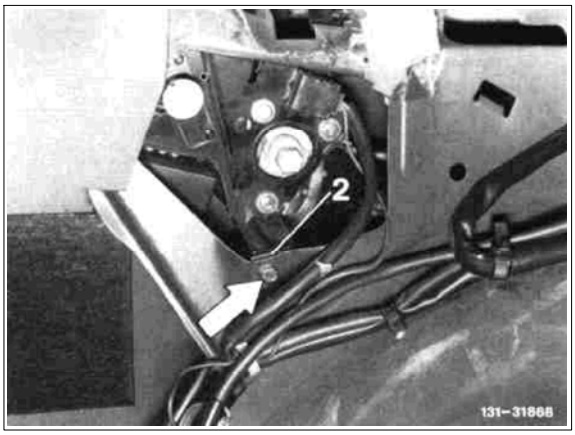

38 Connect ground line to ground.

2 Foam cap
3 Rubber band
W6 Ground in trunk, left rear wheelhouse

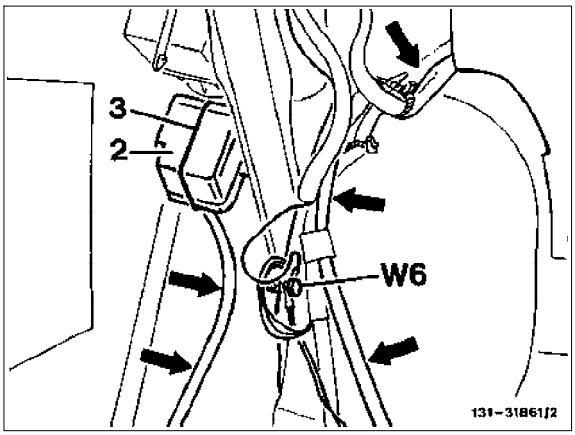

39 Install and mount left hand intermediate plug of auxiliary harness for plug connection of left hand tail lamp.

X57/1 Plug connection, left tail lamp/ trailer coupling

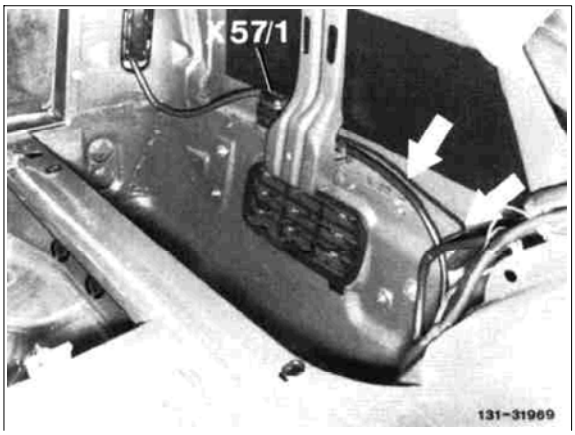

40 Remove intermediate plug for right hand tail lamp and pull auxiliary harness through reinforcement of side member into spare wheel well.

a Wheelhouse rear left
b Reinforcement on side member

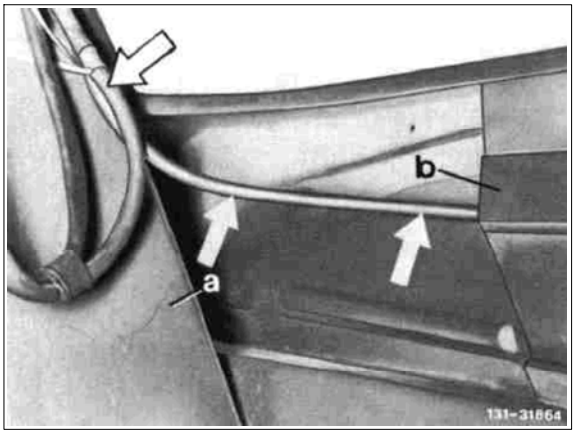

41 Pull auxiliary harness from spare part well through side member.

42 Remove rubber grommet in cargo floor and insert new rubber grommet. Then pull lacing for socket through rubber grommet.

6 Rubber grommet

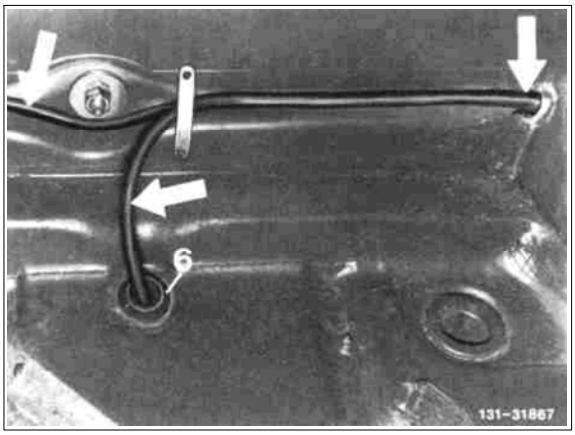

43 Install lacing for right hand tail lamp toward right hand side member. If there is no break-through such as at the left, drill hole (14 mm dia.) into side member and insert rubber grommet. Pull auxiliary harness through hole.

44 Fasten auxiliary harness on cross member.

7 Clamp
8 Rubber grommet
a Adhesive tape

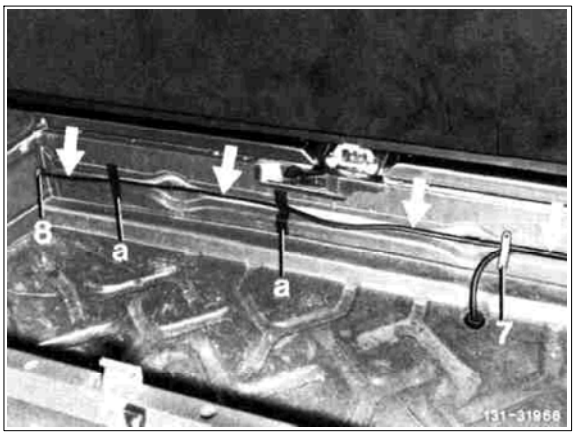

45 Pull auxiliary harness through reinforcement of side member as at left and install toward plug connection for right hand tail lamp.

46 Reinsert auxiliary harness and loose jacks into intermediate plug (refer to wiring diagram page 28) and mount intermediate plug.

X57/2 Plug connection, right tail lamp trailer coupling

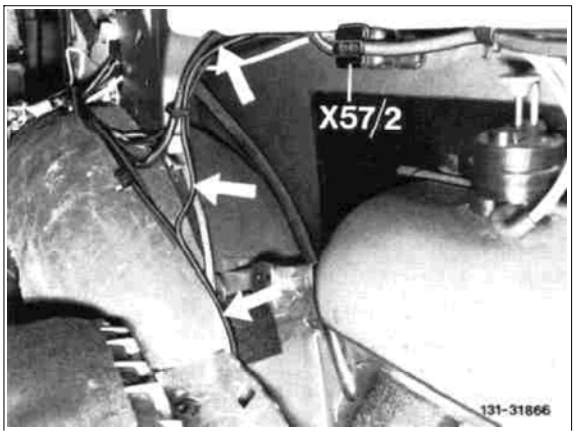

D. Installing trailer coupling

1 Remove rear bumper.

2 Remove rear part of exhaust system as from flange connection (arrow).

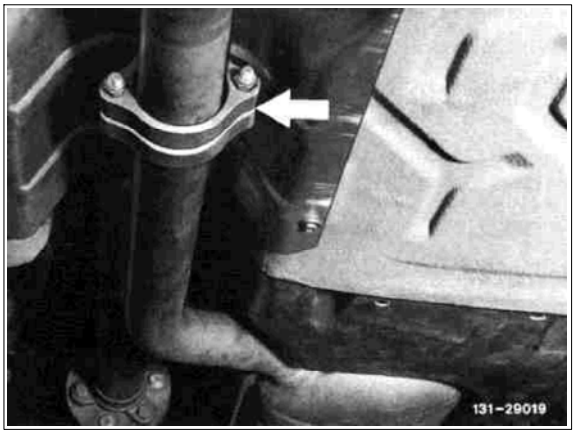

3 Remove underfloor protection on rear cross member of rear center piece in marked range of underfloor protection.

Note:
On vehicles as of approx. 02/87 the four bores for cross member of trailer coupling are marked in indicated range by 4 mm dia. holes in cover panel.

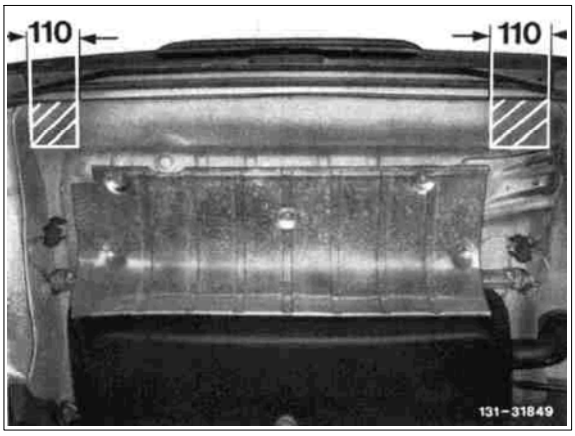

4 On vehicles up to approx. 01/87 position cross member of trailer coupling on rear center piece below and align. Mark the four fastening holes (arrows).

5 Remove cross member.

6 Drill fastening holes (18 mm dia.).

7 Paint bright body parts with zinc dust paint.

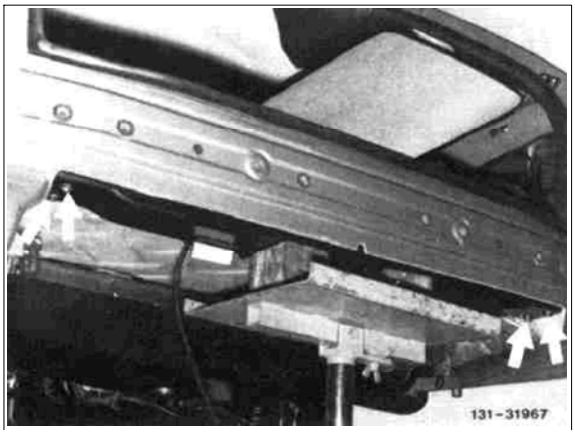

8 On trailer couplings with rigid ball neck, screw ball neck to cross member.

9 Tighten screws for ball neck to 85 Nm.

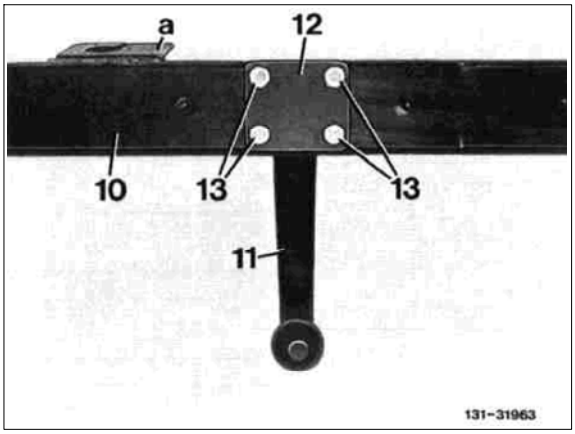

10 Cross member
11 Ball neck
12 Plate
13 Screws M12 3 60 (micro-encapsulated)
a Holder for socket

10 Remove plugs (arrows) from fastening holes in vehicle side members.

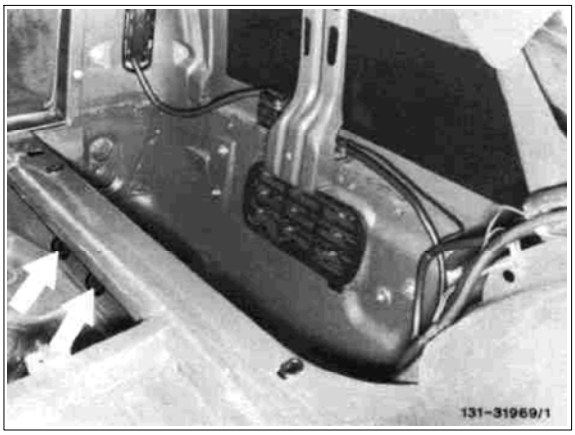

11 Insert stiffening members, identified with an L or R, in the left hand or right hand vehicle side member and screw down in such a manner that the stiffening members can still be moved.

Layout stiffening member left, mirror image at the right

14 Stiffening member
15 Washer A 10.5 (4 mm thick)
16 Nut M10 (self-locking)
a Rear center piece

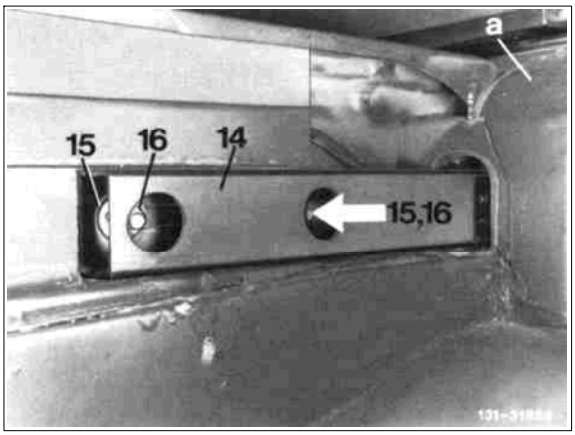

Layout fastening screws left, mirror image at the right

15 Washer A 10.5 (4 mm thick)
17 Screws M10 3 30

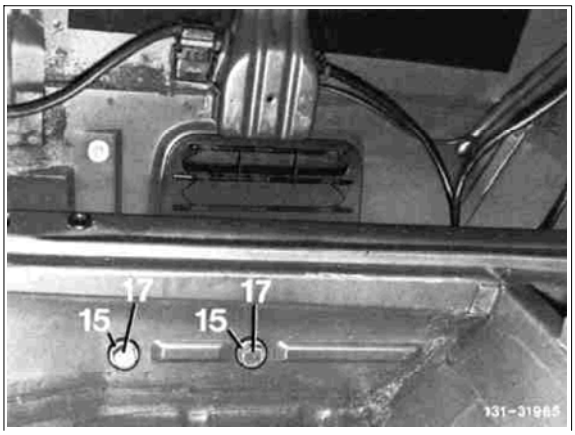

12 Center bores of stiffening members and body from below by means of a screwdriver. Then screw cross member of trailer coupling to stiffening members.

13 Tighten screws without collar to 85 Nm or screws with collar to 110 Nm.

10 Cross member
18 Screw M12 3 1.5 3 70 (micro-encapsulated)

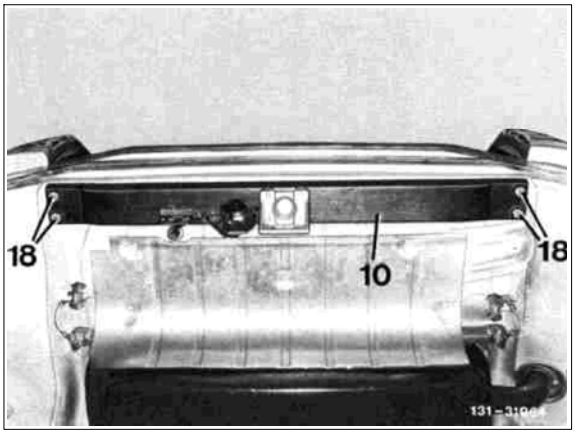

14 Tighten self-locking nuts of screw connection stiffening member/body left and right in rear passenger compartment to 43 Nm.

14 Stiffening member
15 Washer A 10.5 (4 mm thick)
16 Nut M10 (self-locking)
a Rear center piece

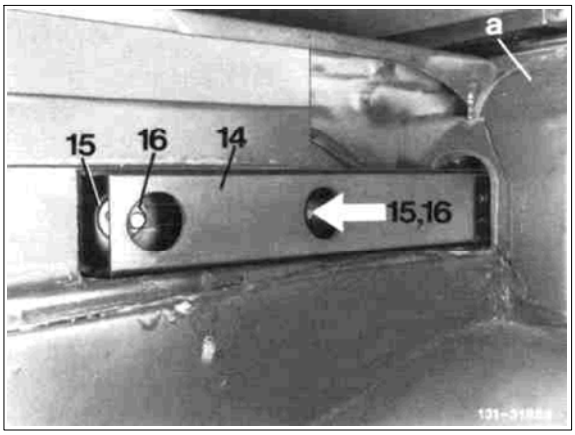

15 Fasten auxiliary harness to cross member.

16 Pull rubber grommet on auxiliary harness.

20 Cable strap
21 Rubber grommet
X58 Socket without housing

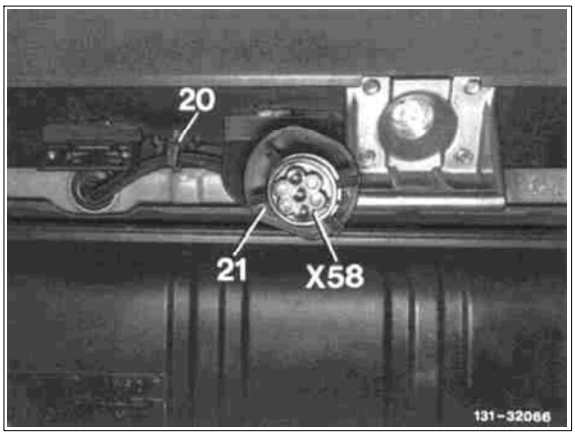

17 Connect auxiliary harness to socket as follows:

Connection 7-pin socket

Terminal	Line
58 L	gray
58 R	gray/red
54	black/red
54 g	gray/green 1) (fog tail lamp)
L	black/white
R	black/green
31	brown

1) Connect only if the trailer has a fog tail lamp. Otherwise, insulate line and lace back.

Connection 13-pin socket

Terminal	Line	mm2
1	black/white	0.75
2	gray/green	0.75
3	brown	0.75
4	black/green	0.75
5	gray/red	0.75
6	black/red	0.75
7	gray	0.75
9	red/black	2.5
13	brown	2.5

18 Screw socket to holder.

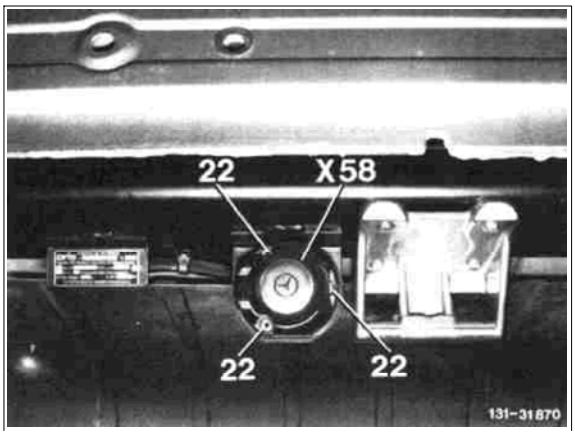

22 Screw B4.8 3 32
X58 Socket

19 Glue label (arrow) on loading edge.

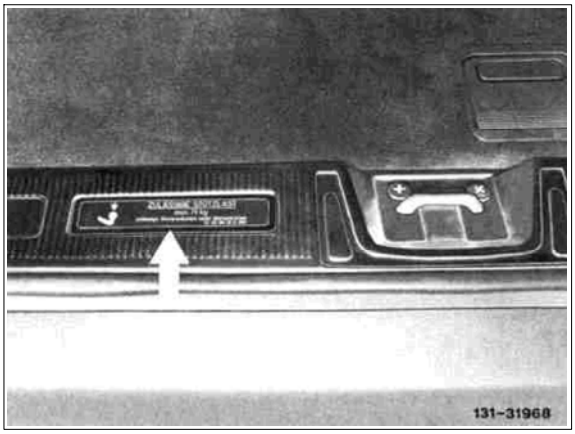

20 Glue label (arrow) to rear wall door.

21 Reinstall or fasten all removed parts.

22 Connect ground line to battery.

23 Test electrical system for function.

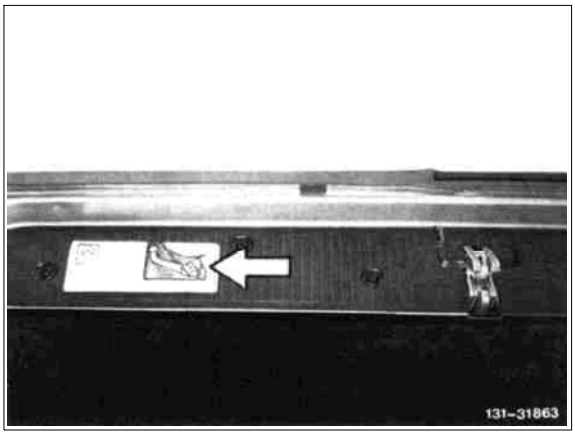

24 With removable ball neck, press covering cap (arrow) on ball neck mount and place pocket with ball neck into vehicle.

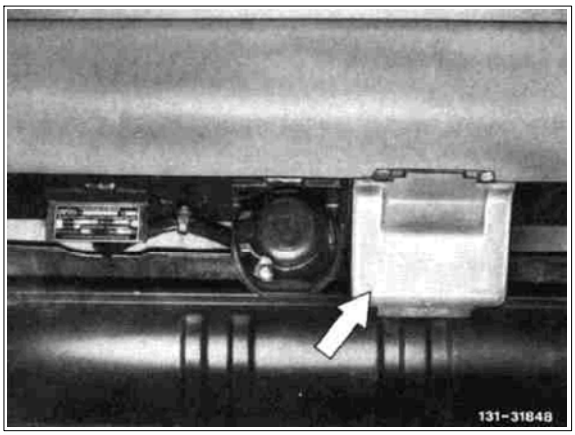

25 On model 124.190 with air-conditioner or temperature control the front section of the noise capsule or the underfloor protection must be replaced with a version with ventilation slits (arrows).

a Noise capsule, front section with ventilation slits

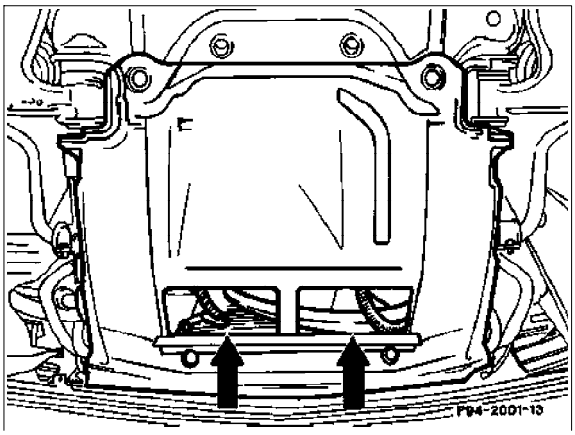

b Underfloor protection with ventilation slits

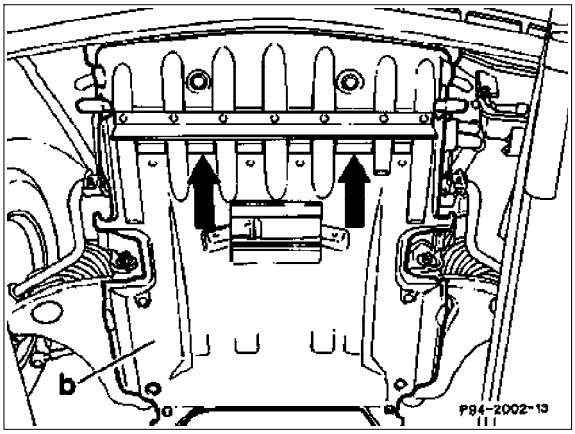

E. Wiring diagrams

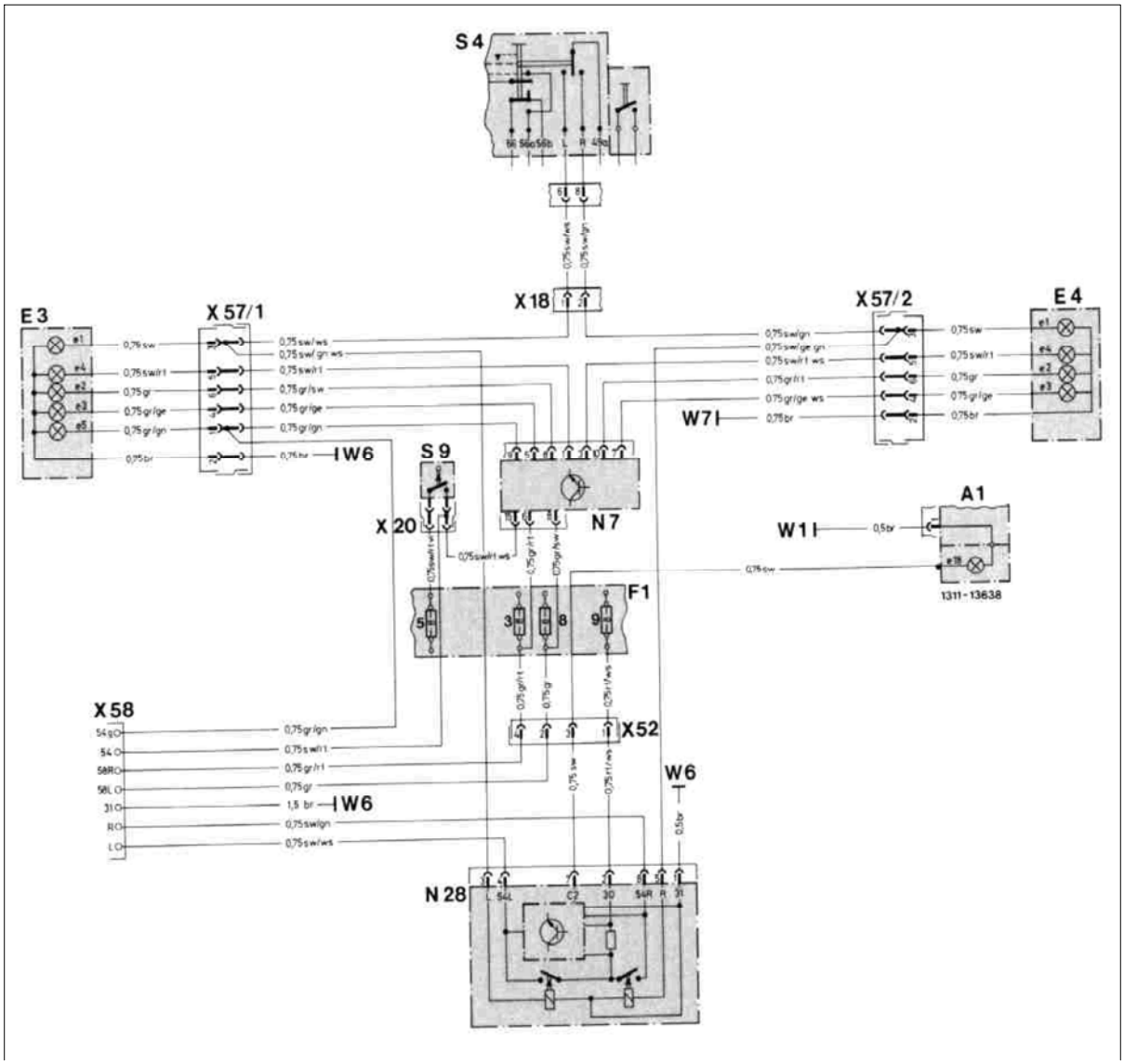

Wiring diagram with 7-pin socket for vehicles up to approx. 07/86 without constant current line terminal 3

A1	Instrument cluster
A1e18	Checkup, trailer ccoupling
E3	Tail lamp unit left
E3e1	Flasher
E3e2	Tail lamp/parking lamp
E3e3	Back-up lamp
E3e4	Stop lamp
E3e5	Fog tail lamp
E4	Tail lamp unit right
E4e1	Flasher
E4e2	Tail lamp/parking lamp
E4e3	Back-up lamp
E4e4	Stop lamp
F1	Fuse and relay box
F1-3	Fuse 3, terminal 58 R
F1-5	Fuse 5, terminal 15
F1-8	Fuse 8, terminal 58 L
F1-9	Fuse 9, terminal 30

Continued on next page

Continued from previous page

N7	Lamp monitoring unit
N28	Control unit trailer flasher
S4	Combination switch
S9	Stop lamp switch
W1	Main ground (behind instrument cluster)
W6	Ground, trunk wheelhouse left
W7	Ground, trunk wheelhouse right
X18	Plug connection tail lamp harness
X20	Plug connection stop lamp switch
X52	Plug connection trailer coupling
X57/1	Plug connection tail lamp unit left/ trailer coupling
X57/2	Plug connection tail lamp unit right/ trailer coupling
X58	Socket trailer coupling (connect terminal 54 g only if trailer has a fog tail lamp)

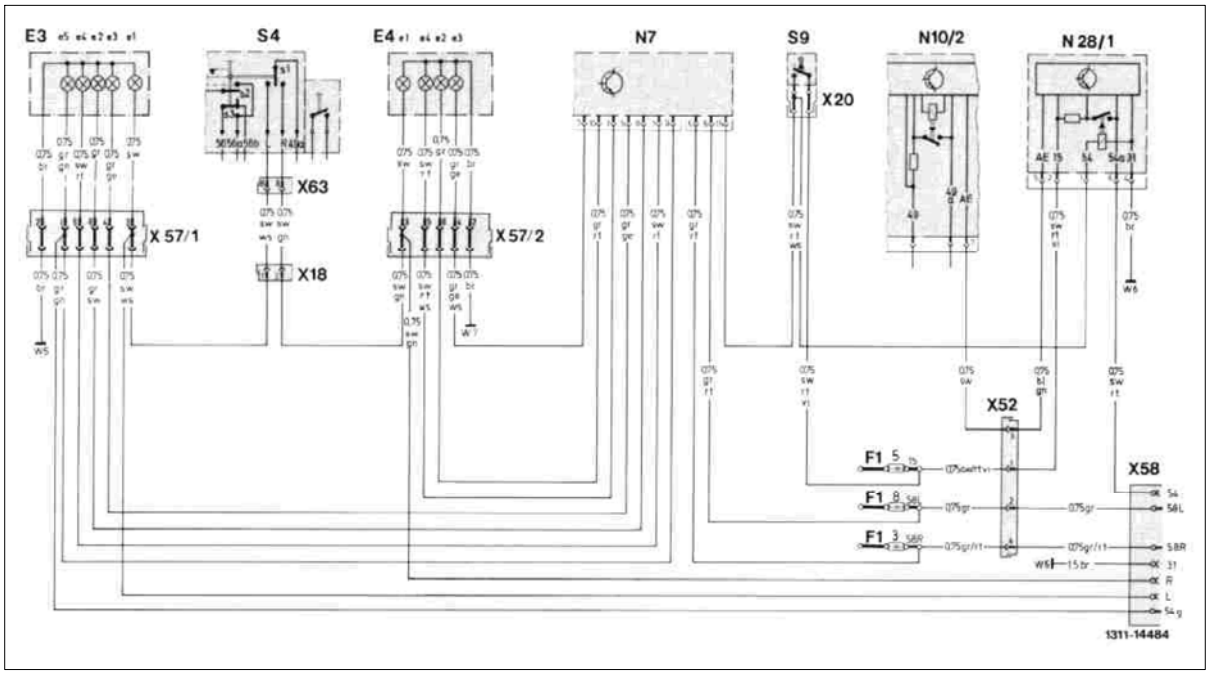

Wiring diagram with 7-pin socket for vehicles starting approx. 08/86 without constant current line terminal 30

E3	Tail lamp unit, left
E3e1	Flasher (turn signal)
E3e2	Tail lamp unit /parking lamp
E3e3	Back-up lamp
E3e4	Stop lamp
E3e5	Fog tail lamp
E4	Tail lamp unit, right
E4e1	Flasher (turn signal)
E4e2	Tail lamp unit /parking lamp
E4e3	Back-up lamp
E4e4	Stop lamp
F1	Fuse and relay box
F1-3	Fuse 3, terminal 58 R
F1-5	Fuse 5, terminal 15
F1-8	Fuse 8, terminal 58 L
N7	Lamp checkup unit
N10/2	Combination relay (flasher (turn signal) with trailer checkup, heatable rear window, wiper motor)
N28/1	Trailer monitoring control unit
S4	Combination switch
S9	Stop lamp switch
W6	Ground, trunk wheelhouse left
W7	Ground, trunk wheelhouse right
X18	Plug connection tail lamp harness
X20	Plug connection stop lamp switch
X52	Plug connection trailer coupling
X57/1	Plug connection tail lamp unit left/ trailer coupling
X57/2	Plug connection tail lamp unit right/ trailer coupling
X58	Socket trailer coupling (connect terminal 54 g only if trailer has a fog tail lamp)
X63	Plug connection steering harness

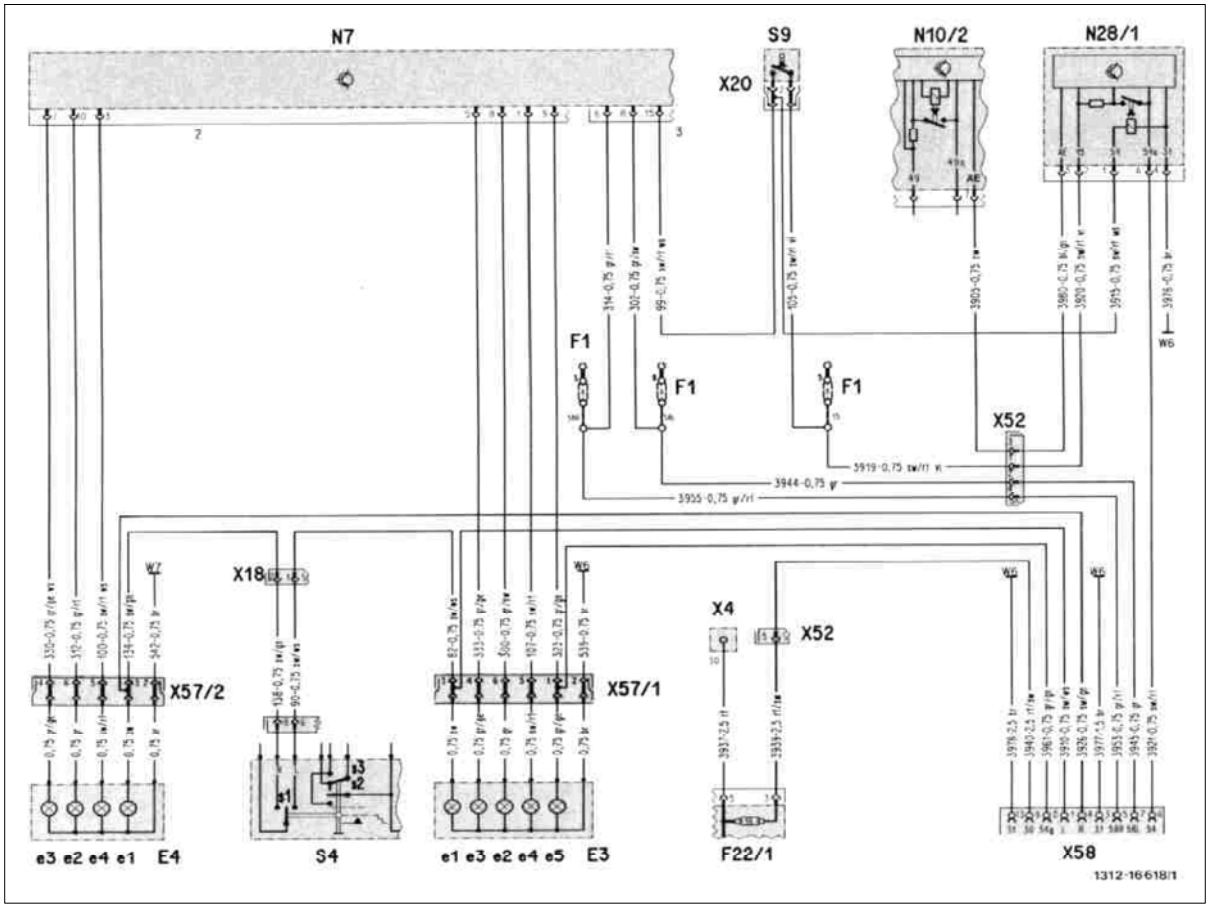

Wiring diagram with 13-pin socket for all vehicles with constant current line terminal 30

E3	Tail lamp unit, left	N10/2	Combination relay (flasher with trailer checkup, heatable rear window, wiper motor)
E3e1	Flasher		
E3e2	Tail lamp/parking lamp	N28/1	Trailer monitoring control unit
E3e3	Back-up lamp	S4	Combination switch
E3e4	Stop lamp	S9	Stop lamp switch
E3e5	fog tail lamp	W6	Ground, trunk wheelhouse left
E4	Tail lamp unit, right	W7	Ground, trunk wheelhouse right
E4e1	Flasher	X4	Line connector terminal 30, fuse and relay box/ passenger compartment 2-pole
E4e2	Tail lamp/parking lamp		
E4e3	Back-up lamp	X18	Plug connection tail lamp harness
E4e4	Stop lamp	X20	Plug connection stop lamp switch
F1	Fuse and relay box	X52	Plug connection trailer coupling
F1-3	Fuse 3, terminal 58 R	X57/1	Plug connection tail lamp unit left/ trailer coupling
F1-5	Fuse 5, terminal 15		
F1-8	Fuse 8, terminal 58 L	X57/2	Plug connection tail lamp unit right/ trailer coupling
F22/1	Auxiliary fuse holder, trailer coupling, seat heater		
		X58	Socket trailer coupling
N7	Lamp monitoring unit		

F. Parts ordering note

Parts required for installation are shown in the following spare parts data:

Designation	Parts Group or SA
Scope of delivery for trailer coupling, mechanical Scope of delivery for ball head (with removable ball neck only) Scope of delivery for trailer coupling, electrical1) Adapter for 13-pole trailer socket - 7-pole trailer plug2)	SA 11.329
Noise capsule, front section3)	52
Underfloor protection4)	SA 11.373

1) Optionally with 7-pin socket without constant current wire or 13-pin socket and constant current wire
2) Customer request only
3) Only for models 124.190 with air-conditioner or temperature control (without underfloor protection)
4) Only for models 124.190 with air-conditioner or temperature control (with underfloor protection)

Модель / Системы / Узел: 31 HITCHING MECHANISM
Модель=124185 Каталог=506 Система: 31 HITCHING MECHANISM
Иллюстрация: 540 Узел: ELECTRICAL PARTS USED FOR TRAILER COUPLING

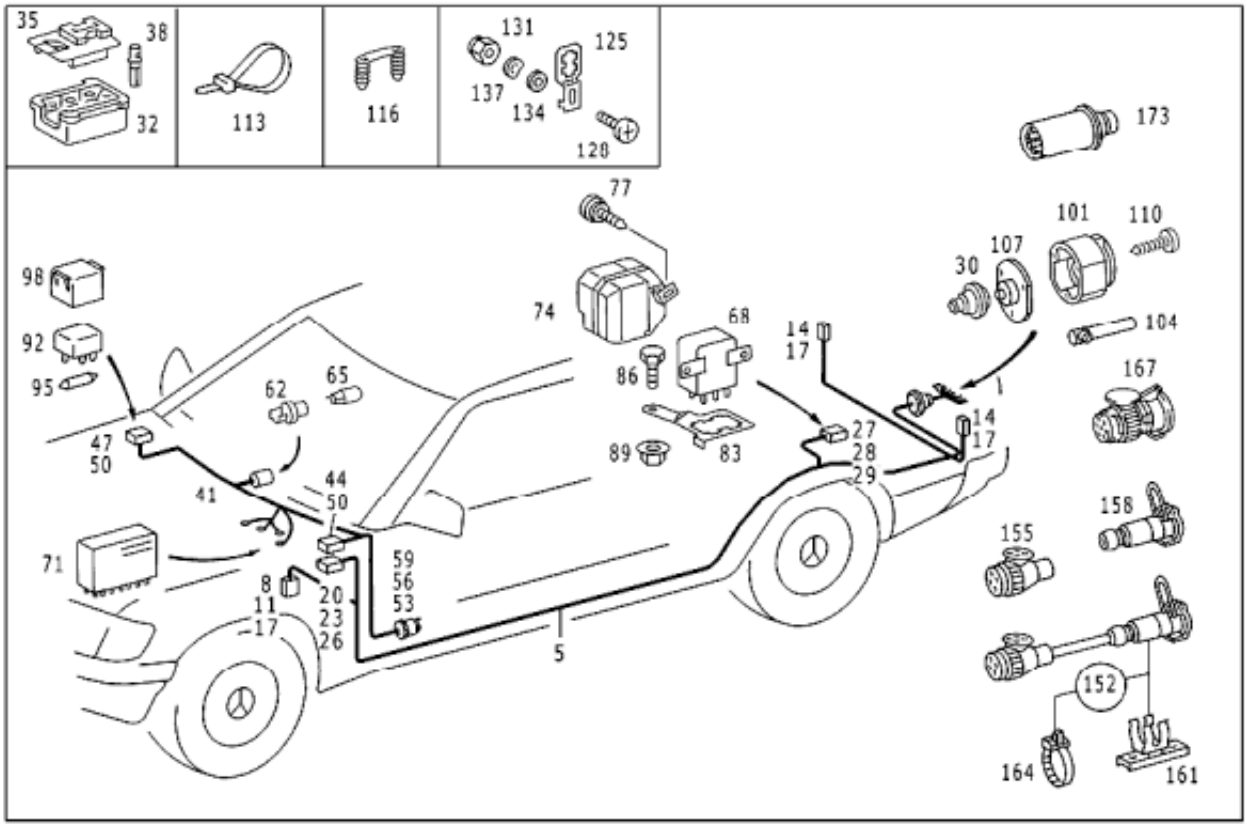

№	Код	Замена	К-во	Вар-т	Название	Информация	Примечания
005	1245407808		001	L	CABLE HARNESS	REAR LEFT AND RIGHT	*005
005	1245402910		001	L	CABLE HARNESS	REAR LEFT AND RIGHT	*006 *012
005	A1245400935	1245430627	-	L	ELECTRIC CABLE		
005	1245430627		001	L	CABLE HARNESS	REAR LEFT AND RIGHT	*013
005	1245407908		001	R	CABLE HARNESS	REAR LEFT AND RIGHT	*005
005	1245408710		001	R	CABLE HARNESS	REAR LEFT AND RIGHT	*006 *011
005	1245401035		001	R	ELECTRIC CABLE	REAR LEFT AND RIGHT	*013
008	0135458928		001		PLUG ADAPTER		
011	0145450428		001		PLUG ADAPTER		TO 013 545 89 28

014	0125454628		002		PLUG ADAPTER		
017	0105455228		006		PIN BUSHING		
020	0095455228		001		PLUG HOUSING		
023	0095452128		001		COVER		
026	0015453826		004		PLUG PIN		
027	0095451628		001		PIN BUSHING HOUSING		
028	0095451728		001		COVER		
029	0025459926		NB		ROUND PIN BUSHING		
030	2012950383		001		BOOT		
032	0065458028		001	L	PIN BUSHING HOUSING		
035	0095453028		001	L	COVER		
038	0035452626		002	L	ROUND PIN BUSHING		
041	1245403809		001		CABLE HARNESS	BLINKER CONTROL	*005
041	1245409208		001		CABLE HARNESS	BLINKER CONTROL	*006 *012
041	A1245400235	1245406535	-	L	ELECTRIC CABLE		
041	1245406535		001	L	ELECTRIC CABLE	BLINKER CONTROL	*013
041	A1245400335	1245406735	-	R	ELECTRIC CABLE		
041	1245406735		001	R	ELECTRIC CABLE	BLINKER CONTROL	*013
044	A0075450028	0155454928	-		PIN BUSHING HOUSING		
044	0155454928		001		PLUG		
044	0115455028		001		PIN BUSHING HOUSING		
047	1265450128		001	R	PIN BUSHING HOUSING		
050	0035452626		004		ROUND PIN BUSHING		
053	0085452028		001		PIN BUSHING HOUSING		
056	0095451428		001		COVER		
059	0015454426		001		ROUND PIN BUSHING		4MM
062	0005453219		001		SOCKET		
065	2015440094		001		BULB	GREEN GLASS BULB	
065	072601012230		001		BULB	CLEAR GLASS BULB	W5/1,2-12V

							1,2W
068	2018200005		001		BLINKER UNIT	TRAILER BLINKER CONTROL	*005
068	2018200205		001		BLINKER UNIT	TRAILER BLINKER CONTROL	*006
071	2018210247		001		RELAY	(TIME RELAY)	
074	1248200549		001		CAP	BLINKER SENDER UNIT	
077	N007981004243	000000002062	-		SHEET METAL SCREW		
077	000000002062		001		SCREW	BLINKER SENDER UNIT TO BRACKET	
077	000125004319		001		WASHER	BLINKER SENDER UNIT TO BRACKET	
083	1245455840		001	L	BRACKET		
086	304017008039		001		SCREW	BRACKET TO SPRING DOME	
089	913013008000		001		NUT	BRACKET TO SPRING DOME	
092	2015400350		001		FUSE BOX	BIPOLAR	
095	0015457534		001		FUSE		
098	1235450446		001	L	COVERING		
101	0025450826		001		PLUG SOCKET	7-POLE	
101	A0005402224	0005406481	-		CASE		
101	A0005404781	0005406481	-		PLUG SOCKET		
101	0005406481		001		PLUG SOCKET	13-POLE	
104	0035454126		009		CONTACT BUSHING	LONG VERSION; SCREW-TYPE	
104	0035454226		004		CONTACT BUSHING	SHORT VERSION; SCREWABLE	
104	0045455126		013		CONTACT BUSHING	CAPABLE OF BEING SOLDERED	
107	A1249972381	0005455480	-		GROMMET		
107	0005455480		001		GASKET	PLUG SOCKET TO BRACKET	
110	007981004357		003		SHEET METAL SCREW	PLUG SOCKET TO BRACKET	
113	0039977090		002		LOOM TIE	PLUG-SOCKET CABLE TO FRAME	
116	0049885778		001		CLIP	PLUG-SOCKET CABLE TO FRAME	
125	1245451240		001		BRACKET	BRACKET TO INSTRUMENT PANEL	
125	1245455940		001		BRACKET		*013
128	007985005127		001		SCREW	BRACKET TO WHEELHOUSE	

131	000137005203		001		SPRING WASHER	BRACKET TO WHEELHOUSE	
134	000125005312		001		WASHER	BRACKET TO WHEELHOUSE	
137	913017005000		001		NUT	BRACKET TO WHEELHOUSE	
152	A0005462603	1245409035	-		ELECTRIC CABLE		
152	1245409035		001		ELECTRIC CABLE		
155	0255451728		001		PLUG	13-POLE	
158	0015401381		001		PLUG SOCKET	7-POLE	
161	0005452840		001		BRACKET		
164	0019974390		002		LOOM TIE		
167	0005401074		001		CONNECTOR	ADAPTER FROM 13-PIN TO 7-PIN	
173	072577007200		001		PLUG	7-POLE	

*005 UP TO IDENT NO.: F 018412
*006 FROM IDENT NO.: F 018413
*011 ONLY APPLICABLE TO 193,393 WITH AIR CONDITIONER AND TRAILED LOAD EXCEEDING 1500 KG
*012 FOR USE WITH 7-POLE TRAILER PLUG SOCKET
UP TO IDENT NO.: F 084207
*013 FOR USE WITH 13-POLE TRAILER PLUG SOCKET
FROM IDENT NO.: F 084208

Level control, ADS, ASD, 4MATIC, fluid level

3211

All models

Special tools

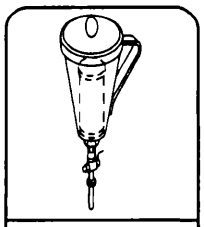

126 589 12 63 00

Oil

Hydraulic fluid	MB part no. 000 989 91 03/10 Refer to Factory Approved Service Products list

Note: Check fluid level with engine off. Correct if necessary.
With system in operating condition, the oil level should be between the MAX. and MIN. marks.

With vehicle loaded the resulting oil level will be near the MIN. mark (or below on vehicles with small reservoirs.)

Remove cap with integral dipstick front fluid reservoir. Read fluid level after wiping and reinserting dipstick.

Use filter funnel (060) to add fluid.

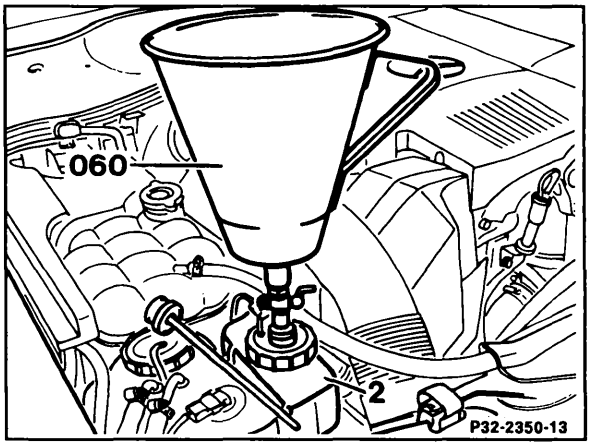

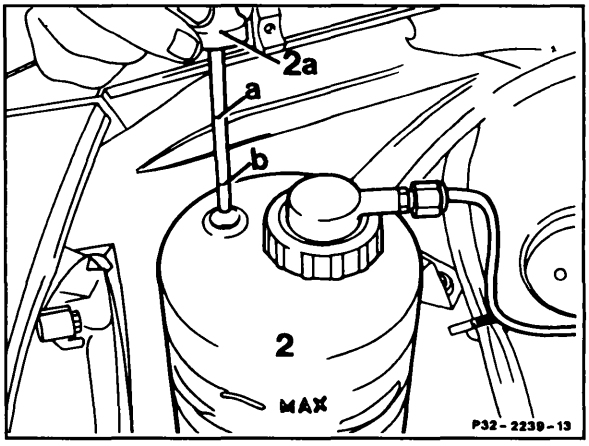

Model 123, 126 (1st version up through 08.1985)
Plastic fluid reservoir
2 Fluid reservoir
2a Cap with integral dipstick.
a Max. mark
b Min. mark
C Return line, level control - reservoir.

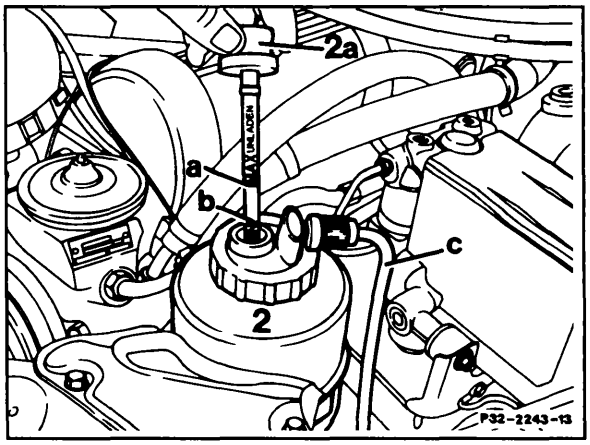

Model 126 (2nd version as of 09.1985)
Plastic fluid reservoir
2 Fluid reservoir
2a Cap with integral dipstick.
a Max. mark
b Min. mark
C Return line, level control - reservoir.

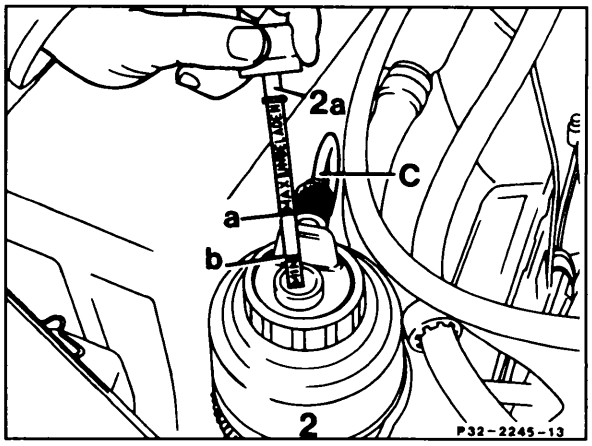

Model 124, 201
Plastic fluid reservoir
2 Fluid reservoir
2a Cap with integral dipstick.
a Max. mark
b Min. mark
C Return line, level control - reservoir.

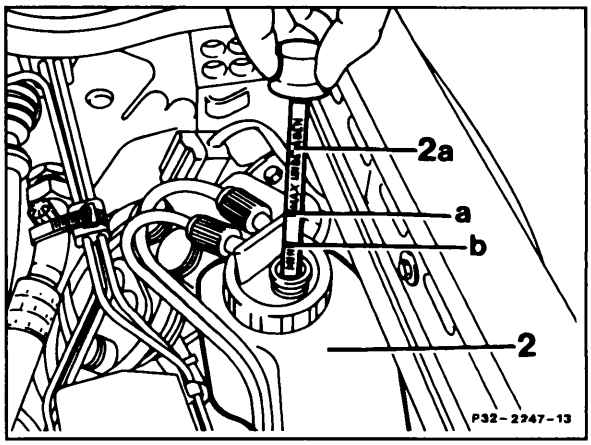

Model 124 with 4MATIC or ASD
2 Fluid reservoir
2a Cap with integral dipstick.
a Max. mark
b Min. mark
E1 Return line, hydraulic unit (connection T) -fluid reservoir
E2 Without level control:
Return line, hydraulic unit (connection N) -fluid reservoir
With level control:
Return line level control - fluid reservoir

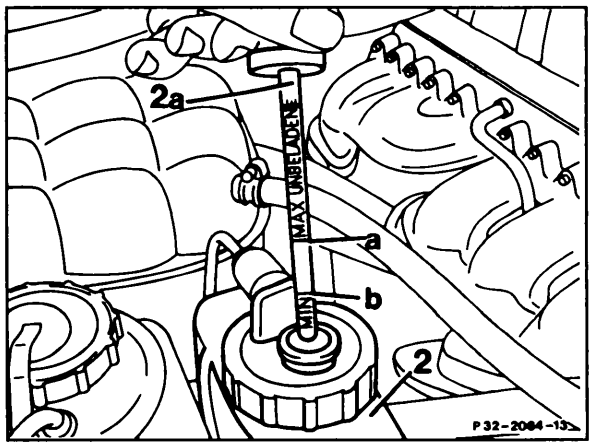

Model 129 with with ADS and/or ASD
2 Fluid reservoir
2a Cap with integral dipstick.
a. Max. mark
b Min. mark

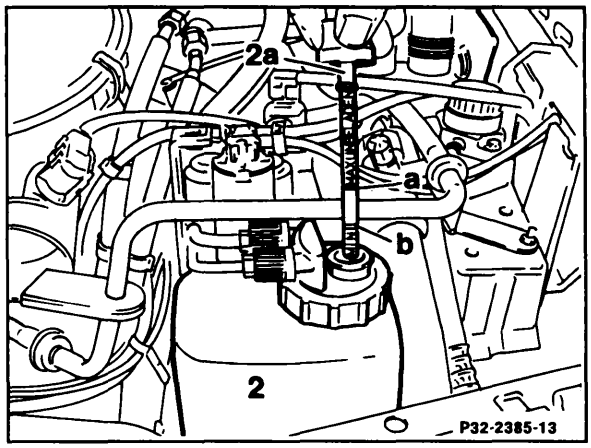

Model 140
2 Fluid reservoir
2a Cap with integral dipstick.
a. Max. mark
b Min. mark

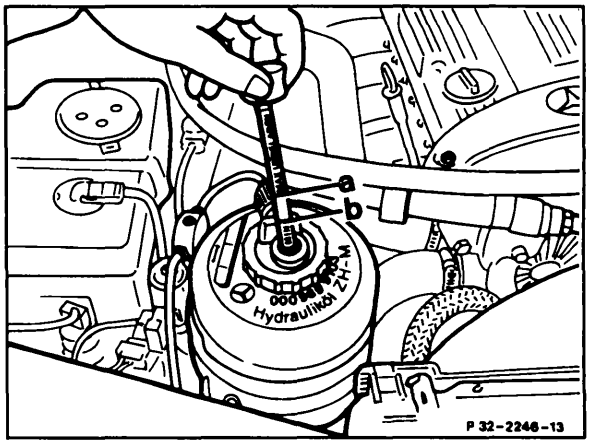

Model 201.034
Light alloy reservoir
2 Fluid reservoir
2a Cap with integral dipstick.
a. Max. mark
b Min. mark

Inspecting self-leveling suspension

3251

Model 123
126 up through 08.1985

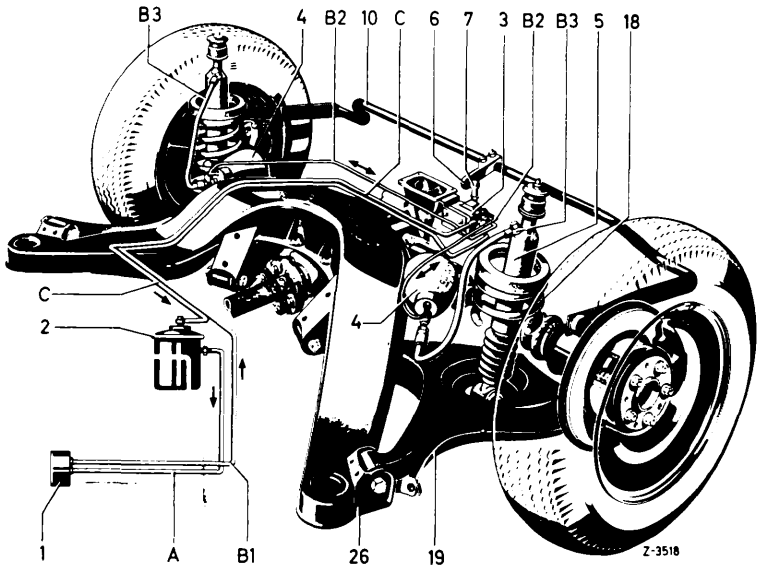

Visual inspection

Hydraulic fluid pump
Fluid reservoir
Level controller
Pressure reservoir
Spring struts
Line connections

Check hoses and lines for chafing, dents, cracks, corrosion, and leaks (with engine running).

Note: To check for leaks that may only occur when the vehicle is loaded, check vehicle with the engine running and with vehicle rear loaded with approx. 150 kg (or 2 persons).

Rear axle oil change

3501

All models

Oil grades

Differential **without** limited slip approved oil grades	Hypoid gear oil SAE 90, 85W/90 Refer to MBNA Factory Approved Service Products list
Differential **with** limited slip and vehicles with 4MATIC approved oil grades (note information plate on rear axle housing)	Special hypoid gear oil SAE 90 Refer to MBNA Factory Approved Service Products list

Capacities

Model	Liters
107.025/045/048, 124.034/036/051, 126.03/04, 129.061/066, 140.03/04	1.3
123, 126.02, 126.1	1.0
201.024/122/126	0.7
124.026/03/050/09/13/19/2, 201.028/029/03 124 with 4MATIC	1.1
140.05/134	1.4

Special tools

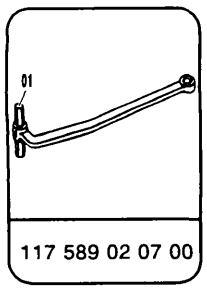

Commercial tools

14 mm hex. driver insert, 1/2" square drive	obtain locally

Note: Vehicle should be horizontal when checking oil level and when changing oil.

- Prior to oil change, check rear axle for leaks.
- Drain oil only with rear axle at operating temperature.
- Add specified quantity of oil.
- Check oil level. Oil level should be up to filler opening.
- Torque oil filler plug and drain plug to 50 Nm.

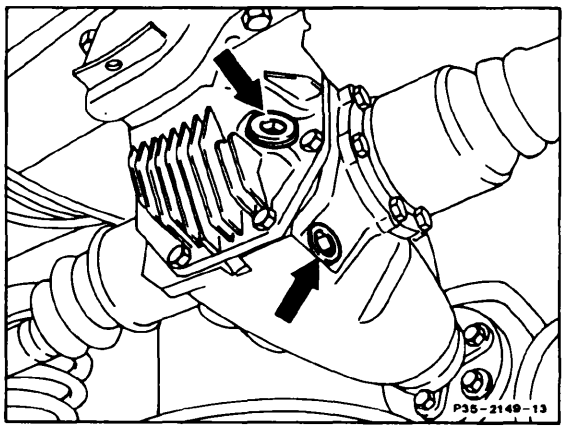

Rear axle centerpiece **with** side bearing covers model 123 (up through 01.1981)

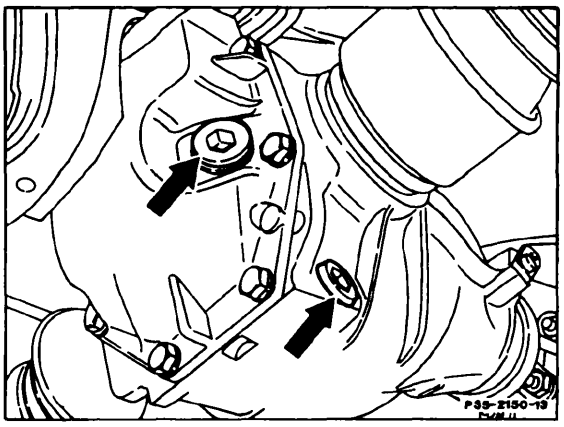

Rear axle centerpiece **without** side bearing covers model 123 (from 02.1981) model 126.02/1 (from start of production)

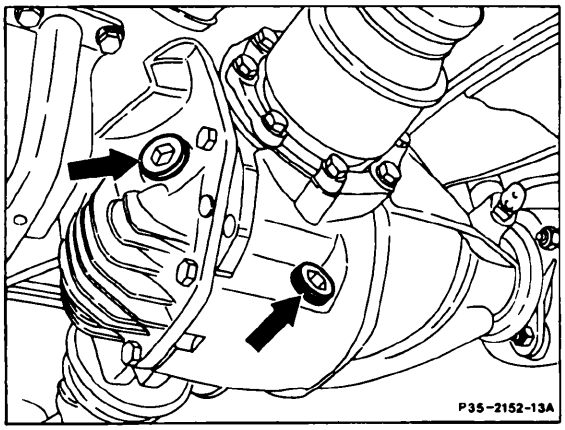

Model 107.025/045/048, 126.03/04
Differential **without** limited slip

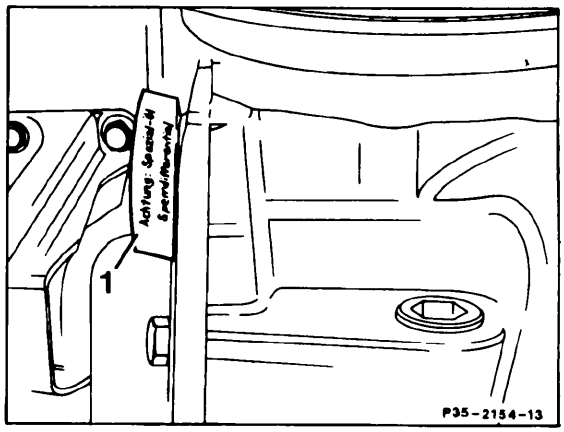

Model 126.04
Differential **with** limited slip
1 Information plate for limited slip differential

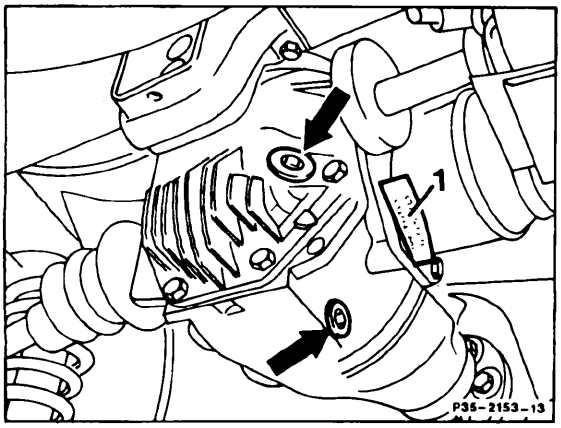

Model 107.025/045/048, 126.03
Differential **with** limited slip
1 Information plate for limited slip differential

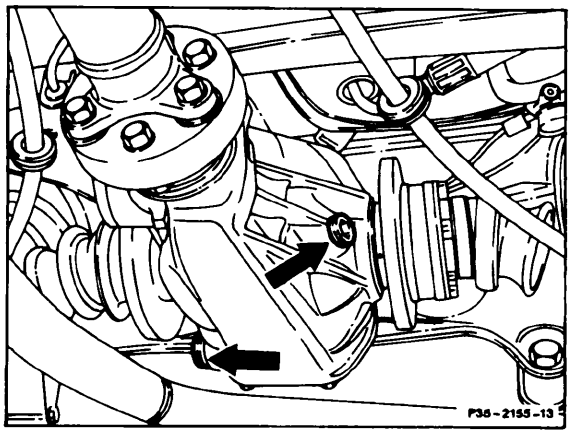

Model 124, 201

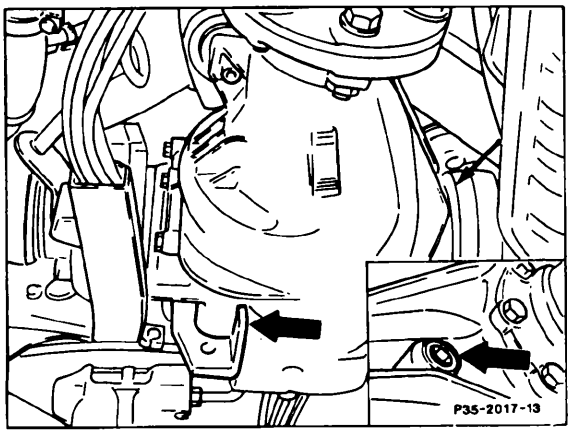

Model 129, 140

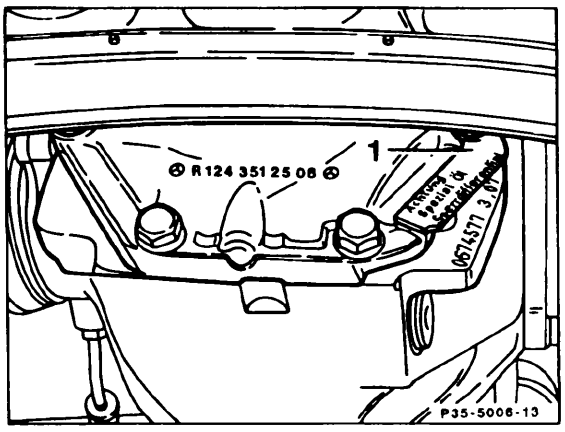

Vehicles with 4MATIC or ASD
1 Information plate for limited slip differential

Rear axle, checking, correcting oil level

3510

All models

Oil grades

Differential **without** limited slip approved oil grades	Hypoid gear oil SAE 90, 85W/90 Refer to MBNA Factory Approved Service Products list
Differential **with** limited slip and vehicles with 4MATIC approved oil grades (note information plate on rear axle housing)	Special hypoid gear oil SAE 90 Refer to MBNA Factory Approved Service Products list

Special tools

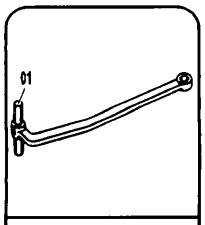

117 589 02 07 00

Commercial tools

Screwdriver insert 14 mm, 1/2 " square	obtain locally

Note: Vehicle should be horizontal when checking oil level.

- Remove oil filler plug.

- If a minimal amount of oil runs out or if the oil level is at lower edge of opening, oil level is correct.

- If not, add oil.

Install filler plug, and torque to 50 Nm.

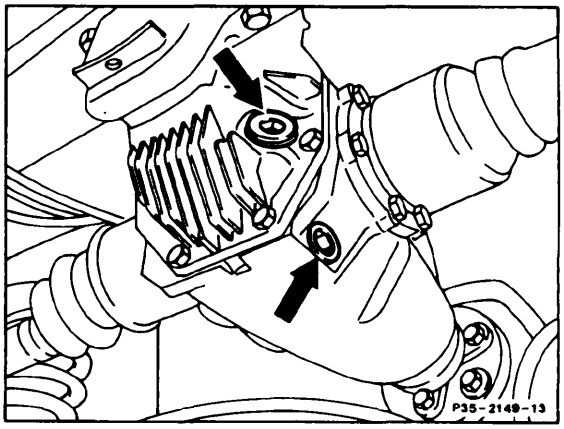

Rear axle centerpiece **with** side bearing covers model 123 (up through 01.1981)

- If oil loss is excessive, determine cause and repair on separate order

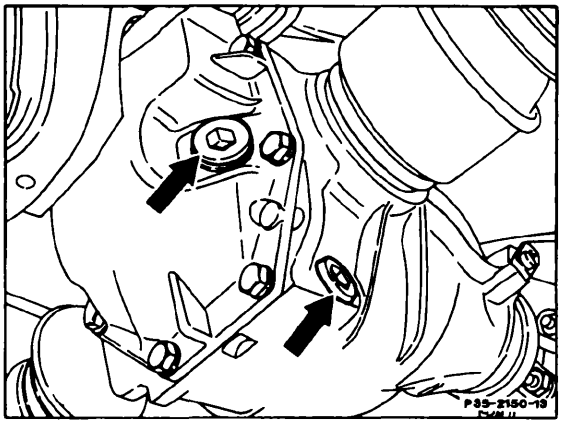

Rear axle centerpiece **without** side bearing covers model 123 (from 02.1981) model 126.02/1 (from start of production)

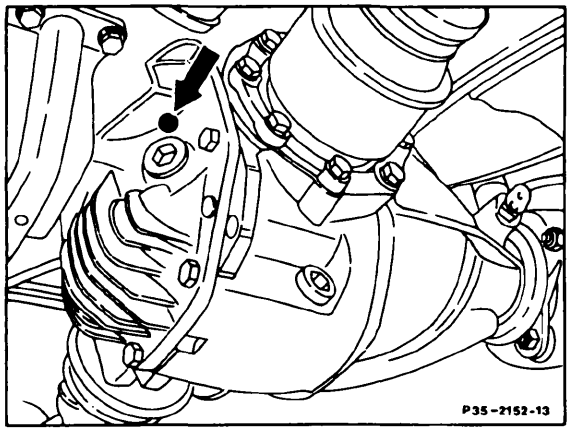

Model 107.025/045/048, 126.03/04
Differential **without** limited slip

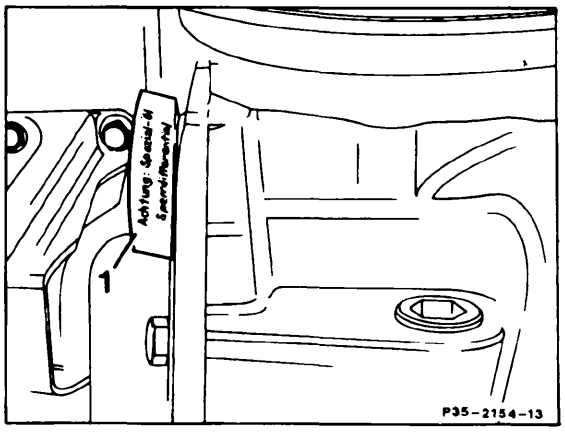

Model 126.04
Differential **with** limited slip
1 Information plate for limited slip differential

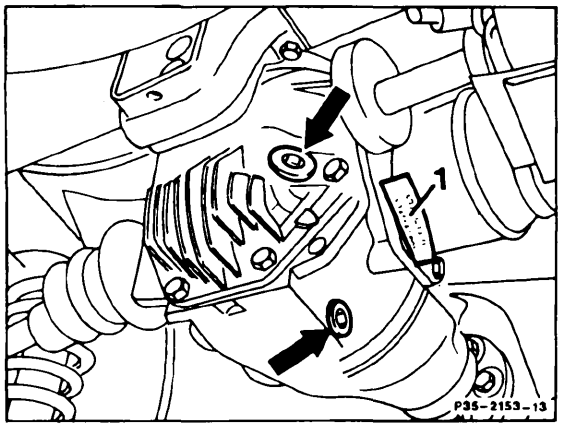

Model 107.025/045/048, 126.03
Differential **with** limited slip
1 Information plate for limited slip differential

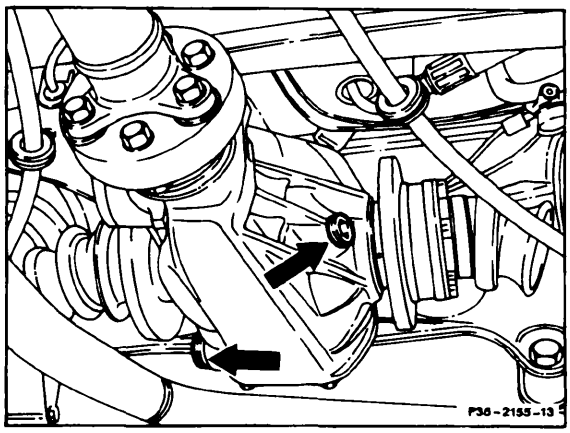

Model 124, 201

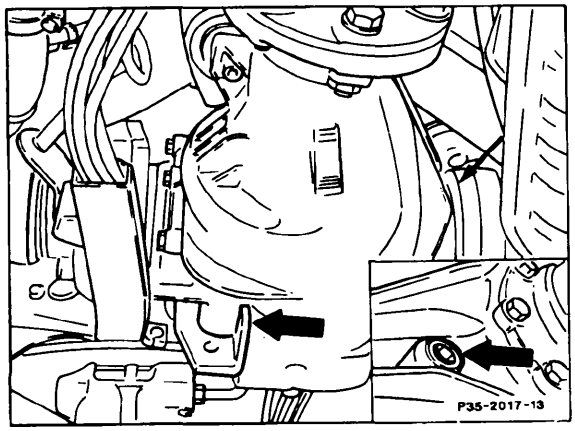

Model 129, 140

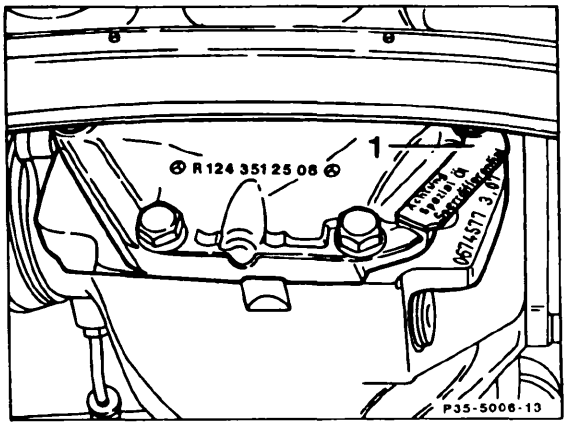

Vehicles with 4MATIC or ASD
1 Information plate for limited slip differential

Rear axle mount, adjusting limiting stop

3565

Model 123 with engine 616 617

Adjustment specifications	
Clearance between deflection limiting rubber stop and front mount supporting plate	2-3 mm

Torque specifications	Nm
Bolt with self-locking nut for securing limiting stop	40-50

Note: When checking and adjusting the rear axle mount limiting stops, the vehicle's weight must be on the wheels.

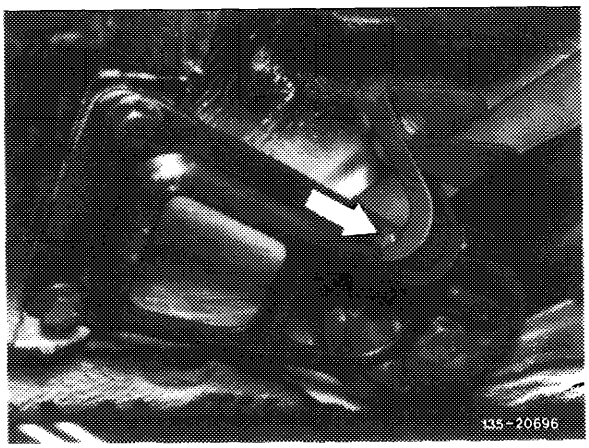

Adjusting

Loosen bolt.

Insert adjustment gauge between rubber buffer and supporting plate (arrow).

Note: The gauge should be locally fabricated to the following dimensions:

Length:	60 mm
Height	20 mm.
Width	10 mm.
Thickness	2.5 mm.

Press limiting stop slightly upward and torque bolt to 40-50 Nm.

Remove adjustment gauge.

35–110 Removal and installation of camber strut

Preceding work:
Remove, install wheels 40-110.

Operation no. of operation texts and work units or standard texts and flat rates:
35–0044

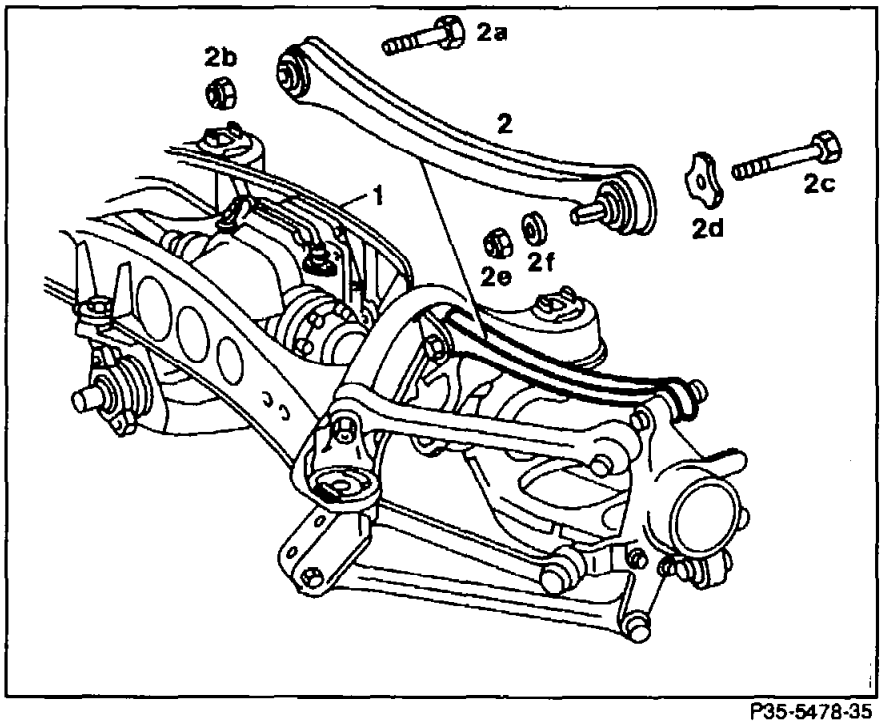

P35-5478-35

Camber strut (2) on rear axle bracket	Unscrew, replace, screw on, self-locking hexagon nut (2b), 70 Nm, only tighten when the rear axle shaft is horizontal (number 1). Torque wrench 001 589 66 21 00.
Camber strut (2) on wheel carrier	Unscrew, screw on self-locking hexagon nut (2e) (number 2). Remove hexagon bolt (2c), shaped washer (2d), washer (2f) and hexagon nut (2e) and replace. Press tensioning sleeves out of wheel carrier, remove camber strut (number 3, 4). Only tighten hexagon nut when rear axle shaft is horizontal, 45 Nm. Torque wrench 001 589 66 21 00.
Rubber mount	Check for damage, replace camber strut if required (number 5).

Special tools

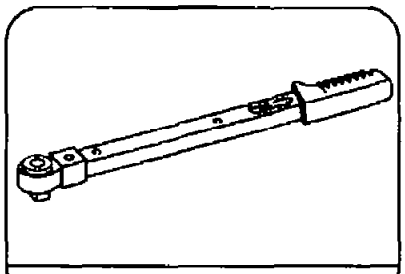

Note

The rubber mounts of the camber strut cannot be replaced individually. The camber strut is only available as a replacement part with rubber mount. The mounts can be removed or installed when the rear axle is installed.

Removal, installation

1 Loosen self-locking hexagon nut of camber strut (2) on rear axle bracket. Remove hexagon bolt.

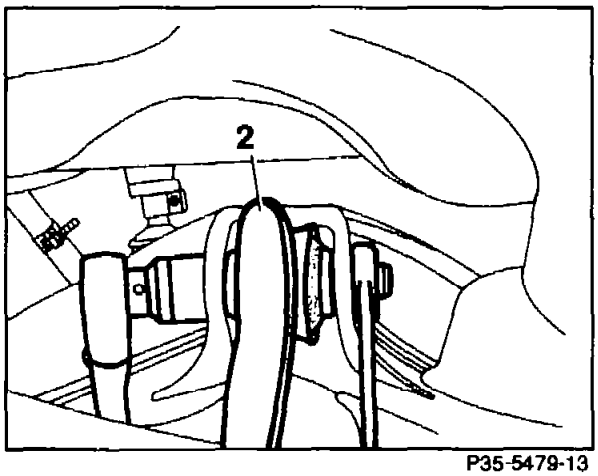

P35-5479-13

Installation note

Replace hexagon nut and hexagon bolt. Before tightening, position the rear axle shaft horizontally. Tightening torque 70 Nm. Torque wrench 001 589 66 21 00.

⚠

When raising one side of the rear axle until the rear axle shaft is horizontal, ensure that the vehicle does not lift off the supporting surface of the hoist - risk of accident.
If necessary, load up the trunk.

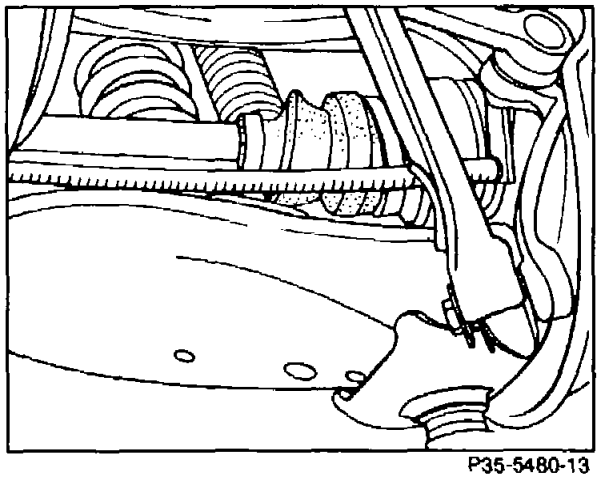
P35-5480-13

2 Loosen self-locking hexagon bolts on the wheel carrier. Remove hexagon nut, hexagon bolt, shaped washer and washer.

Installation note
Replace hexagon nut, hexagon bolt and shaped washer. The rear axle shaft should be horizontal before tightening. Tightening torque 45 Nm. Torque wrench 001 589 66 21 00.

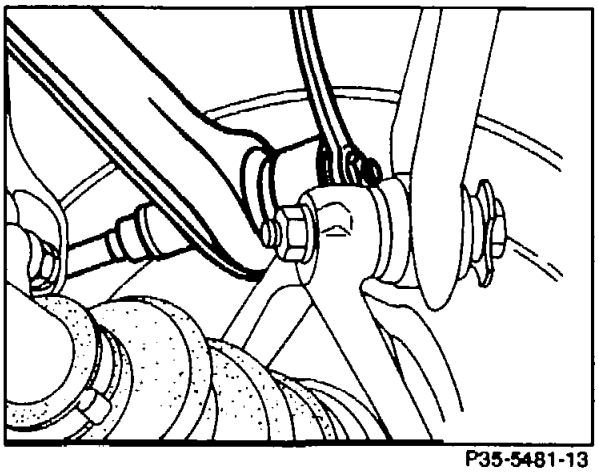
P35-5481-13

3 Press tensioning sleeve (2g) out of wheel carrier (arrow).

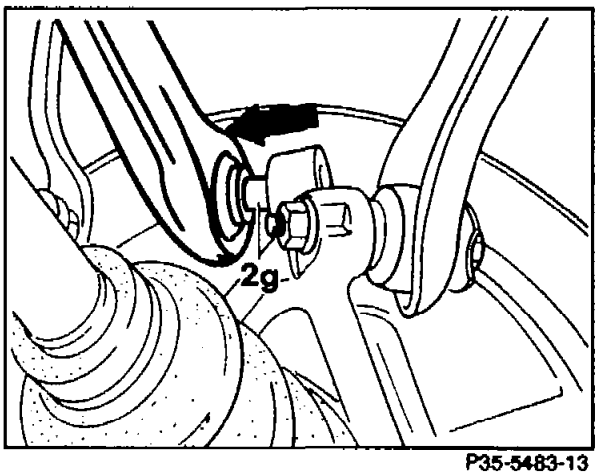

P35-5483-13

4 Press camber strut upwards out of rear axle bracket mounting, press wheel carrier outwards slightly (arrow), remove camber strut downwards.

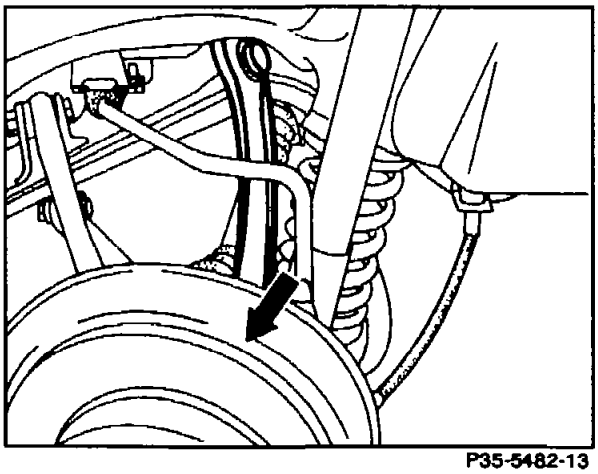
P35-5482-13

5 Check rubber mount, replace camber strut complete in the event of damage.

6 Install in reverse sequence.

35–111 Removal and installation of torque strut

Preceding work:
Remove, install wheels 40-110.

Operation no. of operation texts and work units or standard texts and flat rates:
35–0047 35–0048 35–0049

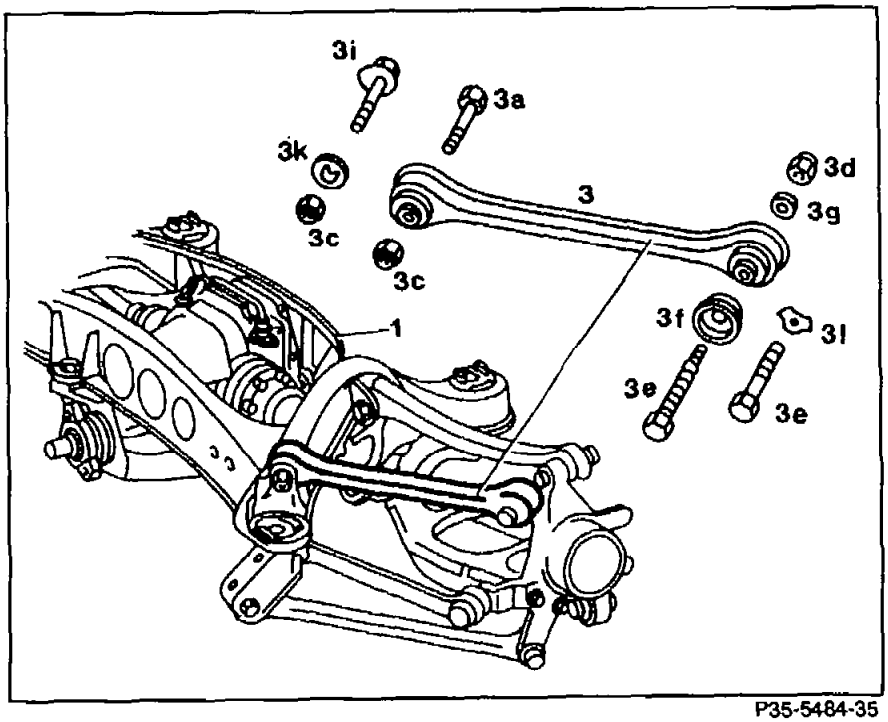

P35-5484-35

Note
On vehicles up to 03/86, the position of the eccentric bolt (3i) must be marked in relation to the rear axle bracket before the hexagon nut is loosened. Remove hexagon nut (3c) and eccentric disk (3k), replace (number 1).

As of 04/86, the eccentric adjustment has been dispensed with, due to rationalization.

Torque strut (3) on rear axle bracket . . . . . Loosen, replace, tighten self-locking hexagon nut (3c). 70 Nm or 50 Nm when using the special ring wrench 201 589 00 03 00. Remove hexagon bolt (3a). Only tighten when rear axle shaft is in horizontal position. On vehicles up to 03/86, the markings of the eccentric bolt of rear axle bracket must be noted (number 2). Torque wrench 001 589 66 21 00.

Torque strut (3) on wheel carrier	Loosen, tighten self-locking hexagon nut (3d). Remove hexagon bolt (3e), shaped washer (3f, 3l up to 03/86 or 3i) and remove washer (3g). If fitted, press tensioning sleeve out of wheel carrier (up to 08/86). Replace self-locking hexagon nut (3d), M10 x 1 = 45 Nm, M12 x 1.5 = 70 Nm. (numbers 3, 4, 4a). Only tighten self-locking hexagon nut when rear axle shaft is horizontal. Torque wrench 001 589 66 21 00 Special ring wrench 201 589 00 03 00.
Inclination of wheel carrier and toe-in	Check, on vehicles up to 03/86 (number 6).
Torque strut rubber mount	Check, replace torque strut complete in event of damage.

Special tools

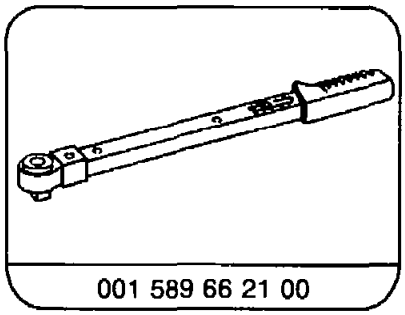

Note

The rubber mounts of the torque strut are not to be replaced individually. The torque strut is only available as a special part with rubber mount. The torque strut can be removed or installed when the rear axle is installed.

Removal, installation

1 On vehicles up to 03/86, the position of the eccentric bolt (3i) to the rear axle bracket (1) must be marked (arrows).

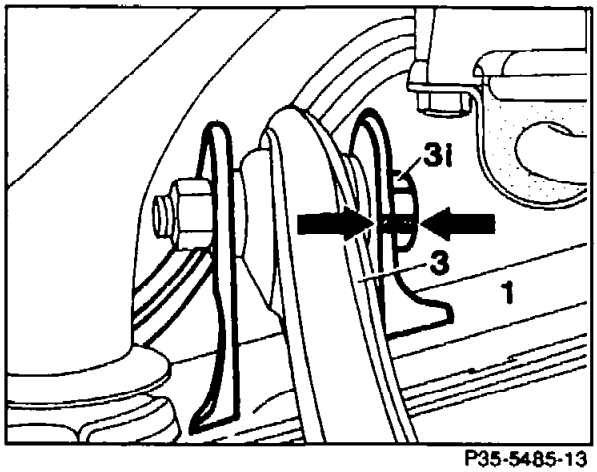

P35-5485-13

2 Unscrew self-locking hexagon nut on rear axle bracket. Press wheel carrier forwards, release load. Remove hexagon bolt or eccentric bolt with eccentric washer and hexagon nut.

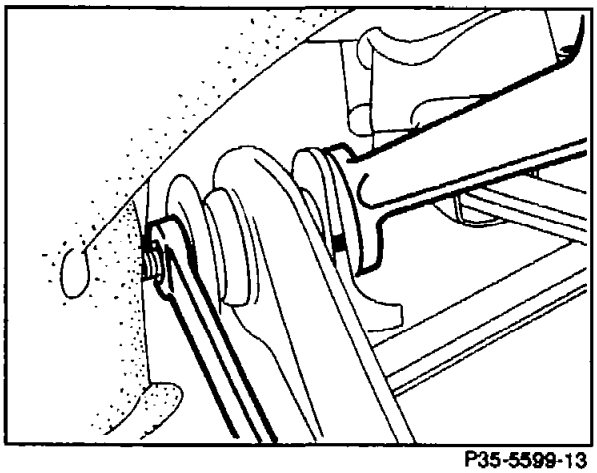
P35-5599-13

Installation note

Replace self-locking hexagon nut. Before tightening, the rear axle shaft should be horizontal. On vehicles with eccentric bolt, it should be ensured that the markings of the eccentric bolt to the rear axle bracket align. Tightening torque 70 Nm or 50 Nm when using the special ring wrench (033) 201 589 00 03 00. Torque wrench 001 589 66 21 00

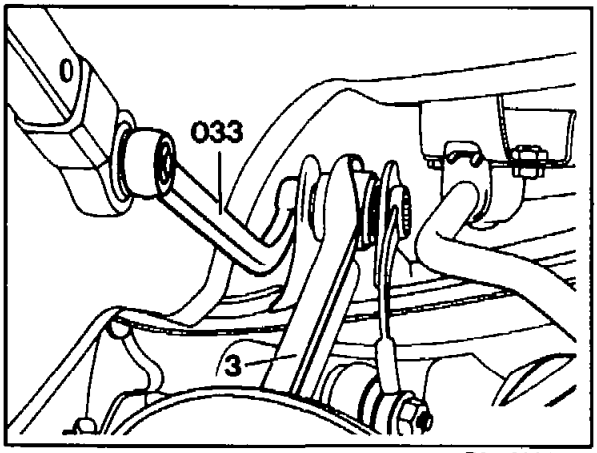

P35-2009-13

⚠

When raising one side, ensure that the vehicle does not lift off the supporting surface of the hoist - risk of accident.

If necessary, load up the trunk.

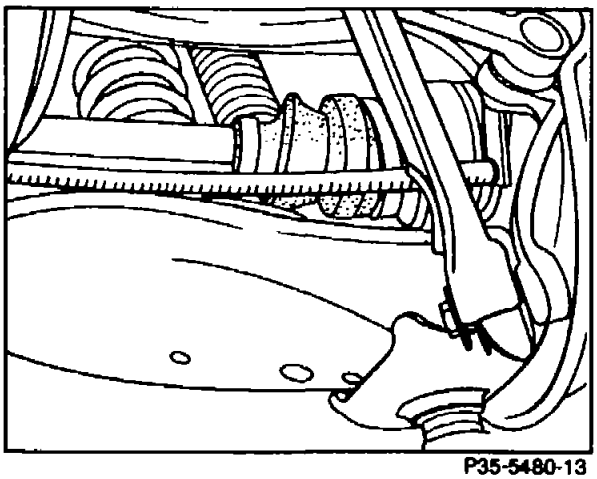
P35-5480-13

3 Unscrew self-locking hexagon nut (3d) on wheel carrier and remove with washer.

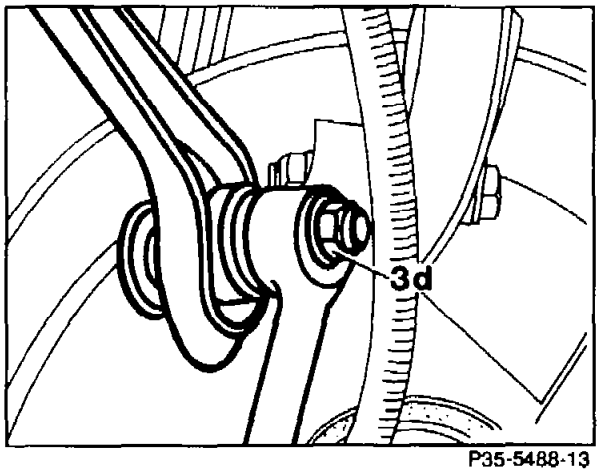

P35-5488-13

Installation note

Replace hexagon nut. Tighten when rear axle shaft is horizontal, refer to table for tightening torques.

Torque wrench 001 589 66 21 00.

Tightening torques

Model	Hexagon bolt M10×1	Hexagon bolt M12×1.5
201 up to 08/86 except 201.03	45 Nm	–
Model 201.03	–	70 Nm
Model 124 and 201 as of 09/86	–	70 Nm

4 Remove hexagon bolt (3e) with shaped washer (3f) and press torque strut with tensioning sleeve out of wheel carrier.

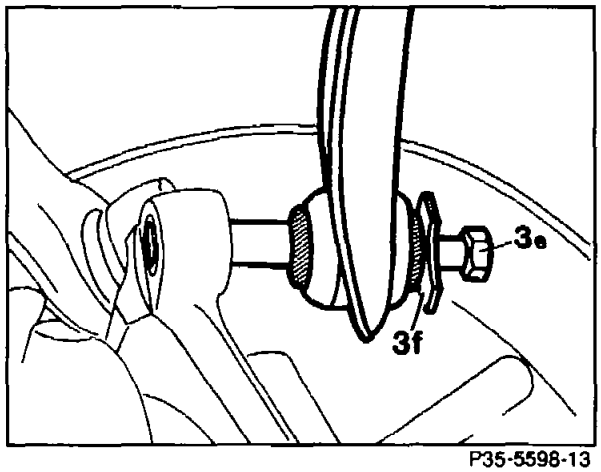

P35-5598-13

1st version up to 08/86

4a Press hexagon bolt (3e) forwards out of wheel carrier and remove complete with torque strut. Remove hexagon bolt (3e) and shaped washer (3f).

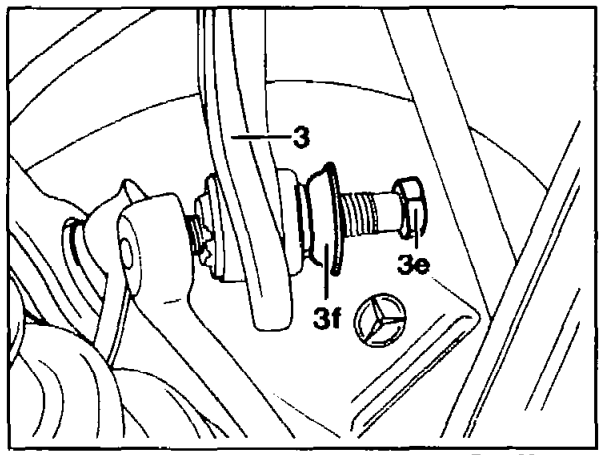

P35-2011-13

2nd version as of 09/86

5 On vehicles up to 03/86 with eccentric bolt, the inclination of the wheel carrier and the toe-in is to be checked.

Checking
In the event of damaged rubber mounts, replace torque strut complete.

6 Install in reverse sequence.

35–112 Removal and installation of tie rod, replacement of rubber mount

Preceding work:
Removal, installation of wheels 40–110.

Operation no. of operation texts and work units or standard texts and flat rates:
35–0056, 35–0057, 35–0058

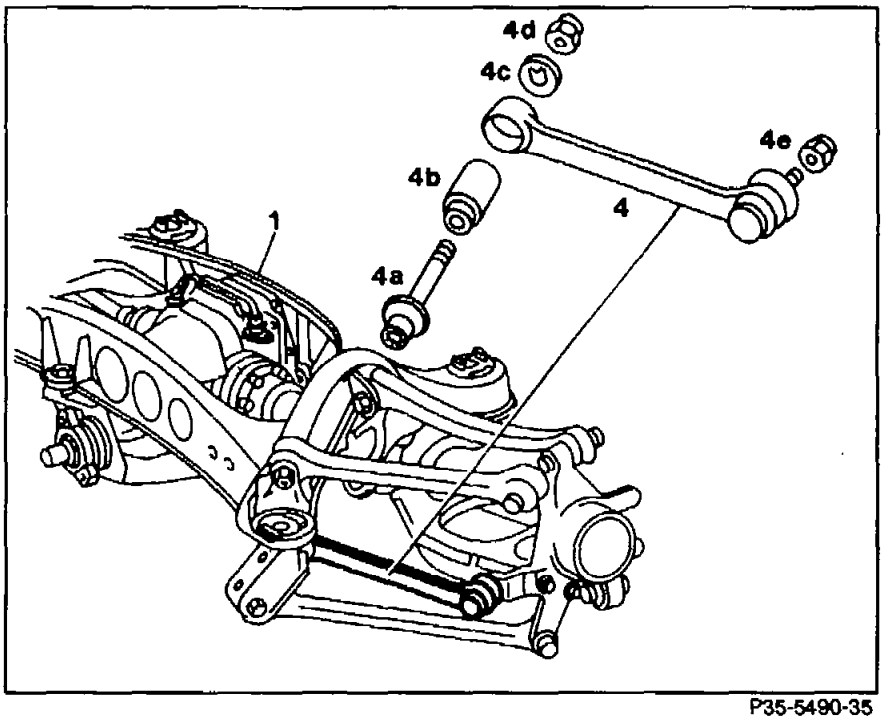

P35-5490-35

Tie rod (4) on wheel carrier	Loosen, replace self-locking hexagon nut (4e). Using puller 201 589 01 33 00 and thrust piece 201 589 05 63 00, press tie rod (4) out of wheel carrier. Clean conical seat of ball pin in wheel carrier. Press ball pin of tie rod firmly into wheel carrier. Steady using hexagon socket wrench, and tighten self-locking hexagon nut to 35 Nm (numbers 1, 2 and 3). Torque wrench 001 589 72 21 00.

Tie rod (4) on rear axle bracket	Mark position of eccentric (4a) to rear axle bracket (number 4). Loosen, replace, tighten self-locking hexagon nut (4d), 70 Nm. Remove eccentric washer (4c) and eccentric bolt (4a). *Only tighten self-locking hexagon nut when rear axle shaft is horizontal.* Note markings of eccentric bolt or rear axle bracket (number 5). Torque wrench 001 589 66 21 00.
Rubber mount (4b)	Remove, replace, install using extractor/pulling-in equipment 124 589 02 43 00 (number 6).
Rubber cup seal and ball joint of tie rod	Check, replace complete tie rod if required.
Toe-in of rear axle	Check, adjust if required (40–330).

Special tools

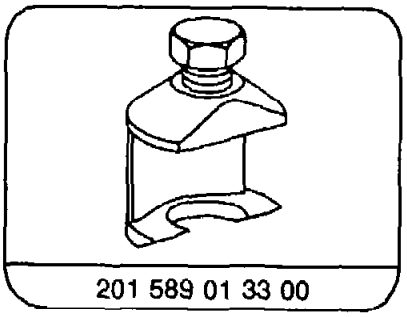

201 589 01 33 00

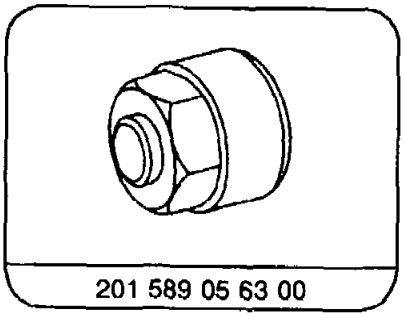

201 589 05 63 00

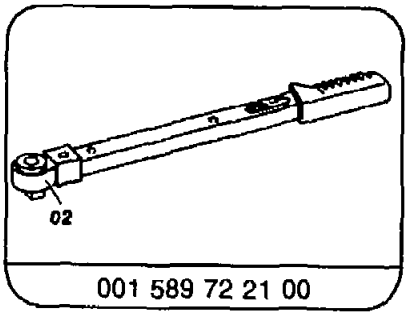

001 589 72 21 00

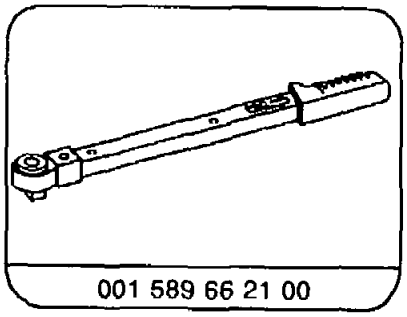

001 589 66 21 00

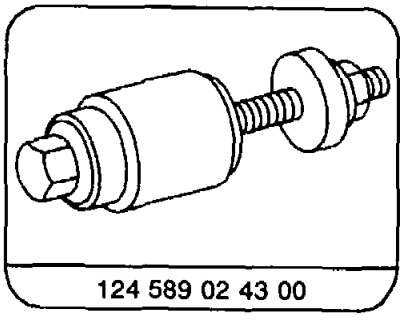

124 589 02 43 00

Removal, installation

1 Unscrew self-locking hexagon nut on wheel carrier and remove.

2 Screw thrust piece 201 589 05 63 00 on to thread.

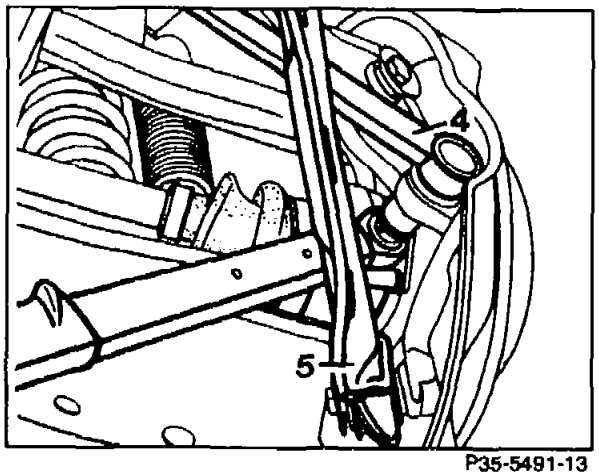

P35-5491-13

3 Using puller (04) 201 589 01 33 00, press tie rod out of wheel carrier.

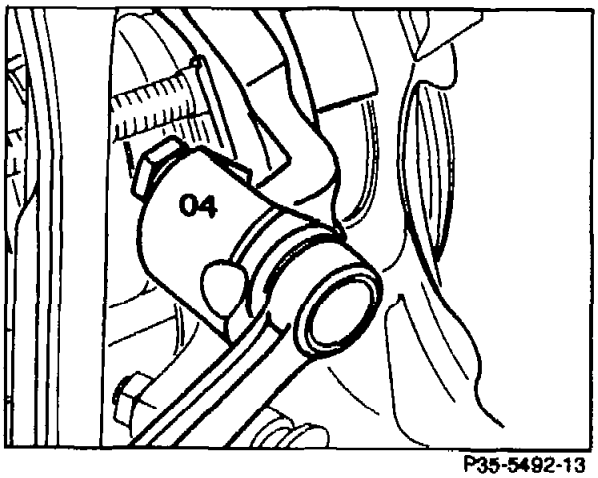

P35-5492-13

Installation note

Replace self-locking hexagon nut. Remove grease from ball pin and conical seat in wheel carrier. Press ball pin securely into taper of wheel carrier, screw on self-locking hexagon nut whilst steadying ball pin using hexagon socket wrench (04a). Tightening torque 35 Nm. Torque wrench 001 589 72 21 00.

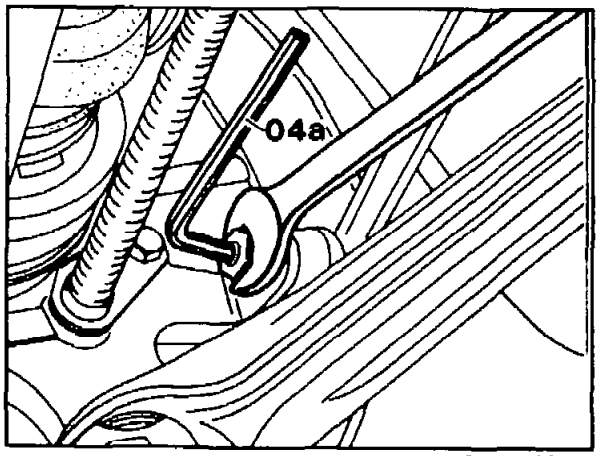

P35-5493-13

4 Mark position of eccentric bolt (4a) to rear axle bracket (1) (arrow).

Installation note

Mount eccentric bolt as marked.

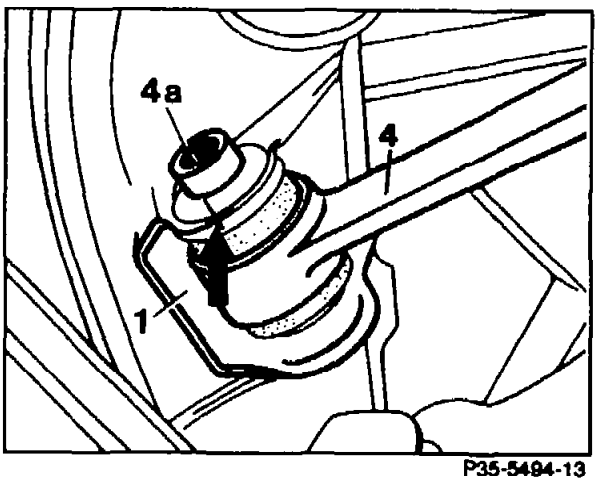

P35-5494-13

5 Unscrew self-locking hexagon nut and remove complete with eccentric washer, eccentric bolt (4a) and tie rod (4).

Installation note

Replace self-locking hexagon nut. Only tighten when rear axle shaft is horizontal. Tightening torque 70 Nm.
Torque wrench 001 589 66 21 00.

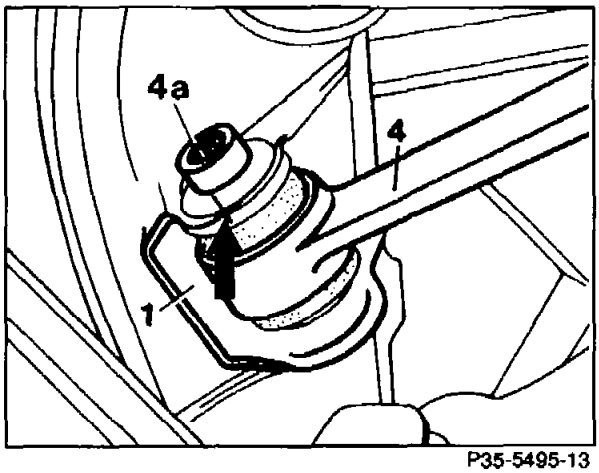

P35-5495-13

⚠
When raising one side of the rear axle until the rear axle shaft is horizontal, ensure that the vehicle does not lift off the supporting surface of the hoist - risk of accident.
If necessary, load up the trunk.

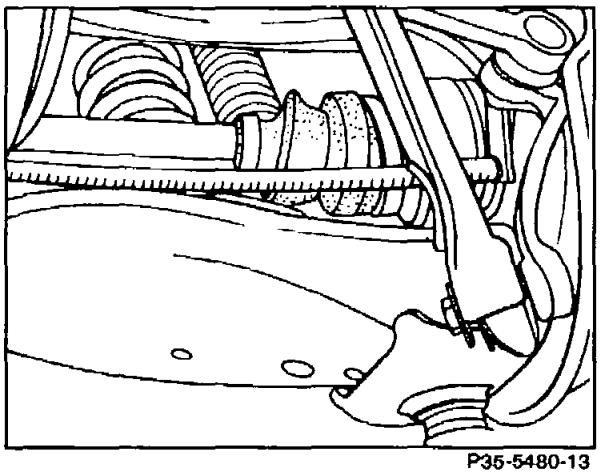
P35-5480-13

Testing

Replace damaged rubber mounts and if the rubber cup seal is damaged or the ball joint is worn, replace tie rod.

Replacement of rubber mount

6 Using extractor (04a–04d) 124 589 02 43 00 pull rubber mount (4b) out of tie rod (4).

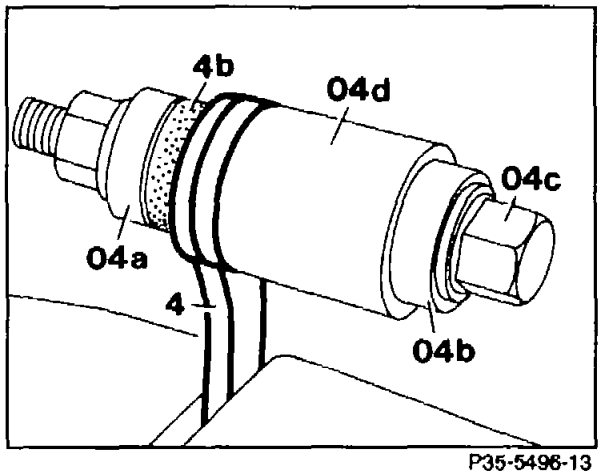

P35-5496-13

4 Tie rod
4b Rubber mount
04a Pressure ring
04b Thrust washer with axial needle bearing
04c Hexagon bolt with hexagon nut
04d Sleeve

Installation note

Using pulling-in equipment (04a–04d) draw rubber mount (4b) into the tie rod until the spacer (04a) contacts the eye on the tie rod.

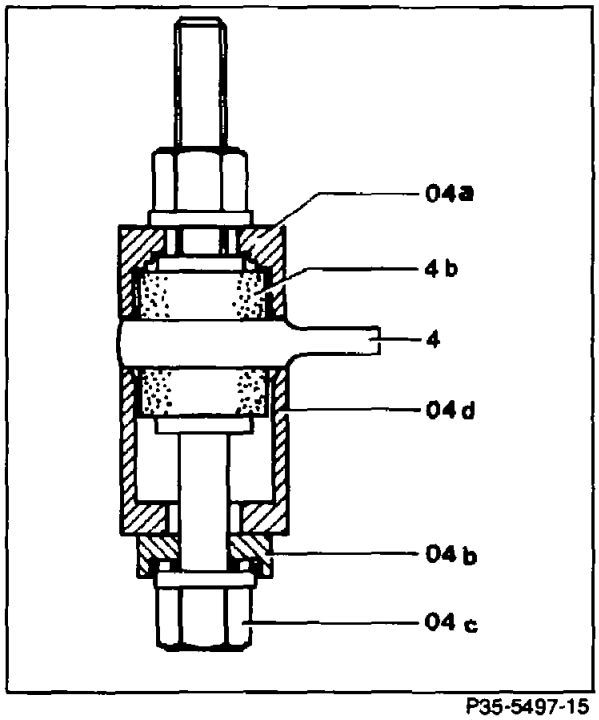

P35-5497-15

04a	Spacer
04b	Thrust washer with axial needle bearing
04c	Hexagon screw with hexagon nut
04d	Sleeve
4	Tie rod
4b	Rubber mount

7 Check toe-in of rear axle, adjust if required (40–330).

8 Install in reverse sequence.

All Models

Torque specifications	Nm
Wheel bolts M12 x 1.5 (All models except 140)	110
Wheel bolts M14 x 1.5 (Model 140 only)	150

Special tools

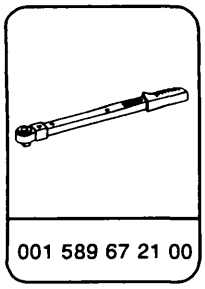

001 589 67 21 00

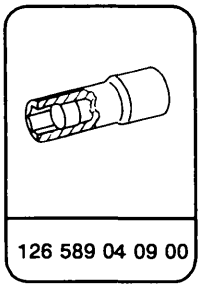

126 589 04 09 00

Commercial tools

Electric or pneumatic impact wrench, torque limited to 100 Nm	obtain locally
Hex. socket 17 mm for impact wrench, OD max. 26.5 mm	obtain locally

- Remove metal wheel cover by hand or with combination wrench.

- Grasp edge of plastic wheel cover with both hands and pull off.

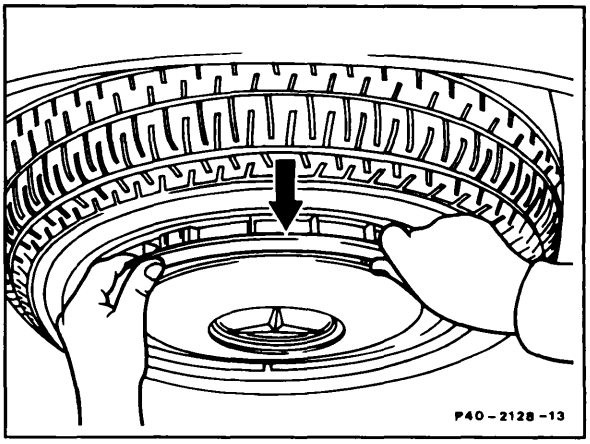

- Loosen wheel bolts and remove.

- When removing last wheel bolt on light alloy wheels, make sure that the wheel does not tilt, since this can damage the paint.

- Check inside of wheel (arrow) for dirt. Clean wheels, if required.

- Check centering opening and bolt hole seats and rim flanges for damage.

- Check related components (wheel, as well as front wheel hub or brake disk bowl) for corrosion, clean corroded surfaces with wire brush or emery cloth, if necessary.

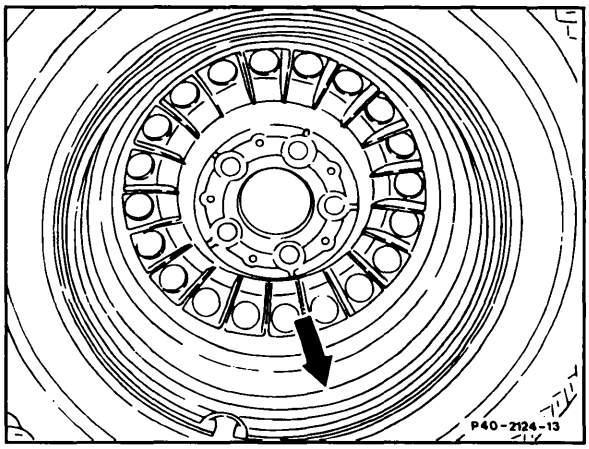

Rotating wheels

Maximum tire mileage and good handling characteristics require rotating tires before a heavy wear pattern is visible. Tires should be inspected during routine service visits for wear patterns (refer to Job No. 4051), and if necessary, rotated from front to rear while maintaining direction of rotation.

To avoid deterioration of the handling characteristics, rotate the wheels before the tires show a distinct wear pattern.

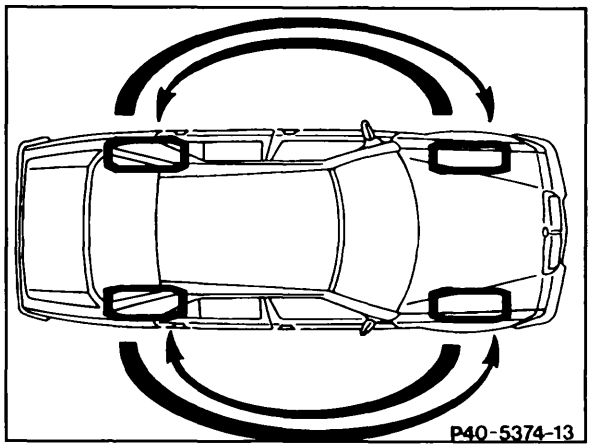

Rotating the wheels

If the tires show even sawtooth wear, the wheels can also be rotated diagonally, provided the tires do not have a directional tread pattern.

- Depending on driving style, wear pattern and condition of tires, the wheels may require rebalancing.

- After rotating wheels, correct tire inflation pressure (refer to Job No. 4060).

- Make sure that the correct wheel bolts are used for the type of wheel.

- Check that wheel bolts thread in smoothly. Replace bolts that are hard to turn or that are corroded at the spherical collar (e.g. from road salt).

- Inspect threads in front wheel hubs and rear axle flanges and repair, if necessary.

- Use only original equipment Mercedes Benz wheel bolts. Identification: Mercedes star stamped on face of bolt shaft or on head of bolt.

- On light alloy wheels with recessed mounting holes, screw centering bolt (039) into the uppermost hole (arrow) prior to positioning wheel.
The centering bolt is included in the vehicle tool kit or with the spare wheel in a rubber sleeve.

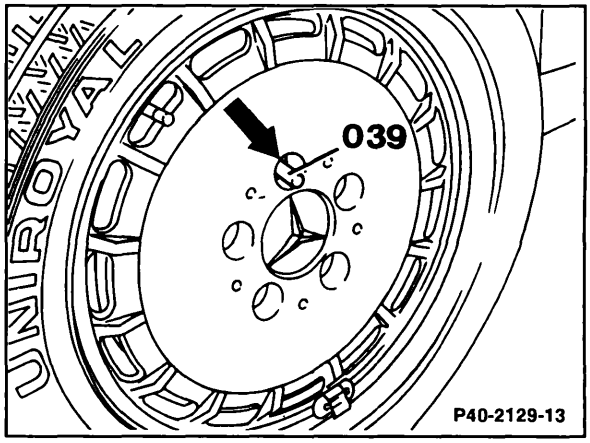

- Install wheels. The wheel bolts can also be tightened with an impact wrench up to 3/4 of the specified torque. Then, final tighten bolts with torque wrench.

- Note torque sequence and specification (refer to job no. 4070).

Note: When using power wrench on light alloy wheels, the OD of the socket should not exceed 26.5 mm, since otherwise the socket will damage the wheel. When screwing in the first wheel bolt on light alloy wheels, make sure that the wheel does not tilt, since the paint can be damaged.

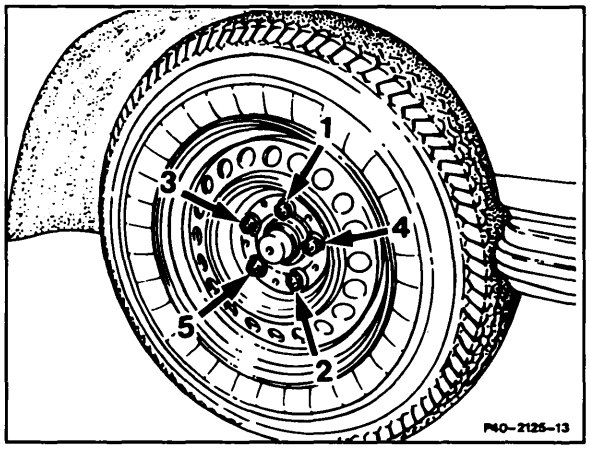

- Insert metal wheel cover on rim in such a manner that the valve is located between two retaining springs. Push on wheel cover first toward valve (arrow) and then push in at side opposite from valve.

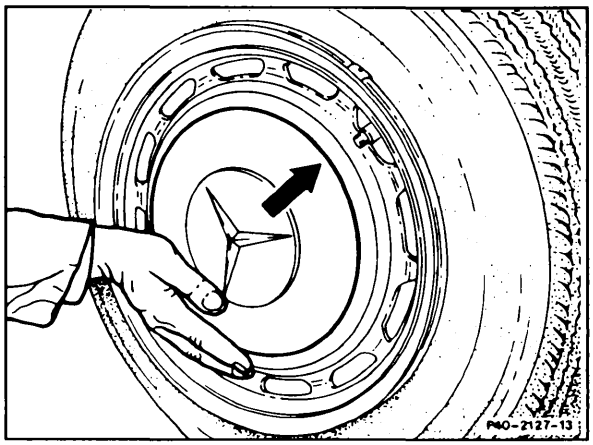

- Position wheel so valve is at 6 o'clock position. Position plastic wheel cover with valve recess at bottom, push in downward direction and press on by exerting pressure against upper edge of wheel cover (arrows).

Caution! Use care to correctly insert retaining clips into rim. This is especially important where the retaining clip aligns with a balance weight.

Do not apply pressure to, or strike, the center of plastic wheel cover to avoid damaging cover.

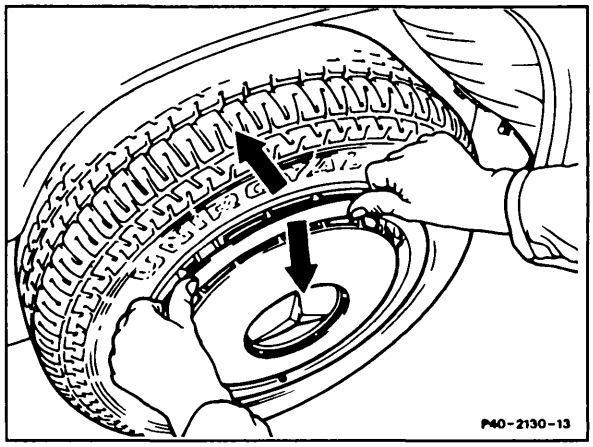

Inspecting tires

4051

All models

Check tires for cuts and other damage as well as for objects penetrating the inside walls of tread (outside and inside).

Check tire tread depth and enter in table.

Check wear pattern of tires noting the following points:

Tread depth	Front left	Front right
Outside		
Center		
Inside		
Tread depth	Rear left	Rear right
Outside		
Center		
Inside		

Front axle

It is normal to have somewhat greater wear on both shoulders of the front tires compared to the center tread. This wear pattern is caused by low tire pressure, fast cornering, releasing the accelerator abruptly in fast turns, or by a high proportion of city driving.

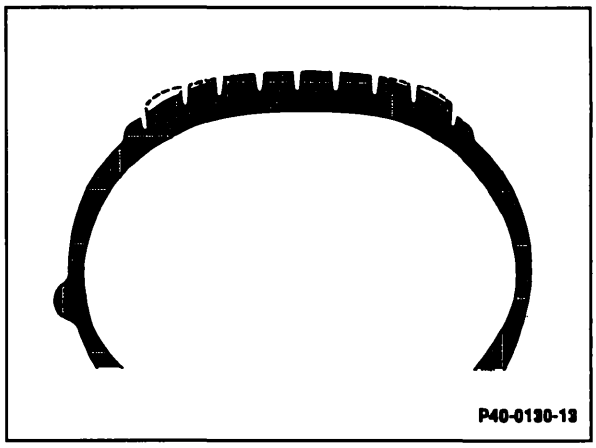

Shoulder wear on front tire

Rear axle

Wear is normally distributed over the entire tread are of the rear wheels, although it is usually somewhat higher at the center of the tread than on the shoulder. Depending on the rear vehicle load (increased negative camber with high load) the wear on the inner side of the tread area can be somewhat higher than on the outer side.

Rotate wheels, if required (refer to job no 4050).

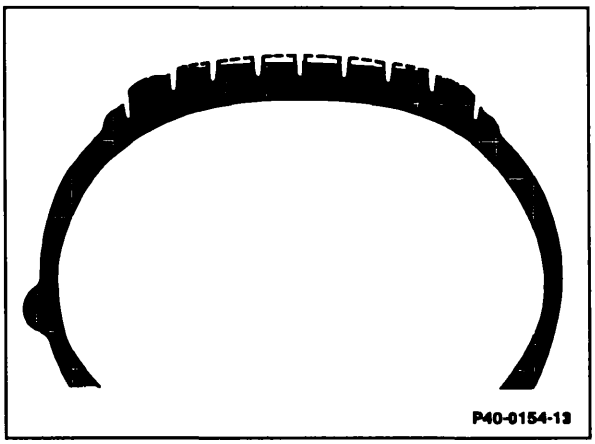

Center tread wear on rear tire

Correcting tire pressure

4060

All models

Note: When correcting tire pressure, also check spare tire.

The label on the tank filler flap lists the correct inflation pressures for the respective tires (summer and winter tires) as well as for various operating conditions.

Tire pressures listed for light loads are a minimum and afford optimum driving comfort. The higher tire pressure listed for heavy loads is also permissible for lightly loaded vehicles and has a positive effect on driving characteristics. However, the ride will be somewhat firmer.

Tire temperature and therefore tire pressure increase with vehicle speed and load. Tire pressure should normally only be adjusted with cold tires. Correct tire pressure of warm tires only if pressure has dropped below the pressures listed on the label and the operating conditions are taken into consideration. Never reduce tire pressure when warm.

Note: Tire pressure changes by approx. 0.1 bar per 10°C change in air temperature. This should be considered when checking/adjusting tire pressure in workshops, particularly in winter.

Example:

Ambient temperature = approx. +20°C
Outside temperature = approx. 0°C

Tire pressure to be set to specified pressure + 0.2 bar.

Tightening wheel bolts

4070

All models

Torque specifications	Nm
Wheel bolts M12 x 1.5 (All models except 140)	110
Wheel bolts M14 x 1.5 (Model 140 only)	150

Special tools

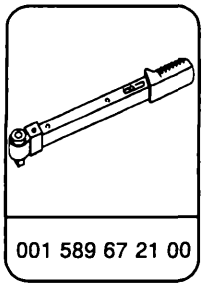

001 589 67 21 00

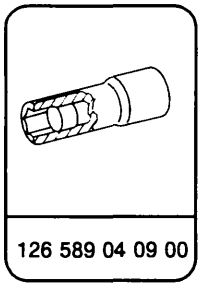

126 589 04 09 00

- Remove wheel covers from steel wheels, if so equipped.
- Always tighten wheel bolts with torque wrench.
- **Torque in correct sequence (arrows).**
- Replace wheel covers on steel wheels.

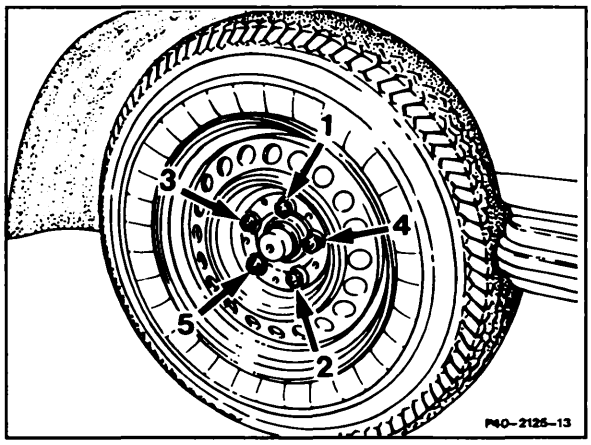

A. Vehicle level

Model	Front axle	Front axle	
		Without Level control	**With** Level control
	Ready-to-drive mm	Ready-to-drive mm	Ready-to-drive mm
Basic version	Tolerance $^{+10}_{-15}$	Tolerance ± 10	Tolerance ± 10
124.003/104/105	+ 30 $^{+6}_{-12}$	–	+ 25
124.004/007/008	+ 45 $^{+6}_{-12}$		+ 28
124.027/029/127/129	+ 36		+ 38
up to 10/88 124.02/03/043/05/12/13	+ 28	+ 30	+ 20
as of 11/88 124.019/020/021/022/ 023/026/028/030/ 031/032/04/05/120/ 125/126/128/13	+ 16	+ 18	+ 8
124.06	+ 8	+ 12	+ 4
124.079/08/09/18/19	+ 28	–	+ 25
124.106/107	+ 45 $^{+6}_{-12}$		+ 28
124.226/230/330/333	+ 31	+ 41	+ 32
124.290/393		–	+ 37
124.034	+ 9	+ 17	+ 16
124.036	–9	–	–13
up to 10/88 201	+ 30	+ 34	+ 25
as of 11/88 201	+ 15	+ 20	+ 10
201.034/035	+ 12	–	+ 13

Model	Front axle	Rear axle	
		without Level control	with Level control
	Ready-to-drive mm	Ready-to-drive mm	Ready-to-drive mm
	Tolerance $^{+10}_{-15}$	Tolerance ± 10	Tolerance ± 10

Suspension for increased ground clearance (SA 10881)

124.0 19/02/03/04/05/12/13	+ 41	+ 42	+ 32
124.079/08/09/18/19		–	+ 38
124.226/230/330/333	+ 35	+ 44	+ 33
124.290/393		–	+ 39
201	+ 42	+ 46	+ 35

Suspension for increased payload (SA 11152)

124	+ 28	–	+ 20

Sports chassis

124.019/02/03/04/05/12/13	+ 2	+ 2	–5
124.07/08/09/18/19		–	+ 3
124.06	–5	–1	–11
124.034		+ 3	+ 2
201	+ 2	+ 5	–5

Checking and adjusting vehicle level with level control on front and rear axle [1]

Model	Front axle Ready-to-drive [2] and laden mm	Rear axle Ready-to-drive [2] and laden mm	Position of level adjustment switch
201.034/035 (Optional equipment)	–15 ± 10	–12 ± 10	Switch toggle in center position Normal level (control point)
201.036 (Production)	–35 ± 10	–22 ± 10	
201.034/035 (Optional equipment) 201.036 (Production)	Level reduction by approx. 15 mm [2]		Switch toggle downwards
	Level increase by approx. 30 mm [2]		Switch toggle upwards

[1] Ready-to-drive, refer to general information on chassis alignment (40-0200).

[2] The visual inspection of the change in length of the control rods suffices as a function check when engine is running (approx. 1500 rpm) after operating the level adjustment switch.

B. Control point of level control

Model **Basic version**	**Rear axle** Laden (control point) in mm Tolerance ± 10 mm
124.003/104/105/127/129/2/3	+ 5
124.004/106/107	+ 15
124.007/027	+ 8
124.008/029	+ 18
124.079/08/09/18/19	- 5
up to 10/88 124.02/03/04/05/06/12/13	
up to 10/88 201	
as of 11/88 124.019/02/03/04/05/06/12/13	- 14
as of 11/88 201	
124.036	- 27

Suspension for increased ground clearance (stiff suspension SA 10881)

124 201	+ 10

Suspension for increased payload SA 11152

124	- 5

Sports chassis

124 201	- 25

C. Front axle wheel alignment

Model **Basic version**	Camber [1] (Toe-in 0°) Tol. $^{+10'}_{-20'}$	Caster [1] (Toe-in 0°) Tol. ± 30'	With wheels turned	Toe-in [1] Tol. ± 10'	Toe-out on turns ∢ [2] Tol. ± 30'	Ball point position in mm Tol. ± 2
as of 10/88 124.020/021/023/026/ 03/04/05/120/125/ 128/13	– 0° 05'	10° 10'	9° 55'	0° 20'	– 0° 55'	27.5
up to 11/88 124.01/020/021/022/023/ 026/028/030/031/032/ 04/05/120/125/128/13	– 0° 25'	10° 25'	10° 05'		– 1° 05' [3]	
124.003/104/105	– 0° 05'	10° 10'	9° 55'		– 1° 10' [3]	
124.027/029/127/129	0° 10'	10° 5'	9° 50'		– 1° 20' [3]	
124.06	– 0° 40'	10° 30'	10° 15'		– 1°	
124.004/007/008/106/107	0° 25'	10°	9° 45'		– 1° 20' [3]	
124.07/08/09/18/19	– 0° 05'	10° 10'	9° 55'		– 1° 10' [3]	
124.034	– 0° 40'	10° 30'	10° 15'		– 1° 30'	26.5 [4] 23.5 [5]
124.036	– 1°	10° 50'	10° 30'		– 0°55'	
124.2/3	– 0° 35'	10° 20'	10° 05'	0° $^{+5'}_{-10'}$	– 0° 50'	28.5
as of 10/88 201.01/02/12	0°	10° 10'	9° 55'	0° 20'	– 0° 35'	30
up to 10/88 201.01/02/12	– 0° 25'	10° 25'	10° 05'		– 0°45'	
201.034/035		10° 30'	10° 10'		– 0°40'	
201.036	– 1° 35'	11° 20'	10° 55'		– 0° 20'	

[1] Tolerances only for checking. Aim for specified value during adjustment. Permissible difference between left and right 0°20' camber, 0°30' caster.
[2] Value specification without toe-in.
[3] On vehicles up to 06/89 (prior to introduction of modified drag link), the toe-out on turns is smaller by 15'.
[4] Measuring point: on pitman arm.
[5] Measuring point: on idler arm.

Model	Camber [1] (Toe-in 0°) Tol. $^{+10'}_{-20'}$	Caster [1] (Toe-in 0°) Tol. ± 30'	With wheels turned	Toe-in [1] Tol. ± 10'	Toe-out on turns ∡ [2] Tol. ± 30'	Ball point position in mm Tol. ± 2
Level control with level adjustment at front and rear axles						
201.03	– 1°	10° 55'	10° 30'	0° 20'	– 0° 30'	30
Suspension for increased payload (Special equipment 11152)						
124	– 0° 05'	10° 10'	9° 55'	0° 20'	–1° 10' [3]	27.5
Suspension for increased ground clearance (stiff suspension, Special equipment 10881)						
124.01/02/03/07/08/09/ 12/13/18/19	0° 20'	10°	9° 45'	0° 20'	– 1° 20' [3]	27.5
124.2/3	– 0° 30'	10° 15'	10°	0° $^{+5'}_{-10'}$	– 0° 50'	28.5
201	0 ° 20'	10°	9° 45'	0° 20'	– 0° 55'	30
Sports chassis						
124.01/02/030/031/032/ 04/05/07/08/09/12/13 18/19	– 0° 45'	10° 40'	10° 20'	0° 20'	– 0° 55'	27.5
124.034	– 0° 55'	10° 45 '	10° 25'			26.5 [4] 23.5 [5]
124.06						27.5
201	– 0° 50'	10° 40'	10° 20'		– 0° 35'	30

[1] Tolerances only for checking. Aim for specified value during adjustment. Permissible difference between left and right 0°20' camber, 0°30' caster.
[2] Value specification without toe-in.
[3] On vehicles up to 06/89 (prior to introduction of modified drag link), the toe-out on turns is smaller by 15'.
[4] Measuring point: on pitman arm.
[5] Measuring point: on idler arm.

D. Rear axle wheel alignment

Toe-in values (ready-to-drive)

Model	Total toe-in (level ready-to-drive)
124, 201	0° 25' $^{+10'}_{-05'}$

Camber values at vehicle level

Models 124, 201 Vehicle level in mm	Camber at level in mm, tolerance ± 30'
+ 50	–0° 15'
+ 40	–0° 30'
+ 30	–0° 45'
+ 20	–1°
+ 10	–1° 15'
0	–1° 30'
–10	–1° 45'
–20	–2°
–30	–2° 15'

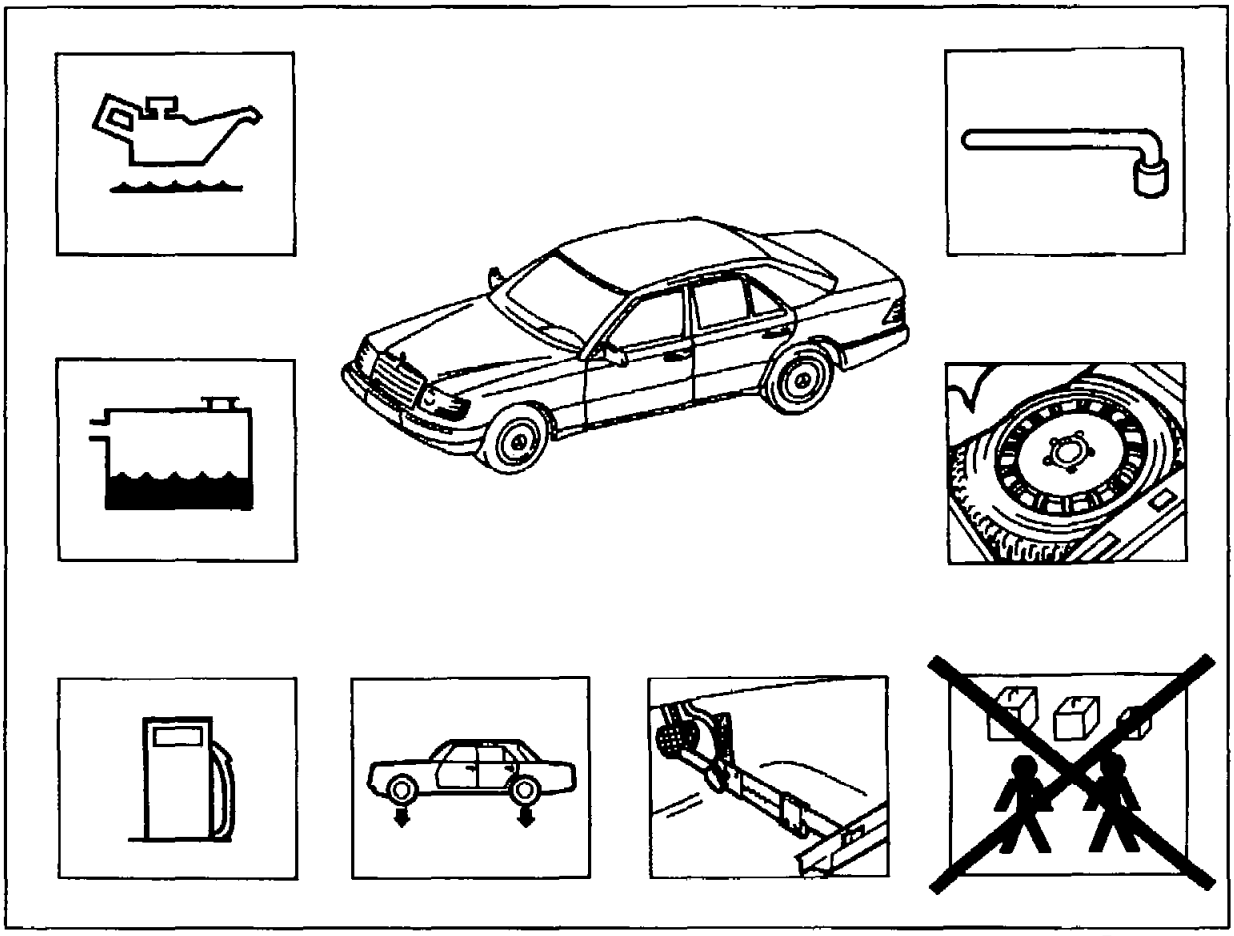

P40-5066-57

Prerequisites for checking . . . . . Vehicle in "**ready-to-drive**" condition:

- Operational vehicle filled with oil and coolant.
- Fuel tank full, compensate for missing fuel with appropriate additional weight in trunk.
- Spare tire and tools in vehicle.
- Vehicle unladen. Removal of luggage, fuel can or similar from vehicle.

Tire pressure	Check, correct if necessary.
Tires/disk wheels	Check wear pattern, tread depth and damage.
Visual inspection of vehicle underbody	For damage, corrosion of chassis and supporting parts of the body. Leaks at units and lines.
Wheel bearing play	Check (without dial gauge).
Play in steering components	Check (46-0110).
Pedal winch	Install part no. 000 589 18 31 00 on brake pedal.
Data sheet for chassis alignment	Use/fill out order no. B20.800.98.230.00.B-00/0291.

Special tools

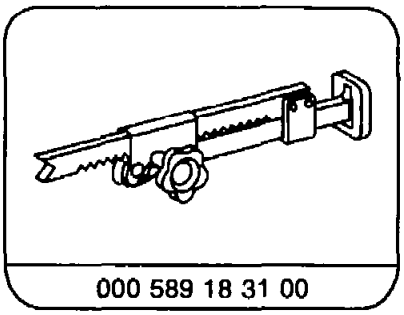

000 589 18 31 00

40–0300 Checking and adjusting vehicle level at front and rear axles

Preceding work
General information on chassis alignment (40–0200).

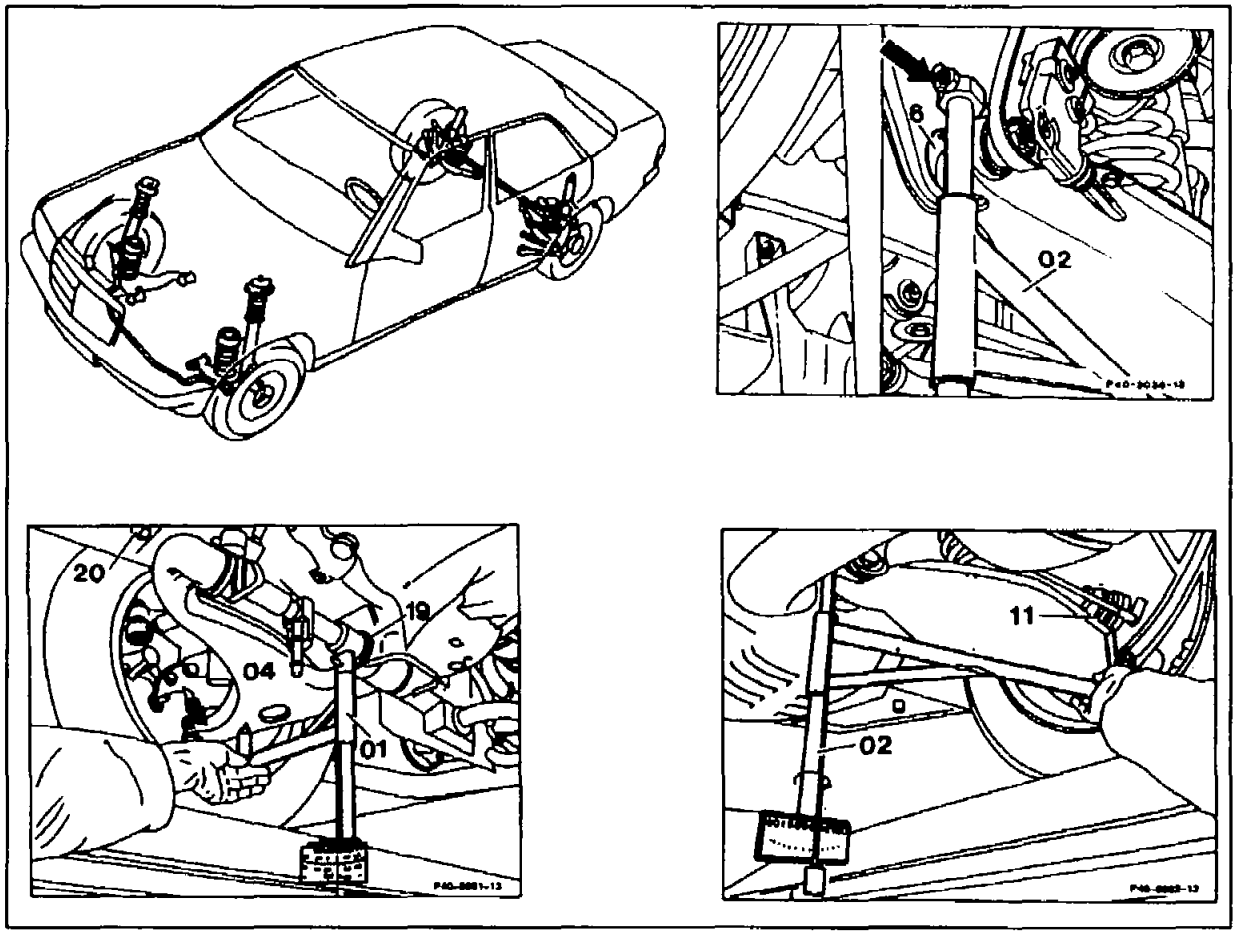

P40-5068-57

⚠
If the vehicle has been lifted, or repair work has been carried out on the axles or the suspension, the vehicle must be forcefully bounced several times prior to measurement.

Vehicle level at **front axle**	. . . . .	Check with measuring unit (01) 201 589 00 21 00 (refer to test and adjustment values 40-0001). • Position measuring unit between front and rear eccentric bolts on wishbone bearings. • Position contact arm of measuring unit (01) against wishbone and read off plumb value for vehicle level on instrument scale.

Vehicle level **rear axle**	Check with measuring unit (02) 201 589 01 21 00. • Place pivot arm of measuring unit on the spring link of the inner mount (arrow). For this purpose, the bracket for the wear indicator must be detached on vehicles with ASR. • Position contact arm on the rear axle shaft and read off the plumb value of the vehicle level.
Adjustment of vehicle level by:	a) **Height of rubber mount** change of the rubber mounts by 5 mm results in a change in vehicle level of approx. 9 mm (refer to note). b) **Assignment of spring/rubber mount** If the adjustment cannot be carried out with rubber mounts, the assignment of the front springs and rubber mounts must be re-established (refer to parts microfiche). ⚠ **On vehicles with level control** do **not** correct a vehicle level which is too low by changing connecting rod of the level controller (control point), but: 1. Check level control for proper function 2. If point 1 is in order, adjust vehicle level by changing springs or spring/rubber mounts (32-0530).
After changing the vehicle level	Adjust headlamps (82-0040).

Special tools

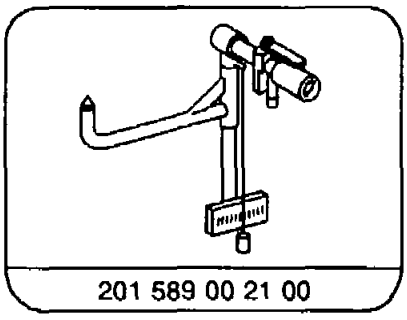

201 589 00 21 00

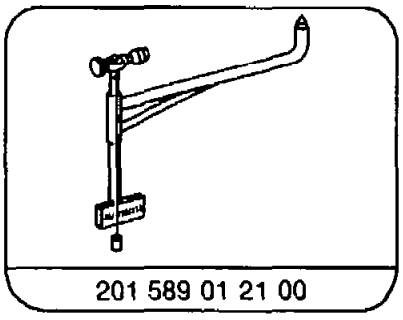

201 589 01 21 00

When evaluating the vehicle level, always check the vehicle level at the front and rear axles. The maximum permissible difference between the vehicle level on the left- and right-hand sides of the vehicle is:

- using the measuring unit approx. 9 mm
- using a tape measure approx. 15 mm

(from center of wheel to fender cutout).

Note

Rubber mounts of different height are available.

Height "a" (mm)	Number of lugs
8	1
13	2
18	3
23 (front axle only)	4

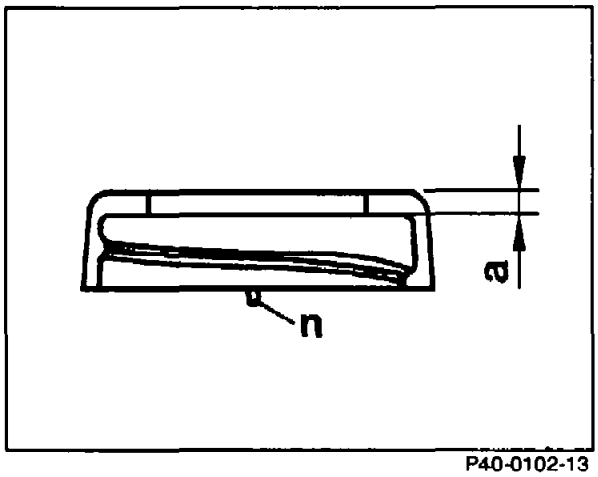

P40-0102-13

40–0302 Checking and adjusting vehicle level on vehicles equipped with level control on front and rear axles (model 201.03)

Preceding work
General information on vehicle alignment (40-0200).

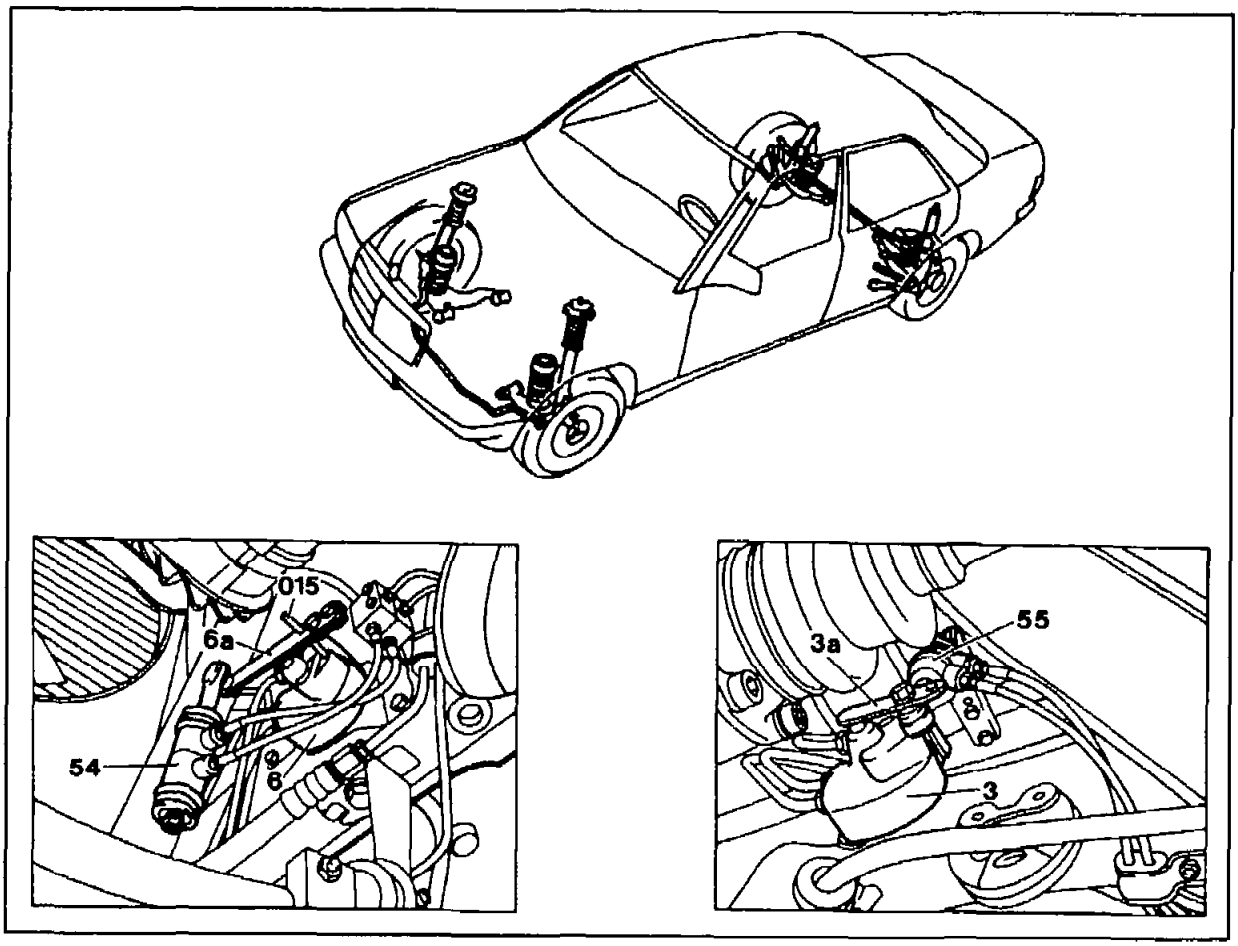

P40-5070-57

Oil level	Check and, if necessary, correct in oil reservoir of level control.
Level control switch	In basic position (indicator lamp **off**).
Vehicle level	Check with measuring unit 201 589 00 21 00 on front axle and with measuring unit 201 589 01 21 00 on rear axle.
Adjustment of vehicle level by	Adjustment of control rod on front and rear axle. The vehicle must be on the roller plates (measuring system).

	Note The springs only have a partially supporting function. The vehicle level is determined by the control point of the level controller. If the vehicle level is found to be defective, the level control is also to be checked, if necessary (32-0537).
Control rod for front axle	Unscrew at level controller (6).
Control rod for rear axle	Unscrew at level controller (3)
Engine	Allow to idle.
Vehicle level at the front and rear axle	Adjust with the level controller lever for front axle (6a) and rear axle (3a) until the specified adjustment values are indicated on the measuring unit scale Always adjust vehicle level from lower position upwards.
Level controller lever	For front axle and rear axle, arrest in center position (hole "a") with a 4 mm dia. pin (015).
Engine	Shut off.
Control rods (54, 55)	Adjust to resulting length and mount on level controller lever (hole "c") without tension. Check swivel range of control rods. Remove pin (015).
Headlamp adjustment	Check, correct if necessary (82-0040).

Special tools

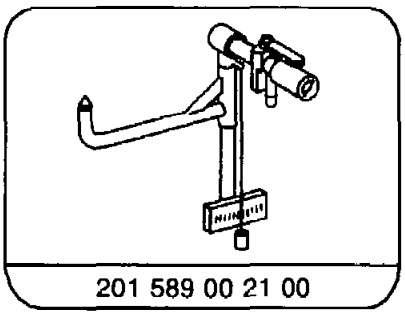

201 589 00 21 00

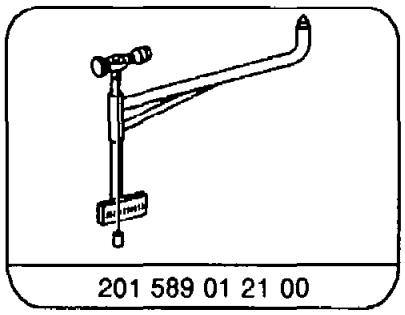

201 589 01 21 00

40–0310 Checking and adjusting control point of level control

Preceding work:
Checking and adjusting vehicle level at front and rear axles (40-0300).

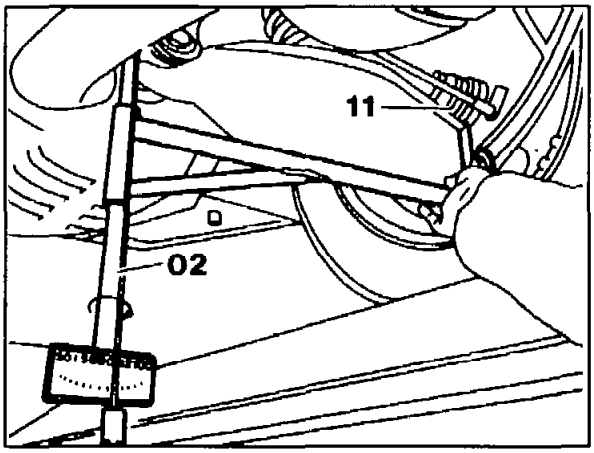

P40-5062-13

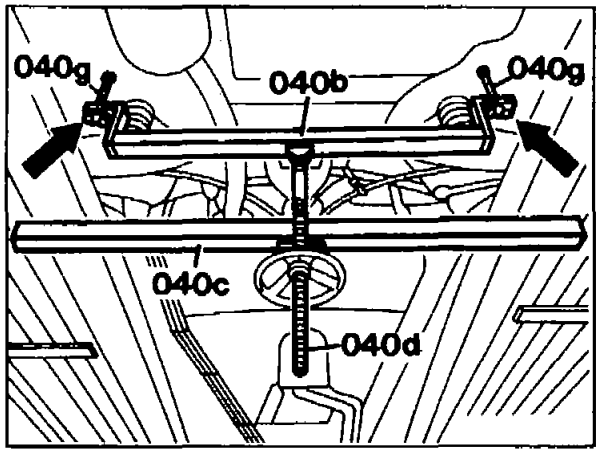

P40-5217-13A

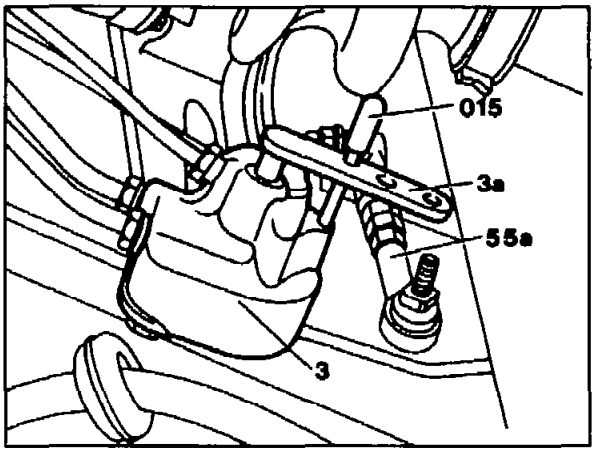

P40-5060-13

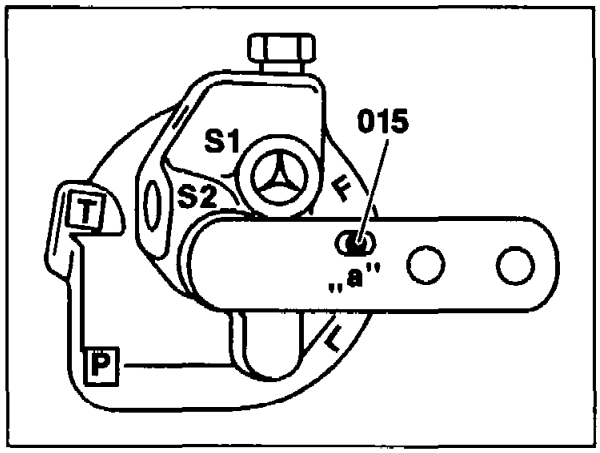

P32-2344-13C

Oil level ..... Check and, if necessary, correct in oil reservoir of level control.

Level measuring instrument (02)
201 589 01 21 00 ..... Position at inner pivot point of spring link and measure control point with contact arm at rear axle shaft.

Vehicle rear end ..... Pull down to the specified control point (simulate load condition). For this purpose, hook pulling device (040b) with the mounting pins (040g) into the rear mount of the rear axle carrier on the frame floor and lock (arrows).

4 mm adjusting pin (015)	Insert into hole "a" in level controller adjusting lever. If adjustment is **correct**, the adjusting pin can be inserted into the locating hole in the level controller.
Connecting rod (55)	Correct if adjustment is **not** correct. For this purpose loosen both lock nuts, and shorten or lengthen the connecting rod with the adjusting screw until the lever of the level controller (3a) can be located with the 4 mm adjusting pin on the level controller (hole "a").
4 mm adjusting pin on level controller	Pull out.
Vehicle rear end	Relieve of load.
Headlamp adjustment	Check, correct if necessary (82-0040).

Special tools

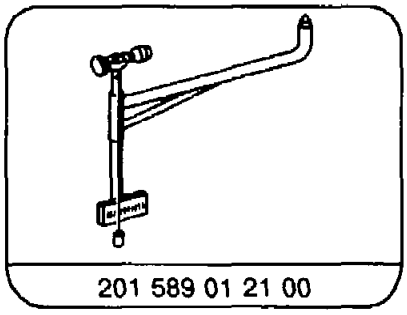

201 589 01 21 00

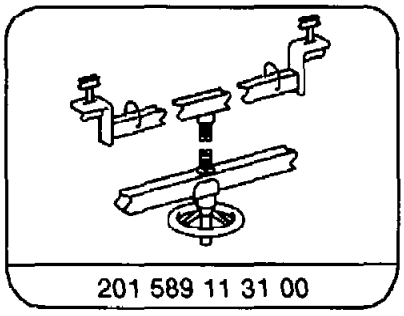

201 589 11 31 00

40–0321 Checking and adjusting ball point position

Preceding work:
General information on chassis alignment (40-0200).

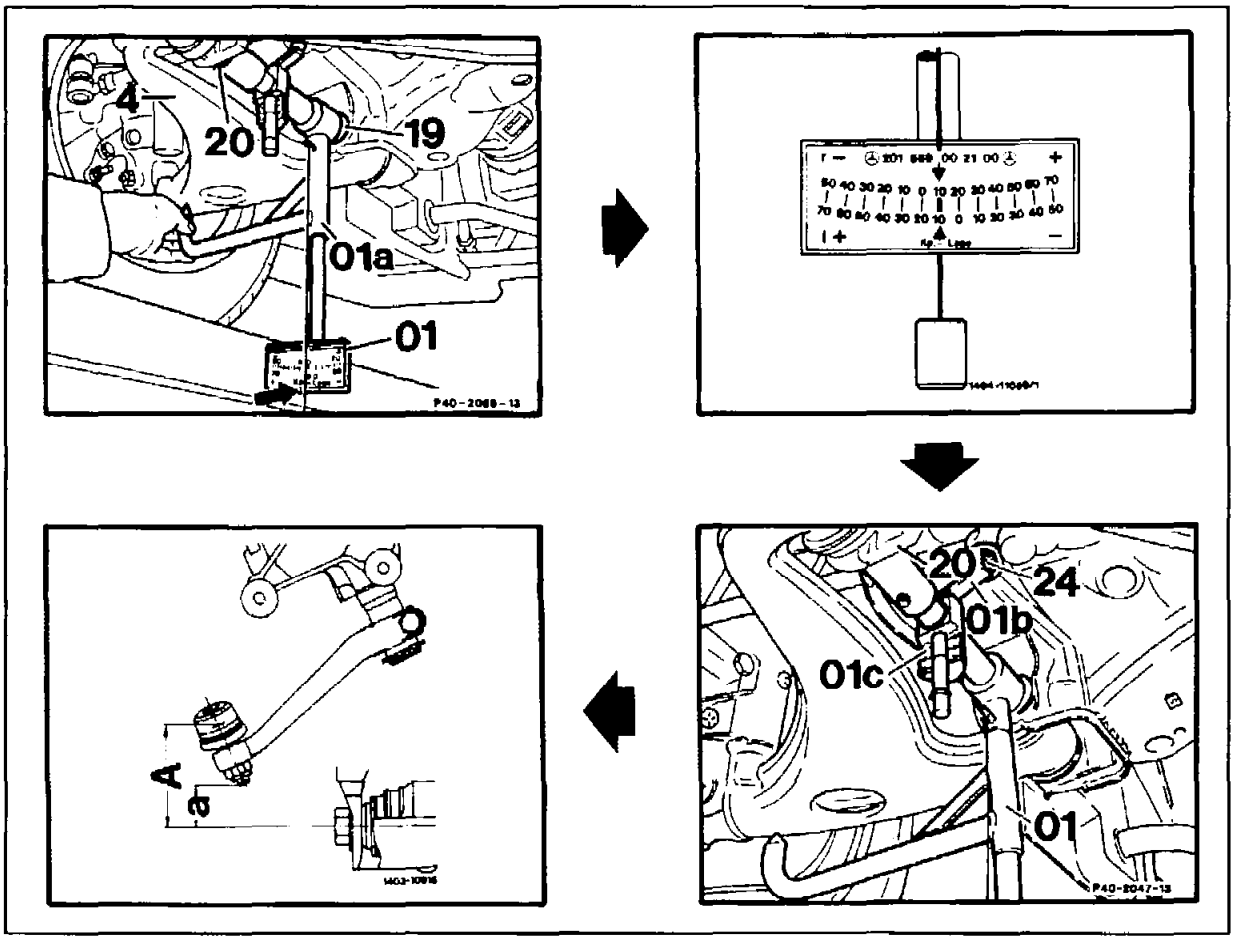

P40-0085-57

Measuring instrument (01) 201 589 00 21 00 . . . Insert in the wishbone bolted connection and position so that the plumb bob (arrow) is at "0" on scale.

Ball point position . . . . . In the straight-ahead position of the front wheels scan with the slide (01b) on the track rod (24, thread shoulder).

Difference in height "A" = ball point position. The ball point position is not measured directly but via dimension "a"

Correction of ball point position . . . . . Perform at idler arm or in exceptional cases at pitman arm.
If the ball point position cannot be adjusted, check bearing console of idler arm (62-185).

Special tool

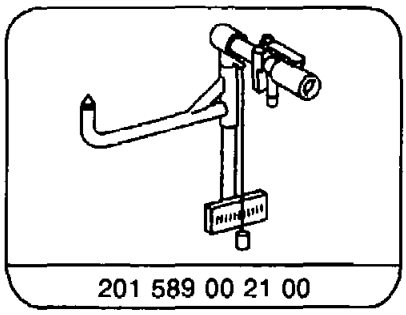

201 589 00 21 00

Note

The ball point position can be adjusted at the idler arm (26) by inserting an additional washer or by removing the washer (26a).

Tightening torque of hexagon nut (26b):

Model 124	150 Nm
Model 201	110 Nm

After tightening the hexagon nut (26b), check whether the thread of the hexagon bolt projects at least 0.5 mm beyond the hexagon nut.

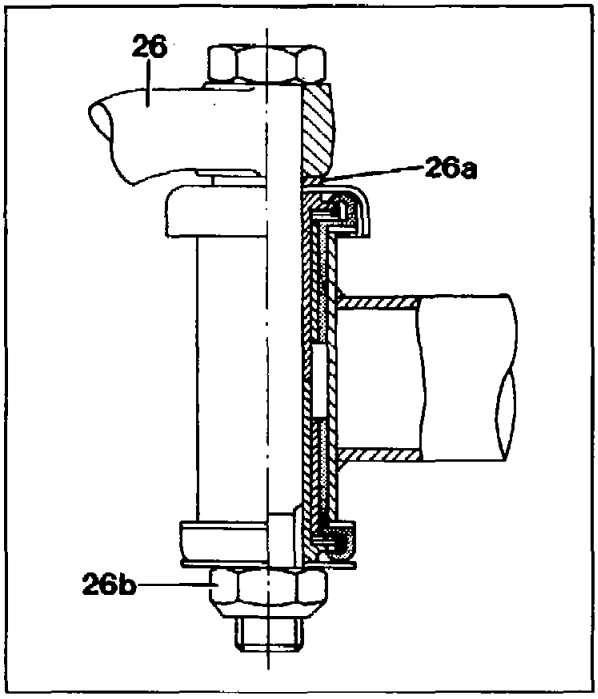

P46-5355-15A

In exceptional cases, the ball point position can be corrected at the pitman arm by shifting the arm on the splines of the pitman shaft.

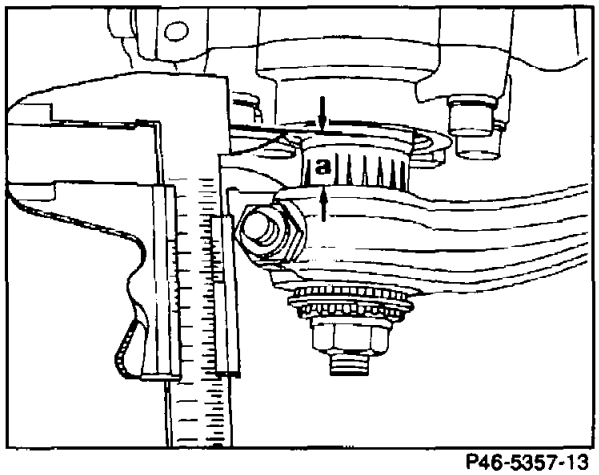

P46-5357-13

40–0322 Checking and adjusting camber and caster at front axle

Preceding work:
General information on chassis alignment (40-0200).
Checking and adjusting vehicle level at front and rear axles (40-0300).

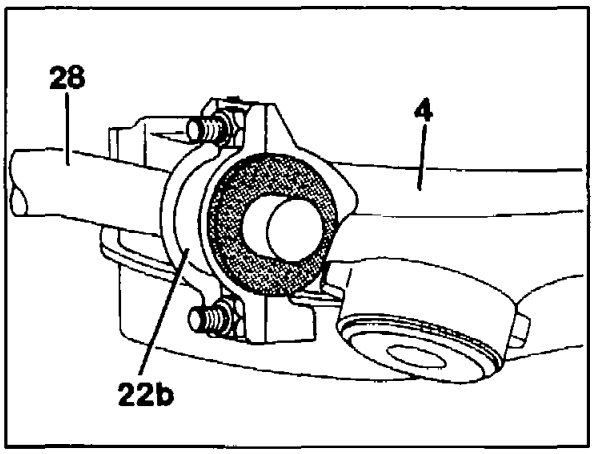

P40-5219-13A

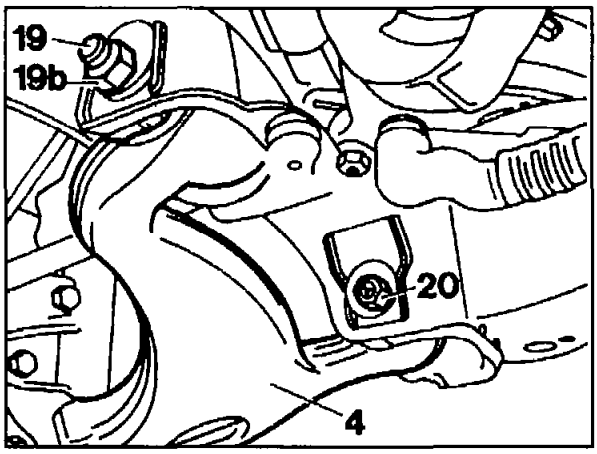

P33-5118-13

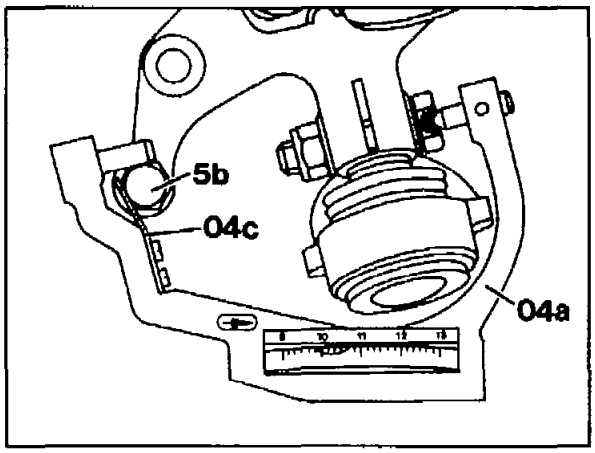

P40-5382-13

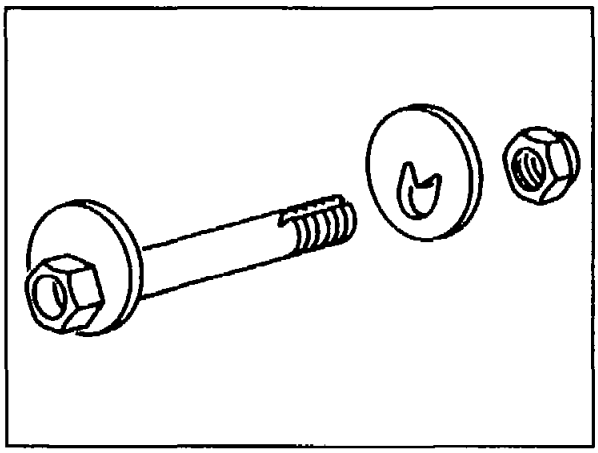

P40-0108-13

Camber and caster	Check in the ready-to-drive condition.
Brackets (22b)	Loosen completely on the wishbones (4), tighten. Tightening torque 20 Nm.
Measuring device (04a) 201 589 02 21 00 for caster	Insert in the locating points on the steering knuckle.
Camber (front eccentric bolt, 20) and caster (rear eccentric bolt, 19)	Adjust on wishbone mount by turning the eccentric bolt. Tightening torque of nut on eccentric bolt, 120 Nm.

Special tool

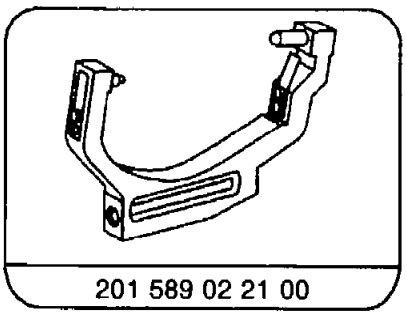

201 589 02 21 00

Note

- If it is not possible to adjust the camber to the specified value, perform the following work:
  Check vehicle level, correct if necessary (40-0300). A change in the vehicle level by 10 mm results in a change in the camber of approx. 0°15'.
  Check wishbone and steering knuckle for any damage.
  Check supporting joints and control joints for wear.
- When adjusting the camber and caster ensure that the wheel spreader for adjustment of the toe-in is **not** inserted.
- The front wheels should always be in the straight-ahead position (zero toe-in) for measuring and adjusting the camber and caster.

40–0323 Checking and adjusting toe-in at front axle

Preceding work:
General information on chassis alignment (40-0200).

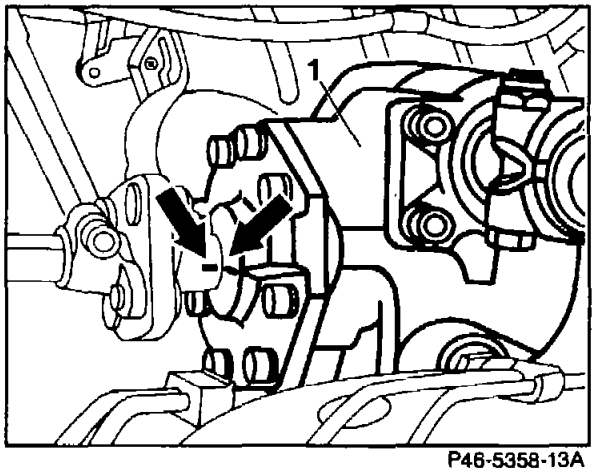

P46-5358-13A

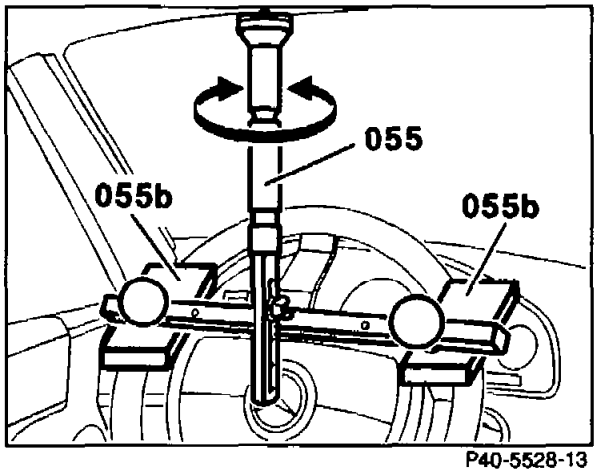

P40-5528-13

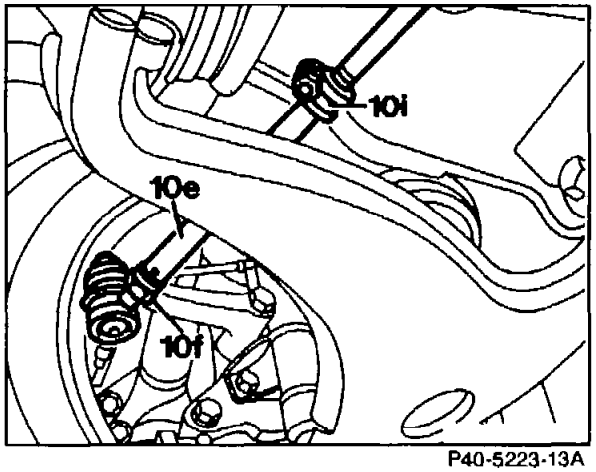

P40-5223-13A

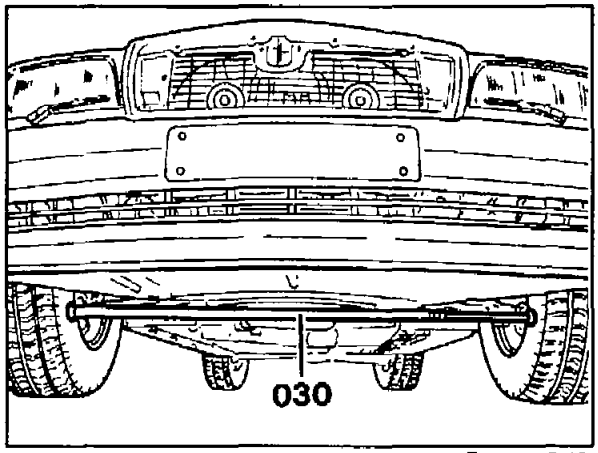

P40-5022-13

Steering gear and steering wheel	Check at center position, correct if necessary. **Note** Observe center position versions.
Steering wheel	Arrest in center position with adjusting tool (055) 129 589 01 21 00. Use pads in the case of soft foam steering wheels (055b).
Wheel spreader (030)	Install on inside of wheels towards front of vehicle.

Toe-in	Adjust at the track rods (10) Adjust from the + direction.
	Tightening torques:
	Clamp Model 124 20 Nm
	Clamp Model 201 10 Nm
	Tapered clamping ring Model 124 50 Nm
	Tapered clamping ring Model 201 30 Nm
	Recheck the swivel range of track rods of approx. 45° ± 5°.
After completing the adjustment work	Remove wheel spreader and steering wheel adjustment tool.

Special tools

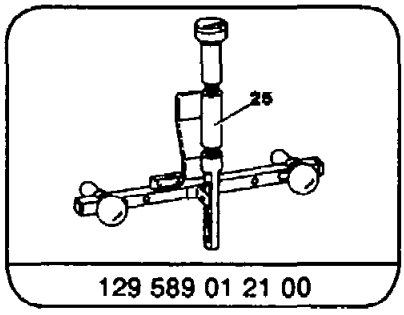

129 589 01 21 00

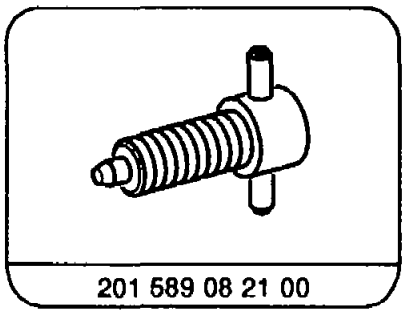

201 589 08 21 00

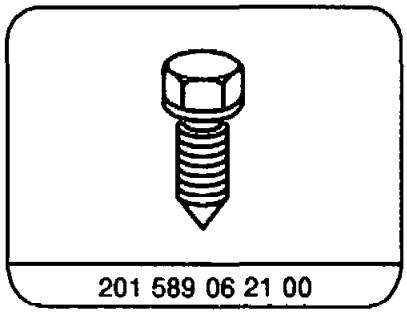

201 589 06 21 00

Shop-made tool
In order to avoid pressure marks on steering wheels with soft foam base, produce pad and put underneath.

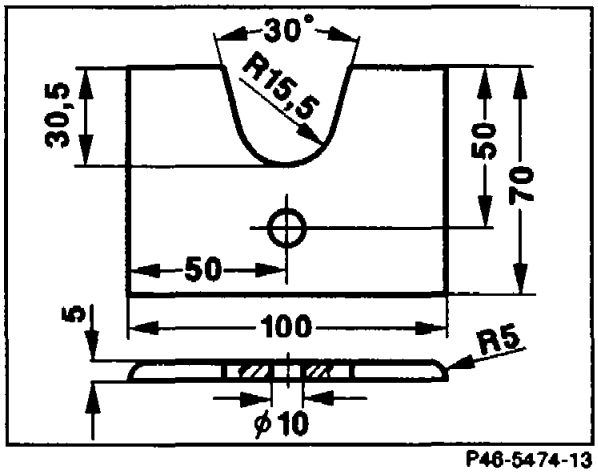

P46-5474-13

Commercially available tools or testers, MB testers (refer to Workshop Equipment Manual)

Designation	e.g. Company, order no.
Wheel spreader	Beissbarth Order no. 860 000 883

Note

Observe center position versions.

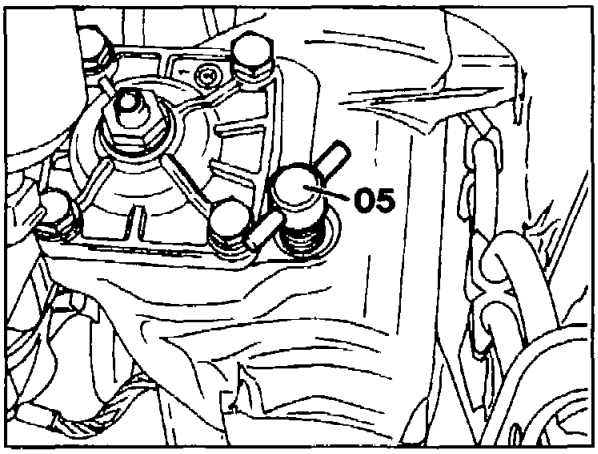

P46-2502-13

Model 201 with mechanical steering gear

Screw in center position check bolt (05) 201 589 08 21 00.

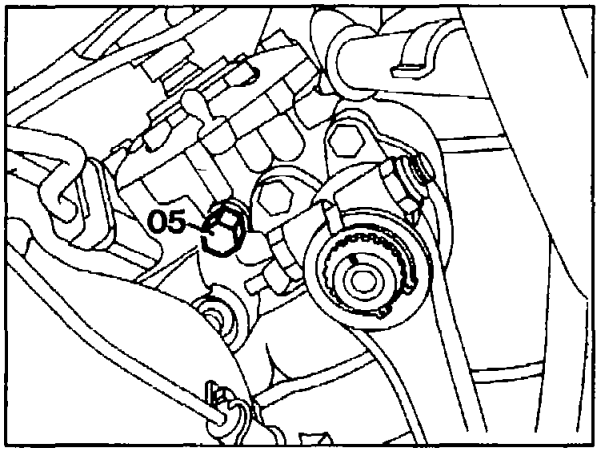

P46-5359-13A

Models 124 and 201 with power steering gear up to 02/90

Screw in center position check bolt (05) 201 589 06 21 00

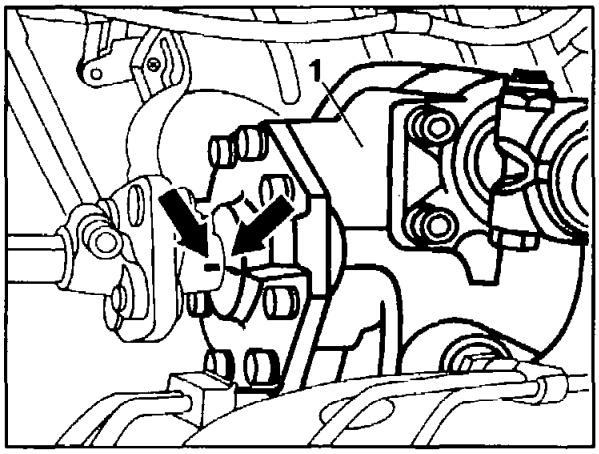

P46-5358-13A

Models 124 (except for model 124.034/036), 201

Steering gear external centering marking lines (arrow) aligned as of 02/90.

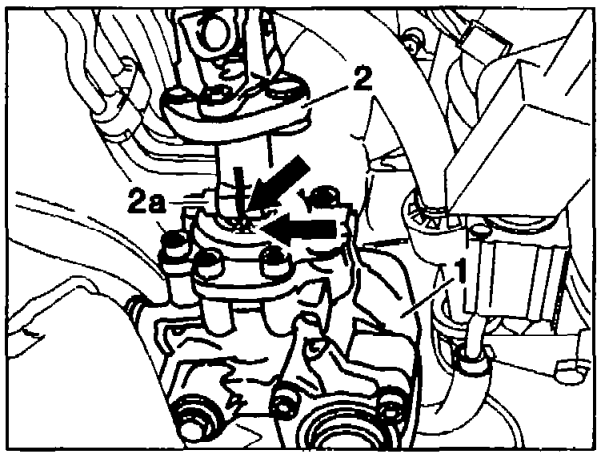

P46-2609-13

Model 124.034/036

The center position is reached when the separation joint of the steering coupling aligns with the marking notch on the steering gear (arrow).

40–0325 Checking toe-out on turns

Preceding work:
General information on chassis alignment (40-0200).
Attachment of Mercedes-Benz quick-clamp holder (40-0230).

The toe-out on turns can be measured to check the steering geometry. This is the difference in the angles at which the wheel on the inside and the outside of the curve are turned with the wheel on the inside of the curve turned 20°. This assumes that the toe-in is distributed equally between the two wheels with the wheels in the straight-ahead position.

When the toe-out on turns is measured optically the toe-in value included in the reading must be taken into consideration when calculating the actual toe-out on turns, because the values specified in the data assume that both wheels are in the straight-ahead position without toe-in.

Example:

Toe-in adjustment: = +0°20'

Toe-out on turns measured on wheel on outside of curve with wheel on inside of curve turned to an angle of 20° = -1°20'

Corresponds to actual toe-out on turns without toe-in of = -1°

When the toe-out on turns is measured with the aid of the rotating supports (e.g made by Beissbarth), the actual toe-out on turns can be read off directly, because the scales on the rotating supports are set to the straight-ahead position, i.e. to 0°, before measuring.

Slight deviations from the specified value have no effect on the handling characteristics or tire wear. Major deviations take the form of tire wear pattern such as incorrect toe-in.

Greater differences may be caused by the following, assuming that the caster and camber are correctly adjusted:

1. Toe-in not adjusted with the steering gear in the straight-ahead position resulting in unequal length track rods.
2. Incorrect pitman arm, idler arm or steering knuckle arm installed.
3. Pitman arm mounted incorrectly on pitman arm shaft.
4. Steering knuckle arm, pitman arm or idler arm bent.
5. On vehicles involved in accidents, excessive deviations at the front end (frame side members, frame cross members, wheelhouse and firewall) can impair the adjustment range for camber and caster, resulting in large differences in toe-out on turns between the left and right.

40–0331 Checking camber at rear axle

Preceding work:
Checking and adjusting vehicle level at front and rear axles (40-0300).

The rear axle camber results from the vehicle level whereby a corresponding rear wheel camber is assigned to a particular vehicle level (see values for wheel alignment at rear axle).

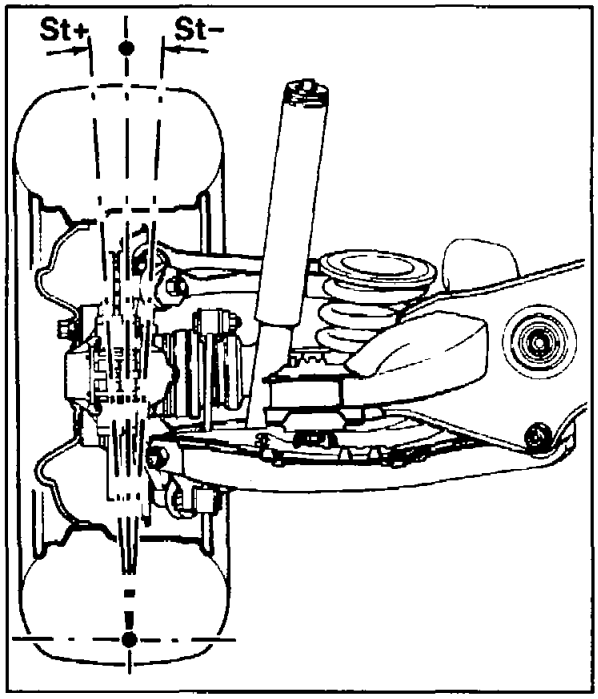

P40-5014-15

St + = Positive camber
St – = Negative camber

Excessive deviations in the rear wheel camber can result from the following causes :

- Difference in level between left and right side of vehicle is too high.
- Camber strut bent.
- Accident damage to frame floor. Differences in level of mounting points for rear axle carrier between left and right side of body.

40–0332 Checking and adjusting toe-in at rear axle

Preceding work:
Checking and adjusting vehicle level at front and rear axles (40-0300).

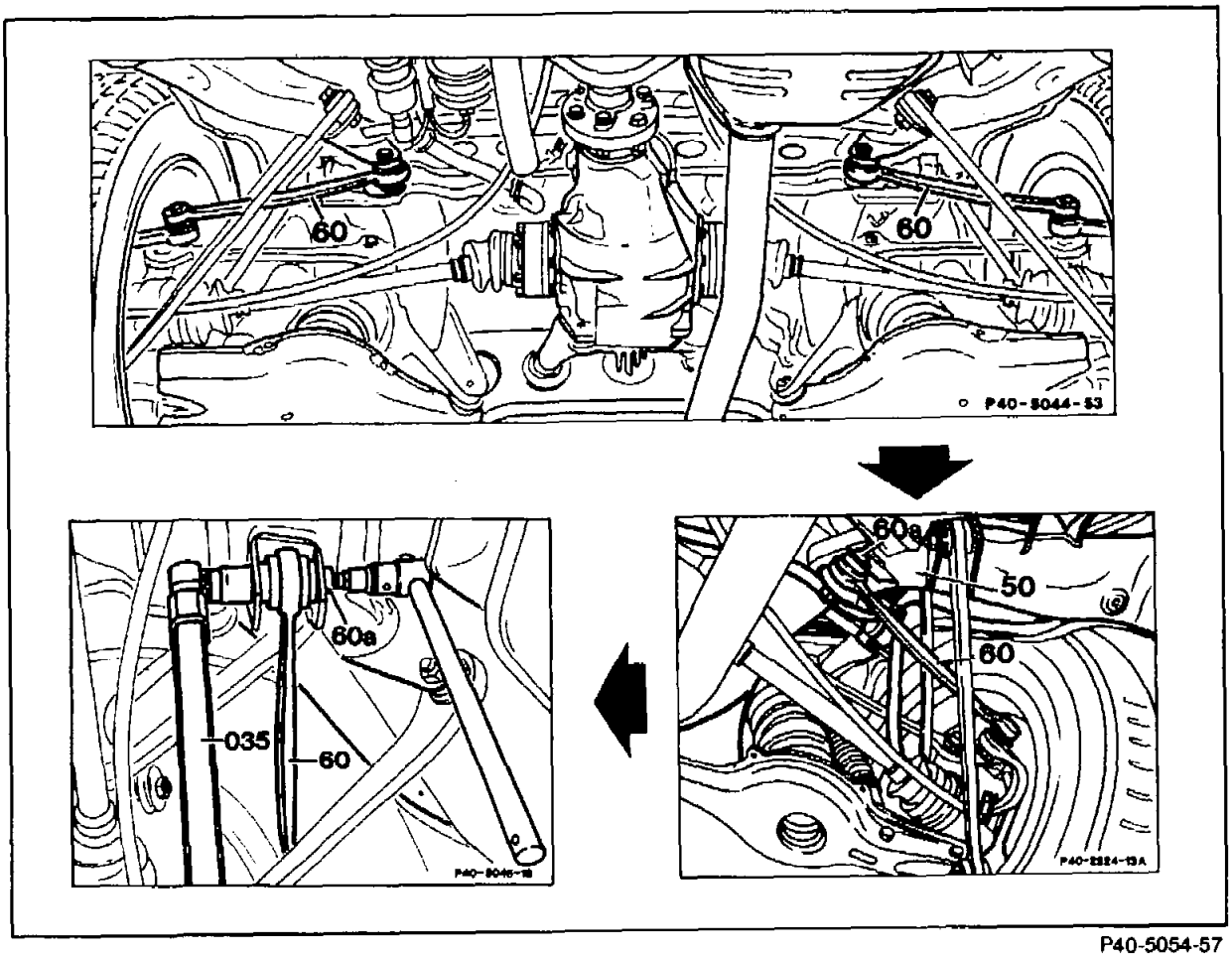

P40-5054-57

Toe-in . . . . . .

Always adjust toe-in starting at maximum possible toe-out to specified toe-in value and distribute evenly between the two wheels. The toe-in can be adjusted with the eccentric bolt (60a) on the mount for the right and left track rod (60) on the rear axle carrier (50).
Tightening torque 70 Nm.

A1 AR40.10-P-1025A	Checking tires for lateral and radial runout

MODEL all

	Measure the lateral and radial tire runout on a balancing machine with fixed concentricity measuring device	
	Measurement	
1	Measure tire lateral runout (permissible runout max. 1.5 mm) at center level of the tire flank	Select the measuring point so t roller does not run over the tir designations or the protective
2	Measure tire radial runout in the center of the tire tread (permissible radial runout max. 1.0 mm)	
3	Eliminate radial runout	

Commercially available tools (refer to Workshop Equipment Manual)

Number	Designation	Com
WH58.30-Z-1001-18A	Concentricity measuring device for wheels and tires for attachment to the wheel balancing machine	Hofm D-64

B1	AR40.10-P-1030A	Replacing tires

MODEL all

43a Balance weight
43g Rubber valve

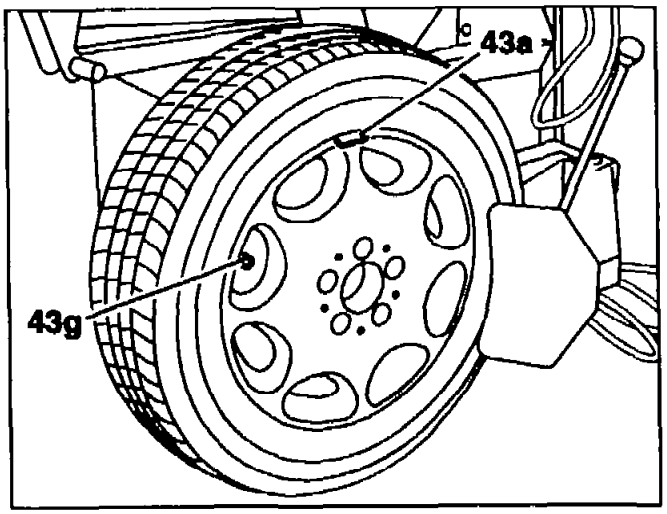

P40.10-0217-01

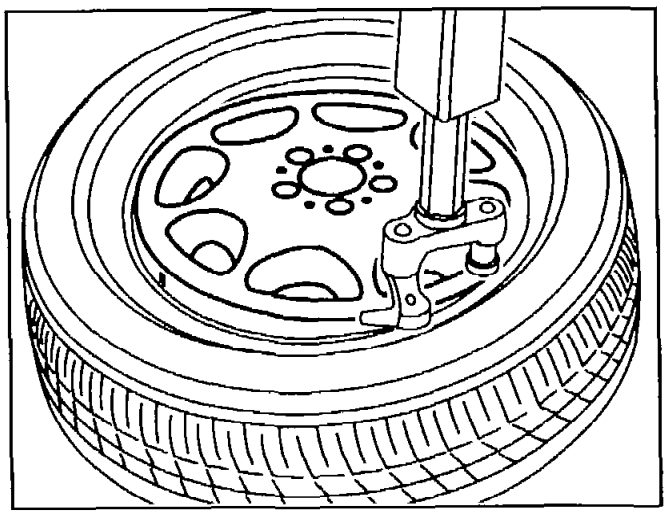

P40.10-0219-01

	Removing	
1	Comply with information on tires/disc wheels	
2	Unscrew valve insert from rubber valve (43g), remove any balance weights (43a)	
2.1	Drain sealant out of tires which have been filled with TIREFIT sealant	**Model 170** The spare wheel with folding t available as an assembly. The s with folding tire can only be re completely. If a spare wheel is damaged, di folding tire and dispose of it se from the disc wheel.
3	Mount pressing-off blade of tire fitting unit on the tire bead opposite the rubber valve (43g)	It must not be pressed against but only against the bead flan the carcass will be damaged
4	Press inside and outside of tire over the safety shoulder of the disc wheel	

5	Clamp disc wheel onto the tire fitting unit. Moisten flange and tire bead with soapy water. Align assembly head (see illustration).	Only use soapy water for fittin removing tires
6	Place rubber valve (43g) 10 cm behind the assembly head	
7	Lever tire bead with a tire iron over the assembly lug and pull off the tire	
8	Check condition of disc wheel	
	Fitting	
9	Replace rubber valve (43g)	
10	Place tire obliquely on the disc wheel and pull on over the rim flange using the tire fitting unit	Load bead section as little as p Comply with direction of rotat case of tires which have a direc rotation
11	Align match points of tire and disc wheel, remove disc wheel with tire from tire fitting unit	
12	Pump up tires without valve insert to max. 3 bar	The tire must slip evenly over t shoulder of the disc wheel, oth the tire bead again with soap s

13	Screw in valve insert and correct tire inflation pressure to the specified value (refer to tank flap)	
14	Balance wheel	

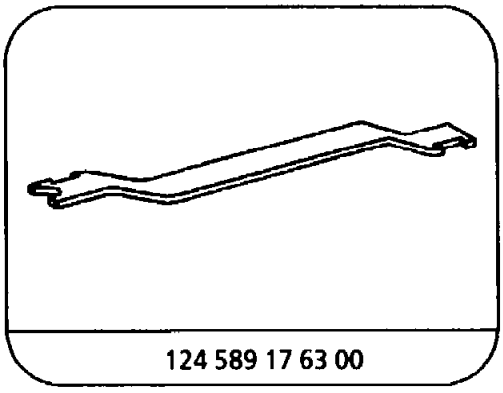

124 589 17 63 00

Assembly tool

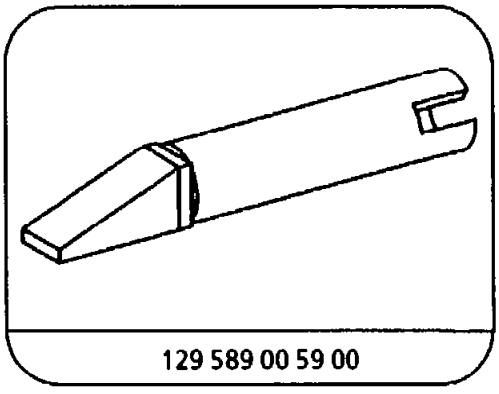

129 589 00 59 00

Lifter

Inspecting drive shaft flexible coupling

4152

All models

Note: When performing this job number, the engine compartment lower panel or the noise encapsulation panel must be removed on models 124.1/3 and 201.1, and replaced after completing all maintenance work (refer to job number 6190 or 9490).

- Check flexible coupling for wear and damage, as well as for distortion (visual inspection).

- On those flexible coupling mounted at the transmission end, that are radially soft (soft in thrust) and tangentially soft (soft in thrust and tension), check the lands in the area of the dowel sleeves (arrows) for cracks (visual inspection).

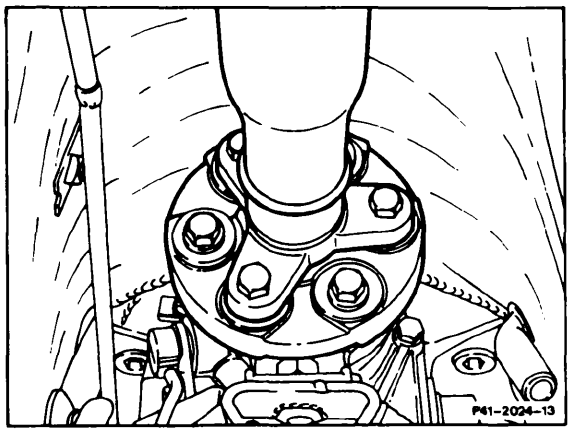

Model 107, 123, 126.03/04
Model 123 1st version through 09.1980 on vehicles with 6 cylinder engine

- Replace flexible coupling if damaged or worn.

- If distortion is found, loosen and retighten drive shaft. If distortion remains, replace flexible coupling.

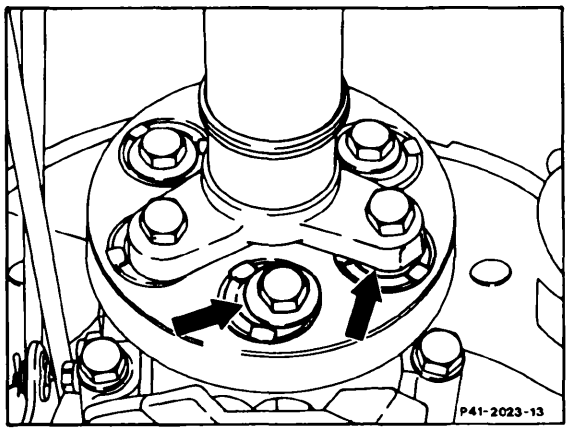

Model 126.02 with radially softer flexible coupling (transmission end only)
Model 123 2nd version starting 10.1980 on vehicle with 6 cylinder engine

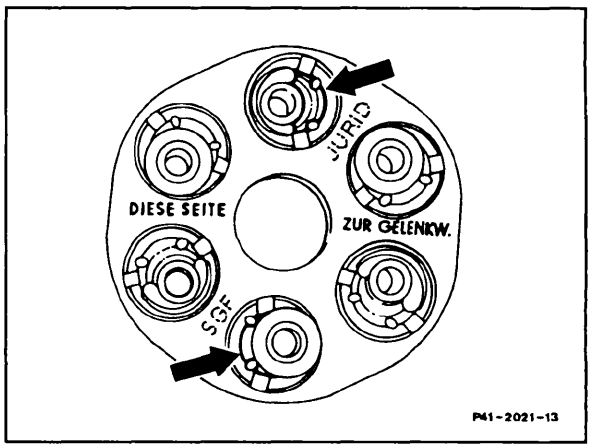

Tangentially softer flexible coupling, front and rear, on model 123 with 5-speed manual transmission
Starting 10.1985 model 126.02 at transmission end only

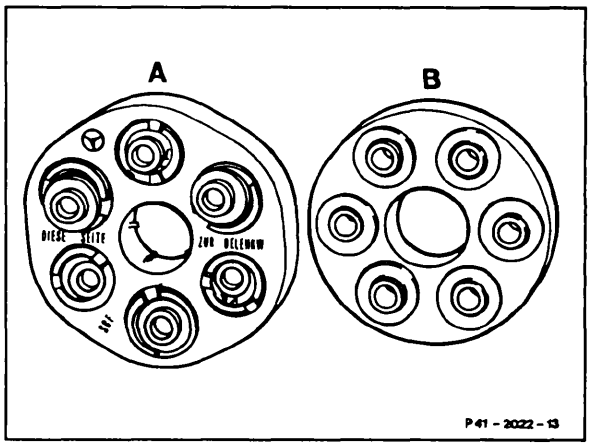

Models 107, 124, 129, 201

A Model 124, 201.02/1 front flexible coupling (tangentially softer)

B Model 107, 124, 126, 201.02/1 rear flexible coupling and model 129.06, 201.03 front and rear

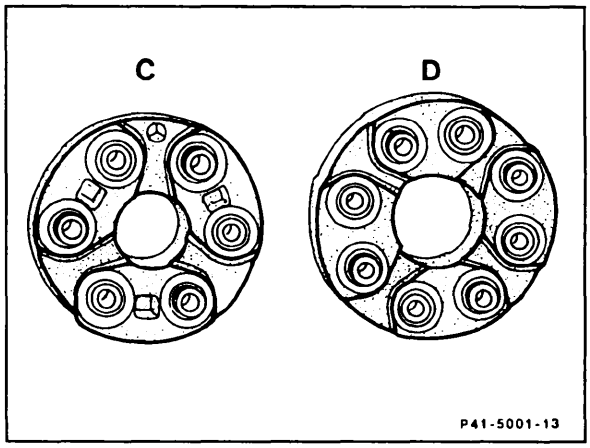

Models,124.036, 129, 140

C Model 129.060 (90mm bolt circle), 129.061, 140.03 (100 mm bolt circle) torsionally rigid

D Model 124.036, 129.066, 140.04/05 (110 mm bolt circle) 4 arm flange and torsionally rigid

A. Models 107, 116

Lubricant	
Centering sleeve, per sleeve approx. 6 g	refer to Specifications for Service Products, page 266.2
Clamp connection	refer to Specifications for Service Products, page 266.2

Tightening torques		Nm
Self-locking hex. nuts for fastening flexible couplings	M 10	45
	M 12	65
Hex. head screws on propeller shaft intermediate bearing		25
Propeller shaft clamping nut		30 – 40
Hex. head screws for fastening tunnel closing plate to frame floor	M8	25
	M 10	45
Hex. head screws for fastening engine mount to tunnel closing plate		25

Special tools

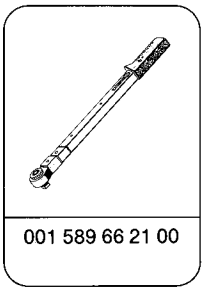

001 589 66 21 00

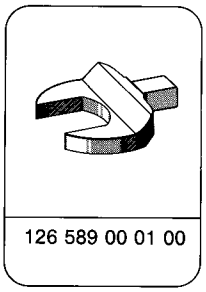

126 589 00 01 00

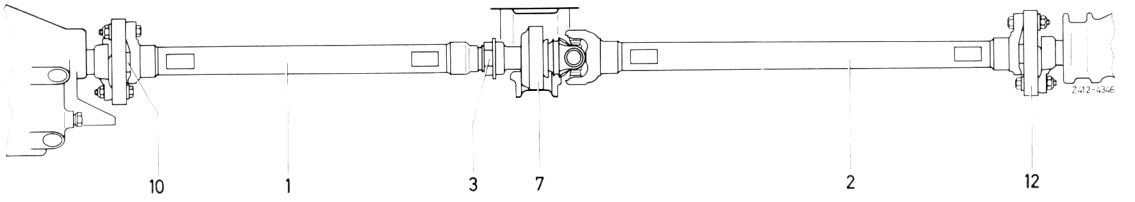

1	Front propeller shaft	7	Propeller shaft intermediate bearing
2	Rear propeller shaft	10	Centering sleeve
3	Propeller shaft clamping nut	12	Flexible coupling (companion plate)

Removal

1 Remove exhaust system (49-100).

2 Unscrew exhaust shielding plate.

3 Lift transmission and support.

4 Release propeller shaft clamping nut for approx. two turns without sliding back rubber sleeve (will slide along).
Open-end wrench element 126 589 00 01 00.

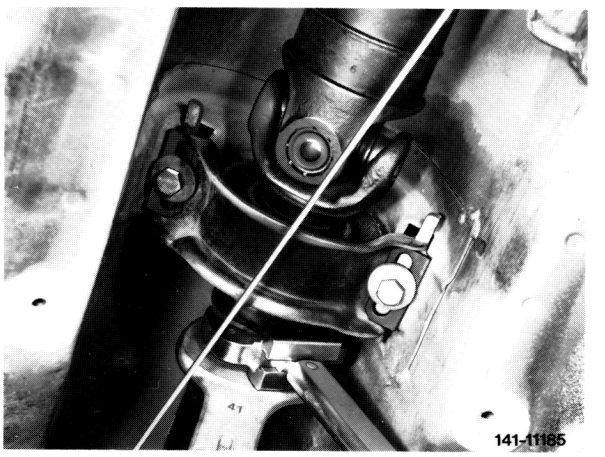

41.1-050/2

5 On model 107, unscrew hex. head screws on tunnel closing plate (19), as well as the two screws (20) of rear engine mount and remove tunnel closing plate.

Model 107

6 On model 116, unscrew hex. head screws of rear engine support on frame floor, as well as of rear engine mount and remove.

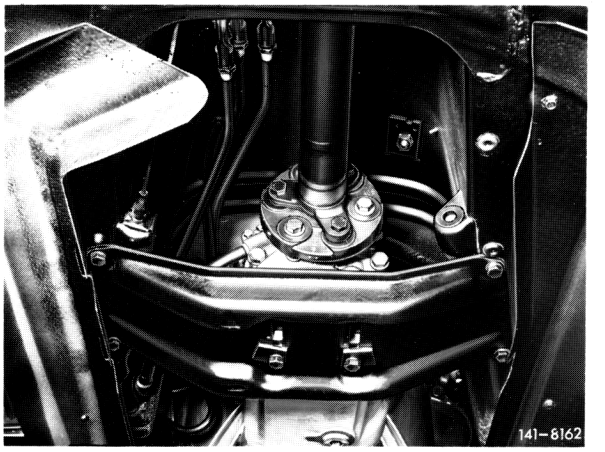

Model 116

7 Remove propeller shaft on transmission and on rear axle.

Note
Flexible coupling remains on propeller shaft.

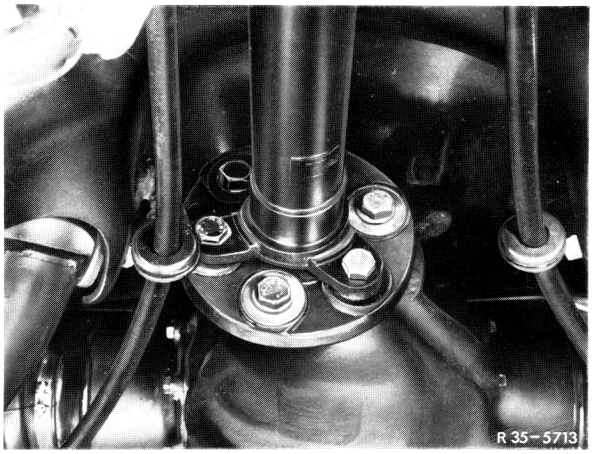

8 Disengage compensating lever of parking brake.

41.1-050/3

9 Unscrew hex. head screws of propeller shaft intermediate bearing on frame floor.

10 Force propeller shaft away from centering pin on transmission and rear axle and pull out toward the rear. Make sure that propeller shaft will not be separated.

⚠

If a separation of propeller shaft is required, mark the respective parts in relation to each other, since the propeller shaft has been balanced in assembled condition. On model 107.042 starting 08/82 the front and the rear propeller shaft are properly identified.

11 On models 107.022/042 starting 09/82 with radially or tangentially soft flexible couplings, loosen the vulcanized centering bushings of flexible coupling prior to pushing back propeller shaft out of flexible coupling (arrows). For this purpose, use a cylindrical mandrel of 10 mm dia. and approx. 150 mm length.

Note

Check flexible couplings, centering sleeves and propeller shaft intermediate bearing for wear and renew parts, if required.

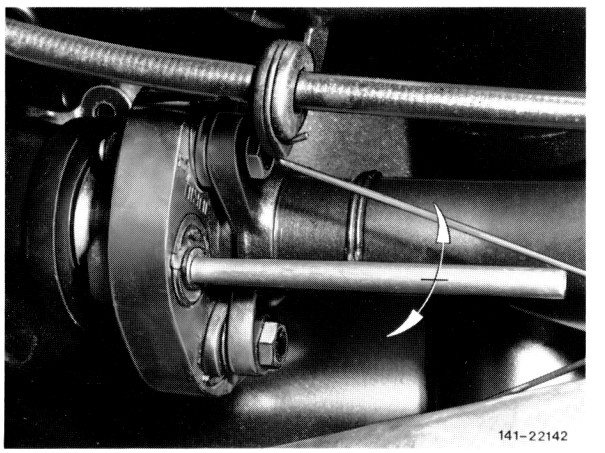

41.1-050/4

Installation

12 Grease cavities of both centering sleeves (refer to Specifications for Service Products page 266.2) with specified grease, filling capacity per sleeve approx. 6 g.

13 Slide propeller shaft with flexible couplings on centering pins on transmission and on rear axle.

14 Fasten propeller shaft intermediate bearing to frame floor, but do not yet tighten.

15 Fasten propeller shaft to transmission and to rear axle. Tightening torque of self-locking hex. nuts (14) for
M 10 = 45 Nm,
M 12 = 65 Nm.

Note
Renew self-locking hex. nuts.

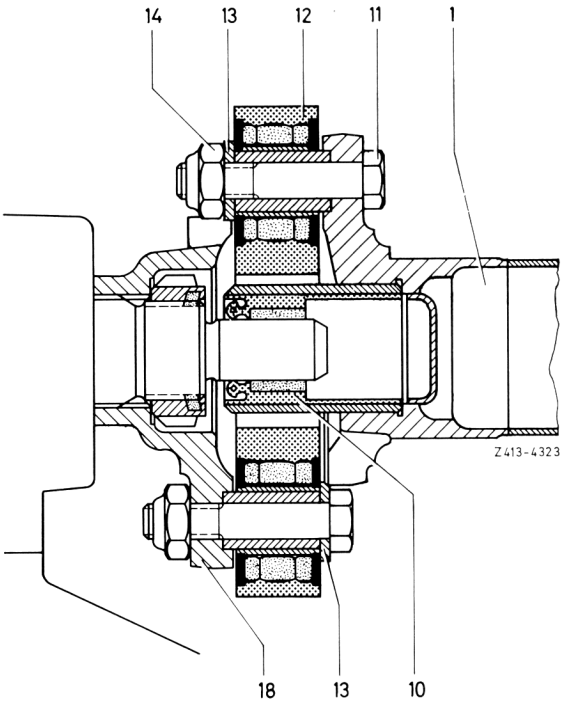

1 Front propeller shaft
10 Centering sleeve
11 Hex. head screw
12 Flexible coupling (companion plate)
13 Washer
14 Self-locking hex. nut
18 Transmission three-legged flange

16 Mount tunnel closing plate or rear engine carrier to frame floor.
Tightening torque of hex. head screws:
M 8 = 25 Nm,
M 10 = 45 Nm.

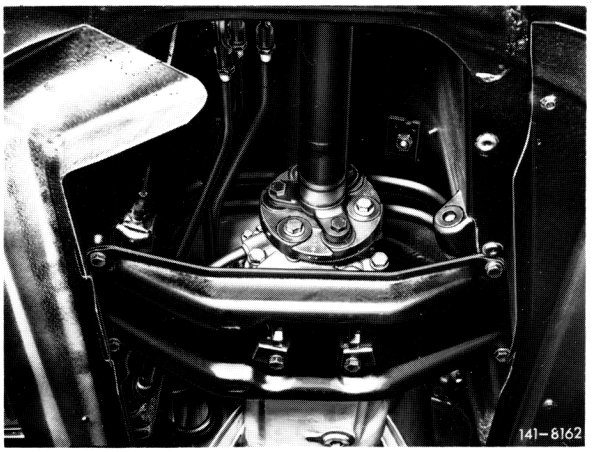

17 Lower transmission and tighten hex. head screws (20) for rear engine mount to 25 Nm.

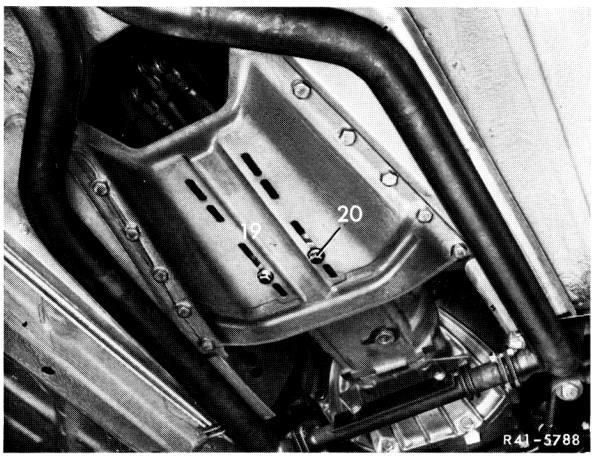

18 Tighten propeller shaft clamping nut to 30 - 40 Nm while paying attention to correct seat of rubber sleeve.

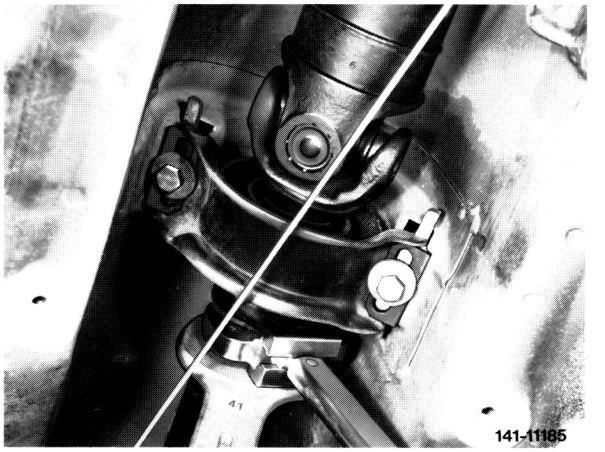

19 Tighten hex. head screws of propeller shaft intermediate bearing to frame floor at 25 Nm.

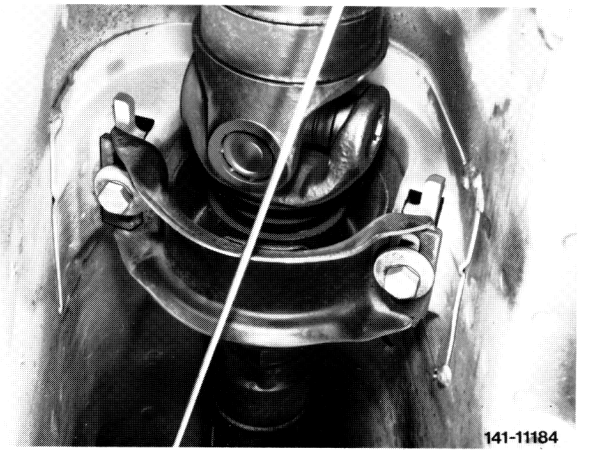

20 Engage compensating lever of parking brake.

41.1-050/6

21 Screw on exhaust shielding plate.

22 Install exhaust system (49-100).

B. Models 114, 115

Lubricant	
Centering sleeve, per sleeve approx. 6 g	refer to Specifications for Service Products page 266.2
Clamp connection	refer to Specifications for Service Products page 266.2

Tightening torques				Nm
Self-locking hex. nuts for fastening flexible couplings				45
Hex. head screws to propeller shaft intermediate bearing				25
Hexagon head bolts for bridges on frame floor			M8	25
			M 10	45
Propeller shaft clamping nut	2-piece propeller shaft			30 – 40
	3-piece propeller shaft	front		30 – 40
		rear		200
Hex. head screws for fastening rear engine carrier to frame floor			M 10	45
Hex. head screws for fastening rear engine mount to engine carrier			M 8	25

41.1-050/7

Special tools

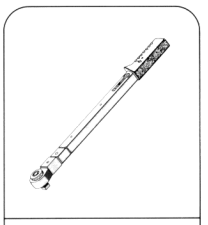

001 589 66 21 00

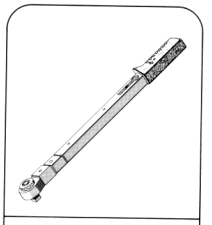

001 589 67 21 00

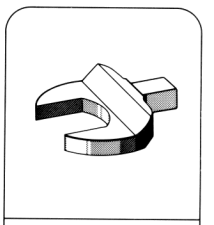

126 589 00 01 00

Removal

1 Disengage expansion lever and cable lines of parking brake.

2 Unscrew bridge (1) and rear bridge on frame floor.

Note
To loosen hex. head screws on lefthand side at rear bridge the rear exhaust line must be slightly lowered, if required.

3 Loosen propeller shaft clamping nut for approx. two turns.
On 3-piece propeller shaft, loosen front clamping nut only.

411-050/8

4 Lift transmission and support.

5 Unscrew hex. head screws of rear engine carrier.

6 Remove propeller shaft with flexible coupling (3) from transmission and rear axle.

7 Unscrew hex. head screws of propeller shaft intermediate bearing on frame floor.

8 Force propeller shaft from centering pin of rear axle and remove toward the rear. Make sure that propeller shaft is not separated.

41.1-050/9

⚠

If a separation of propeller shaft is required, mark the respective parts in relation to each other, since the propeller shaft has been balanced in assembled condition.

On model 115.114 with manual transmission a vibration damper (20) has been installed on front propeller shaft during the period from the middle of 08/75 to the start of 12/75 (starting chassis end no. 027 060 to 040 338).

The vibration damper cannot be renewed. If a vibration damper is defective, the complete propeller shaft must be replaced.

If during renewal of flexible coupling the vibration damper is separated from propeller shaft, pay attention to the applied color marking during assembly.

9 Check flexible couplings, centering sleeves and propeller shaft intermediate bearing for wear, renew parts if required.

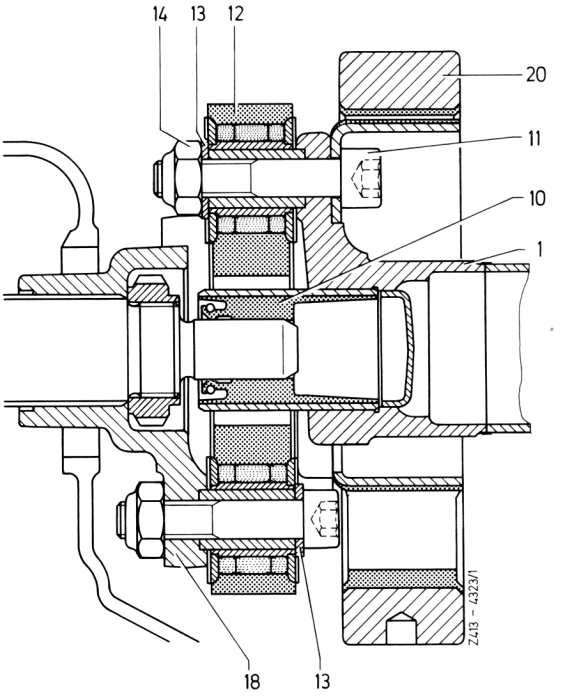

1 Front propeller shaft
10 Centering sleeve
11 Hex. head screw
12 Flexible coupling
13 Washer
14 Self-locking nut
18 Transmission flexible flange
20 Vibration damper

Installation

10 Grease cavities of the two centering sleeves of plastic bushing with Molykote grease (refer to Specifications for Service Products page 266.2), filling capacity per sleeve approx. 6 g.

11 Slide propeller shaft with flexible couplings on centering pins on transmission and on rear axle.

12 Fasten propeller shaft intermediate bearing to frame floor, but do not yet tighten.

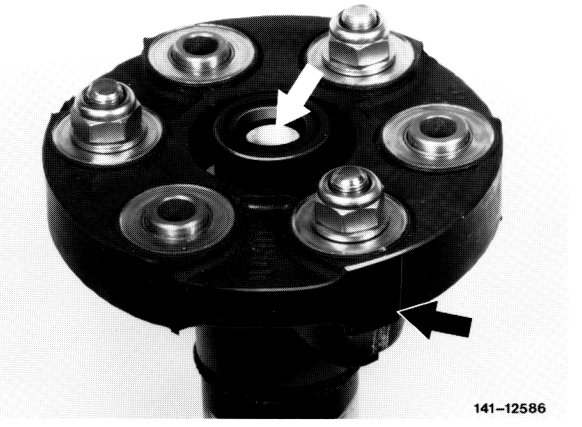

41.1-050/10

13 Fasten propeller shaft to transmission and to rear axle. Tightening torque of self-locking hex. nuts:
M 10 = 45 Nm,
M 12 = 65 Nm.

Note
Renew self-locking hex. nuts.

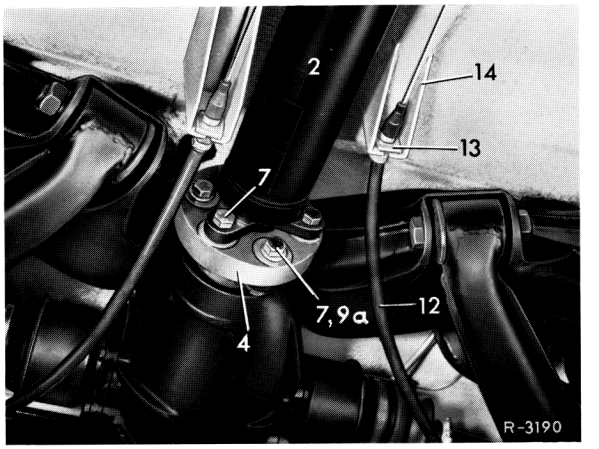

14 Attach rear engine carrier.
Tightening torque of hex. head screws:
M 10 = 45 Nm,
M 8 = 25 Nm.

15 Fasten bridge (1) and rear bridge to frame floor. Tightening torque of hex. head screws:
M 10 = 45 Nm,
M 8 = 25 Nm.

16 Engage compensating lever of parking brake and adjust (42-525).

41.1-050/11

17 Tighten propeller shaft clamping nut, while paying attention to correct seat of rubber sleeve. Tightening torque on 2-piece propeller shaft 30 - 40 Nm, on 3-piece propeller shaft at front 30 - 40 Nm, at the rear 200 Nm.

Note

Prior to tightening clamping nuts on 3-piece propeller shaft, make sure that the intermediate shaft is not knocking against front propeller shaft intermediate bearing, nor against rear propeller shaft intermediate bearing. The intermediate shaft should have the same distance to the respective intermediate bearing at its ends.

18 Tighten hex. head screws of propeller shaft intermediate bearing to frame floor at 25 Nm.

41.1-050/12

C. Model 123

Lubricant

Centering sleeve, per sleeve approx. 6 g	refer to Specifications for Service Products, page 266.2
Clamp connection	refer to Specifications for Service Products, page 266.2

Tightening torques

			Nm
Self-locking hex. nuts for fastening flexible couplings			45
Hex. head screws on propeller shaft intermediate bearing			25
Propeller shaft clamping nut	2-piece propeller shaft		30 – 40
	3-piece propeller shaft	front	30 – 40
		rear	200
Hex. head screws for fastening rear engine carrier to frame floor			45
Hex. head screws for fastening rear engine mount to engine carrier			25

Special tools

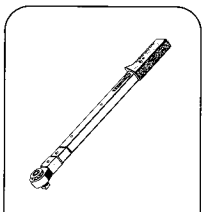

001 589 66 21 00

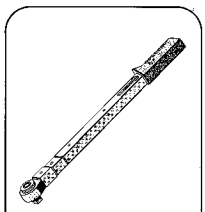

001 589 67 21 00

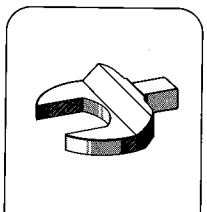

126 589 00 01 00

41.1-050/B

Removal

On vehicles with double pipe exhaust system.

1 Remove exhaust system (49-100).

2 Unscrew exhaust shielding plate.

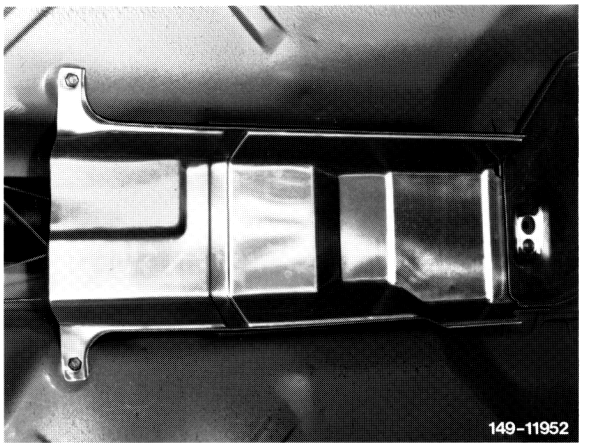

3 Disengage compensating lever and cable lines (arrows) of parking brake.

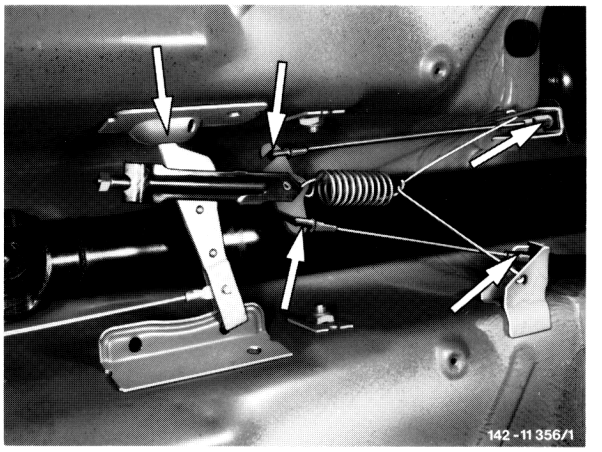

4 Release propeller shaft clamping nut for approx. two turns.
Open-end wrench element 000 589 13 01 00.

Note
On 3-piece propeller shaft loosen front clamping nut only.

5 Lift transmission and support.

6 Unscrew hex. head screws on rear engine carrier.

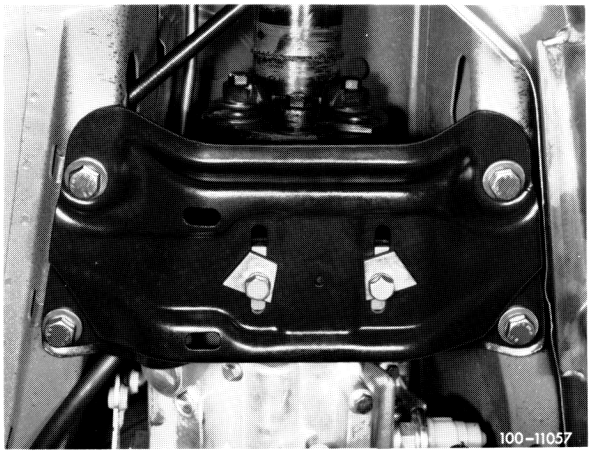

Rear engine carrier on all 5- and 6-cylinder engines and on 4-cylinder engines with automatic transmission.

41.1-050/14

Rear engine carrier on 4-cylinder engines with manual transmission

7 Remove propeller shaft on transmission and on rear axle (arrows).

Note
Flexible coupling remains on propeller shaft.

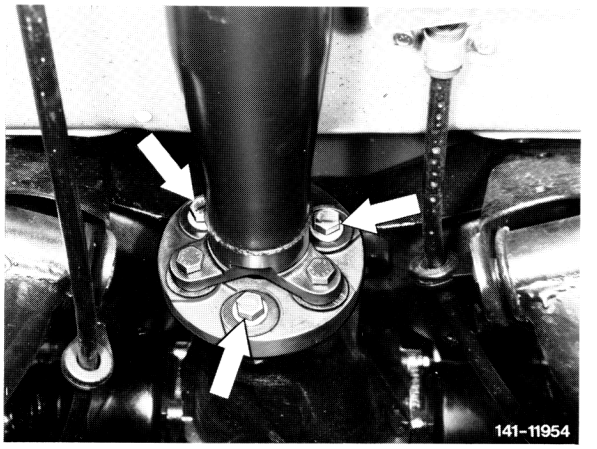

8 Unscrew hex. head screws (arrows) of propeller shaft intermediate bearing on frame floor.

9 Force propeller shaft away from centering pin on transmission and on rear axle. Pull out propeller shaft without vibration damper toward the rear. Make sure that the propeller shaft will not be separated.

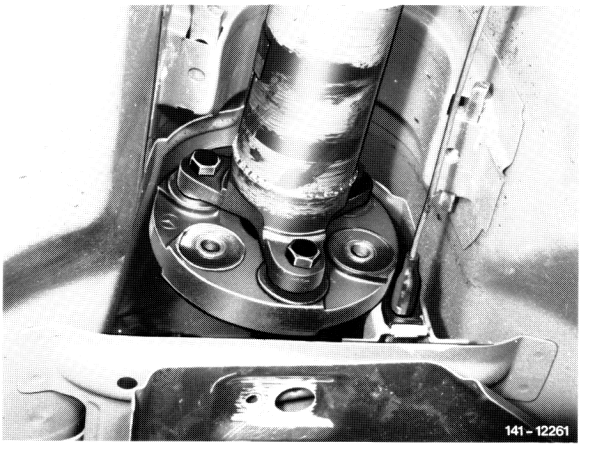

41.1-050/15

Note

On vehicles with radially or tangentially soft flexible couplings, loosen the vulcanized centering bushings of flexible coupling prior to pushing back propeller shaft out of flexible flange (arrows). For this purpose, use a cylindrical mandrel of 10 mm dia. and approx. 150 mm in length.

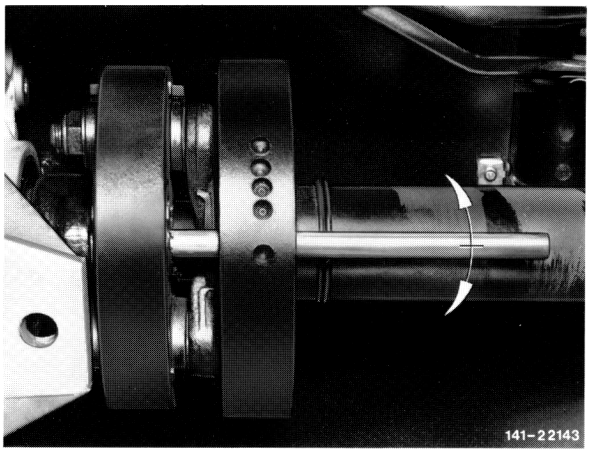

10 On vehicles up to 07/82 with 5-cylinder diesel engine, as well as with engine 102, mark the front and rear propeller shaft with vibration damper in relation to each other (arrows). Remove the front propeller shaft in forward direction and the rear propeller shaft toward the rear.

Removal of complete propeller shaft toward the rear is impossible on vehicles with vibration damper for reasons of available space.

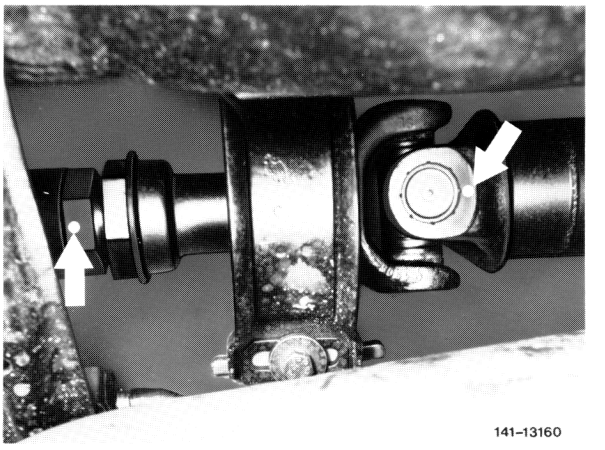

11 On vehicles starting 08/82, an identification mark is located on front and rear propeller shaft.

The front propeller shaft is provided with one hump and the rear propeller shaft with two arow-shaped humps (arrows). The hump of the front propeller shaft should be located between the two arrows on fork-type flexible joint (arrows).

Note

The identifying mark has in part already been in place on propeller shaft prior to 08/82, but was not made use of during assembly. Propeller shafts, on which the markings are not in agreement, should therefore be identified prior to removal and the two parts should again be assembled after this identification.

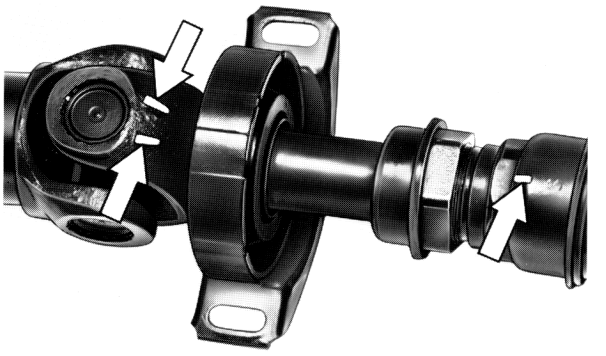

41.1-050/16

12 Starting 09/79 a 2-piece propeller shaft with vibration damper is installed instead of a 3-piece propeller shaft on vehicles with engine 115.
Here, a separation of the front and the rear propeller shaft is not required, since the vibration damper has a smaller diameter.
For this reason, the complete propeller shaft can be removed toward the rear.

13 Check flexible couplings (12), centering sleeves (10) and propeller shaft intermediate bearing for damage, renew damaged parts.

⚠
If separation of the propeller shaft is required, mark the parts in relation to each other, since the propeller shaft has been balanced in assembled condition.

The vibration damper (20) cannot be renewed. If the vibration damper is defective, exchange front or complete propeller shaft.

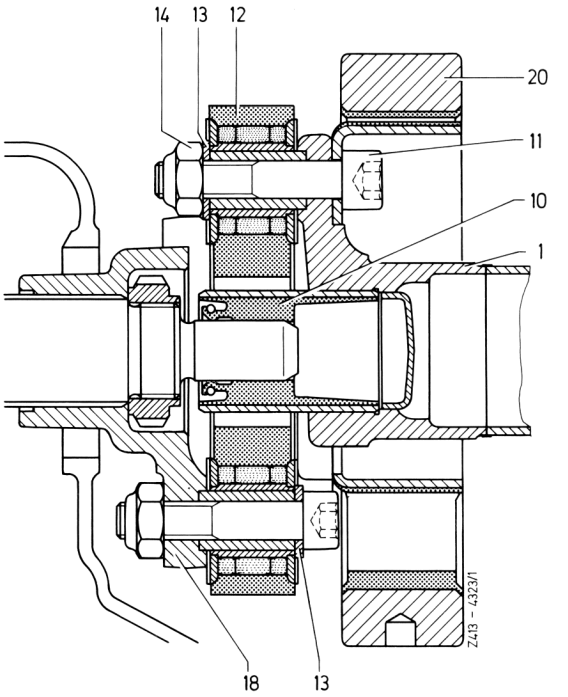

1	Front propeller shaft
10	Centering sleeve
11	Hex. head screw
12	Flexible coupling
13	Washer
14	Self-locking hex. nut
18	Flexible flange
20	Vibration damper

On vehicles with vibration damper up to 08/81

14 If the vibration damper is separated from propeller shaft when renewing flexible coupling, mark vibration damper and three-legged flange in relation to each other (arrow).

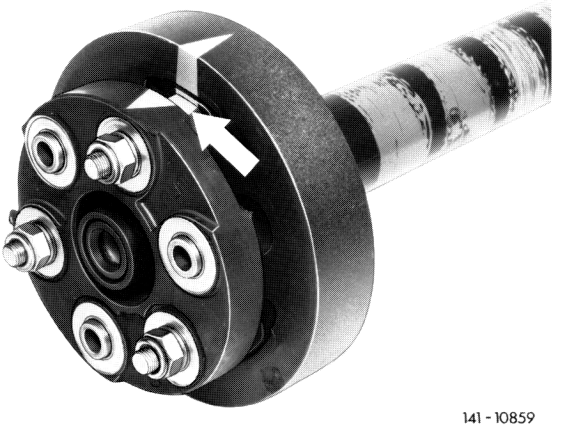

41.1-050/17

On vehicles with vibration damper starting 09/81

15 If upon renewal of flexible coupling the vibration damper is separated from propeller shaft, mount vibration damper and three-legged flange as shown on drawing. The installation position is correct, if the arrow of the vibration damper points toward hump on three-legged flange.

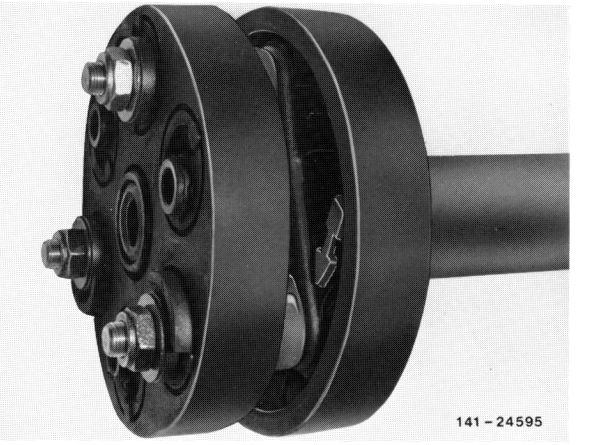

Installation

16 Grease cavities of both centering sleeves on plastic bushing with Molykote grease (refer to Specifications for Service Products page 266.2, filling capacity per sleeve approx. 6 g).

17 Slide propeller shaft without vibration damper onto centering pins on transmission and onto rear axle.

Note

Refers also to vehicles with engine 115 starting 09/79 with vibration damper.

18 Insert front propeller shaft with vibration damper from the front through the bridge and slide onto centering pin on transmission. Push rear and front propeller shaft at clamping connection against each other and slide on centering pin at rear axle.

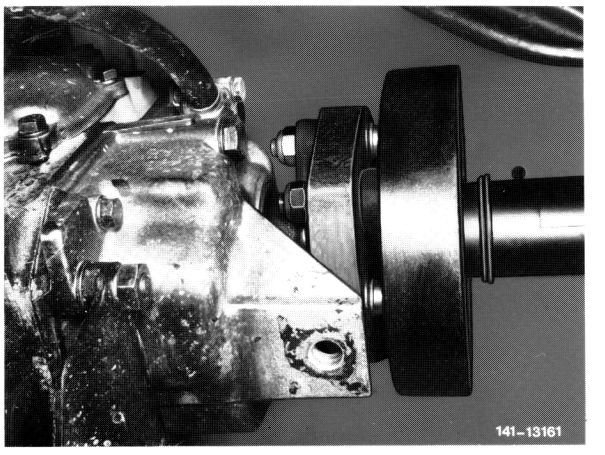

19 Fasten propeller shaft intermediate bearing on frame floor, but do not yet tighten.

20 Fasten propeller shaft to transmission and rear axle. Tightening torque of self-locking hex. nuts 45 Nm.

Note
Renew self-locking hex. nuts.

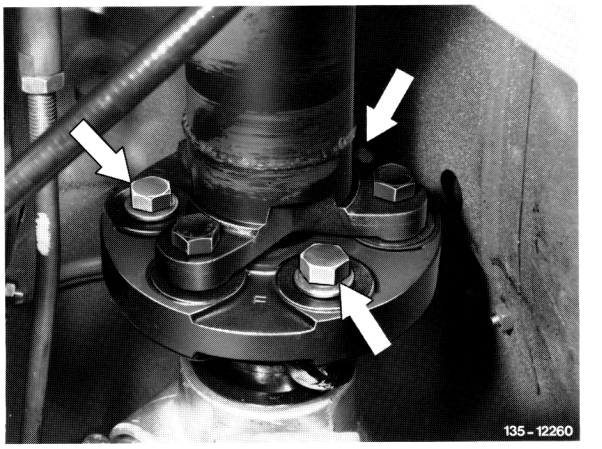

21 Mount rear engine carrier. Tightening torque of hex. head screws 45 Nm.

22 Lower transmission and tighten hex. head screw for rear engine mount to 25 Nm.

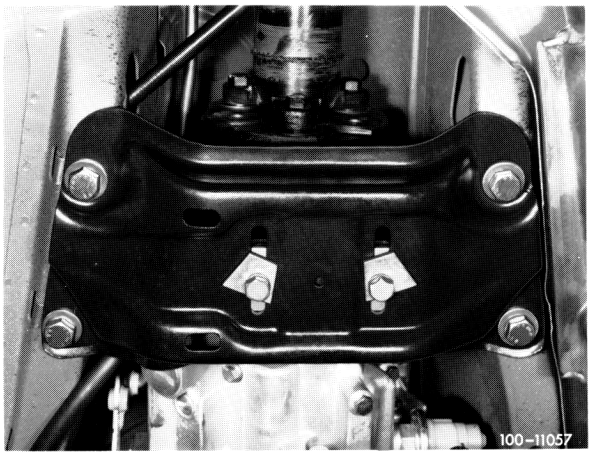

23 Engage cable lines and compensating lever of parking brake and adjust (42-525).

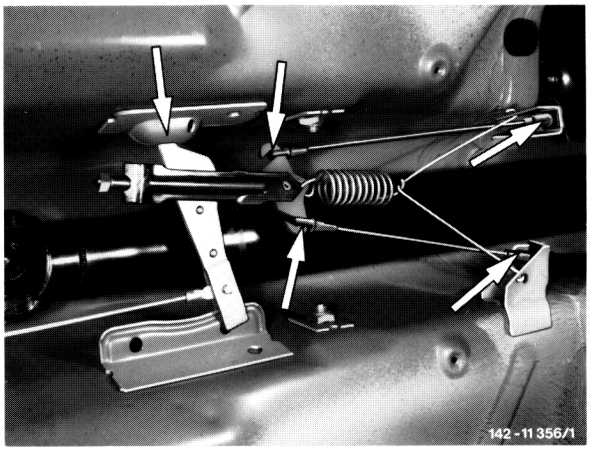

41.1-050/19

24 Tighten propeller shaft clamping nut on propeller shaft, while paying attention to correct seat of rubber sleeves. Tightening torque on 2-piece propeller shaft 30 - 40 Nm, on 3-piece propeller shaft at front 30 - 40 Nm, at the rear 200 Nm.

Note
Prior to tightening clamping nut on 3-piece propeller shaft, make sure that the intermediate shaft is not knocking against front propeller shaft intermediate bearing, nor against rear propeller shaft intermediate bearing. At its ends the intermediate shaft should have approximately the same distance from each respective intermediate bearing.

25 Tighten hex. head screws (arrows) of propeller shaft intermediate bearing on frame floor to 25 Nm.

On vehicles with two-pipe exhaust system:

26 Mount shielding plate.

27 Install exhaust system (49-100).

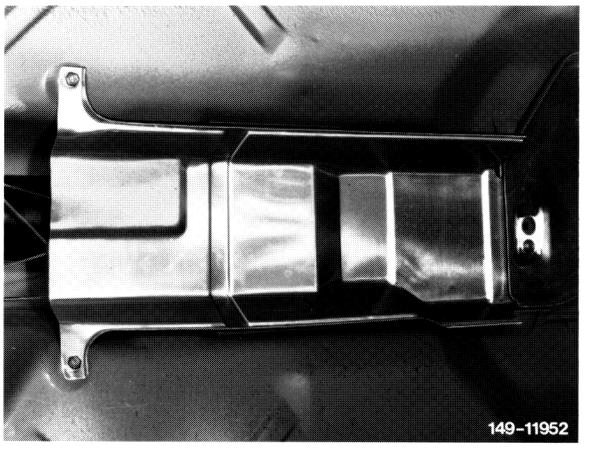

41.1-050/20

D. Model 124

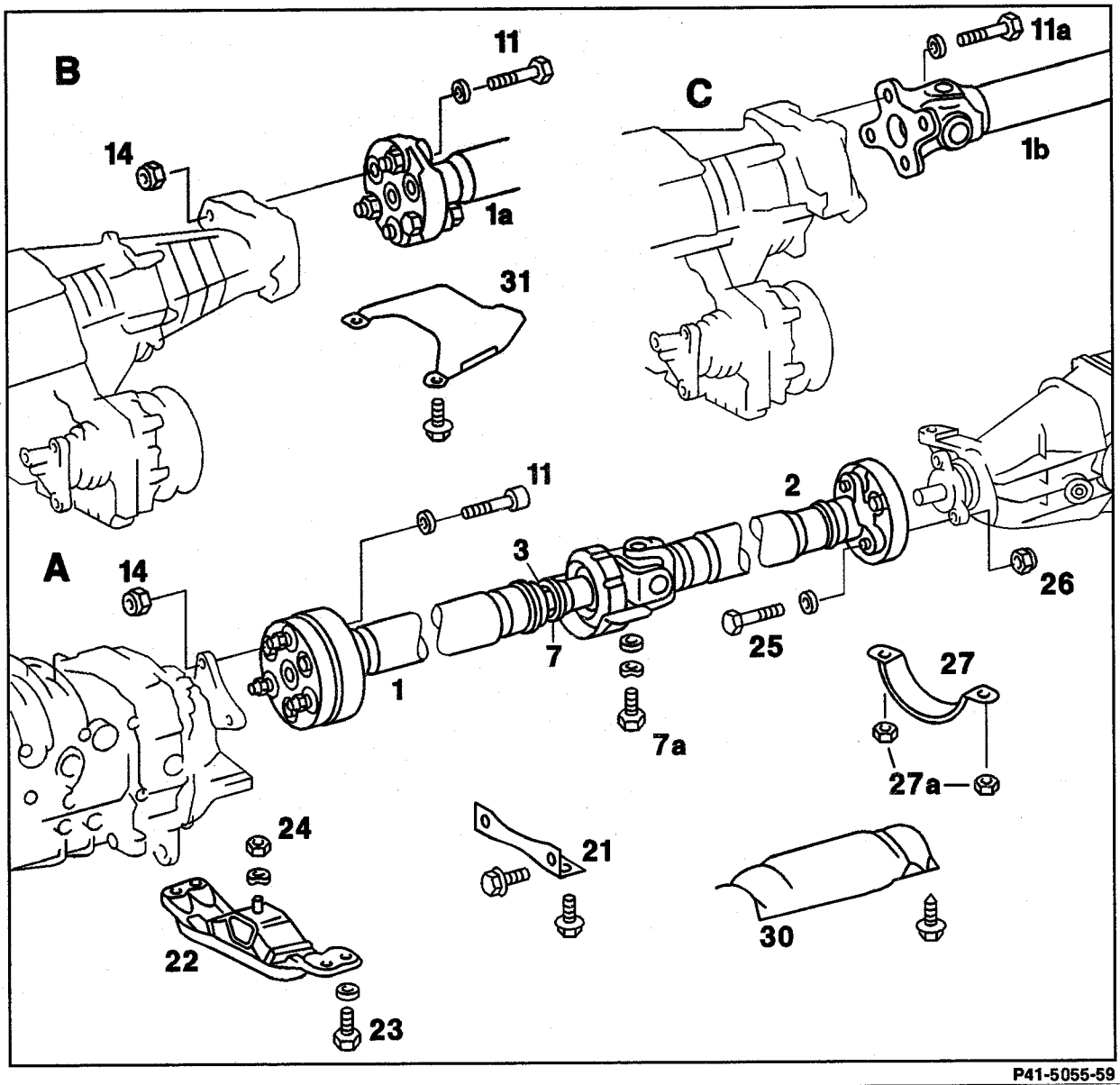

P41-5055-59

Versions:
A Standard
B Models 124.2, 124.330, 393
C Model 124.333

Exhaust shielding plate (30), 4MATIC (31)	screw off and on (items 1, 2).
Transmission	lift, support, lower.
Engine carrier (22)	screw off and on, (not with 4MATIC) Hex. head screws (23) 45 Nm, hex. nut (24) 70 Nm (item 4).
Cross bridge (21)	Unscrew, screw on, 25 Nm (item 5).
As of 09/89 bracket (27)	Unscrew, screw on (item 12).

Propeller shaft clamping nut (3)	loosen for approx. two turns. Tightening torque 30 - 40 Nm. Torque wrench 001 589 66 21 00 Open end wrench element 126 589 00 01 00 or 201 589 00 01 00 (item 6).
Front propeller shaft (1, 1a)	mount off and on at transmission, 45 Nm. Loosen fitted sleeves with mandrel 10 mm dia. Renew self-locking hex. nuts (14) (item 7).
Front propeller shaft (1b) model 124.333	mount off and on at transmission, 55 Nm (item 8).
Rear propeller shaft (2)	mount off and on at rear axle center piece, 45 Nm. Renew self-locking hex. nuts (26) (item 10).
Propeller shaft intermediate bearing (7)	screw off and on, tighten hex. head screws (7a) only after fastening propeller shaft to transmission and rear axle, 25 Nm (item 11).
Propeller shaft, complete	force from centering pin on transmission and rear axle and pull out toward the rear (item 10 - 13).
Centering sleeves	check for wear, with plastic or bronze bushings, grease cavities with Molykote grease and use multi-purpose grease with multi-component bushings (refer to Specifications for Service Products page 266.2 and 267, quantity per sleeve approx. 6).

Special tools

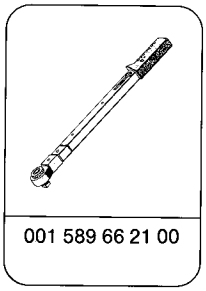
001 589 66 21 00

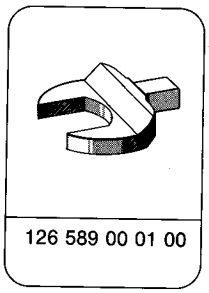
126 589 00 01 00

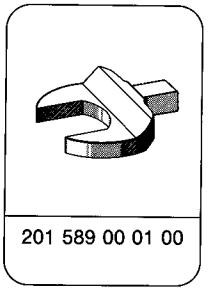
201 589 00 01 00

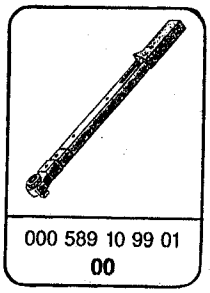
000 589 10 99 01 **00**

Removal and installation

1 Unscrew exhaust shielding plate (arrows).

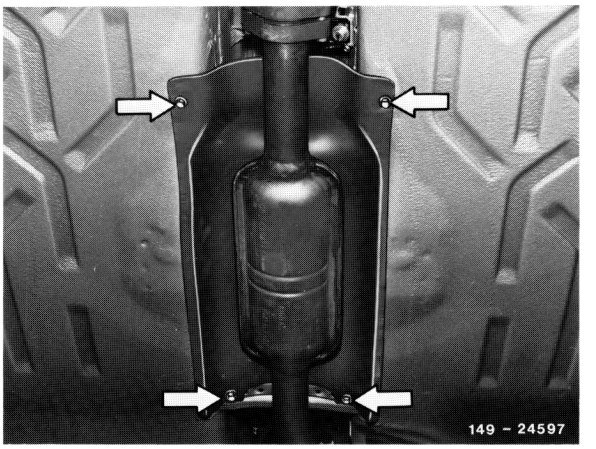

4MATIC

2 Unscrew exhaust shielding plate.

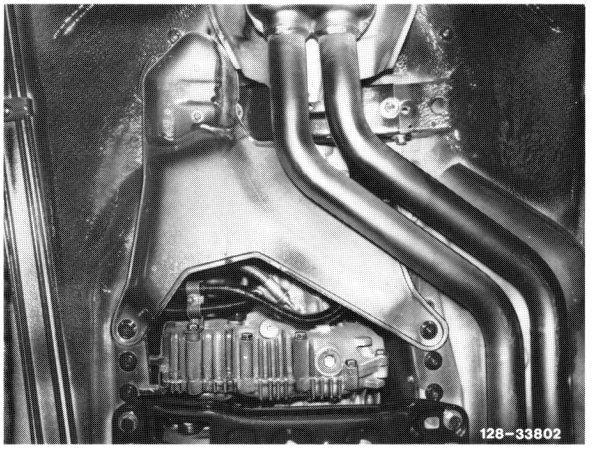

3 Lift transmission and support.

4 Unscrew hex. head screws and hex. nut (arrows) and remove rear engine carrier with engine mount (not with 4MATIC).

Installation note

Tightening torque hex. head screws 45 Nm, hex. nut 70 Nm.

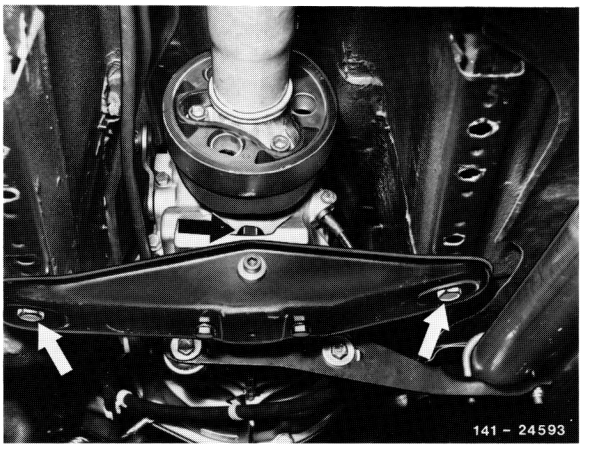

4MATIC

5 Unscrew cross bridge (21).

Installation note

Tightening torque 25 Nm.

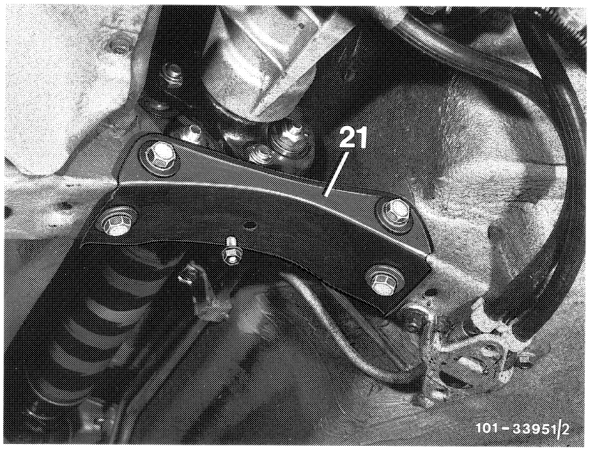

41.1-050/23

6 Loosen propeller shaft clamping nut (3) for approx. two turns without sliding back rubber sleeve (sliding along).

Installation note
Tightening torque 30 - 40 Nm, while paying attention to correct seat of rubber sleeve.

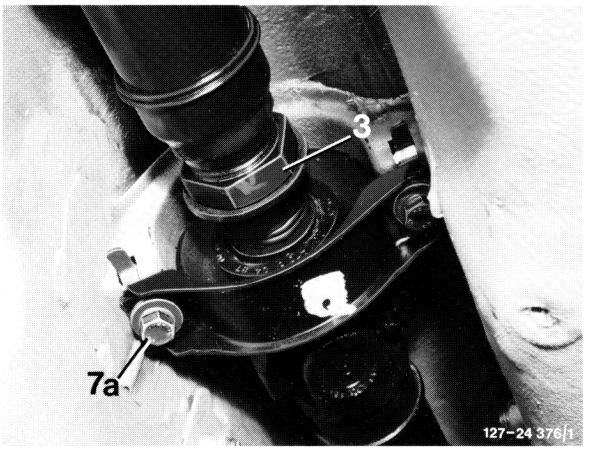

7 Remove front propeller shaft from transmission.

Note
Flexible coupling remains on propeller shaft.

Installation note
Renew self-locking hex. nuts.
Tightening torque M 10 = 45 Nm,
M 12 = 60 Nm.

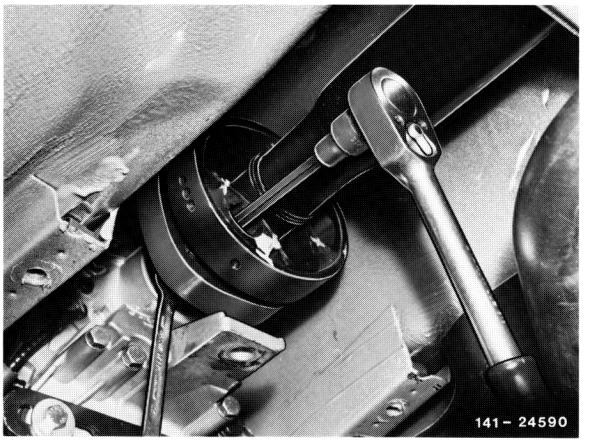

Model 124.333
8 Remove front propeller shaft (1b) from transfer case.

Installation note
Renew self-locking hex. nuts.
Tightening torque 55 Nm.

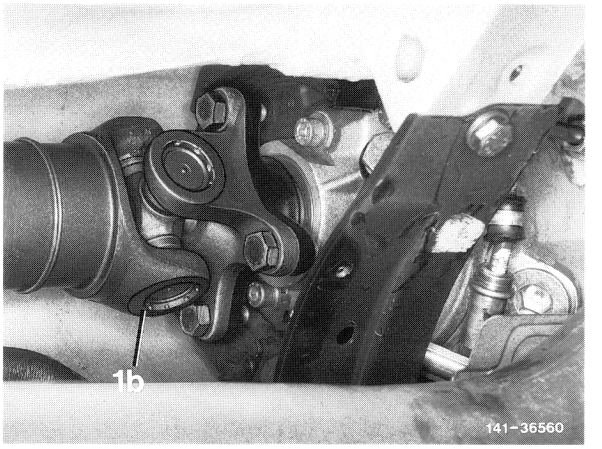

9 Prior to sliding back propeller shaft, loosen vulcanized fitted sleeves of soft pull-push flexible coupling installed on transmission end by means of a mandrel in flexible joint flange. For this purpose, use a cylindrical mandrel of 10 mm dia. and approx. 150 mm in length (not on models 124.333/393).

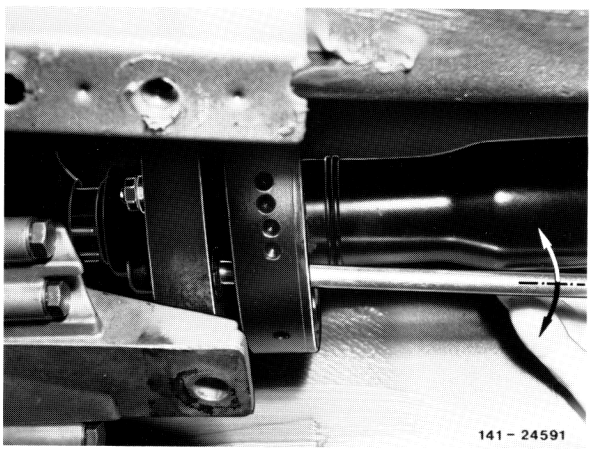

41.1-050/24

10 Remove propeller shaft from rear axle (arrows).

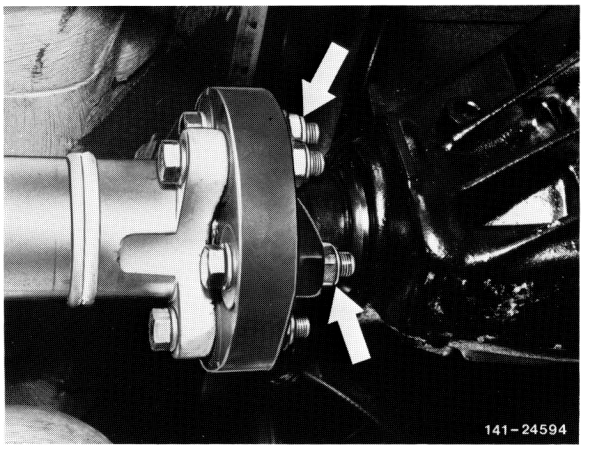

Note
Flexible coupling remains on propeller shaft.

Installation note
Renew self-locking hex. nuts.
Tightening torque M 10 = 45 Nm,
M 12 = 60 Nm.

11 Unscrew hex. head screws (7a) of propeller shaft intermediate bearing on frame floor.

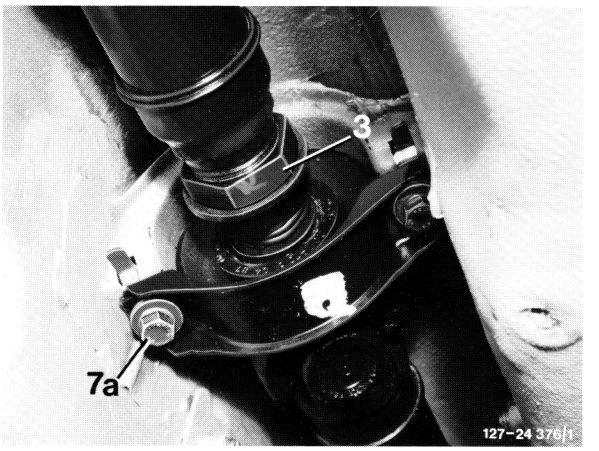

Installation note
Tighten hex. head screws only after fastening propeller shaft to transmission and rear axle, tightening torque 25 Nm.

Note
On vehicles with manual transmission pay attention to correct seat of roller sleeves in vibration damper after tightening transmission-propeller shaft connection, press-in roller sleeves, if required (arrows).

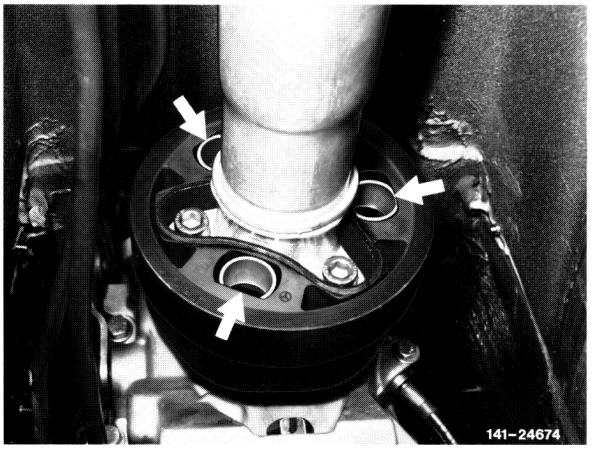

12 Unscrew bracket for safety belt fixing on vehicles as of 09/89.

Installation note
Tightening torque of hexagon nuts 280 Nm.

13 Force propeller shaft from centering pin on transmission and rear axle and remove toward the rear.

41.1-050/25

⚠

If a separation of the propeller shaft is required, reassemble the parts again as shown. The front propeller shaft is provided with a hump and the fork-type joint of the rear propeller shaft with two arrow-type humps. The hump of the front propeller shaft should be located between the two arrows on fork-type joint (arrows).

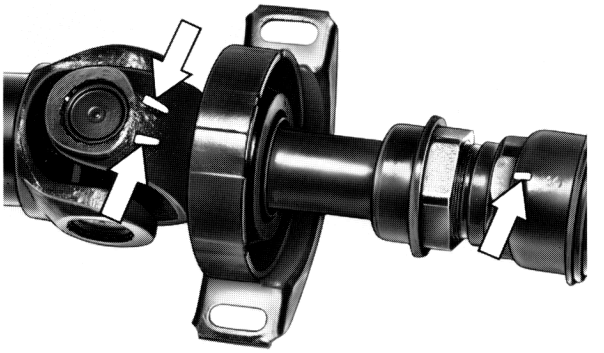

141-23660

14 Check flexible coupling, centering sleeves, vibration damper

Note

A soft or hard pull-push flexible coupling (except on models 124.333/393) is installed on the transmission and a hard flexible coupling is installed on the rear axle.

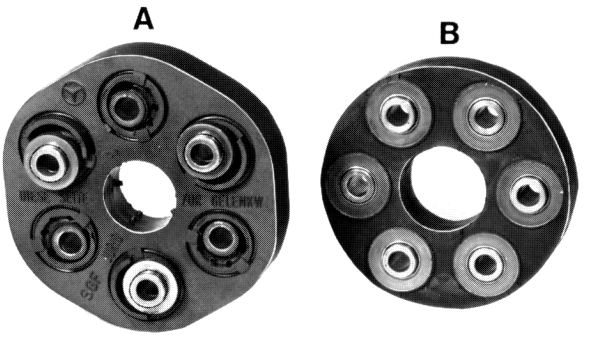

141 - 26418

A Soft pull-push flexible couplin
B Hard flexible coupling

15 If during renewal of flexible coupling the vibration damper is separated from propeller shaft or the vibration damper is renewed, mount vibration damper and three-legged flange as shown.

The installation position is correct if the arrow on the vibration damper is mounted behind the hump on the three-legged flange. (Model 124 with a bolt circle diameter of 80 mm.)

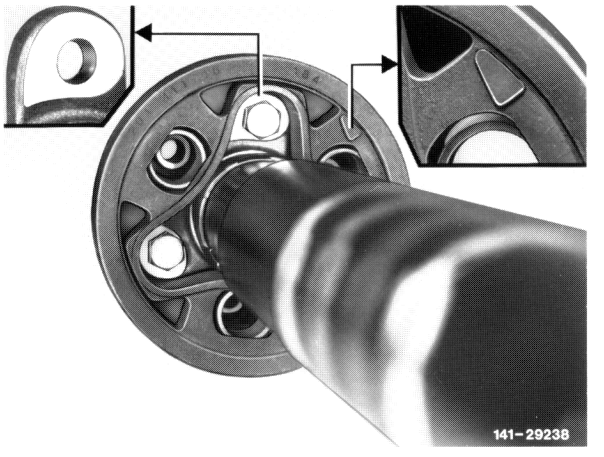

141-29238

41.1 050/26

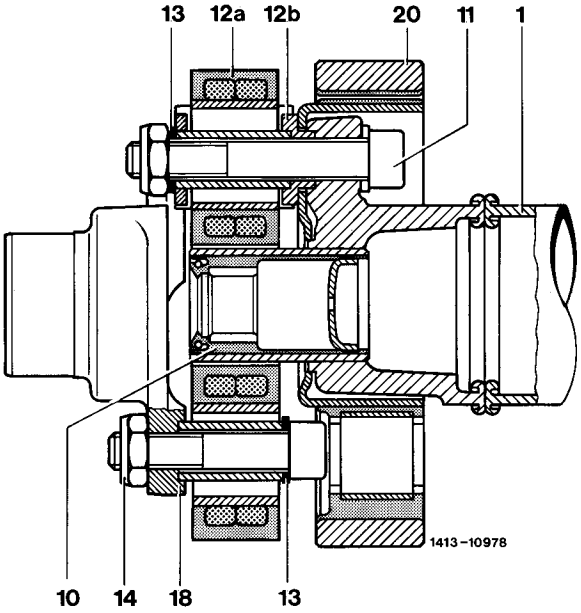

Layout model 124 with 80 mm bolt circle dia.

1	Front propeller shaft
10	Centering sleeve
11	Hex. head screw
12	Flexible coupling
12b	Centering bushing
13	Washer
14	Self-locking hex. nut
18	Flexible flange
20	Vibration damper

16 Model 124 with a bolt circle diameter of 90 mm. The installation position is correct when the arrow of vibration damper points to hump on three-legged flange.

Marking on 1st version up to 12/89

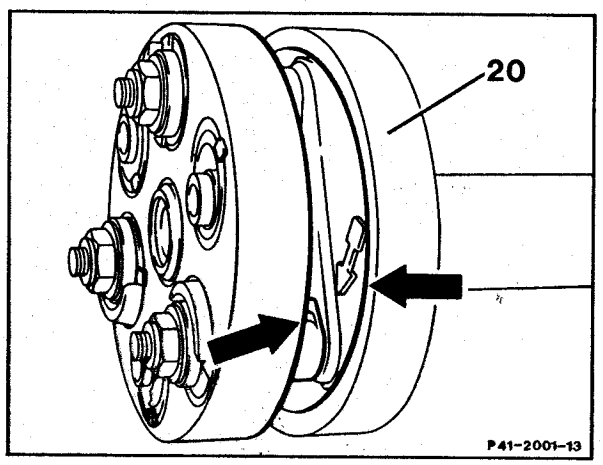

Marking on 2nd version as of 01/90

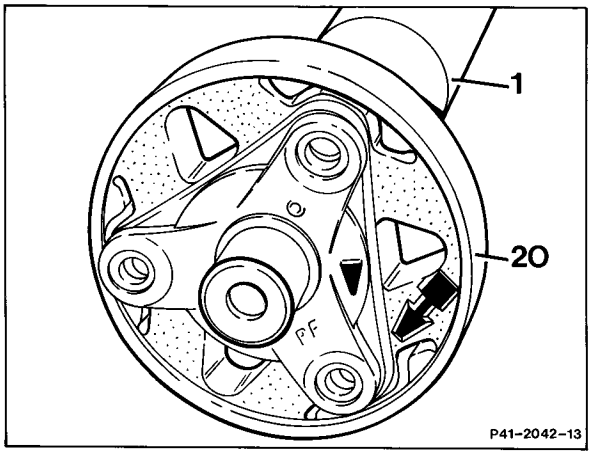

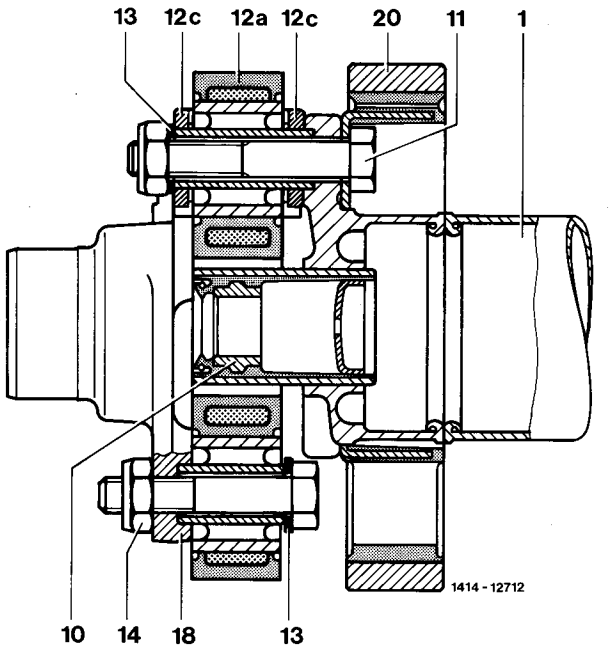

Layout models 124 with 90 mm bolt circle dia.

1	Front propeller shaft
10	Centering sleeve
11	Hex. head screw
12	Flexible coupling
12c	Stop washers
13	Washer
14	Self-locking hex. nut
18	Flexible flange
20	Vibration damper

17 With plastic or bronze bushings, grease cavities of both centering sleeves with Molykote grease and use multi-purpose grease with multi-component bearing bushings (refer to Specifications for Service Products page 266.2 and 267, filling capacity per sleeve approx. 6 g).

18 For installation, proceed vice versa.

E. Model 126

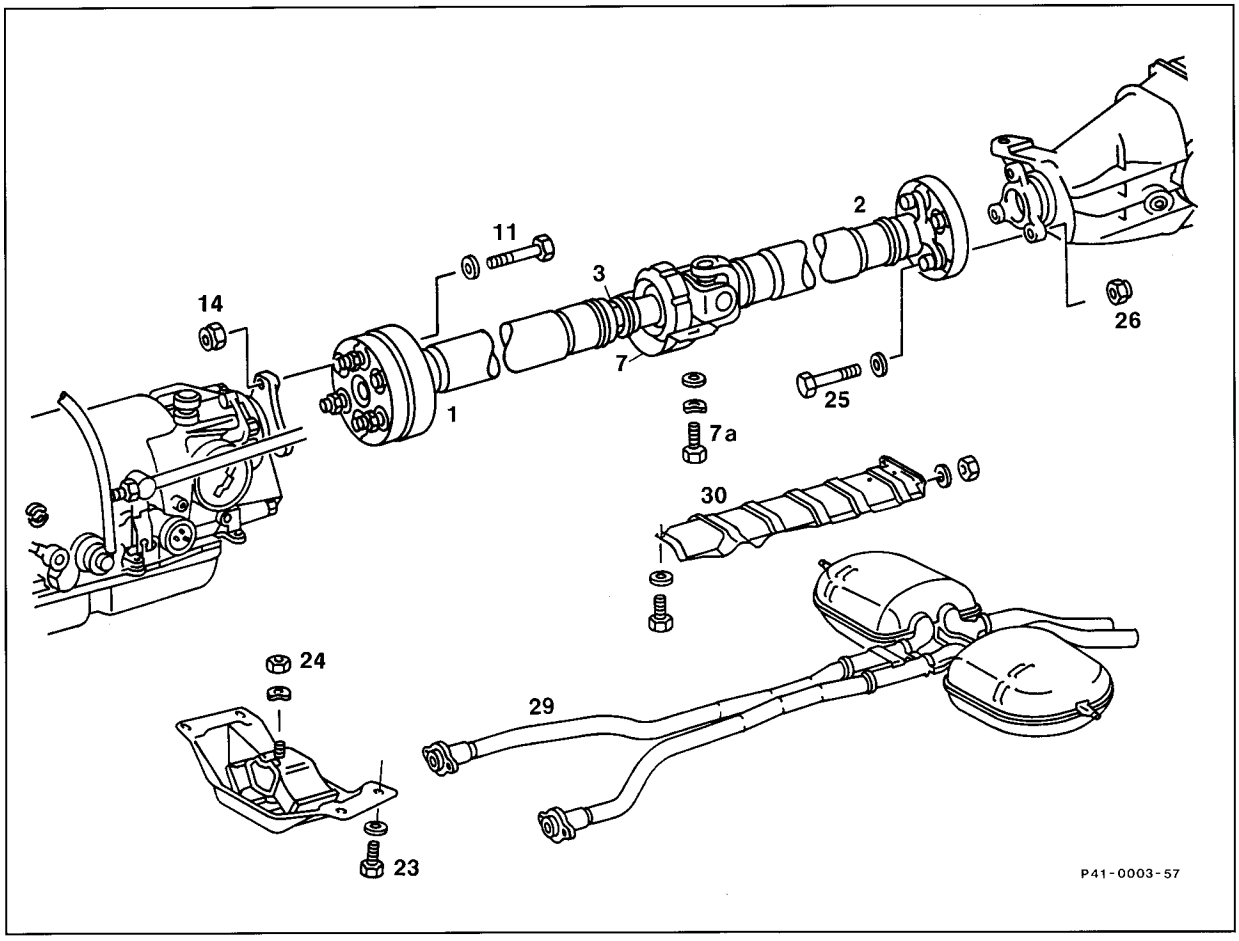

Exhaust system (29) as of plug connection (connector)	remove and install (49-100).
Exhaust shielding plate (30)	screw off and on, 25 Nm (item 2).
Transmission	lift, support, lower.

Engine carrier	screw off and on, 45 Nm (item 4).
Propeller shaft clamping nut (3)	loosen for approx. two turns. Tightening torque 30 - 40 Nm, open end wrench element 126 589 00 01 00 (item 6).
Front propeller shaft (1)	remove from and mount on transmission, M 10 = 45 Nm, M 12 = 65 Nm. On model 126.02 loosen fitted sleeve of flexible coupling with mandrel of 10 mm dia. Renew self-locking hex. nuts (14) (items 7, 8).
Rear propeller shaft (2)	remove from and mount on rear axle, M 10 = 45 Nm, M 12 = 65 Nm. Renew self-locking hex. nuts (26) (item 9).
Propeller shaft intermediate bearing (7)	screw off and on. Tighten hex. head screws (7a) only after fastening propeller shaft to transmission and rear axle, 25 Nm (item 10).
Propeller shaft, complete	force off centering pin on transmission and rear axle and pull out toward the rear (item 11).
Centering sleeves	check for wear, with plastic or bronze bushings, grease cavities with Molykote grease and use multi-purpose grease with multi-component bushings (refer to Specifications for Service Products page 266.2 and 267, quantity per sleeve approx. 6 g).

Special tools

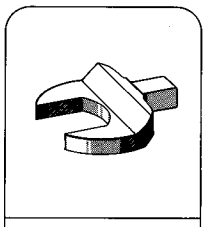

126 589 00 01 00

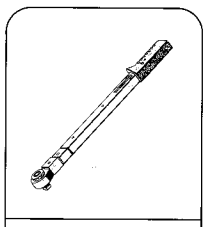

001 589 66 21 00

Removal and installation

1 Remove exhaust system as of plug connection (49-100).

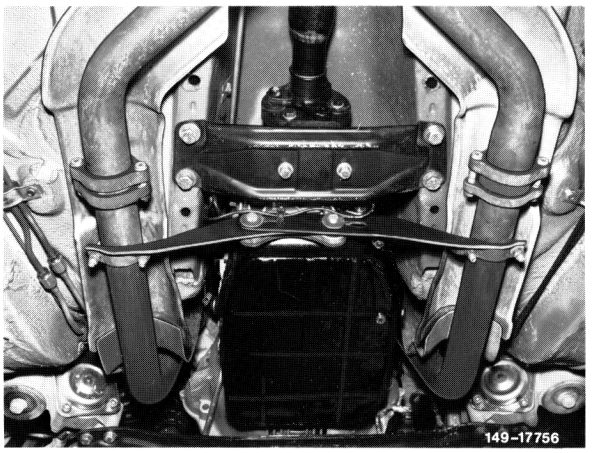

2 Unscrew exhaust shielding plate.

Installation note
Tightening torque of hex. head screws or nuts 25 Nm.

3 Support transmission.

4 Unscrew hex. head screws of rear engine carrier from frame floor.

Installation note
Tightening torque 45 Nm.

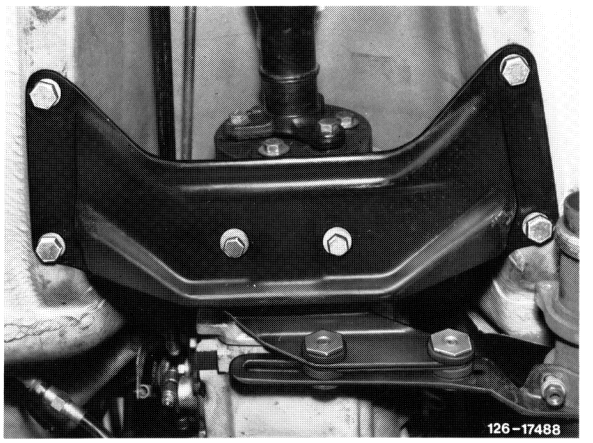

5 Unscrew hex. nut (arrow) and remove engine carrier.

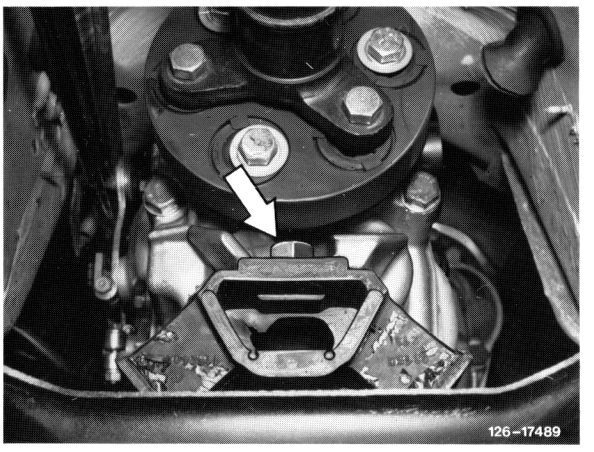

41.1-050/31A1

6 Loosen propeller shaft clamping nut for approx. two turns without sliding back rubber sleeve (sliding along).
Open-end wrench element 126 589 00 01 00.

Installation note
Tightening torque 30 - 40 Nm, while paying attention to correct seat of rubber sleeve.

7 Remove front propeller shaft from transmission (arrows).

Note
Flexible coupling remains on propeller shaft.

Installation note
Renew self-locking hex. nuts.
Tightening torque: M 10 = 45 Nm,
M 12 = 65 Nm.

Use washers with dimensions 10.5x25x1 (on models 126.02 only and on models 126.032/033 up to 08/80).

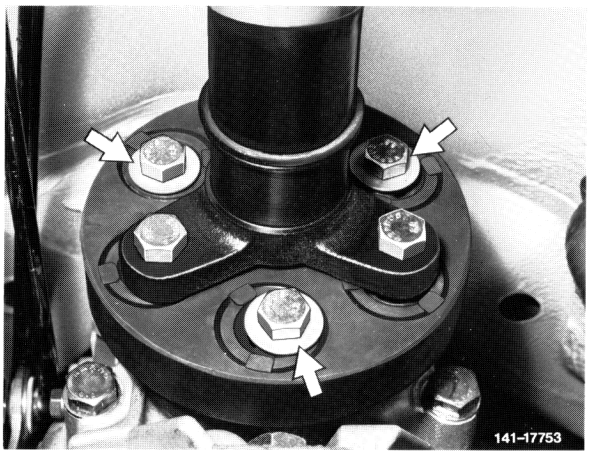

8 On model 126.02 with radially or tangentially soft flexible couplings, loosen vulcanized fitted sleeves of flexible coupling prior to pushing back of propeller shaft in flexible flange (arrows). For this purpose, use a cylindrical mandrel of 10 mm dia. and approx. 150 mm in length.

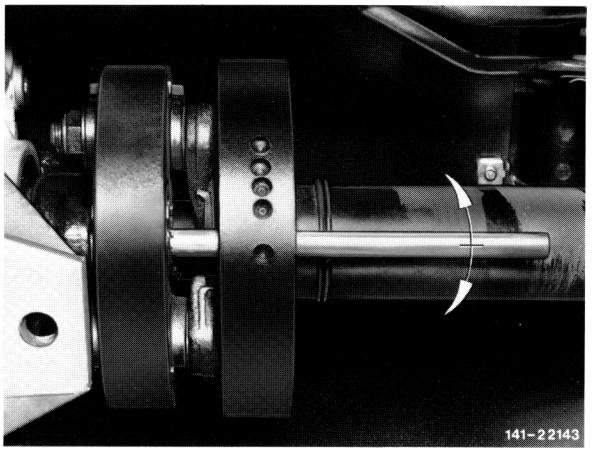

41.1-050/32

9 Remove propeller shaft from rear axle (arrows).

Note
Flexible coupling remains on propeller shaft.

Installation note
Renew self-locking hex. nuts.
Tightening torque: M 10 = 45 Nm,
M 12 = 65 Nm.

Use only washers with dimensions 10.5x25x1 (on models 126.02 only and on models 126.032/033 up to 08/80).

Installation note
On the first vehicles (models 126.03/04 from 09 to 10/85) the three hex. head screws for fastening the flexible coupling to flexible flange must be mounted from the rear to the front for reasons of available space. The hex. head screws can be inserted only if the flexible flange is located at the level of the rear axle housing identified by an arrow.

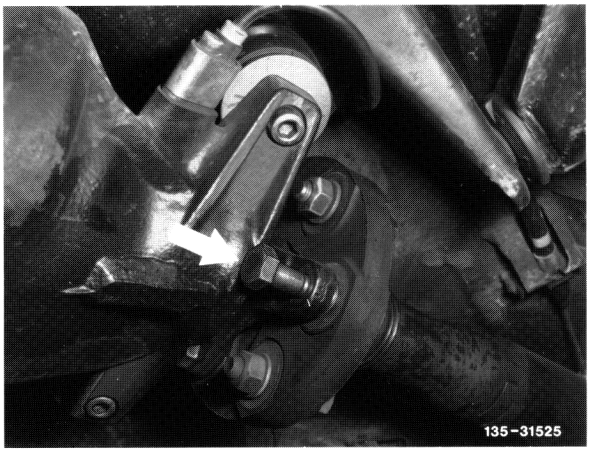

10 Unscrew hex. head screws (arrows) of propeller shaft intermediate bearing on frame floor.

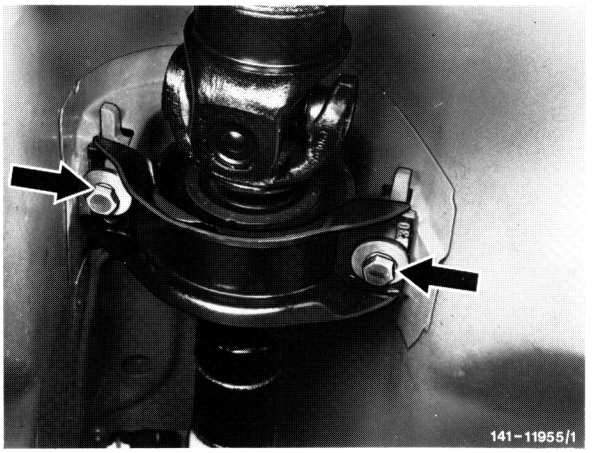

Installation note
Tighten hex. head screws (arrows) only after fastening propeller shaft to transmission and rear axle, tightening torque 25 Nm.

41.1-050/33

11 Force propeller shaft from centering pin on transmission and rear axle and remove in downward direction. Make sure that propeller shaft will not be separated. On models 126.032/033 starting 09/80 and on models 126.036/037 remove propeller shaft owing to larger flexible couplings of 110 mm dia. angularly through the welded-in cross member.

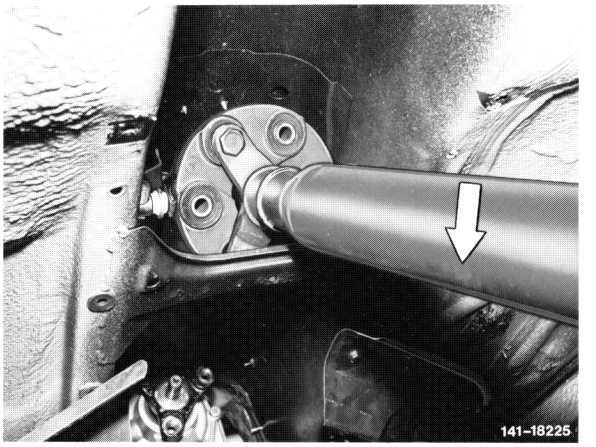

⚠
If a separation of the propeller shaft is required, mark these parts in relation to each other, since the propeller shaft has been balanced in assembled condition.

12 All vehicles starting 08/82 carry an identification mark on front and rear propeller shaft.

The front propeller shaft is provided with a hump and the flexible fork of the rear propeller shaft with two arrow-type humps (arrows). The hump of the front propeller shaft should be located between the two arrows on the flexible fork (arrows).

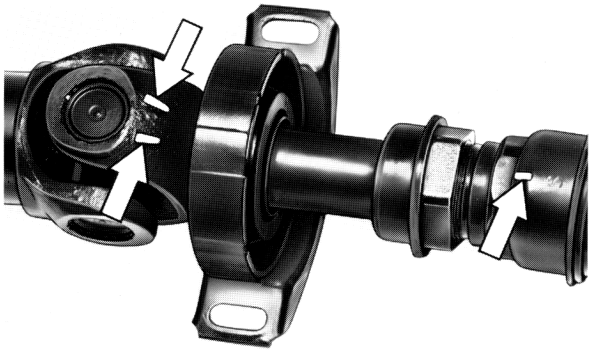

Note
Propeller shafts on which the markings are not identical, should be marked in each case prior to removal.

41.1.050/34

13 Check flexible couplings, centering sleeves and propeller shaft intermediate bearing for wear and renew parts if required.

14 A radially softer flexible coupling (B) is installed at transmission end on models 126.02. This version should be particularly checked for damage in range of fitted sleeves.

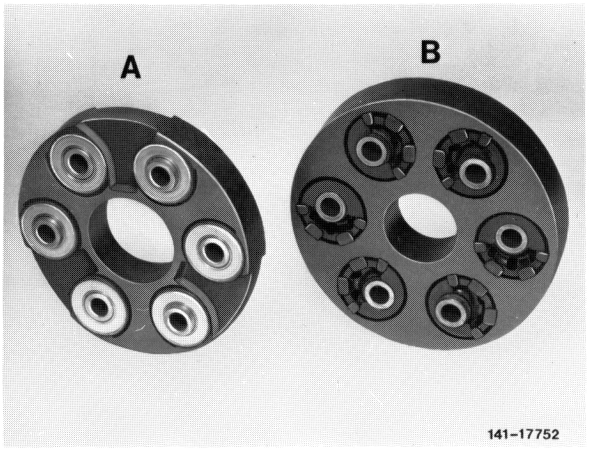

A Flexible coupling at front and rear on models 126.03 with 110 mm bolt circle and at the rear on models 126.02 with 90 mm bolt circle.
B Radially soft flexible coupling, at transmission end only on models 126.02 up to 08/85.

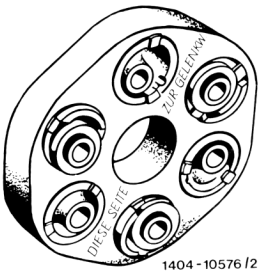

C

C Soft pull-push flexible coupling, at transmission end only on models 126.02 starting 09/85.

15 Model 126.02 with manual 5-speed transmission. If the vibration damper is separated from propeller shaft during renewal, mount vibration damper and three-legged flange as shown.
The installation position is correct, if the arrow of the vibration damper (20) points toward hump on three-legged flange.

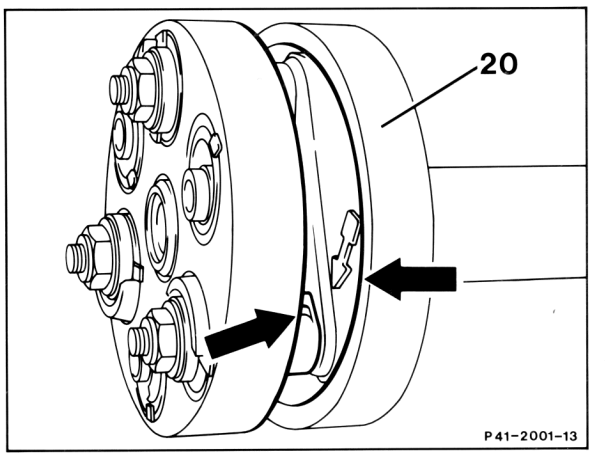

41.1-050/35

16 With plastic or bronze bushings, grease cavities of both centering sleeves with Molykote grease and use multi-purpose grease with multi-component bearing bushings (refer to Specifications for Service Products page 266.2 and 267, filling capacity per sleeve approx. 6 g).

17 For installation proceed vice versa.

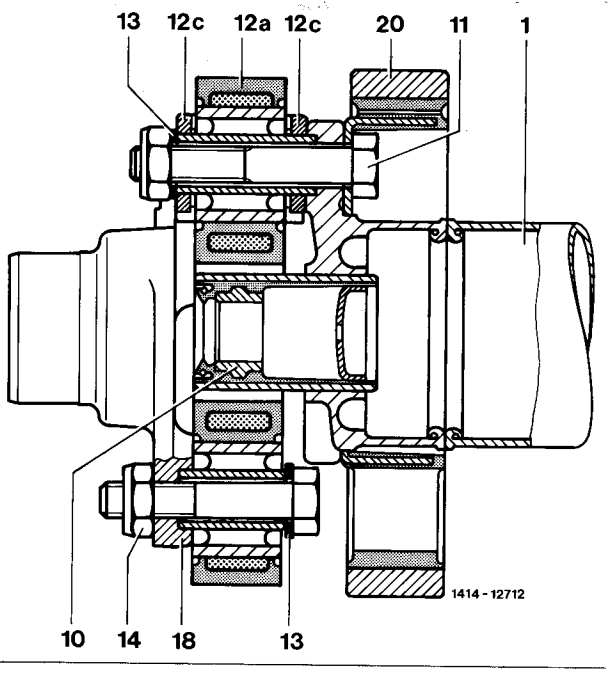

Layout model 126.02 with 90 mm bolt circle dia. and vibration damper on vehicles with manual transmission.

1	Front propeller shaft
10	Centering sleeve
11	Hex. head screw
12	Flexible coupling
12c	Stop washers
13	Washer
14	Self-locking hex. nut
18	Universal flange
20	Vibration damper

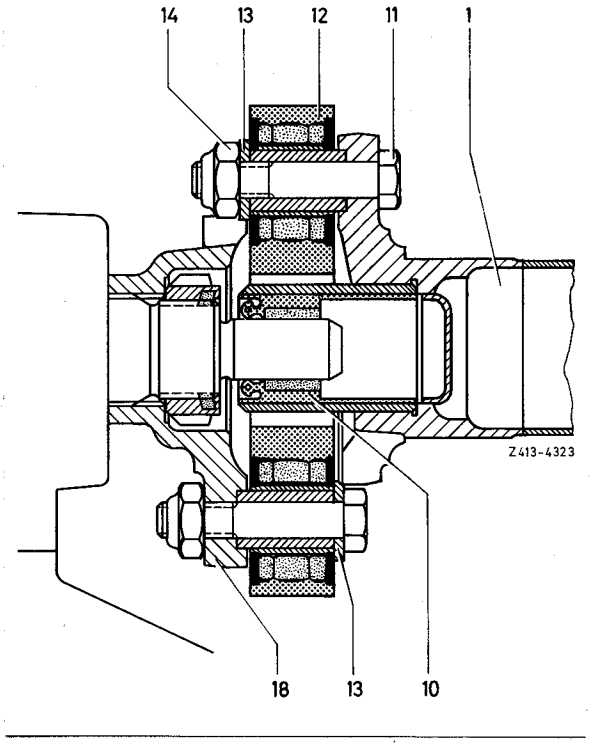

Layout model 126.03/04 with 110 mm bolt circle dia.

1	Front propeller shaft
10	Centering sleeve
11	Hex. head screw
12	Flexible coupling
13	Washer
14	Self-locking hex. nut
18	Universal flange

F. Model 201

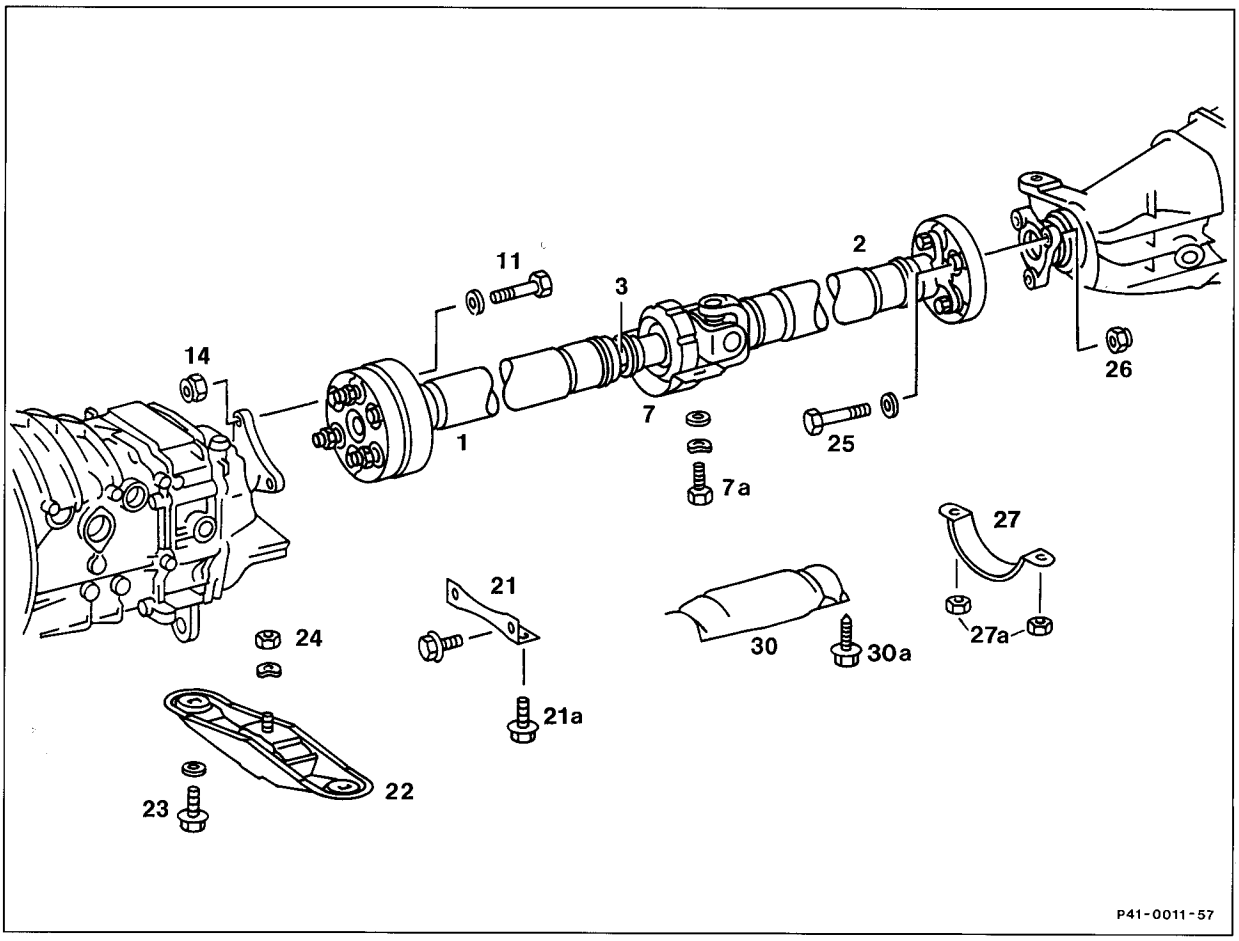

Exhaust shielding plate (30)	screw off and on (item 1).
Transmission	lift, support, lower.
Engine carrier (22)	screw off and on, 45 Nm (item 3).
Starting 09/88 bracket (27)	screw off and on (item 4).
Propeller shaft clamping nut (3)	loosen for approx. two turns, Tightening torque 30 - 40 Nm. Open end wrench element 126 589 00 01 00 (item 5).
Front propeller shaft (1)	remove from and mount on transmission, 45 Nm. Loosen fitted sleeves with mandrel of 10 mm dia. Renew self-locking hex. nuts (14) (item 6).
Rear propeller shaft (2)	remove from and mount on rear axle, 45 Nm. Renew self-locking hex. nuts (26) (item 8).

Propeller shaft intermediate bearing (7)	screw off and on. Tighten hex. head screws (7a) only after fastening propeller shaft to transmission and rear axle, 25 Nm (item 9).
Propeller shaft, complete	force off centering pin on transmission and rear axle and pull out toward the rear.
Centering sleeves	check for wear, with bronze bushings, grease cavities with Molykote grease and use multi-purpose grease with multi-component bearing bushings (refer to Specifications for Service Products page 266.2 and 267, quantity per sleeve approx. 6 g).

Special tools

001 589 66 21 00

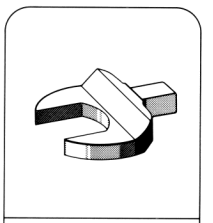

201 589 00 01 00

Removal and installation

1 Unscrew exhaust shielding plate (arrows).

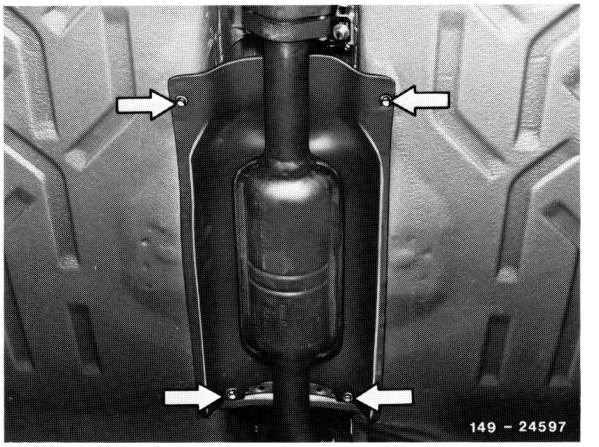

41.1-050/38

2 Lift transmission and support.

3 Unscrew hex. head screws and hex. nut (arrows) and remove rear engine carrier with engine mount.

Installation note
Tightening torque 45 Nm.

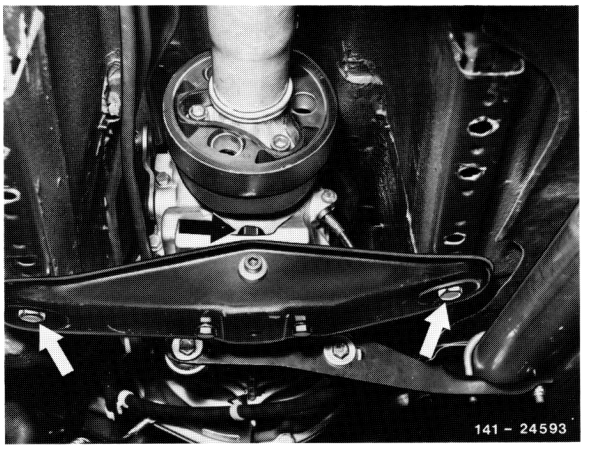

4 Unscrew bracket (27) for fastening seat belt on vehicles starting 09/88.

Installation note
Tightening torque of hexagon nuts 280 Nm.

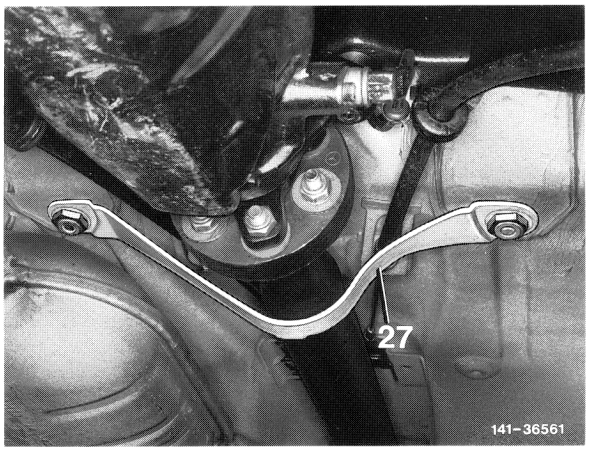

5 Unscrew cross-bridge (21) if installed from tunnel.

Installation note
Tightening torque 25 Nm.

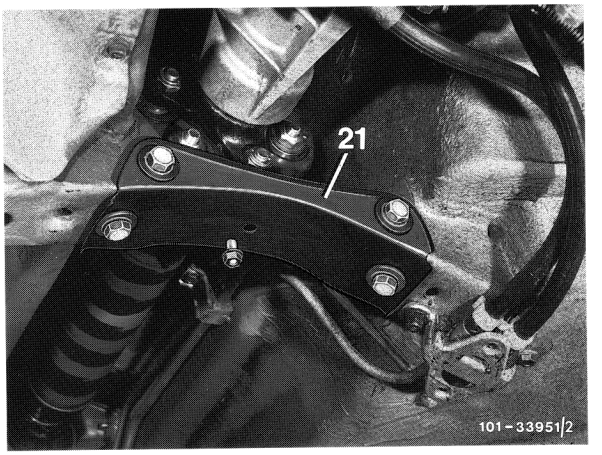

6 Loosen propeller shaft clamping nut for approx. two turns without sliding back rubber sleeve (sliding along).
Open-end wrench element 201 589 00 01 00.

Installation note
Tightening torque 30 - 40 Nm, while paying attention to correct seat of rubber sleeve.

Layout with single-pipe exhaust system

41.1-050/39

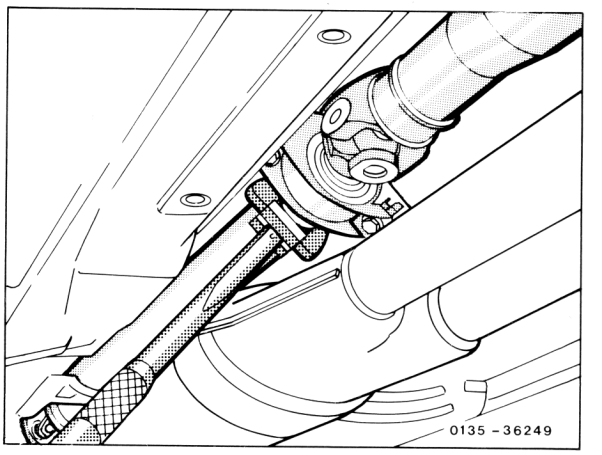

Layout with double-pipe exhaust system

7 Remove front propeller shaft from transmission.

Note
Flexible coupling remains on propeller shaft.

Installation note
Renew self-locking hex. nuts, tightening torque 45 Nm.

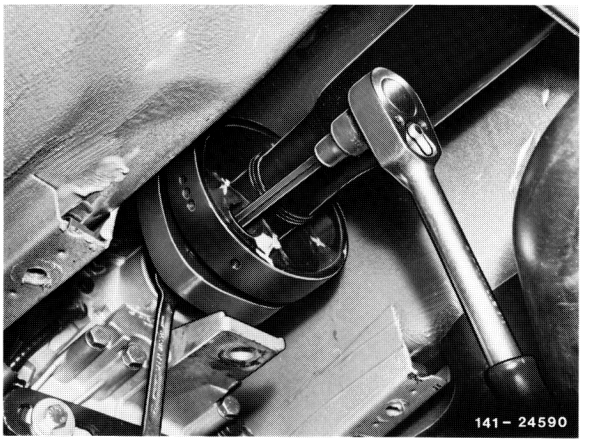

8 Prior to sliding back propeller shaft, loosen fitted sleeves of soft pull-push flexible coupling installed on transmission end by means of a mandrel in the joint flange. For this purpose, use a cylindrical mandrel of 10 mm dia. and approx. 150 mm in length.

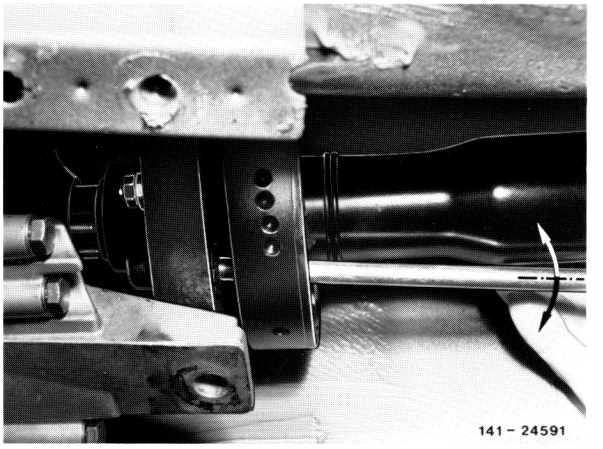

9 Remove propeller shaft from rear axle.

Note
Flexible coupling remains on propeller shaft.

Installation note
Renew self-locking hex. nuts (arrows), tightening torque 45 Nm.

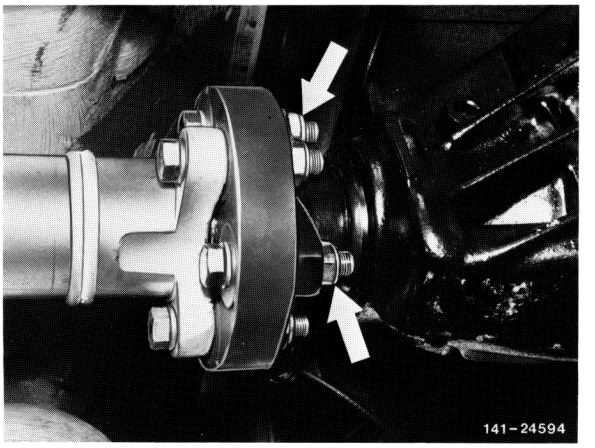

41.1-050/40

10 Unscrew hex. head screws (7a) of propeller shaft intermediate bearing on frame floor.

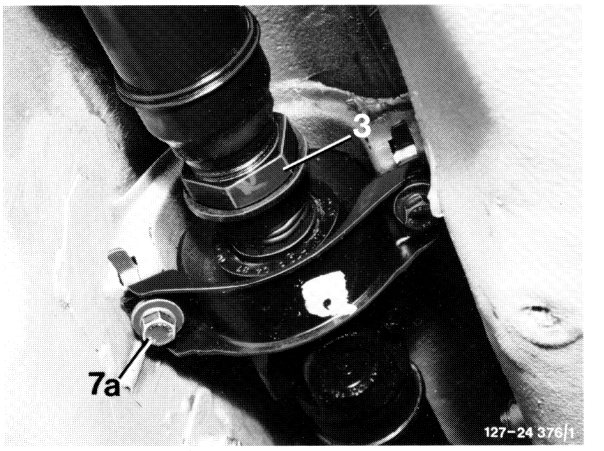

Installation note
Tighten hex. head screws only after fastening propeller shaft on transmission and rear axle, tightening torque 25 Nm.

Note
On vehicles with manual transmission, after tightening transmission propeller shaft connection, pay attention to correct seat of rollers in vibration damper and force in rollers, if required (arrows). die Rollen eindrücken (Pfeile).

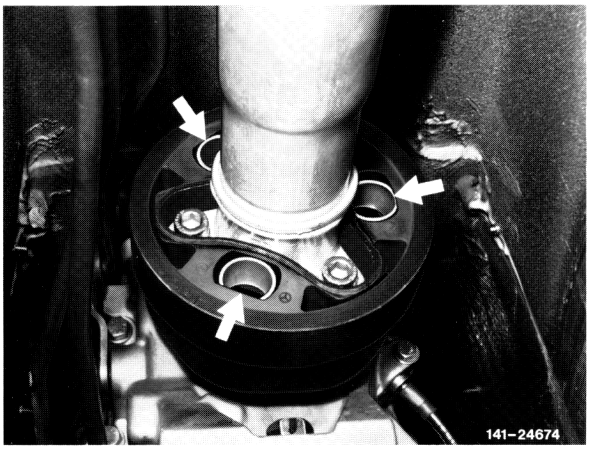

11 Force propeller shaft from centering pin on transmission and rear axle and remove toward the rear.

⚠
If a separation of the propeller shaft is required, reassemble the parts again as shown. The front propeller shaft is provided with a hump and the flexible fork of the rear propeller shaft with two arrow-type humps (arrows). The hump of the front propeller shaft should be located between the two arrows on the flexible fork (arrows).

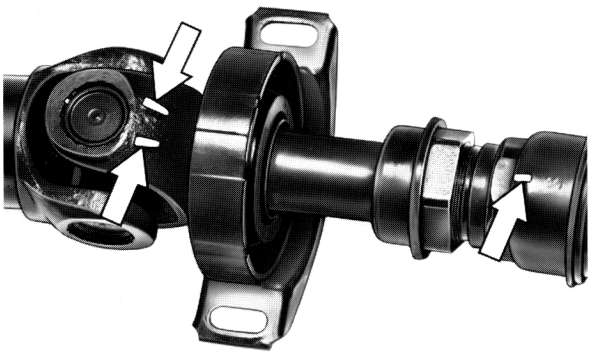

41.1-050/41

12 Check flexible couplings, centering sleeves, vibration damper and propeller shaft intermediate bearing for wear and renew parts if required.

Note

A soft pull-push (tangential) flexible coupling or a hard flexible coupling is installed on transmission end. Special attention should be paid to damage particularly in area of vulcanized fitted sleeves in the case of the soft pull-push flexible coupling.

A Soft pull-push flexible coupling front model 201
B Rear flexible coupling model 201 and model 201.034/035 front and rear

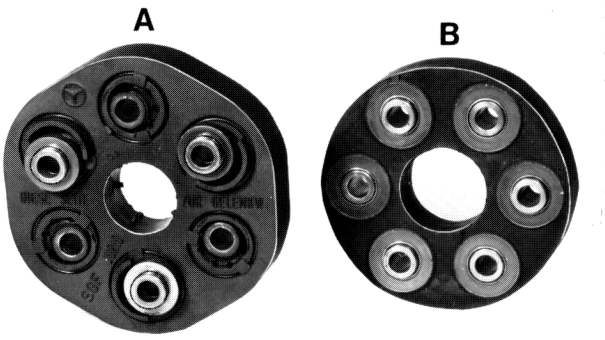

141 - 26418

13 If during renewal of flexible coupling the vibration damper is separated from propeller shaft, mount vibration damper and three-legged flange as shown.

The installation position is correct when the arrow on vibration damper is mounted behind hump on three-legged flange. (Model 201 with a bolt circle diameter of 80 mm).

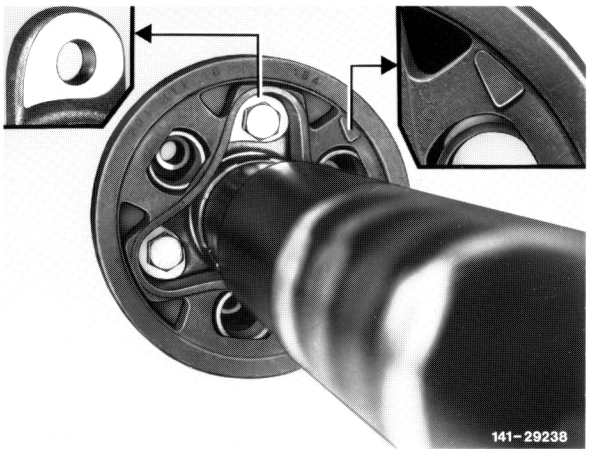

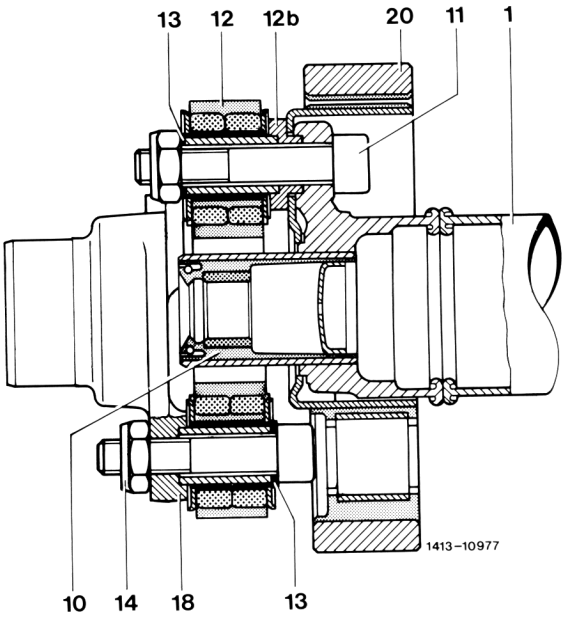

Layout model 201 with 80 mm bolt circle dia.

1	Front propeller shaft
10	Centering sleeve
11	Hex. socket screw
12	Flexible coupling
12b	Centering bushing
13	Washer
14	Self-locking hex. nut
18	Universal flange
20	Vibration damper

14 Model 201 with a bolt circle diameter of 90 mm.

The installation position is correct when the arrow of vibration damper (20) is pointing toward hump on three-legged flange.

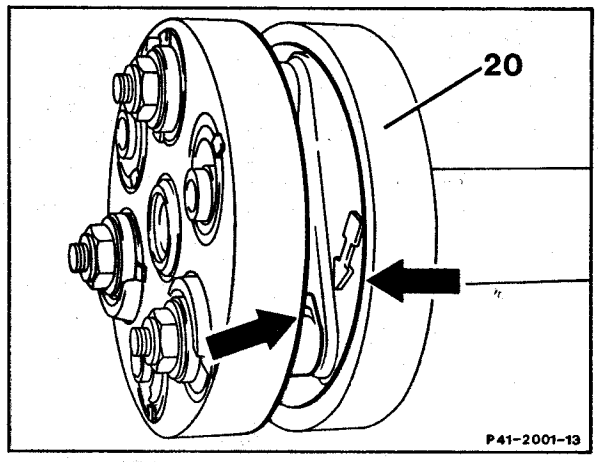

Marking on 1st version up to 12/89

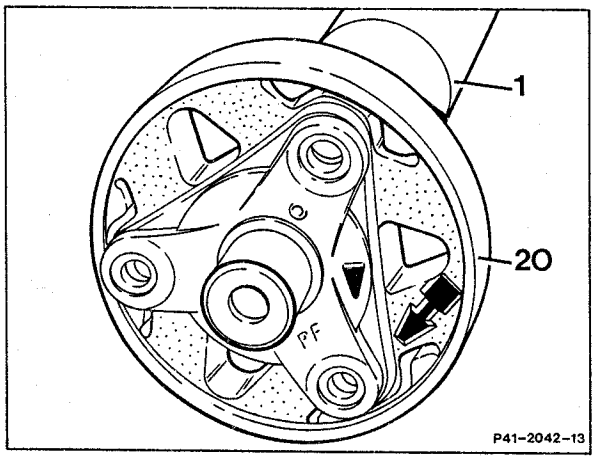

Marking on 2nd version as of 01/90

1 Front propeller shaft

20 Vibration damper

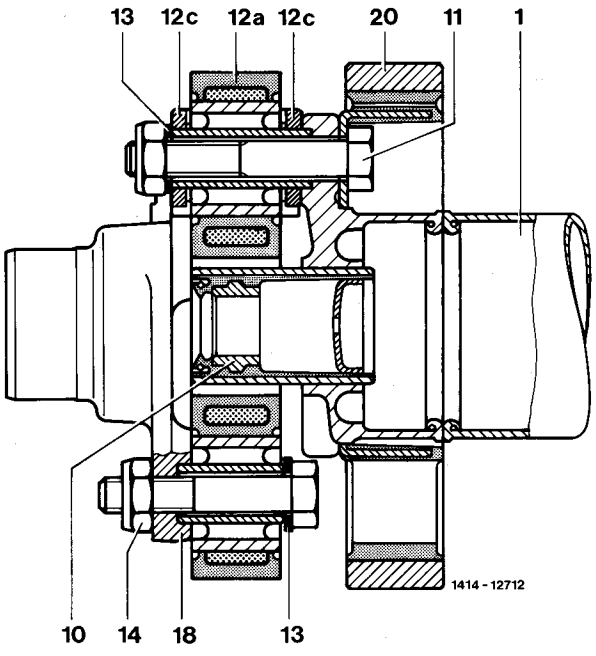

Layout model 201 with 90 mm bolt circle diameter

1 Front propeller shaft
10 Centering sleeve
11 Hex. head screw
12 Flexible coupling
12c Stop washers
13 Washer
14 Self-locking hex. nut
18 Universal flange
20 Vibration damper

15 With bronze bushing, grease cavities of both centering sleeves with Molykote grease and use multi-purpose grease with multi-component bearing bushings (refer to Specifications for Service Products page 266.2 and 267, filling capacity per sleeve approx. 6 g).

16 For installation proceed vice versa.

41-100 Removal and installation of propeller shaft intermediate bearing and renewing of grooved ball bearing

A. Models 107, 114, 115, 116, 123

Lubricant

Clamp connection	refer to Specifications for Service Products page 266.2

Special tools

116 589 03 33 00

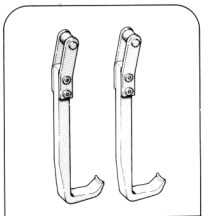

129 589 00 34 00
41

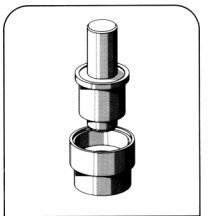

116 589 09 43 00

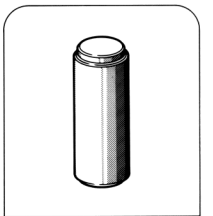

126 589 03 15 00

Note

The propeller shaft components are individually pre-balanced ex factory. To eliminate a residual unbalance which might still be there, the complete propeller shaft including the flexible couplings, is rebalanced. For this reason, when disassembling the complete propeller shaft (e.g. when changing the propeller shaft intermediate bearing) the individual parts must be marked in relation to each other (if no markings are in place) for reassembly as originally planned.

141-12591

41.1-100/1

1 Remove propeller shaft (41-050).

2 On vehicles up to 07/82, mark the individual propeller shaft parts in relation to each other (arrows).

3 On vehicles starting 08/82 the front and rear propeller shaft are drawn in relation to each other (arrows).

Note
The identification has in part already been available on propeller shafts prior to 08/82, but has not been taken into consideration during assembly. For this reason, propeller shafts on which the marking is not in accord, must be marked prior to removal and the two parts must be assembled again according to these marks.

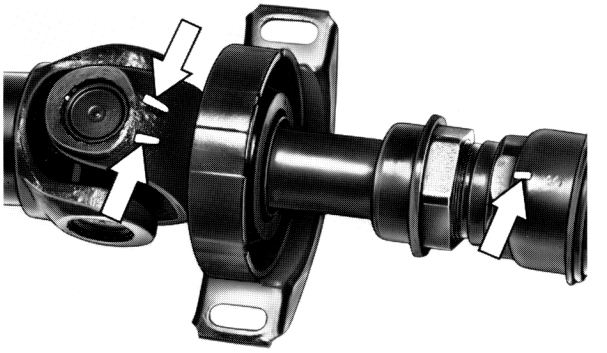

4 Separate front and rear propeller shaft at the clamp connection.

5 Pull off rubber sleeve (3) via serrations.

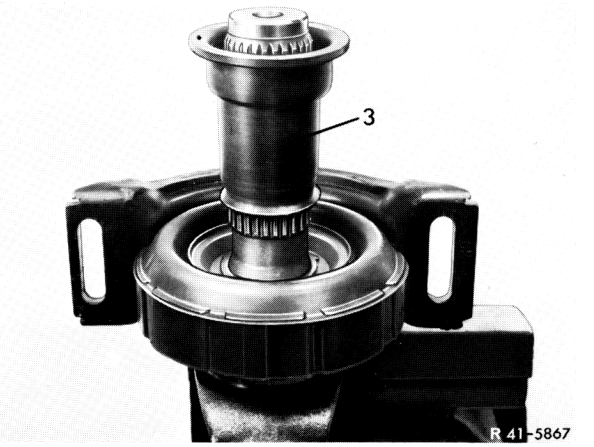

Rubber mount with outer V-fold.

41.1-100/2

6 On vehicles up to 07/82, remove locking ring (5) and remove together with front protective cap (6).

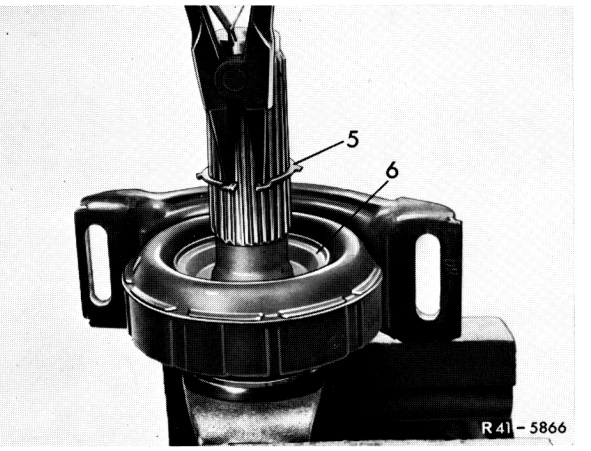

Rubber mount with outer V-fold

7 On vehicles starting 08/82 there is no locking ring but the grooved ball bearing is secured by the protective cap.

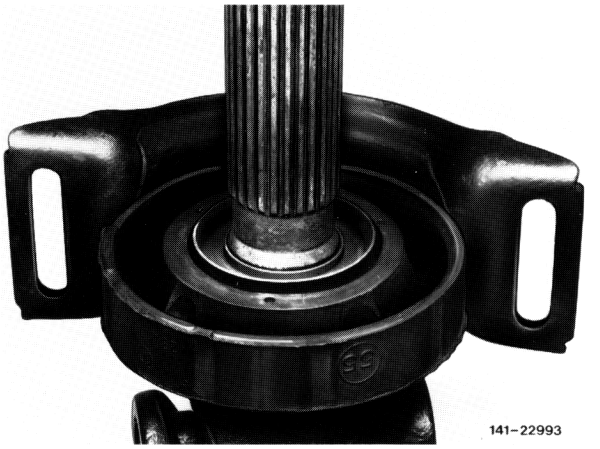

8 On vehicles up to 07/82, pull rubber mount and grooved ball bearing jointly with two-legged puller (1) 000 589 88 33 00 from fork-type joint.

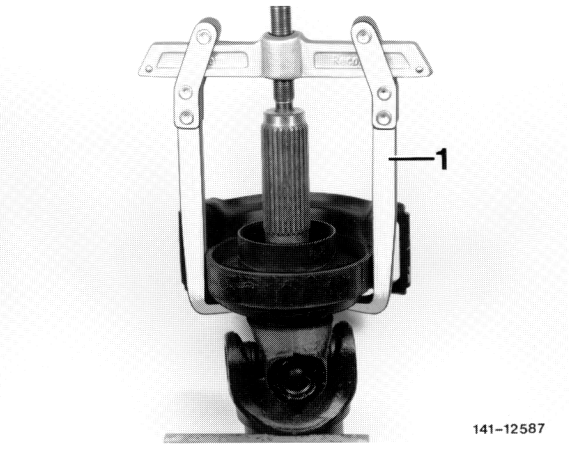

Rubber mount with outer V-fold

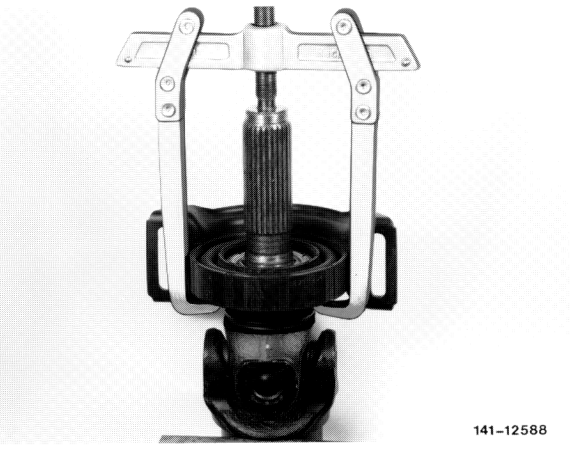

Rubber mount with inner V-fold

41.1-100/3

9 On vehicles starting 08/82, pull rubber mount, grooved ball bearing and protective cap together with two-legged puller and pulling arms 129 589 00 34 00 from fork-type joint.

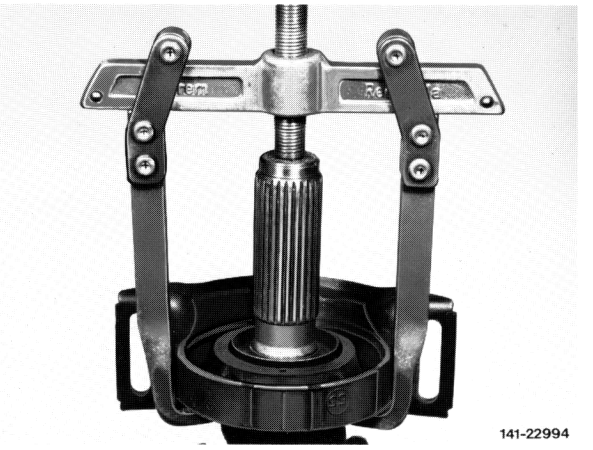

10 Remove rear protective cap on fork-type joint (arrow, installed only on models 107, 116 and 123).

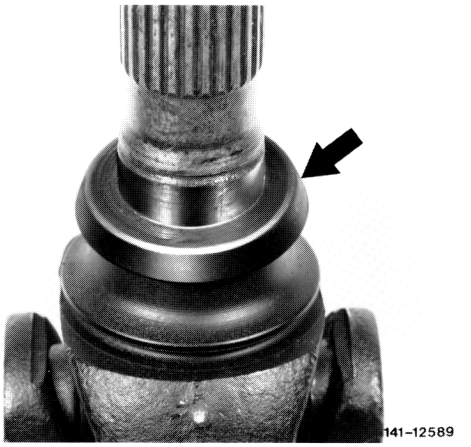

Renewing grooved ball bearing

11 Press grooved ball bearing (8) out of rubber mount (7) by means of removing and installing tool (04) 116 589 09 43 00.

12 Check rubber mount and grooved ball bearing for wear and renew parts, if required.

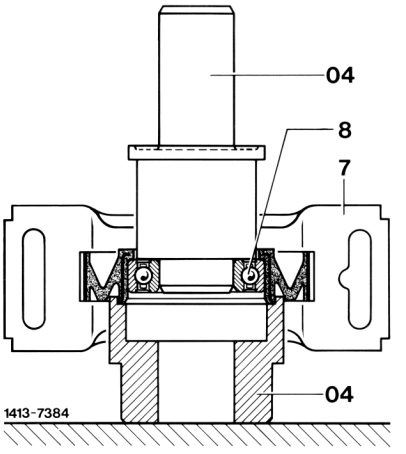

13 Press grooved ball bearing (8) into rubberized bearing seat up to contact surface (arrows).

⚠
Pay attention to correct seat of grooved ball bearing.

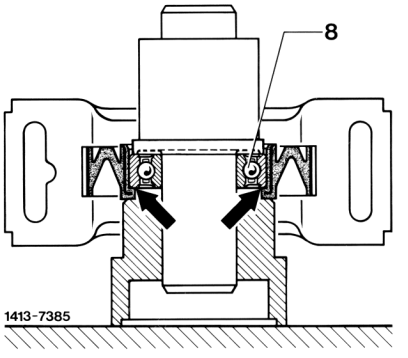

41.1-100/4

Installing propeller shaft intermediate bearing

14 Insert rear protective cap (on models 107, 116 and 123 only).

15 Press rubber mount on fork-type joint with pressing-on sleeve (3) 126 589 03 15 00, while paying attention to correct location of V-fold:

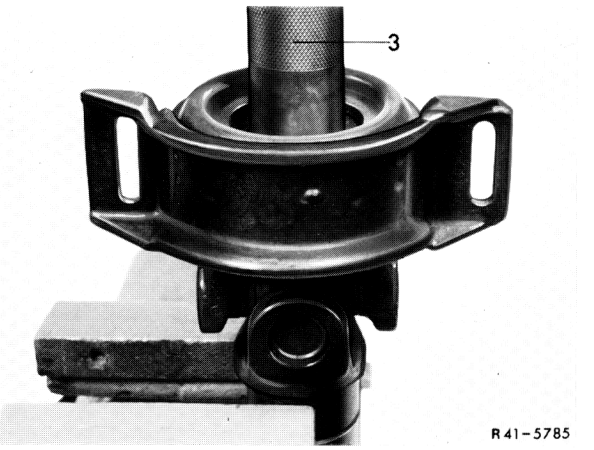

The V-fold of rubber mount on models 107 and 116 of 1st version should point in driving direction.

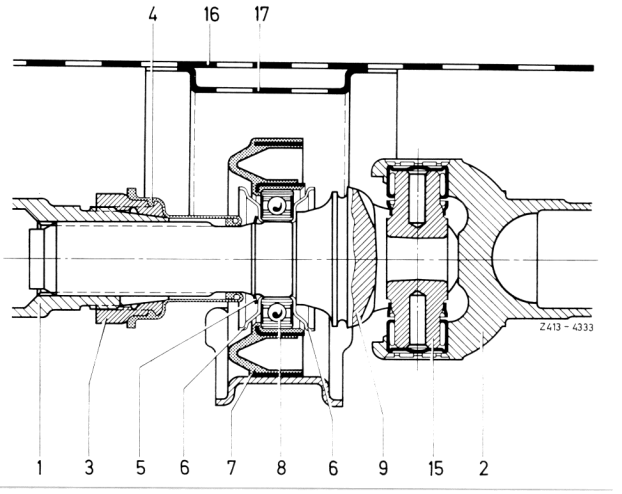

Models 107, 116

1 Front propeller shaft
2 Rear propeller shaft
3 Clamping nut
4 Rubber sleeve
5 Locking ring
6 Protective cap
7 Propeller shaft intermediate bearing
8 Grooved ball bearing
9 Fork-type joint
15 Universal joint star with needle bearing and bushings
16 Frame floor
17 Propeller shaft tunnel

41.1-100/5

On models 114 and 115 with 2-piece propeller shaft, the V-fold should point opposite to driving direction toward the rear.

On 3-piece propeller shaft the V-fold of front rubber mount should point in driving direction and that of rear rubber mount opposite to driving direction.

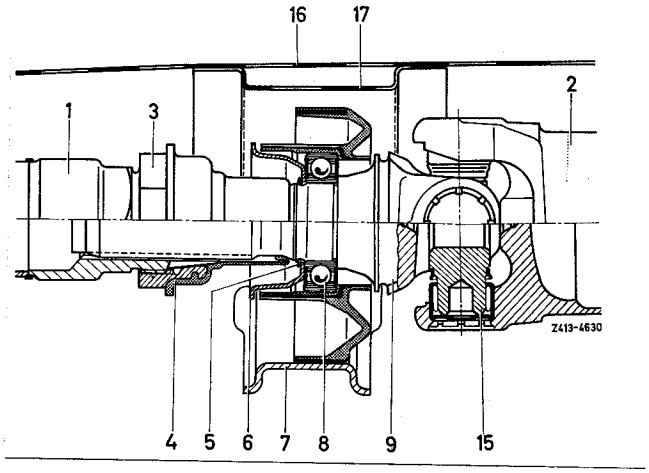

Models 114, 115

1 Front propeller shaft
2 Rear propeller shaft
3 Clamping nut
4 Rubber sleeve
5 Locking ring
6 Protective cap
7 Propeller shaft intermediate bearing
8 Grooved ball bearing
9 Fork-type joint
15 Universal joint star with needle bearing and bushings
16 Frame floor
17 Propeller shaft tunnel

Models 107, 116 of 2nd version and model 123 have a rubber mount with inner V-fold. Install rubber mount in such a manner that the inner V-fold points toward universal joint.

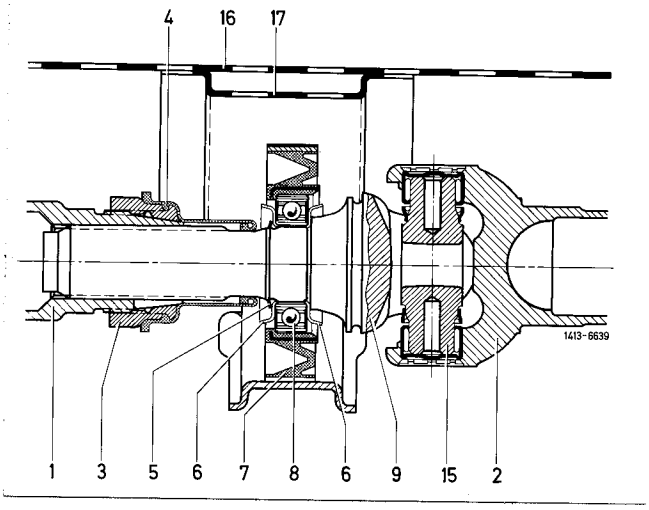

Models 107, 116 2nd version and 123

1 Front propeller shaft
2 Rear propeller shaft
3 Clamping nut
4 Rubber sleeve
5 Locking ring
6 Protective cap
7 Propeller shaft intermediate bearing
8 Grooved ball bearing
9 Fork-type joint
15 Universal joint star with needle bearing and bushings
16 Frame floor
17 Propeller shaft tunnel

16 On vehicles up to 07/82, attach front protective cap.

17 Insert locking ring (5) into groove of fork-type joint in such a manner that the protective cap rests against bearing inner race.

⚠
The inner hump of locking ring points toward protective cap.

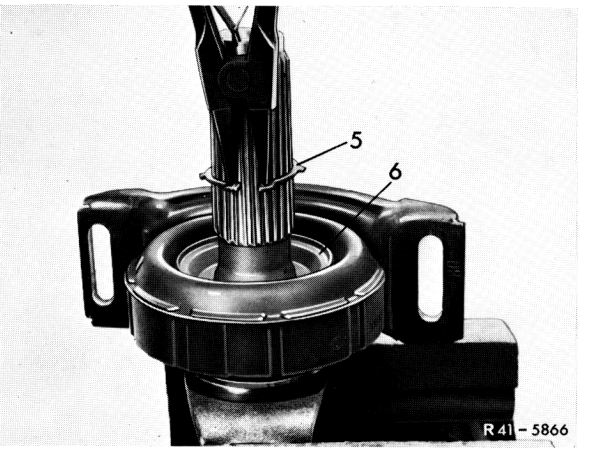

18 On vehicles starting 08/82 mount self-locking protective cap with pressing-on sleeve 126 589 03 15 00 making sure that the protective cap rests against grooved ball bearing (cutout in Fig.).

⚠
Use pressed-on protective cap only once.

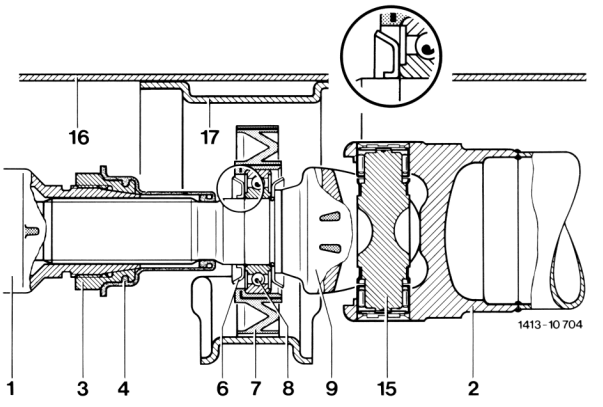

19 Pull rubber sleeve (3) over splining of fork-type joint. Make sure that the rubber sleeve is correctly seated on small diameter.

20 Coat spline shaft profile with the specified grease (refer to Specifications for Service Products page 266.2).

21 On vehicles up to 08/82 plug front and rear propeller shaft together as shown.

41.1-100/7

22 Vehicles starting 08/82 are provided with an identifying mark on front and rear propeller shaft. On front propeller shaft is a hump and on fork-type joint of rear propeller shaft there are two arrow-like humps (arrows). The hump of the front propeller shaft should be located between the two arrows on the fork-type joint (arrows).

23 Install propeller shaft (41-050).

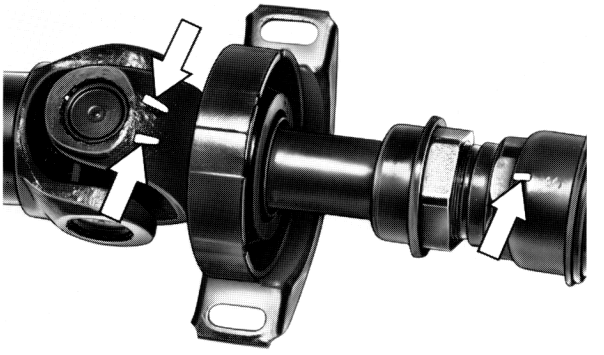

141-23660

B. Model 126

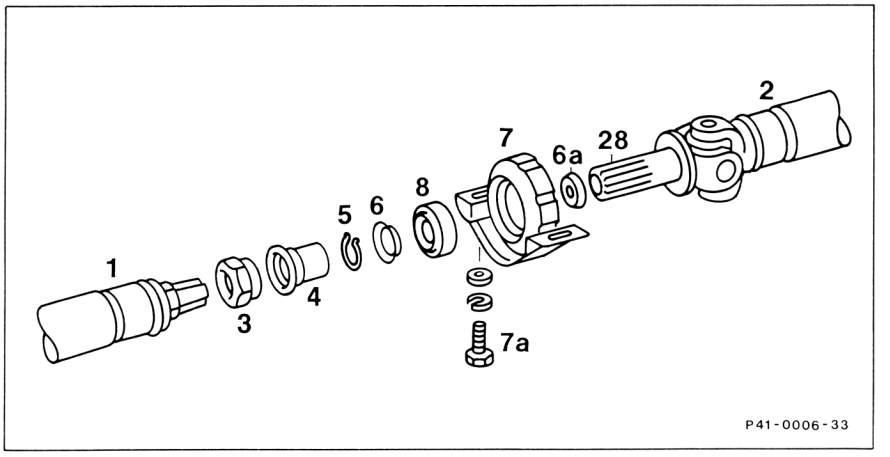

P41-0006-33

Propeller shaft	remove and install (41-050).
Front and rear propeller shaft (1,2)	separate, plug together (item 2).
Rubber sleeve (4)	pull on and off (item 3).
Rubber mount (7) with grooved ball bearing (8) and protective cap (6)	pull off, press on, remove locking ring (5) on vehicles up to 07/82. Two-legged puller 000 589 88 33 00 with pulling arms 129 589 00 34 00, pressing-on sleeve 126 589 03 15 00 (items 4 to 7).
Rear protective cap (6a)	remove, plug on (item 8).

41.1-100/8

Grooved ball bearing (8)	press out of and in rubber mount (7), check and renew if required. Pressing-out, pressing-in tool 116 589 09 43 00 (items 9 to 11).
Spline shaft profile (28)	grease with specified grease (refer to Specifications for Service Products page 266.2).

Special tools

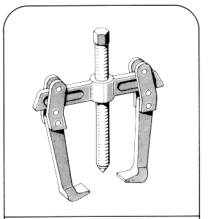

000 589 88 33 00

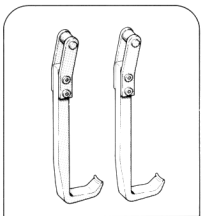

129 589 00 34 00
41

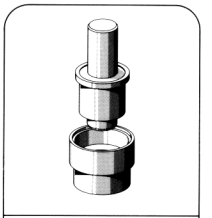

116 589 09 43 00

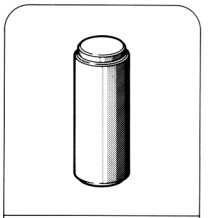

126 589 03 15 00

1 Remove propeller shaft (41-050).

2 Separate front and rear propeller shaft at clamp connection.

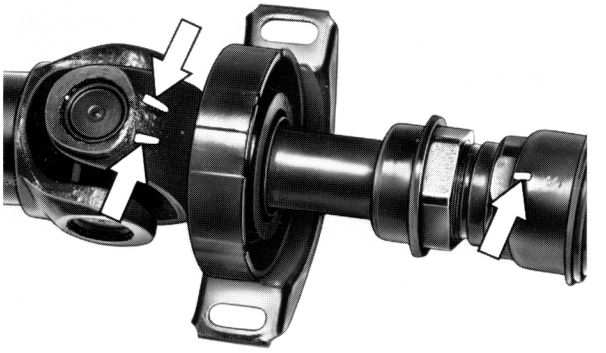

141-23660

Note
On vehicles starting 08/82 the front and rear propeller shaft are shown in relation to each other (arrows).

The propeller shaft components are individually pre-balanced ex factory. To eliminate a residual unbalance which might still be there, the complete propeller shaft including the flexible couplings, is rebalanced. For this reason, when disassembling the complete propeller shaft (e.g. when changing the propeller shaft intermediate bearing) the individual parts must be marked in relation to each other (if no markings are in place) for reassembly as originally planned.

On vehicles up to 07/82, mark the individual propeller shaft parts in relation to each other (arrows).

Installation note
Grease spline shaft profile with specified grease (refer to Specifications for Service Products page 266.2).

3 Pull off rubber sleeve (3) via serrations.

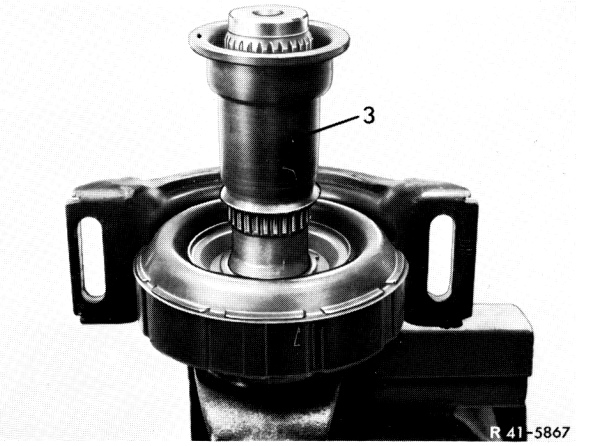

Installation note
Pay attention to correct seat of rubber sleeve on small diameter.

4 On vehicles up to 07/82, pull rubber mount and grooved ball bearing together with two-legged puller 000 589 88 33 00 from fork-type joint.

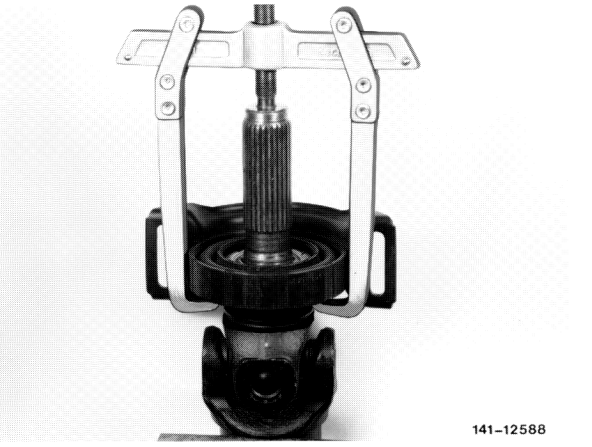

41.1-100/10

Note
On vehicles up to 07/82, remove locking ring (5) and remove together with front protective cap (6).

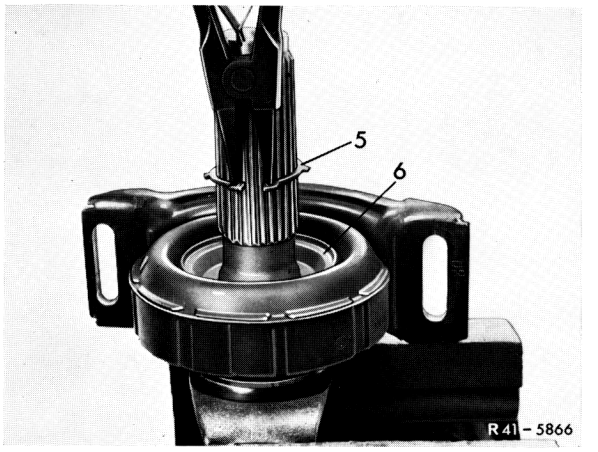

Installation note
Insert locking ring (5) into groove of fork-type joint in such a manner that the protective cap rests against bearing inner race.
The inner hump of the locking ring points toward protective cap.

5 On vehicles starting 08/82, pull rubber mount, grooved ball bearing and protective cap together from fork-type joint by means of two-legged puller 000 589 88 33 00 and pulling arms 129 589 00 34 00 from fork-type joint.

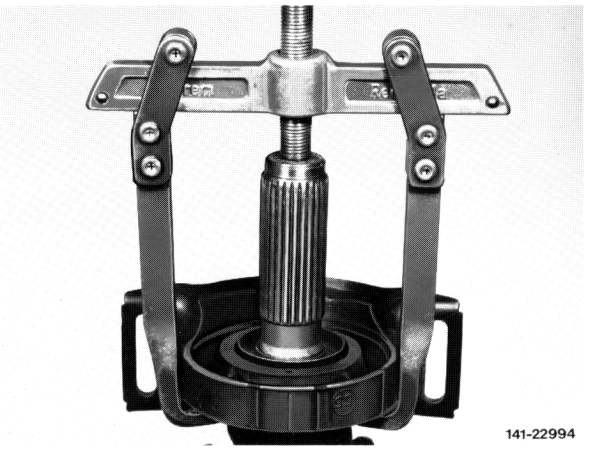

Note
On vehicles starting 08/82, the grooved ball bearing is secured by the protective cap.

Installation note
Press rubber mount by means of pressing-on sleeve (3) 126 589 03 15 00 onto fork-type joint, while paying attention to correct location of V-fold.

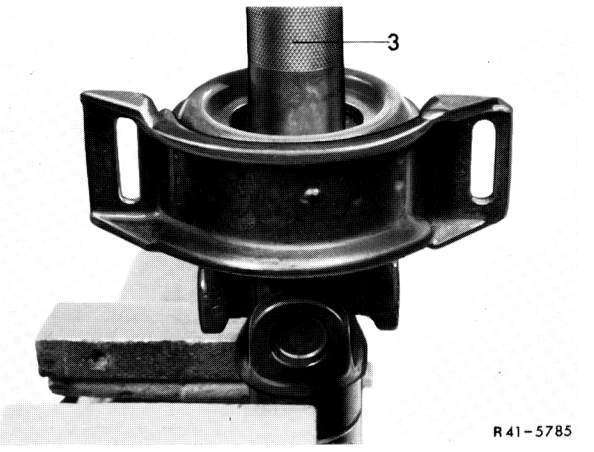

41.1-100/11

6 Install rubber mount with inner V-fold. Install rubber mount in such a manner that the inner V-fold points toward universal joint.

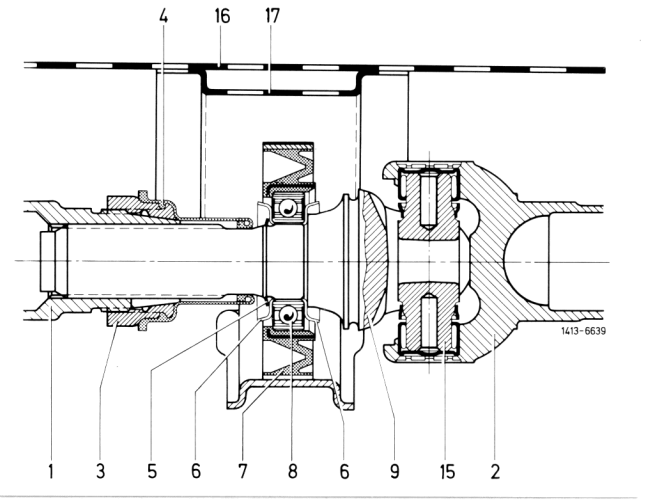

1st version up to 07/82

1 Front propeller shaft
2 Rear propeller shaft
3 Clamping nut
4 Rubber sleeve
5 Locking ring
6 Protective cap
7 Propeller shaft intermediate bearing
8 Grooved ball bearing
9 Fork-type joint
15 Universal joint star with needle bearing and bushings
16 Frame floor
17 Propeller shaft tunnel

7 Mount self-locking protective cap (on vehicles starting 08/82) with pressing-on sleeve 126 589 03 15 00 making sure that the protective cap rests against grooved ball bearing (8) (cutout in Fig.).

⚠
Use pressed-on protective cap only once.

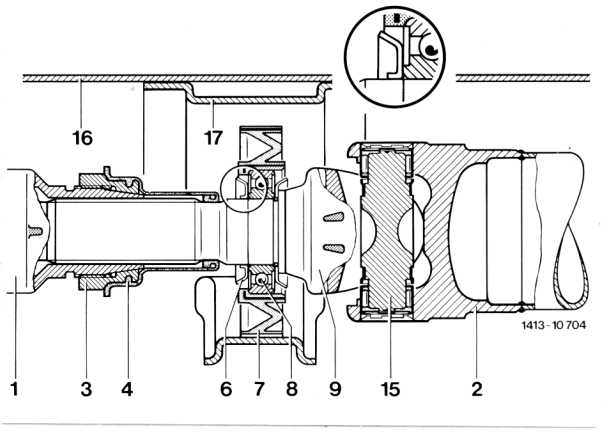

8 Remove rear protective cap (arrow) from fork-type joint.

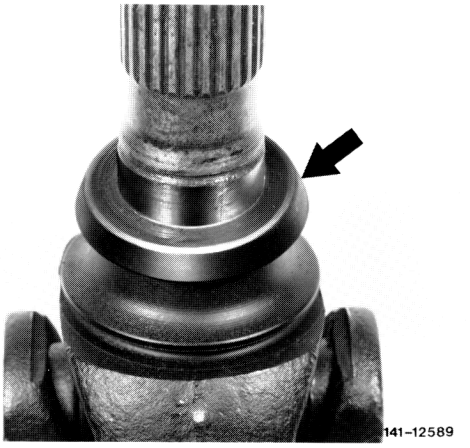

41.1-100/12

Renewing grooved ball bearing

9 Press grooved ball bearing (8) with removing and pressing-in tool (04) 116 589 09 43 00 out of rubber mount (7).

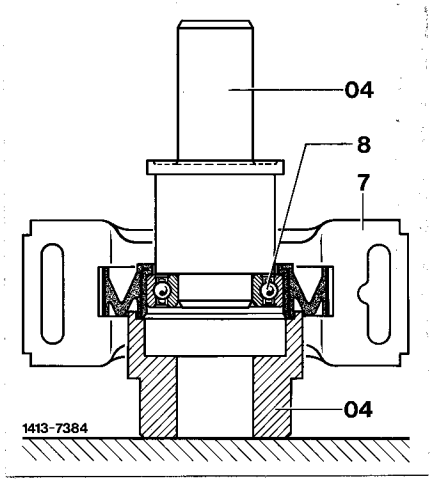

10 Check rubber mount and grooved ball bearing for wear and renew parts, if required.

11 Press grooved ball bearing (8) into rubberized bearing seat up to contact surface (arrows).

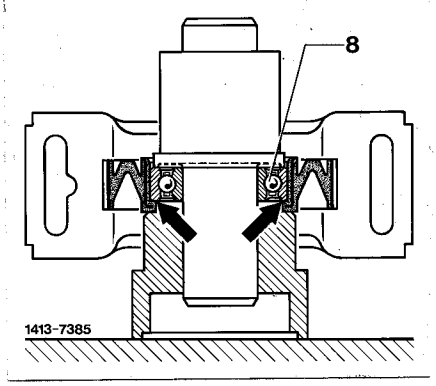

Note
Pay attention to correct seat of grooved ball bearing.

12 For further installation proceed vice versa starting at item 8.

C. Models 124, 129, 201

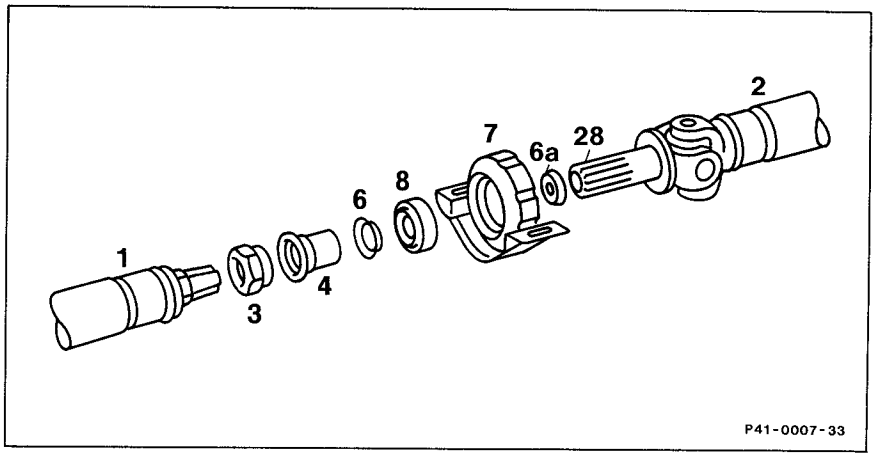

Propeller shaft	remove and install (41-050).
Front and rear propeller shaft (1, 2)	separate, plug together (item 1).
Rubber sleeve (4)	pull on and off (item 3).
Rubber mount (7) with grooved ball bearing (8) and protective cap (6)	pull off, press on. Two-legged puller 000 589 88 33 00 with pulling arms 129 589 00 34 00 pressing-on sleeve 201 589 07 15 00 or 126 589 03 15 00 (items 4, 5).
Rear protective cap (6a)	remove, plug on (item 6).
Grooved ball bearing (8)	press out of and into rubber mount (7), check and renew parts if required. Pressing-out, pressing-in tool 201 589 09 43 00 or 116 589 09 43 00 (items 7 to 9).
Spline shaft profile (28)	grease with specified grease (refer to Specifications for Service Products page 266.2).

Special tools

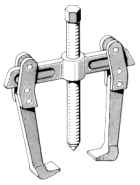

000 589 88 33 00

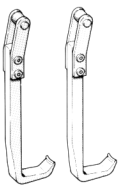

129 589 00 34 00
41

116 589 09 43 00

126 589 03 15 00

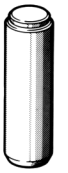

201 589 07 15 00

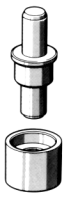

201 589 09 43 00

1 Remove propeller shaft (41-050).

2 Separate front and rear propeller shaft at clamp connection.

Installation note

The front and rear propeller shaft are correctly plugged together when the hump of the front propeller shaft is located between the two arrows of the rear propeller shaft (arrow). Coat spline shaft profile with specified grease.

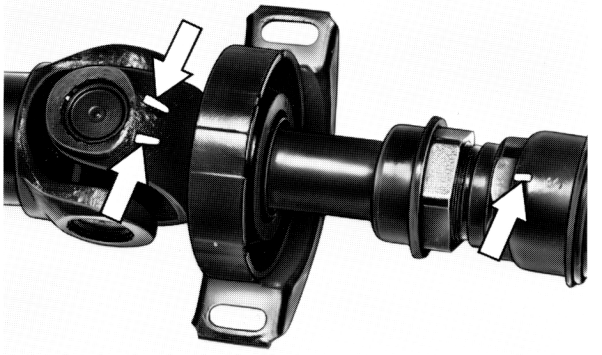

141-23660

3 Pull off rubber sleeve (4) via serrations.

Installation note
Pay attention to correct seat of rubber sleeve on small diameter.

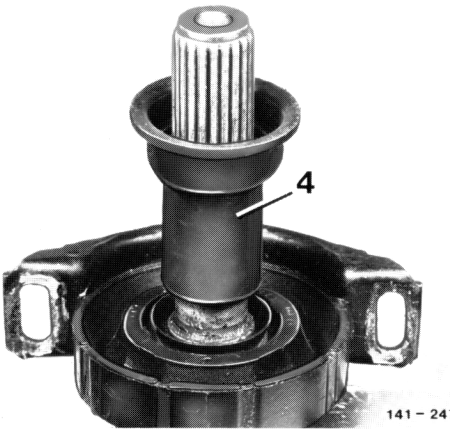

4 Pull rubber mount with grooved ball bearing and protective cap jointly from fork-type joint by means of two-legged puller 000 589 88 33 00 and pulling arms 129 589 00 34 00

Installation note
Press rubber mount on fork-type joint by means of pressing-on sleeve (05) 201 589 07 15 00 or 126 589 03 15 00, paying attention to correct location of V-fold.

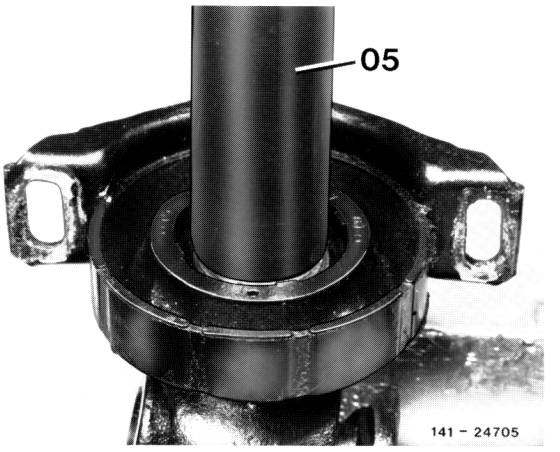

5 Mount self-locking protective cap (6) with pressing-on sleeve (05) 201 589 07 15 00, while making sure that the protective cap rests against grooved ball bearing.

⚠
Use pressed-on protective cap only once.

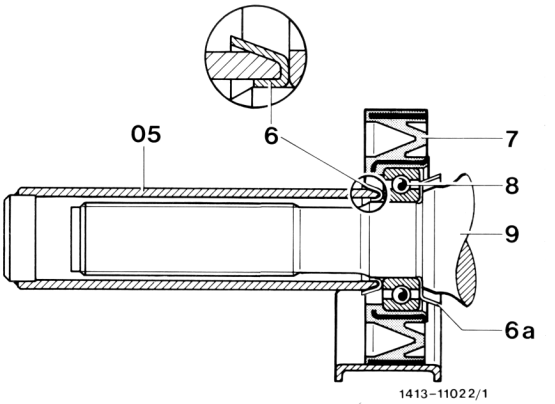

41.1-100/16

6 Remove rear protective cap on fork-type joint (arrow).

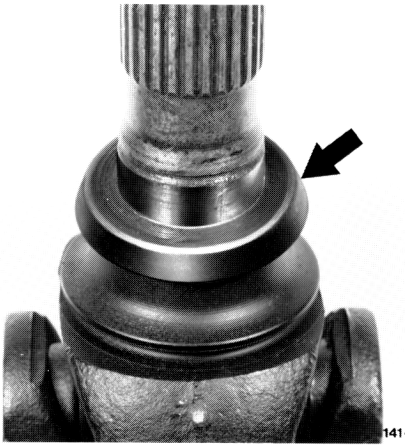

Renewing grooved ball bearing

7 Press grooved ball bearing (8) with removing and pressing-in tool (04) 201 589 09 43 00 out of rubber mount (7) for small grooved ball bearing and 126 589 09 43 00 for large grooved ball bearing.

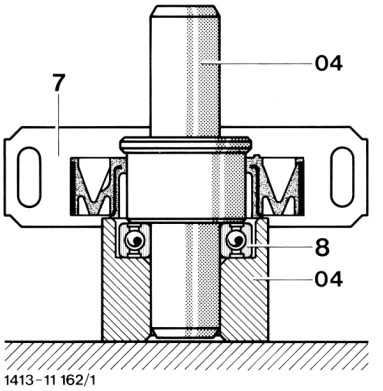

8 Check rubber mount and grooved ball bearing for wear and renew parts, if required

9 Press grooved ball bearing (8) into rubberized bearing seat up to contact surface (arrows).

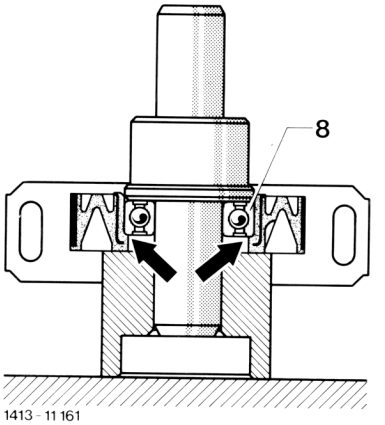

Note
Pay attention to correct seat of grooved ball bearing.

10 For further installation proceed vice versa starting at item 6.

41.1-100/2

Complaint:

1

Humming at decel, speed range from 120 km/h to 90 km/h
Model 116 with engine 110 and automatic transmission

Cause/Remedy:

Buckling angle of rear propeller shaft too large owing to unfavorably coinciding tolerances.

Change buckling angle on rear propeller shaft by adding washers (3 mm thick) at rear studs between rear axle carrier and rear axle center piece.

Renew rear flexible coupling, if badly distorted.

Complaint:

Acceleration juddering in the speed range of 15-20 km/h or 30-50 km/h
Models 114/115 and 116.02

Cause

1. The articulation angle of the universal joint on the propeller shaft intermediate bearing is excessive in the speed range of 15 - 20 km/h.

Remedy

a) **On models 114/115**

Mount shims of a suitable height of 2-6 mm between the rear engine mount and frame floor.
Shims are to be shop-made (figure 1).
Hexagon bolts are to be extended corresponding to the shim thickness.

Note

At full steering lock, there must still be a **minimum clearance of 5 mm** between the drag link and oil pan. If this minimum distance is not maintained, both front engine mounts are to be checked or replaced.

b) **On model 116.02**

Replace 10 mm aluminum shims between the rear engine mount and rubber mount by a 6 mm or 4 mm aluminum washer (take bolt length into account appropriately).
On models 116.020/024/025 it may be necessary to remove any 4 mm aluminum shim (figure 2, item 5).

2. Juddering when accelerating between 30 - 50 km/h is caused by uneven coiled thread fiber packs in the flexible coupling.

Remedy

Replace front and rear flexible couplings.

Figure 1

A = Shim (shop-made)

Dimension "a" = 2-6 mm

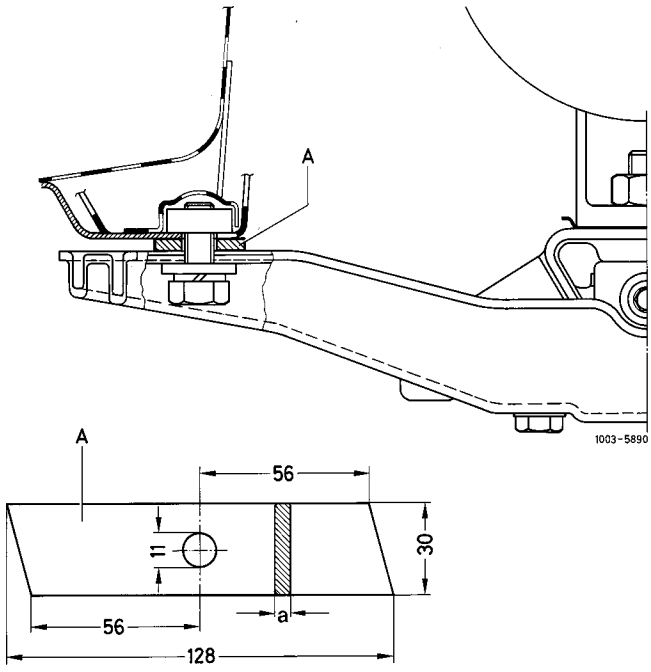

Figure 2

5 Aluminum shim

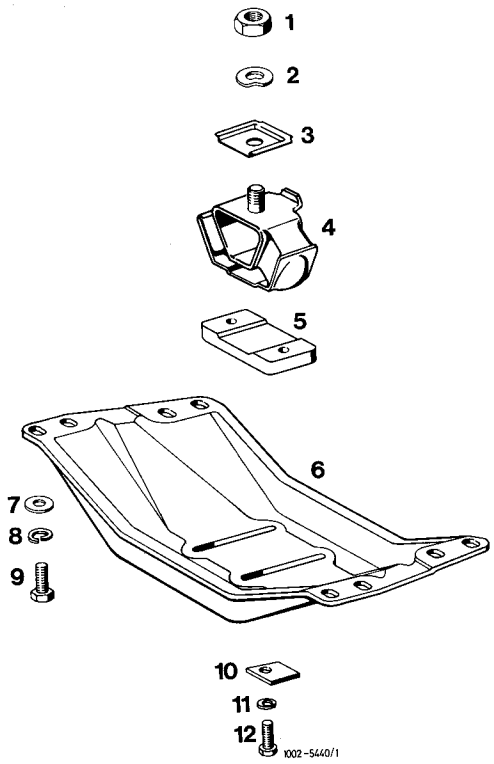

Complaint:

Humming noises with rough spots in the speed range between 100 and 160 km/h
Model 124

Cause/Remedy:

Summation of residual imbalance of the rear propeller shaft and joint flange of the rear axle.

Determine imbalance as described in 41-080 and eliminate.

Complaint:

Intermittent humming (interference) in the speed range between 160 - 180 km/h
Models 124.023/083, 201.02 with transmission 722.4

Cause
Unfavourable coincident frequencies (vibrations) from engine and tires and slip at the convertor.

Remedy
An improvement can be achieved:
1. If the converter is turned through 120° (max. twice) at the driver plate.
2. On models 124.023/083 and 201.029 by installing the rear engine mount, part no. 123 240 13 18 or 123 240 20 18, bracket 201 242 00 40, bolt 000912 008124, washer 201 242 00 66 and threaded nut in bracket 124 242 00 72.
On model 201.02 (except for 201.029) by installing a rear engine mount, part no. 123 240 13 18 or 123 240 20 18, engine support 201 242 06 01 with bolt 000912 008124, washer 201 242 00 66 and nut 000934 008042.

Note
When installing the rear engine mount with adjusting screw, the engine mount must be readjusted or relieved of load after approx. 1000 km.

Complaint:
Drive line vibrations in overrun conditions from higher speeds. Leakage at the rear transmission cover. Fracture of exhaust pipes.
Models 124, 201 with transmission 716, 717 (up to 08/88).

Cause
Centering of the front propeller shaft possibly not in order.
Remedy
Check condition of centering sleeve of the front propeller shaft and, if necessary, install compound bearing centering sleeve (for part no., refer to microfiche). If the larger inside dia. of the bronze bush is more than 16.5 mm, replace front propeller shaft. On vehicles with 5-cylinder diesel engines, generally replace the front propeller shaft with 1st version of the vibration damper (approx. 150 mm dia.) for the current version (approx. 135 mm dia.) (refer to technical modifications).

Complaint:

Wear at the front flexible coupling.
Models 107, 124, 126 and 201

Caise
Clamped connection of propeller shaft overtightened, preventing any longitudinal compensation.
Remedy
Do not exceed tightening torque of 30 - 40 Nm for the propeller shaft clamping nut.

Complaint:
Rumbling/rattling in the no-load condition in the engine speed range between 3200-3800 rpm.
Model 201.018 with 4- or 5-speed manual transmission (up to 09/90, refer to technical modifications)

Remedy
Install a soft pull-push flexible coupling in place of the torsionally rigid (hard) version, repair kit part no. 124 410 01 15. At the same time a new centering sleeve, part no. 124 410 07 32, must be installed. Installed dimension "a" is 30 mm (refer to figure, 41-200).

⚠
A new front propeller shaft, part no. 201 410 76 01, must be installed on vehicles with 5-speed manual transmission.

Note
A soft pull-push flexible coupling has already been installed since October 1990. No improvement results from a further replacement of the flexible coupling.

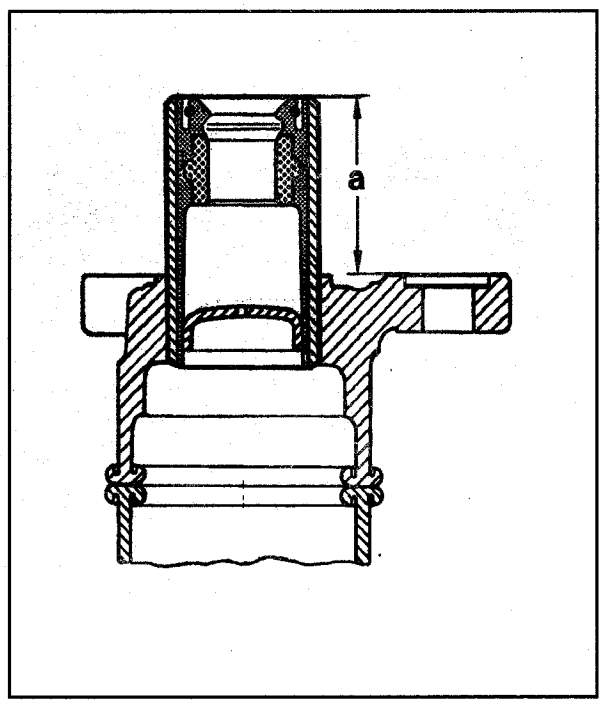

P41-5033-15

Complaint:

Vibration or booming complaints on vehicles with dual-mass flywheel.

Typ 124, 201

Cause

Vibration damper or front propeller shaft may be installed with incorrect setting.

Check

Whether the approved propeller shaft is installed. On vehicles with 4-/5-cylinder engine, a vibration damper with an outside diameter of 133 mm must be installed on the propeller shaft flange on transmission end.

No vibration damper may be installed on vehicles with 6-cylinder engine.

Remedy

Replace front propeller shaft (for part no., refer to microfiche), if necessary.

Complaint:

Booming (rumbling) in the speed range from 110 km/h to 150 km/h.

Models 124, 201

Cause

Vibrations in drive line due to unfavourable, coincident production tolerances.

Abhilfe

1.First rotate the 3-legged flange of the propeller shaft connection on transmission end in relation to the propeller shaft by 120° (max. twice). If there is no improvement, then also rotate the propeller shaft on rear axle end through 120° in relation to the joint flange.

2.Balance propeller shaft on the vehicle (41-080).

3.Screw vibration damper, part no. 124 350 03 72 (1st version) onto the rear mounting of the rear axle center piece assembly (refer to figure). Tightening torque 150 ± 10 Nm.

Note

As of 01/90, there are matching points (white colour identification) on the flexible couplings and on the joint flange of the transmission or rear axle center piece assembly as a standard production feature.

As of 09/91, there are no longer matching points on the flexible couplings.

Reason: balance quality of propeller shafts improved.

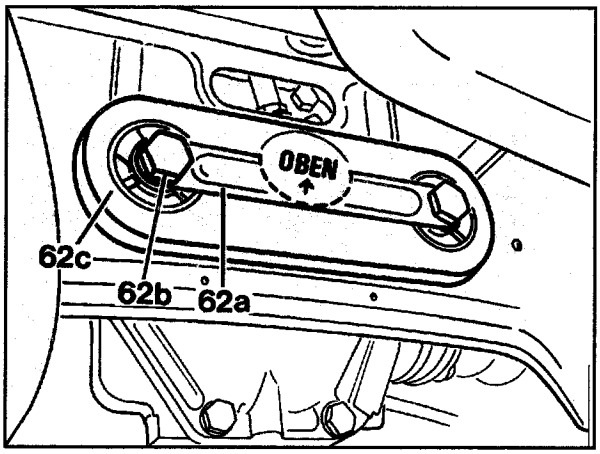

P41-2045-13

⚠

On all T-saloons **with auxiliary heater, no damper** may be assembled on the rear axle.

On all T-saloons, only the 2nd version of the damper may be installed in conjunction with the adapter holder (for part no., refer to parts microfiche).

43–0023 Testing check valve

Preceding work:
Check brake system for leakage using pressure tester (42–0015).

Operation no. of operation texts and work units or standard texts and flat rates:
43–1051

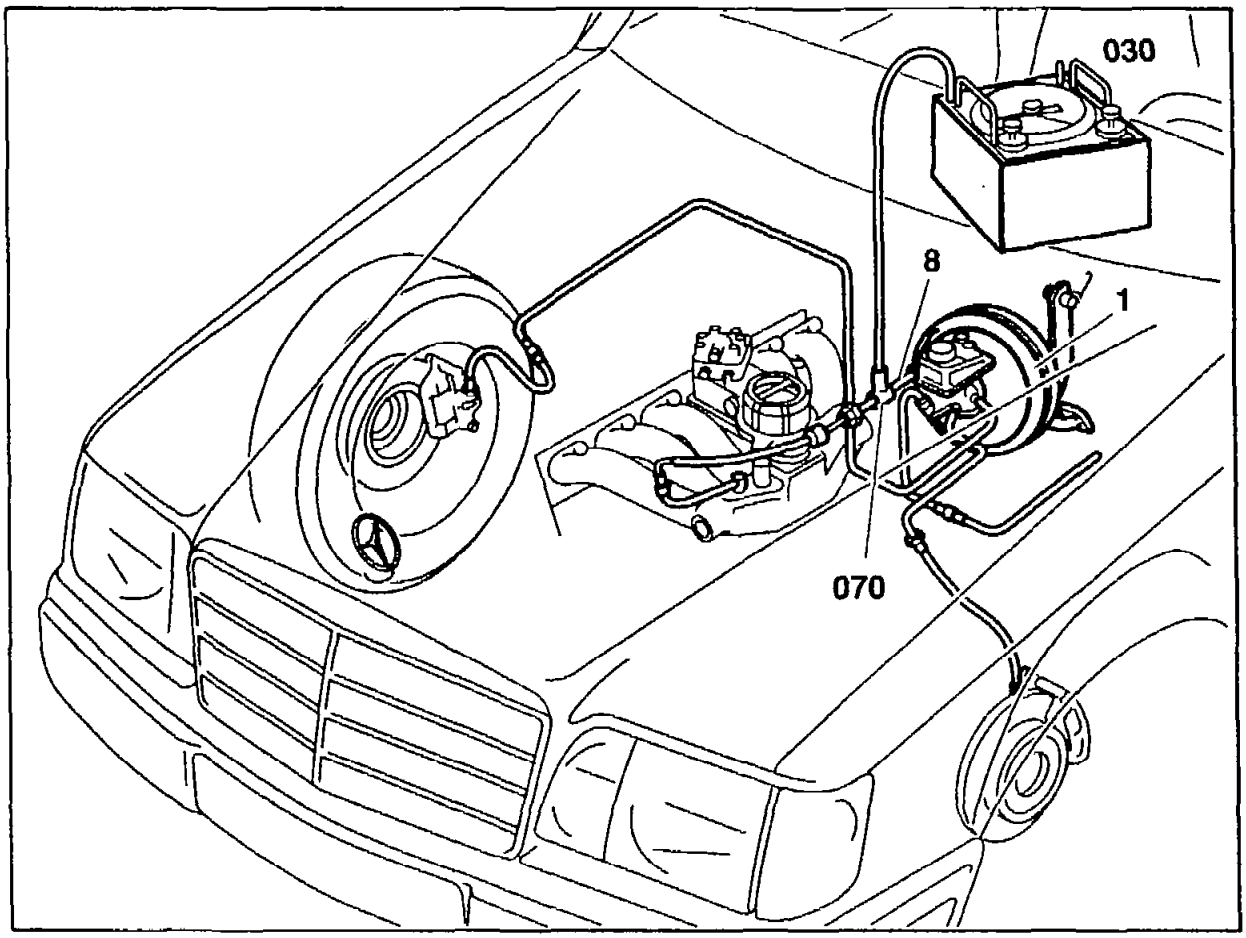

P42-5322-57

Vacuum line (8)	unscrew at brake booster (1), screw on, 30 Nm.
Test connection (070)	screw on between brake booster (1) and vacuum line (8), unscrew. Test connection (070) shop-made.
Tester (030) 201 589 13 21 00	connect to test connection (070), disconnect.

Check valve . . . . . check for leakage. For this purpose allow engine to run and create vacuum of 0.75 – 0.8 bar by depressing accelerator and releasing suddenly. A vacuum higher than 0.8 bar can be built up by actuating the brake pedal. Then shut off engine. The vacuum should not decrease by more than 0.2 bars within 30 seconds. If a higher vacuum loss is measured, replace check valve together with vacuum line. Repeat leakage test. If the leakage is still as high as previously, the screwed connections may be damaged or the brake booster may be leaking. Where appropriate, check brake booster (43–0325).

Special tool

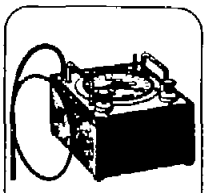

201 589 13 21 00
00 42 80

Shop-made tool

Fabricate test connection according to drawing (parts 1, 3, 4, 5 and 6 are brazed together).

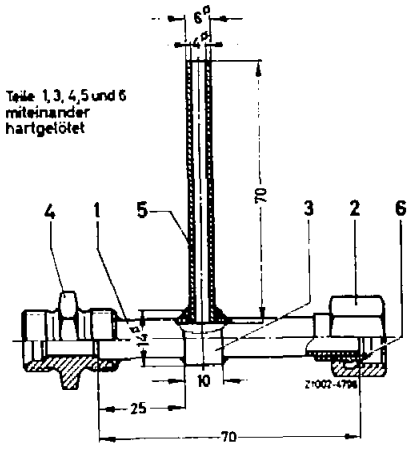

43–0325 Checking brake booster

Operation no. of operation texts and work units or standard texts and flat rates:
43–1031

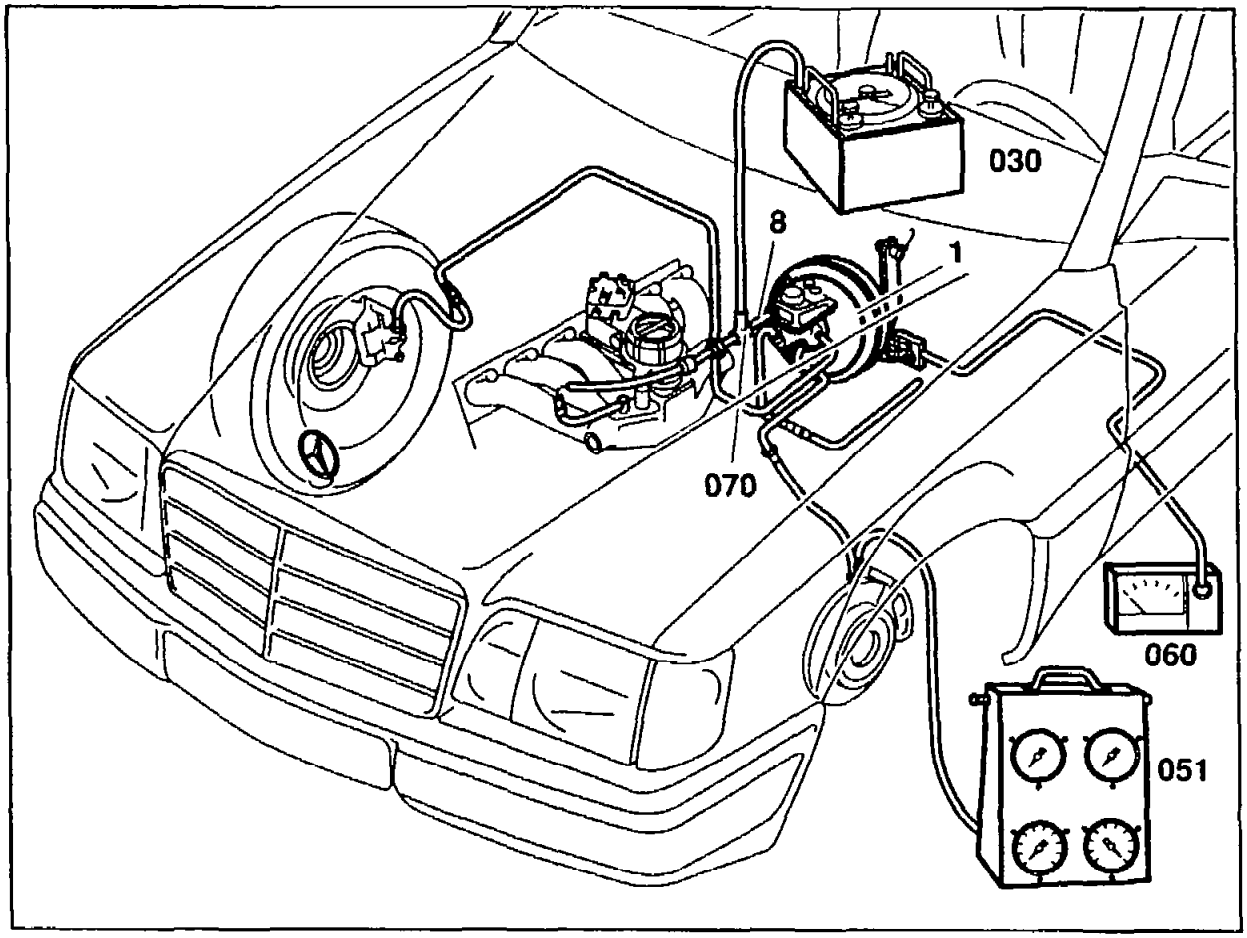

P42-5326-57

Vacuum line (8)	unscrew at brake booster (1), screw on, 30 Nm.
Test connection (070)	screw on between brake booster (1) and vacuum line (8), unscrew. Test connection (070) shop-made.
Tester (030) 201 589 13 21 00	connect to test connection (070), disconnect.
(Pressure tester 051)	connect to brake caliper, disconnect, after unscrewing bleed screw. Bleed pressure tester (051). After testing bleed only brake caliper to which pressure tester (051) was connected (42–0010).

Pedal force gauge (060)	install on brake pedal, remove.
Check brake booster as follows	Allow engine to run and create a vacuum of 0.75 – 0.8 bar by depressing and suddenly releasing accelerator pedal. If the vacuum achieved is significantly lower or if the vacuum decreases immediately, the O-ring between the brake booster (1) and tandem master brake cylinder may be damaged or the check valve in the vacuum line (8) may be defective. On vehicles with diesel engine - check vacuum pump (07.1-160)
Brakepedal	depress with specified force, read off line pressure (see Table).

Note

In order to allow for measuring errors (wrong force on brake pedal, wrong vacuum) and fluctuations of the testing devices, a tolerance of ± 10 bar from the specified value is permissible. Replace brake booster according to condition (43–0350). Test check valve for leakage (43–0023).

Data

Model	Brake booster [2]	Booster dia.	Boost factor approx.	Force curve: Line pressure in bar with force on brake pedal and vacuum of 0.75 – 0.8 bar				
				50 N	100 N	150 N	200 N	250 N
124 [1] RL 201.029/035	ATE T52/4A/ 255 Lucas LSC 80	254 mm 10"	3,85	10 – 16	26 – 35	43 – 54	59 – 70	75 – 85
201.023/024/028/122/126 1st version up to 08/88	Lucas LSC50 DBA Isovac	203 mm 8"	3,4	5 – 11	20 – 31	35 – 50	54 – 65	70 – 76
201.023/024/028/122/126/128 2nd version as of 09/88 201.018	Lucas LSC65 Bendix	228.6 mm 9"	3,85	7 – 15	26 – 38	43 – 58	62 – 75	78 – 88
124.027/029/127/129 LHD 124.003/004/007/008 LHD 124.104/105/106/107 LHD 201.029/035 201.128 1st version up to 08/88	ATE T52/4A/ 225 – 210	203/ 228.6 mm 8"/9"	4,5	10 – 18	25 – 38	42 – 58	59 – 78	75 – 97
124.034/036 201.036	ATE T52/4A 225 – 210 Lucas LSC115	203/ 228.6 mm 8"/9"	5,6	14 – 25	35 – 45	53 – 63	71 – 81	87 – 98

[1] Not 124.027/029/034/036/127/129,
LHD 124.003/004/007/008/104/105/106/107.

[2] Girling company designation replaced by Lucas.

Special tool

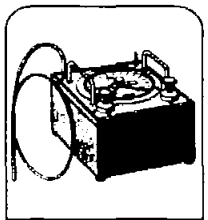

201 589 13 21 00
00 42 80

Commercially available tools and testers

Designation	e.g. Messrs., order no.
Pressure tester (051)	ATE, D-60480 Frankfurt/M. Order no. 3 9305-1020.4
Pedal force gauge (060)	Bosch, D-73207 Stuttgart Order no. BSA 100

Shop-made tool

Fabricate test connection according to drawing (parts 1, 3, 4, 5 and 6 are brazed together).

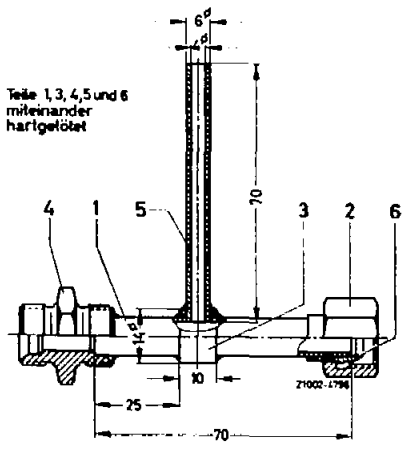

43-0350 Removal and installation of brake booster

Preceding work:
Remove stepped tandem master brake cylinder (42-0310).
Remove cover below instrument panel (68-0150).
Vehicles with ASR:
Remove pressurizing pump (M15) (42-0863).

Operation no. of operation texts and work units or standard texts and flat rates:
43-1032, 43-1033, 43-1034

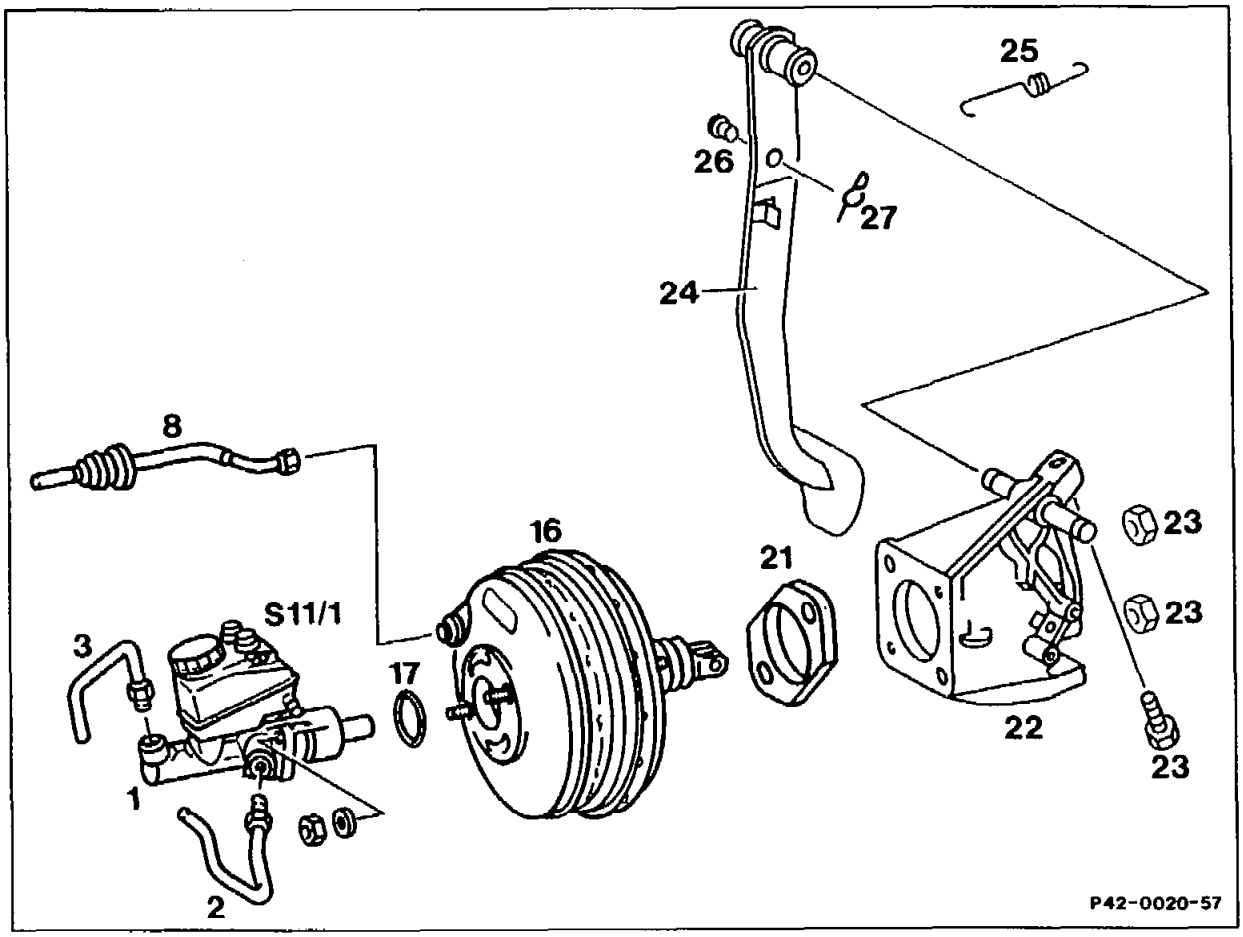

Vacuum line (8)	unscrew from brake booster (16), screw on, 30 Nm.
Brake pedal return spring (25))	Unhook, hook in.
Retainer (27)	pull out of pin (26), install.
Pin (26)	remove from pedal (24), install.
Nuts (23) or bolt	unscrew from bracket (22) on front end, screw on, 15 Nm.
Brake booster (16)	remove, install. The control housing of the brake booster (16) is made of plastic and can break if not treated with care. Test check valve (43-0023).

⚠

Check brake booster (16) to see if any brake fluid has entered.

Joint seal (21) . . . . . check for damage and proper seating, replace if required.

⚠

If brake fluid loss cannot be detected externally, check whether brake fluid has entered the brake booster through a leaky secondary seal in the tandem master brake cylinder. If so proceed as follows:

1. Evacuate brake fluid with installed brake booster.

2. If more than 100 cm^3 of brake fluid is present in the brake booster, replace brake booster.

Note

The rolling diaphragm in the brake booster is resistant to brake fluid, but not the reaction disc and the poppet valve in the control unit. For this reason evacuate brake fluid only with brake booster installed. When the brake booster is installed and less than 100 cm^3 of brake fluid is present, it is not possible for brake fluid to reach the reaction disc or poppet valve.

Note on vehicles with shift lock

When replacing brake booster it is necessary to readjust the control cable on these vehicles. See "Automatic transmission 722.3" 27-0740 section "C" for adjustment.

Checking power steering fluid level

4611

All models

Oil grade

MB steering gear oil p/n 000 989 88 03	Refer to MBNA Factory Approved Service Products list

VT 27, VT 49 and ZL 49

- Unscrew wing nut or knurled nut (8) from reservoir and remove cover (10)

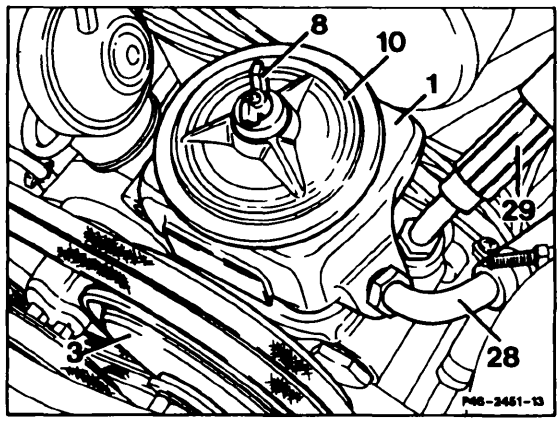

- Warm fluid level (operating temperature, approx. 80°C) up to stamped or cast in mark (approx. 20 mm below reservoir edge).
- Cold fluid level (room temperature 20°C) 6-8 mm below mark.

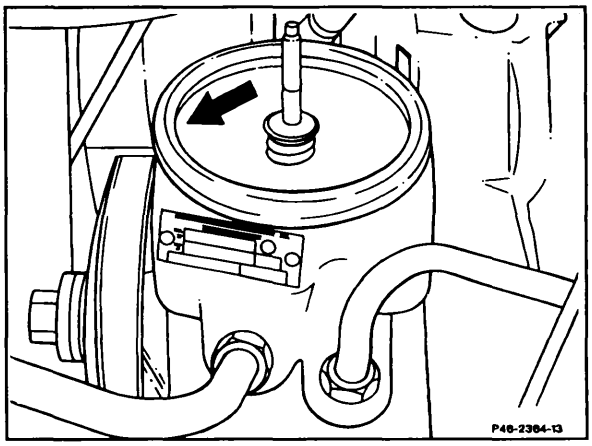

⚠CAUTION!
Do not overfill reservoir. During maintenance work, the oil is often only at room temperature.

- Install cover, making sure that gasket seats properly. Screw on wing nut, or knurled nut.

VT 61, VT 161, VTP 62, VTP 162, ZL 61 and ZL 161

- Unscrew vent cap (47), wing nut or knurled nut from reservoir and remove cover (45)

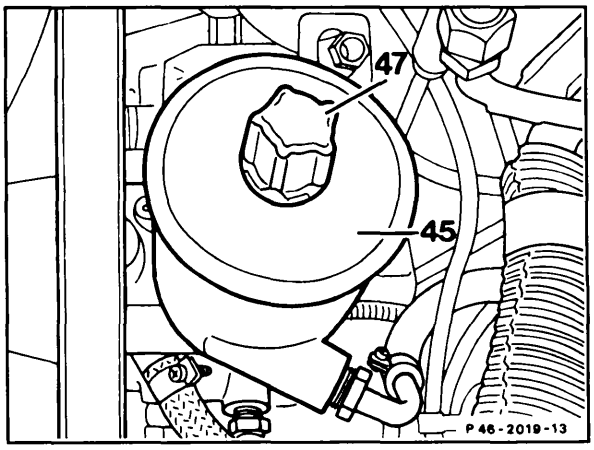

45 Cover
47 Vent cap

Version through 12/90

Warm fluid level (operating temperature, approx. 80°C) 18-26 mm below upper reservoir edge. Cold fluid level (room temperature 20-50°C) between minimum and maximum marks.

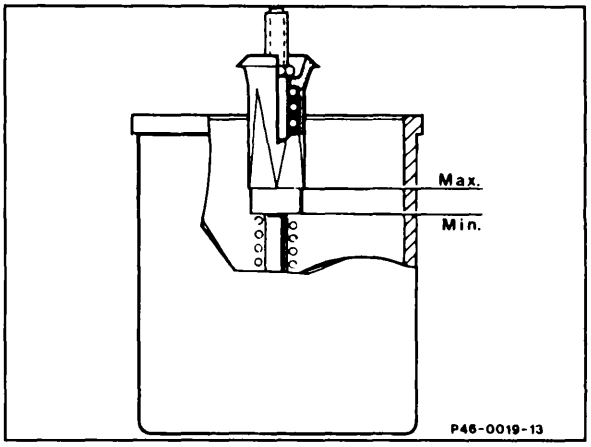

Version starting 1/91

Cold fluid level (room temperature 20°C) between minimum and maximum marks on plastic sleeve (30c).

- Add fluid, if necessary.

⚠**CAUTION!**
Do not overfill reservoir.

- Install cover, making sure that gasket seats properly. Screw on vent cap, wing nut, or knurled nut.

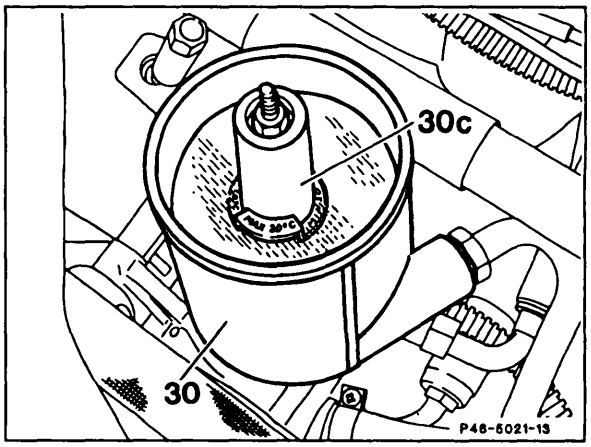

Engine 120

- Remove cover between cylinder head covers.
- Remove filler cap. The integral dipstick shows the correct minimum and maximum markings and the respective temperature ranges.

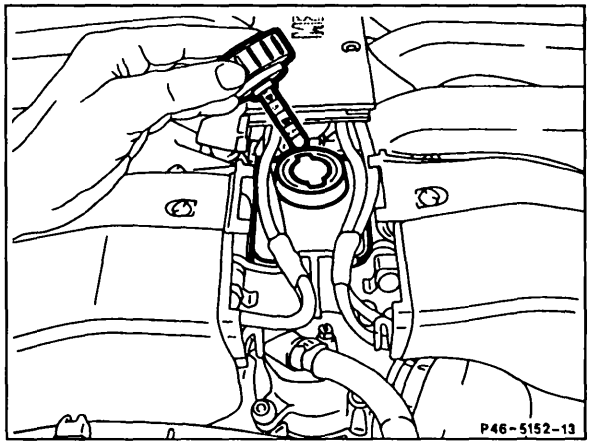

Checking steering play

4650

All models

Note:
When performing this job number, the engine compartment lower panel or the noise encapsulation panel must be removed, and replaced after completing all maintenance work (refer to Job No. 6190 or 9490).

- In steering center position, maximum allowable play (a) at steering wheel is 25 mm.

Note:
The steering gear may be adjusted in car if adjusting specifications are carefully observed (on separate order only).

a = max. 25 mm

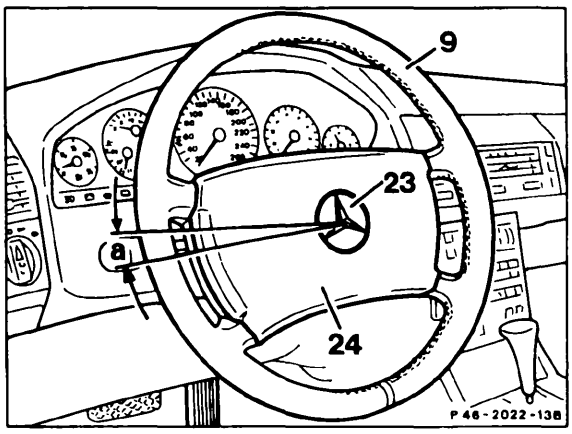

- On all models starting 04/1984, check play of steering coupling or of both flexible couplings (2).

Models 124 (except 124.034/036), 129, 201
2 Flexible coupling

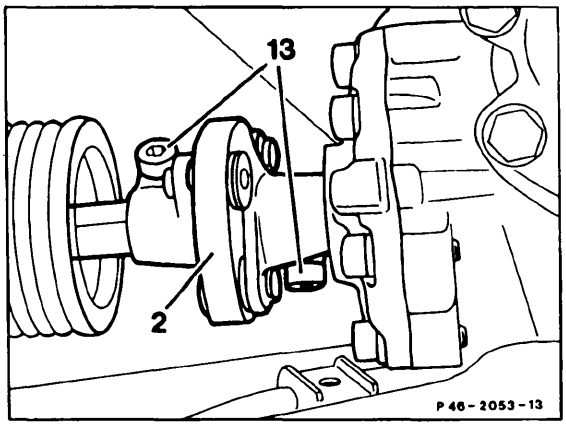

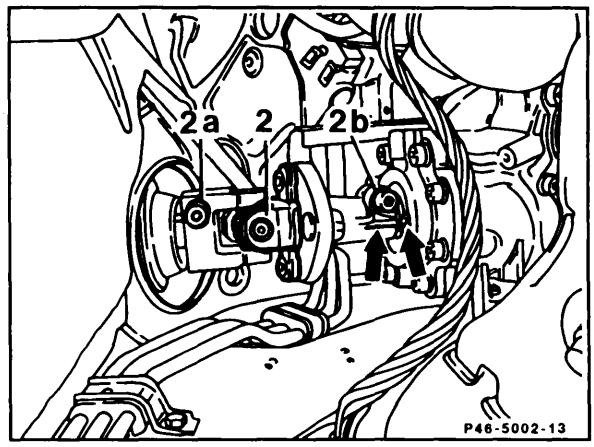

Models 124.034/036, 140

- Check mounting of idler arm (3) in rubber bushings, using dial indicator as necessary (SMS Job No. 46-0110). If play is greater than 0.5 mm, replace rubber bushing (SMS Job No. 46-0520) on separate order.

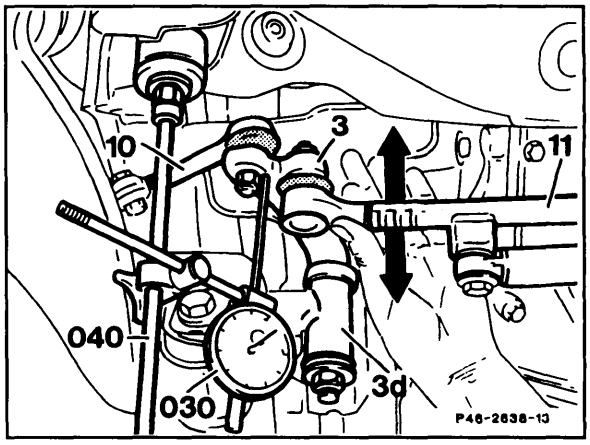

All models except 140

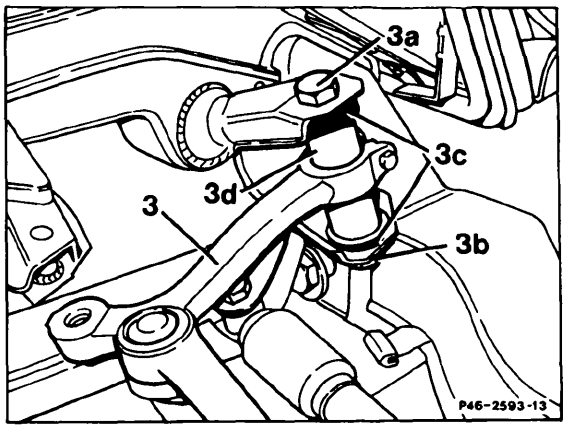

Model 140

- With vehicle resting on wheels, move steering left and right approx. 100 mm while checking the following ball joints:
- Tie rod end (10) ball joints.
- Tie rod (11) ball joints.
- If play is found, replace the appropriate ball joint.
- Check condition of rubber boots.

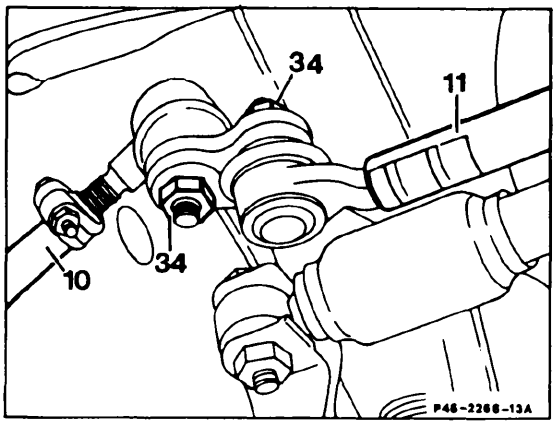

⚠ **CAUTION!**
If a damaged rubber or plastic boot is found, replace affected joint immediately, since penetrating dirt will destroy joint in a short time. **Replacement of only the boot is permitted only if no dirt whatsoever has entered the joint.**

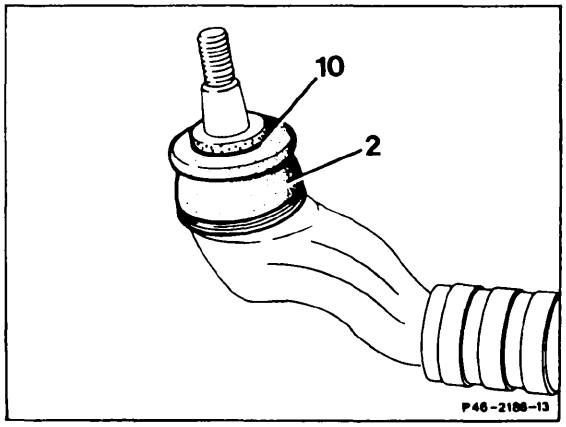

2 Rubber boot

Retightening steering bolts

4671

All models except 140

Torque specifications	Nm
Steering gear mounting bolts	70-80

Check that steering gear bolts are tight, retighten, if necessary.

Note: Do not loosen bolts to check torque. If the torque required to turn the bolt **further** is less than specified, tighten bolt accordingly.

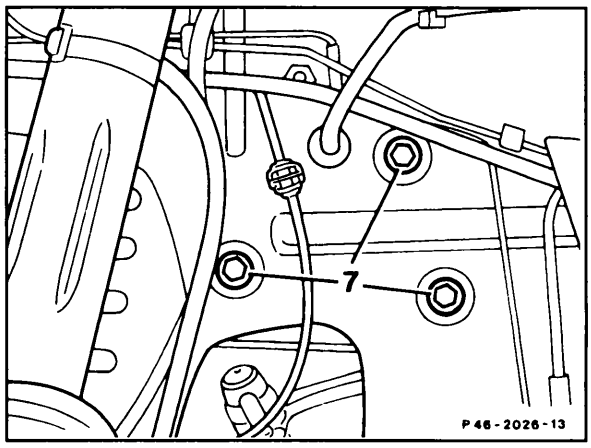

7 Steering gear bolts

Model	Power steering gears	Arrange-ment	Pitman arm [1] new (old)	Steering gear ratio in center position
124.004/007/008/ 026/027/028/029/ 030/031/032/06/088/09/ 104/105/106/107/125/126/127/ 128/129/13/185/186/188/19 **Sports suspension 124.05**	765.904	LHD	2419 (2408) [2]	13,9
		RHD	2420 (2409) [2]	
124.003/019/020/021/022/023/ 079/080/081/082/083/120/180 **Sports suspension 124.04**	765.905	LHD	2428 (2406) [2]	13,9
		RHD	2429 (2412) [2]	
124.22/23/29/ 33/39	765.906	LHD	2414	13,9
		RHD	2418	
124.04/05	765.908	LHD	2419 (2408) [2]	14,6
		RHD	2420 (2409) [2]	
124.034/036	765.921	LHD	2430	14,0
Sports suspension **124.026/028/030/031/032/06/125/126/128/128/13**	765.928	LHD	2419 white	13,3
		RHD	2420 white	
Sports suspension **124.019/020/021/022/023/120**	765.929	LHD	2428 blue	13,3
		RHD	2429 blue	
129	765.907	LHD	2912	14,0
		RHD	2913	
129.076	765.925	RHD	2913	14,0
140	765.940	LHD	4006	13,0
		RHD	4007	
140.03 up to 12/91	765.941	LHD	4006	13,0
		RHD	4007	
140 Special protection	765.961	LHD	4006	13,5

[1] The pitman arm together with the steering gear forms a unit and is therefore not available as a part.

[2] As of 1.6.89 the cars are fitted with a modified steering geometry. The cone in the pitman arm and steering idler arm has been enlarged by 2 mm.

Model	Servo steering gear	Arrange-ment	Pitman arm [3]	Steering gear ratio in center position
201.022 [1] [2]/024 [1] [2]/122 [1] [2]	760.700	LHD	0115	18,9 mechanical
		RHD	0116	
201.022 [1]/024 [1]/122 [1]	765.900	LHD	0115	14.6
		RHD	0116	
201.034/035 [4]	765.902	LHD	0115	13,3
		RHD	0116	
201.022 [2]/023/024 [2] [4] [5]/028 [4]/029 [4]/ 122 [2] [4]/126 [4] /128 [4]	765.903	LHD	0115	14,6
		RHD	0116	
201.035 [6]	765.923	LHD	0115	13,3
		RHD	0116	
201.018/02 [6]/12 [6]	765.924	LHD	0115	14,6
		RHD	0116	
201.036 Evo I / Evo II	765.926	LHD	0115 blue identification	13,3
Sports chassis 201.018/02 [6]/12 [6]	765.927	LHD	0115 pink	13,9
		RHD	0116 pink	
202	765.950	LHD	0203	13,9
		RHD	0204	
Sports chassis 202	765.922	LHD	0203	13,3
		RHD	0204	

1) up to vehicle ident. end no. A084 024 (with tensioning bush)
2) as of vehicle ident. end no. A084 025 (without tensioning bush)
3) The pitman arm together with the steering gear forms a unit and is therefore not available as a part.
4) Steering gears with alu-housing up to 5/91
5) Japan only with alu-housing
6) Steering gears with nodular graphite iron housing phased in as of approx. 5/91, previously alu-housing.

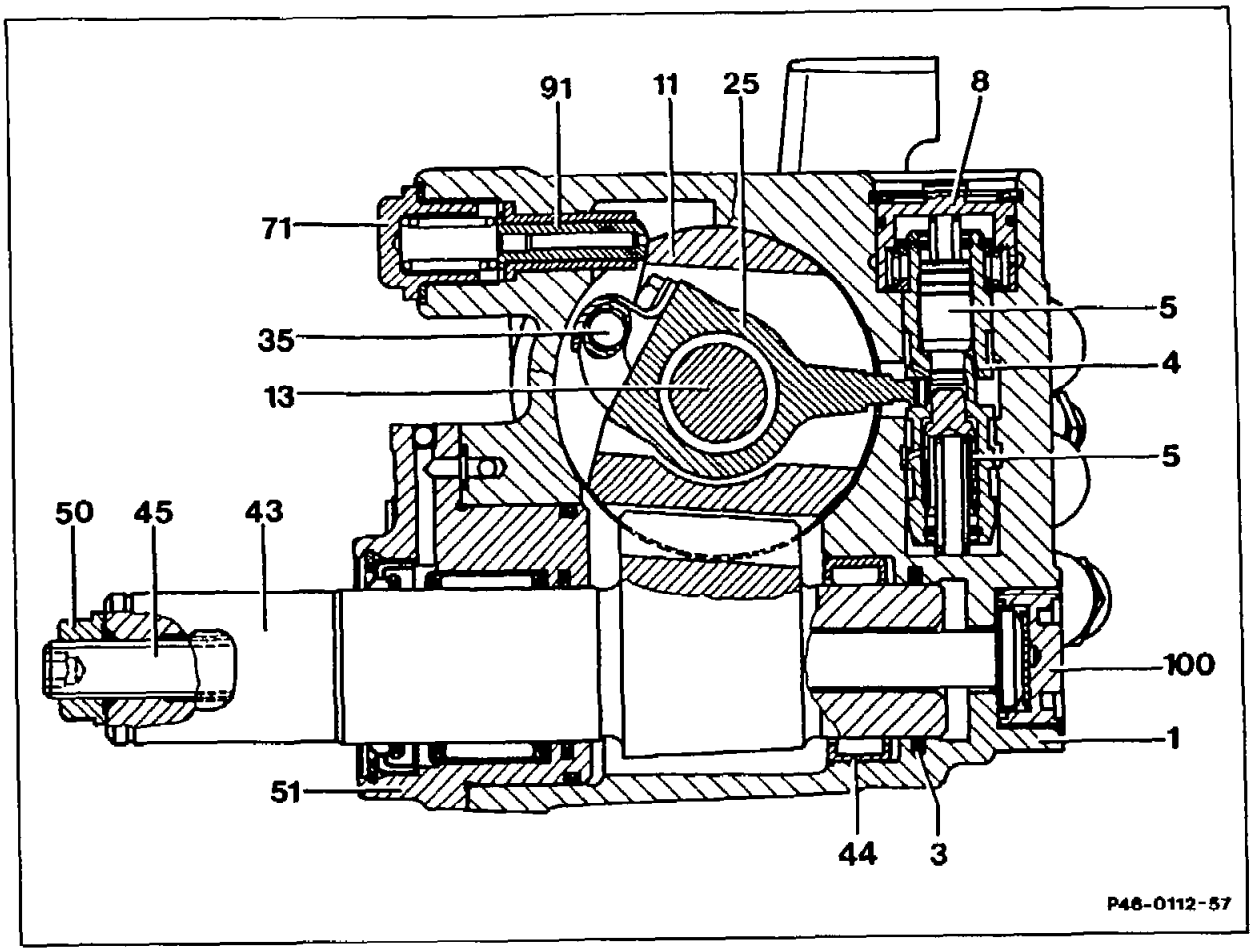

1	Steering gear housing	43	Pitman arm shaft
3	O-ring	44	Needle sleeve
4	Control valve	45	Adjusting screw
5	Reaction piston	50	Collar nut
8	End cover	51	Pitman arm shaft bearing cover
11	Power piston	71	Screw plug
13	Steering shaft	91	Automatic clearance compensator
25	Steering nut	100	Screw plug
35	Ball		

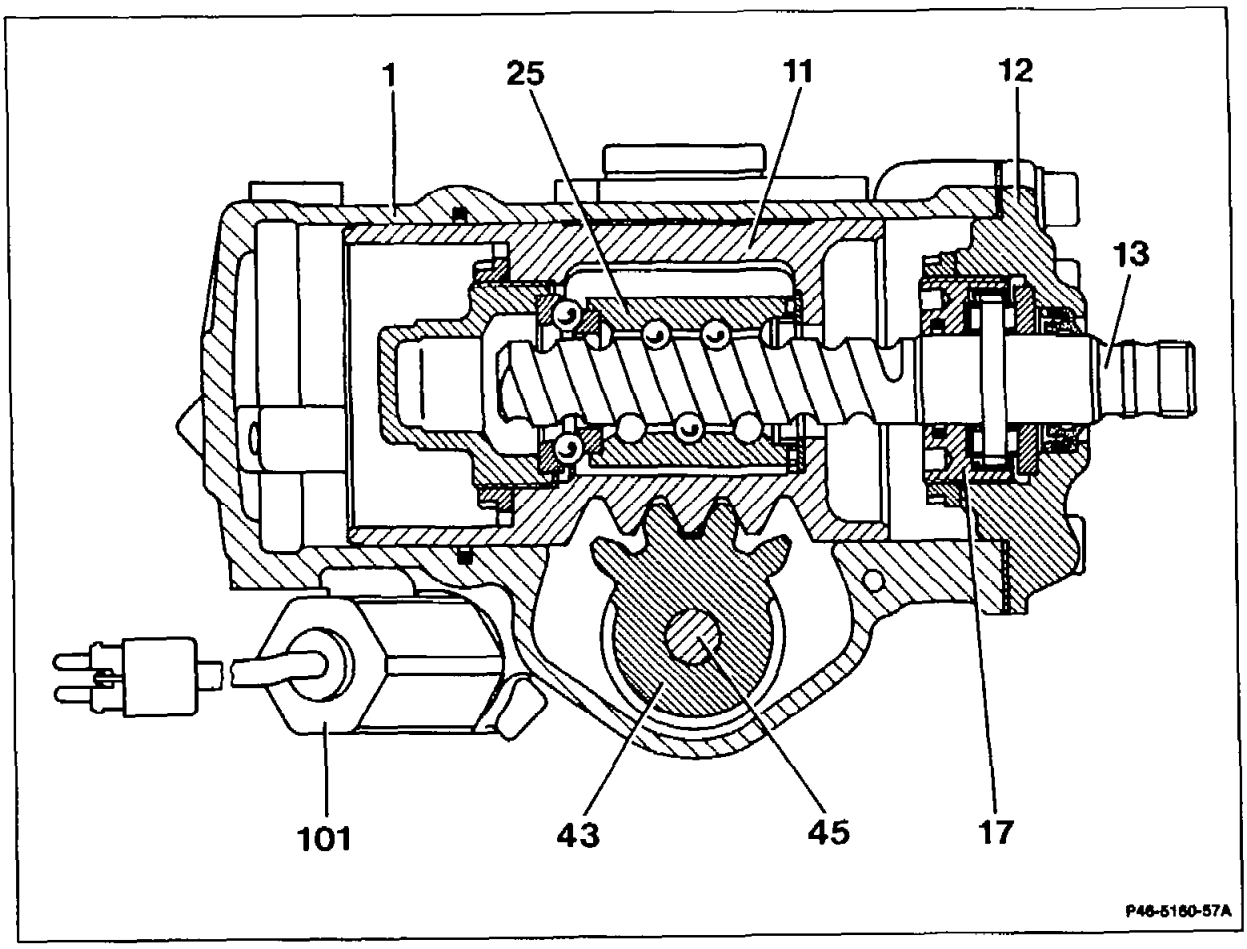

1	Steering gear housing	25	Steering nut
11	Power piston	43	Pitman arm shaft
12	Upper bearing cover	45	Adjusting screw
13	Steering shaft	101	Parameter steering (PML) P-valve
17	Bearing insert		

Note
Tandem pumps on vehicles with level control, 4MATIC, ASD, ADS. The pressure of the radial piston pump section (approx. 150 bar) in the tandem pump is limited in the control units of the connected systems.

Model	Engine	Opening pressure in bar	Color coding		Version	
		LHP	LHP	TANP	LHP	TANP
124	102 up to 04/91	95 ± 5	yellow	–	VT/ZL 61	–
	601 up to 12/91					
	102 as of 05/91				VT/ZL 67	
	601 as of 01/92					
	111			yellow/ green		VTP/ZLP 67
	602 up to 12/91	110 ± 5	red		VT/ZL 61	
	603 up to 04/91			–		
	602 as of 01/92				VT/ZL 67	
	603 as of 05/91					
	103, 104 CIS-E up to 09/92				VT/ZL 61	VTP 62
	602 Turbo up to 12/91			red/ green		
	603 Turbo up to 12/91					VTP/ZLP 161
	119 LH				VT/ZL 67	VTP/ZLP 67
	104 HFM as of 10/92					
	602 Turbo as of 01/92					
	603 Turbo as of 01/92					
	605, 606					

LHP = power steering pump
TANP = Tandem pump
ZL/ZLP = Power steering/tandem pump – Zahnradfabrik Friedrichshafen
VT/VTP = Power steering pump/tandem pump – Vickers or LUK.

Model	Engine	Opening pressure in bar	Color coding:		Version	
		LHP	LHP	TANP	LHP	TANP
129	103, 104 CIS-E up to 06/93, 119 CIS-E up to 09/92	110 ± 5	red	red/ green	VT/ZL 61	VTP 62
					VT/ZL 67	VTP/ZLP 67
	104 HFM as of 07/93					
	119 LH as of 10/92	115 ± 5		silver/green	–	
	119	125 ± 5	–	violet/ green		
	120					
140	104 with LH and HFM	105 ± 5	black	black/ green	VT/ZL 67	VTP/ ZLP 167
	119 LH	125 ± 5	violet	violet/ green		
	120		–		–	
	603 Turbo		violet		VT/ZL 67	
201	102 [1]	65 ± 5	black	–	VT/ZL 61	–
	102 [2], 103, 601, 602	85 ± 5	green			
202	111, 601, 604	95 ± 5	yellow	yellow/ green	VT/ZL 67	VTP/ZLP 67
	104, 605	110 ± 5	red	red/ green		

LHP = Power steering pump
TANP = Tandem pump
ZL/ZLP = Power steering/tandem pump – Zahnradfabrik Friedrichshafen
VT/VTP = Power steering pump/tandem pump – Vickers or LUK.

[1] Introduction as of 09/84 to 08/87 across the board, as of 09/87 vehicles without CAT, air conditioner or automatic transmission only.

[2] Introduction as of 09/87, improved steering assistance, for exception refer to number 1).

Steering idler arm

Model	Identification number	Arrangement of steering	Comment
124.0/1 Except for 124.023 (J) and 124.034/036	2407	LHS	up to 05/89
	2408	RHS	
	2412	LHS	As of 06/89 2 mm larger taper for drag link
	2413	RHS	
124.034/036	2415	LHS	only left-hand steering
124.023 (J)	2414	LHS	only left-hand steering
124.2/3	2410	LHS	–
	2411	RHS	
201	0117	LHS	–
	0118	RHS	

LHS = left-hand steering
RHS = right-hand steering

Drag link

Model	Length "a"	Comment
124.0/1 except for 124.034/036	536 ± 0.5	Installed up to 05/89
	526 ± 0.5	Installed as of 06/89. Drag link with revised kinematics and larger tapers
124.2/3	529 ± 1	Strengthened steering shock absorber bracket as of 11/89, steering shock absorber installed turned through 180°
124.034/036	526 ± 0.5	Steering shock absorber bracket offset compared to 124.0/1
201	487 ± 0.5	–

Steering shock absorber

Model	124, 201	124 4MATIC
Extended length	538.5 ± 1	538.5 ± 1
Compressed length	330 ± 2	330 ± 2
Color identification	1 white colored ring	2 white colored rings
Damping, tension-compression in N	800 ± 120	800 ± 120

Tie rod

Model	Tie rod length (and range of adjustment) "a" in mm	Version	Identification
124.0/1 except for 124.034/036	333 ± 12	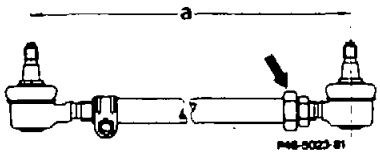 Tapered connection with lock nut (arrow) mounted towards steering control arm	**left** [1] painted gray/green **right** [2] painted black
124.2/3	367.8 ± 12	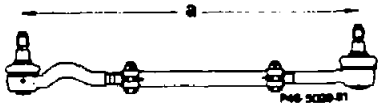 Curved ball pivot mounted on steering control arm	**left** [13] painted gray/green **right** [3] painted black **left** [134] painted black **right** [4] painted gray-green
124.034/036	333 ± 12	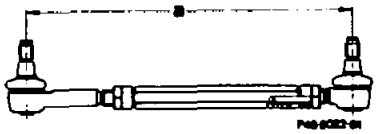 With hexagon adjustment tube and 2 tapered connections, short ball pivot mounted on steering control arm	**left** [134] painted gray/green
124.034/036	333 ± 12	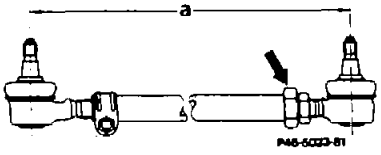 Tapered connection with lock nut (arrow) mounted towards steering control arm	**right** painted black
201	337 ± 12	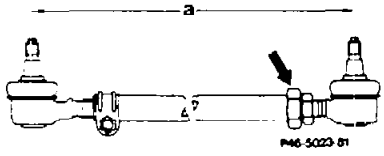 Tapered connection with lock nut (arrow) mounted towards steering control arm	**left** [1341] painted gray/green **right** [2] painted black

1) right on right-hand steering vehicle.
2) left on right-hand steering vehicle.
3) left-hand steering vehicle.
4) right-hand steering vehicle.

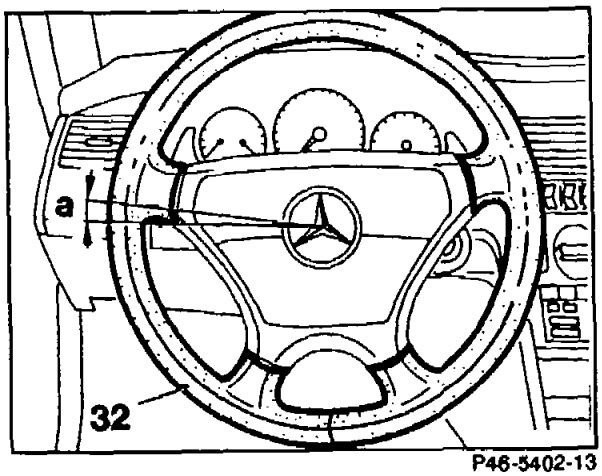

P46-5402-13

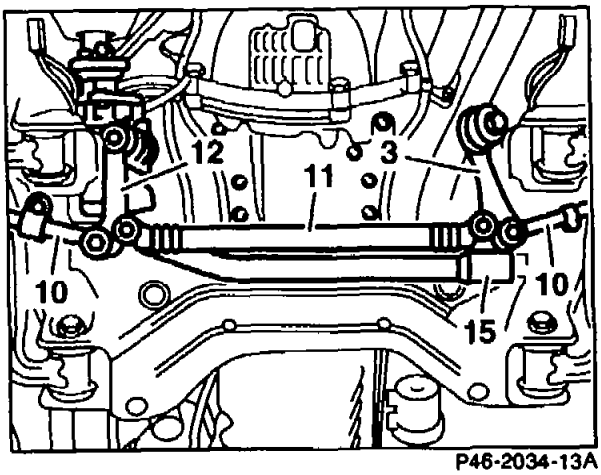

P46-2034-13A

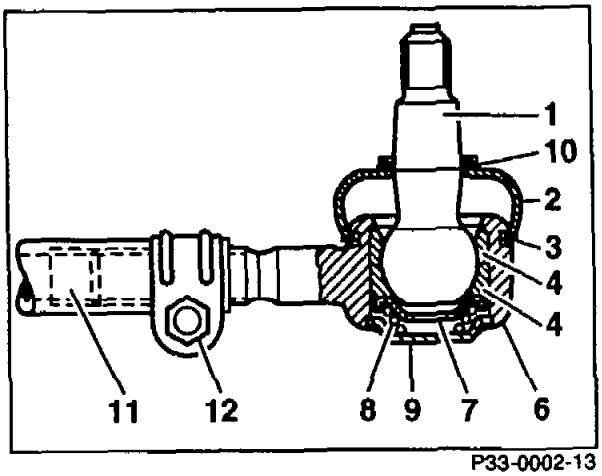

P33-0002-13

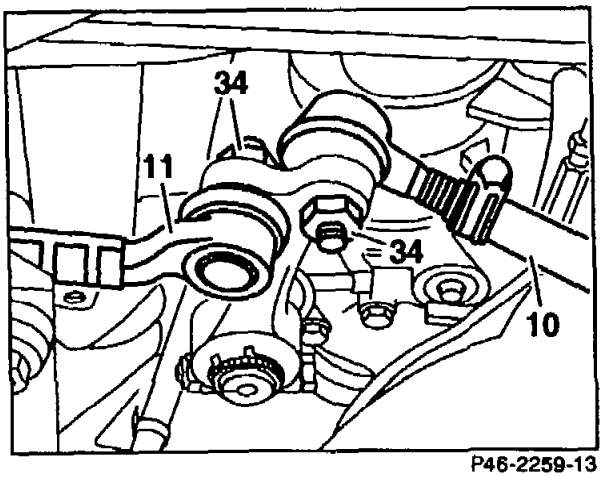

P46-2259-13

Steering wheel (32) . . . . . Check play.
Vehicle must be standing on wheels. When the engine is switched off, the maximum play (a) must be 25 mm at the steering wheel rim in the steering center position.

Drag link (11) and tie rods (10) . . . . . Check play as follows:

- Turn steering wheel rim evenly approx. 100 mm anti-clockwise and clockwise. With the help of an assistant, check tie rod ball joints and drag link ball joints; there must not be any detectable play or,

- Check for play at the tie rod ball joints and drag link ball joints by vigorously pulling and pushing them and at the same time by touch.

Check cup seals for damage and replace drag link (11) or ball joints of the tie rods (10), if necessary (46-6177 or 46-7007).

Steering idler arm mount (26) . . . . . Check, replace if necessary (46-6317).

Wheel bearing play . . . . . Check, replace if necessary (33-0300).

Steering gear . . . . . Check play, adjust if necessary (46-3230).

Note
The play compensator in the steering gear only works with the steering in the straight-ahead position.

46–0120 Checking and adjusting friction torque of steering gear

Preceding work:
Removing and installing steering gear (46–3400)

Operation no. of operation texts and work units or standard texts and flat rates
46–3230

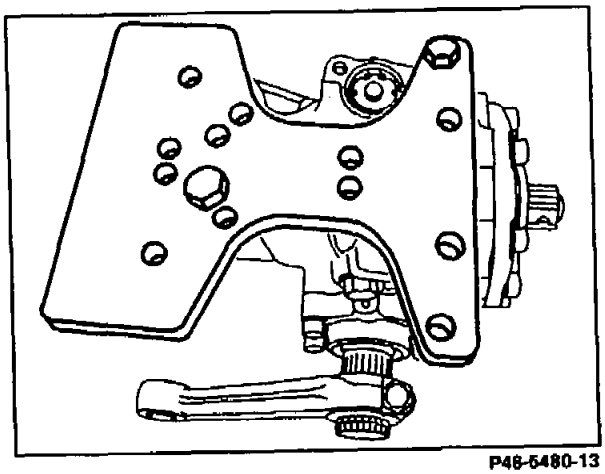
P46-5480-13

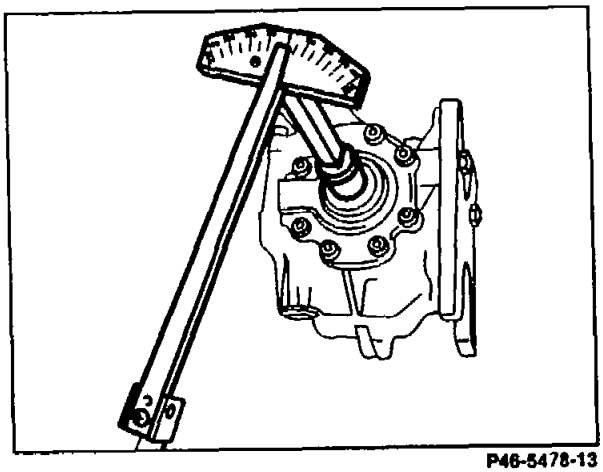
P46-5478-13

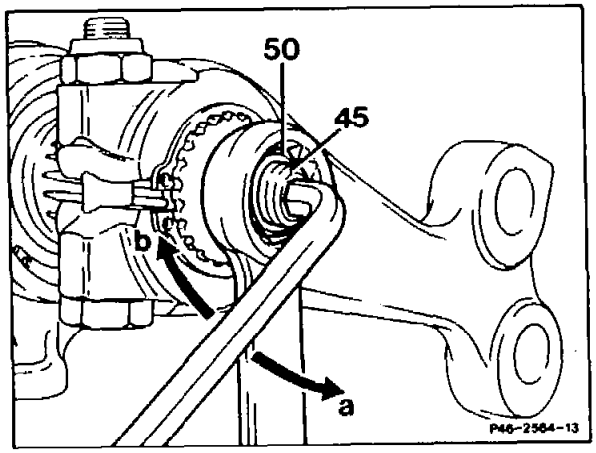

P46-2564-13

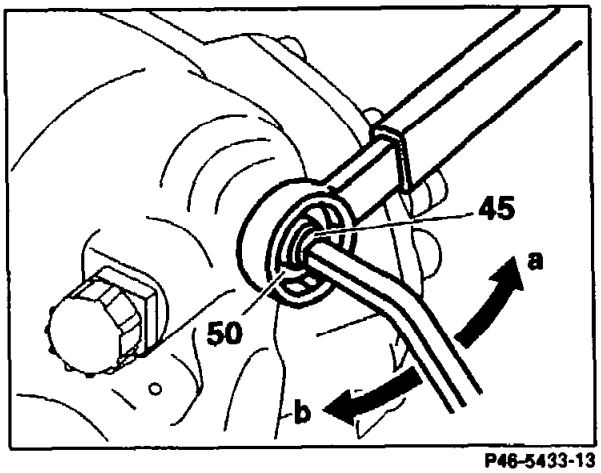

P46-5433-13

Steering gear	mount on assembly support 140 589 00 59 00 with two screws and clamp in the vise.
Total friction torque	measure at steering shaft with friction torquemeter 123 589 02 21 00 and wrench socket insert 123 589 00 08 00 by slowly turning the steering shaft from stop to stop several times.

Lock nut (50)	slacken. Turn adjusting screw (45) 1/4 turn in stages • direction "a" = increases friction torque • direction "b" = reduces friction torque Tighten collar nut to 60–65 Nm, holding adjusting screw (45) tight.
Total friction torque	re-check after tightening collar nut. **Observe notes**

The friction torque in the center area should be 30–60 Ncm above the previously measured basic friction torque.

Example:

Friction torque of steering gear after setting

Basic friction torque	60 Ncm
Increase in center area	30–60 Ncm
Total friction torque	90–120 Ncm

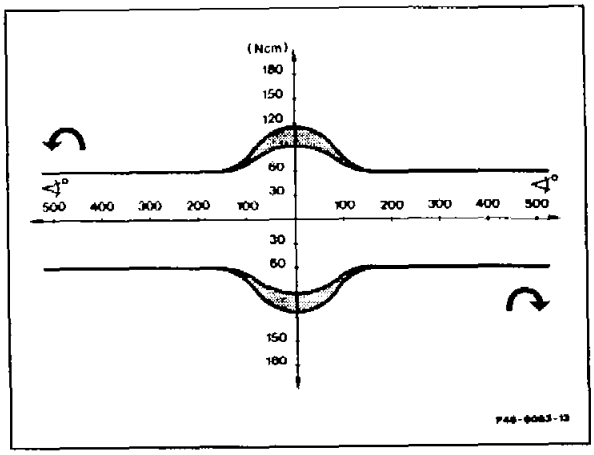

Set value

When the steering shaft is over the center position, the total friction torque should be	New steering	110–150 Ncm
	Used steering	100–120 Ncm

Special tools

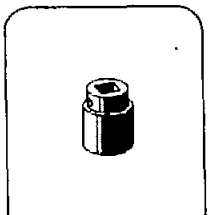

123 589 00 08 00
46

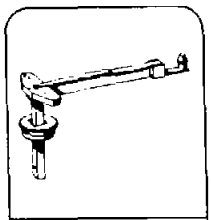

123 589 02 21 00
46

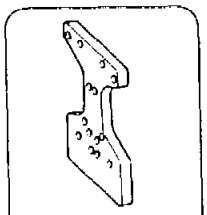

140 589 00 59 00
46

Notes

The steering gears are equipped with play compensation. However, this only acts in the center range of the steering gear.

An adjustment can therefore only be carried out noting the following points:

1. Do not adjust friction moment above the specified value.
2. When turning the steering gear no high spots should be detected after adjustment.
3. The steering must self-center correctly when driving straight ahead on a test drive.

On steering gears 765.900 (model 201 up to vehicle chassis end no. A 084024) the clamping bush (83) must be detached to adjust the friction moment. After adjusting the friction moment, push the clamping bush (83) onto the steering shaft so that both surfaces are parallel to the mounting points of the steering gear and the milled section points towards the pitman arm (arrow).

Push on support ring (84) and tighten the nut (85) to 50 Nm.

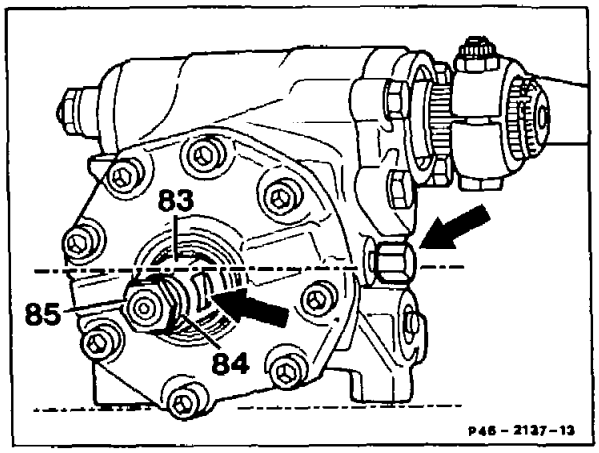

On steering gears 765.922 and 765.950 (model 202), the sleeve (23j) with two surfaces be detached from the steering shaft.

After adjusting the friction moment first

- align the clamping slot of the sleeve (23j) of the marking notch of the steering shaft, then
- push on sleeve (23j) up to the stop on the steering shaft and secure with new locking ring (23i).

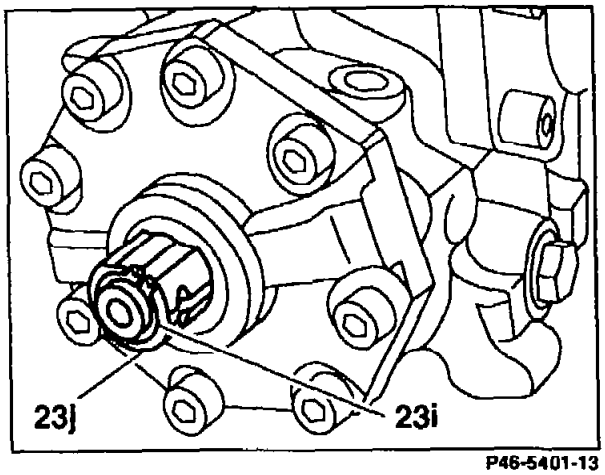

46–0140 Replacing steering gear when performing repairs to vehicle involved in accident

Assessing steering gear of vehicle involved in accident

1. If the accident involves body damage (e.g. damaged wings, side members, side panelling, rear section etc.) the steering gear can be **reused** provided

a) Front axle parts such as steering knuckle, control arm, tie rod and drag link, pitman arm, steering knuckle arm and steering idler arm are not damaged and the pitman arm shaft has not been twisted on the splined profile.

b) No overstressing of the front axle has occurred or must be assumed.

c) The steering gear can be rotated on the steering joint by hand from lock to lock without any signs of jamming.

2. The steering gear should be **replaced** for safety reasons if

a) Parts of the front axle or of the steering gear have been permanently misshapen.

b) An overstressing of the front axle is confirmed by the results of a measurement of axle alignment.

General

When assessing accident damage to the steering gear, pay attention to the following points:

If the damage relates to an insurance case, we recommend clarifying any decisions and procedures with the relevant insurance company or authorized vehicle assessor.

An impact which is transmitted through the steering linkage to the steering gear may cause damage which cannot be detected externally.

For this reason, it is necessary to examine the complete steering gear with a visual inspection and cract test. As it is not possible to conduct such a test in the majority of service shops, always replace the steering gear in cases of doubt.

Should the insurance assessor consider that the steering gear does not require to be replaced, contrary to the opinion of the workshop personnel, we recommend having the insurance assessor confirm his decision by his signature.

If, in an exceptional case, a steering gear must be examined (e.g. at the request of the insurance company, if the steering gear has been stated as the cause of the accident), the expert or person commissioned by the insurance company must be asked to issue a separate order. The workshop can then send the steering gear with RWL (returned goods delivery document) for examination to

Mercedes-Benz AG
Abladestelle 435 Garantiekontrolle
D–40476 Düsseldorf

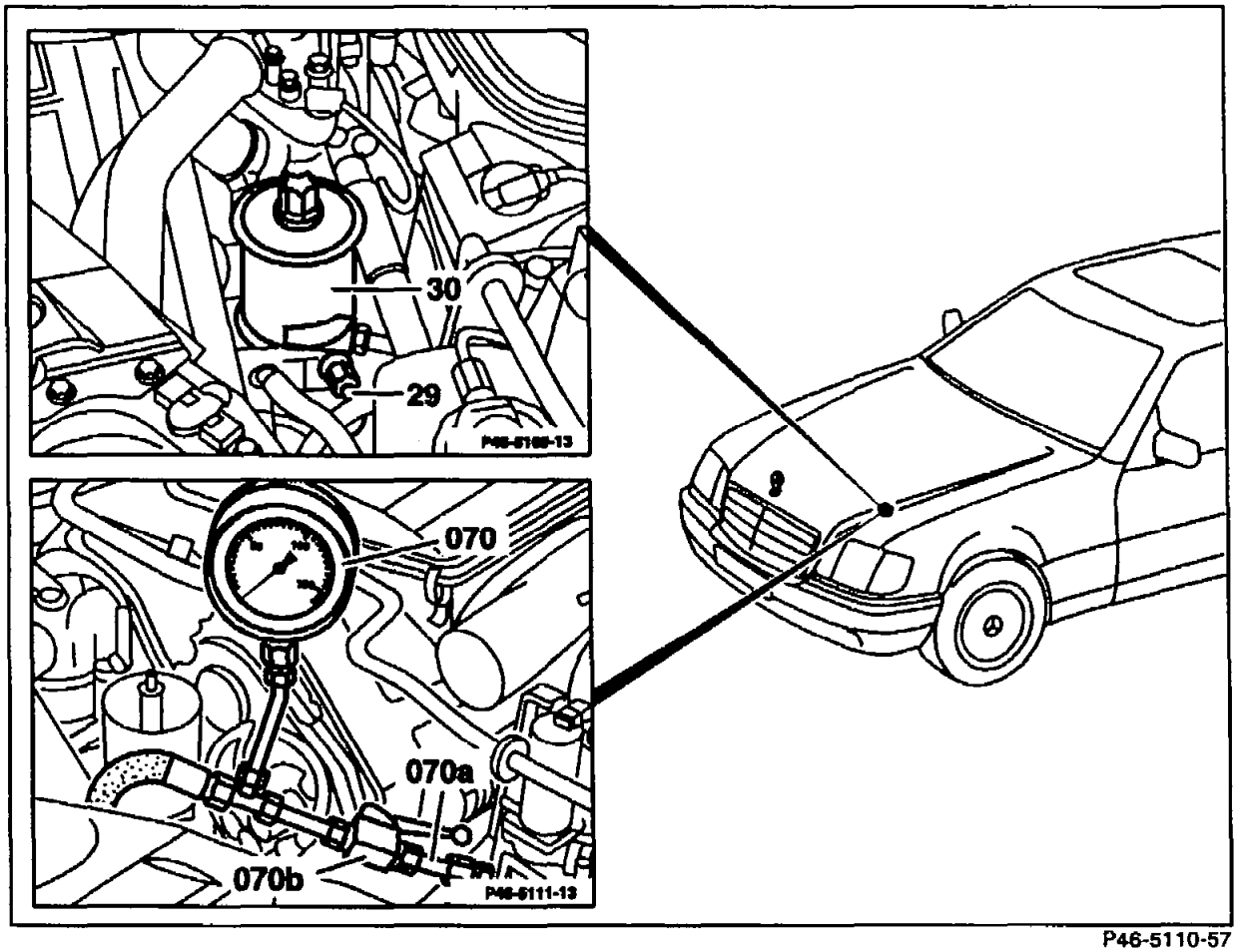

P46-5110-57

Power steering pump (30)	Extract oil with extraction device 112 589 00 72 00.
High pressure expanding hose (29)	Unscrew, screw on, 25-30 Nm.
	⚠ On vehicles with tandem pump the tester must **not** be connected to the radial piston pump.
Tester (070)	Connect to power steering pump (30). Use connector (070a) 124 589 19 63 00 or 140 589 17 63 00. Fill supply tank with steering gear oil 000 989 88 03.

Engine	**on** (idle)
Operating pressure	Test with closed throttle valve (070b), maintaining engine speed at approx. 1000 rpm. (Refer to 46-0002 for pressure values) ⚠ Only perform test for a short time, so that the oil temperature does not rise excessively If the power steering pump does not reach the specified pressure, it must be replaced.
Power steering pump (30)	Fill after the pressure testing, bleed and check for leaks (46-4080).

Types of oil, filling quantities

Steering gear oil part no. 000 989 88 03	Refer to Specifications for Service Products, sheet 236.3.

Special tools

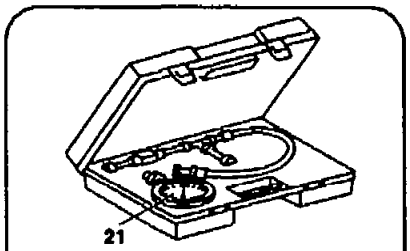

124 589 06 21 00

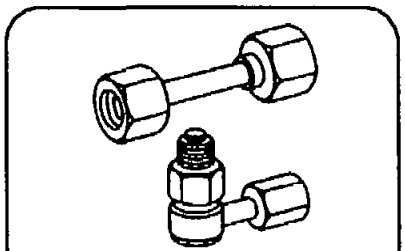

124 589 19 63 00

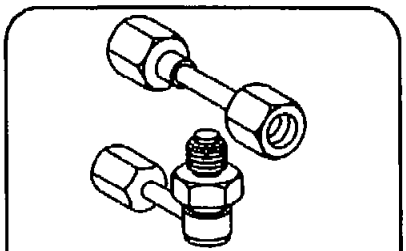

140 589 17 63 00

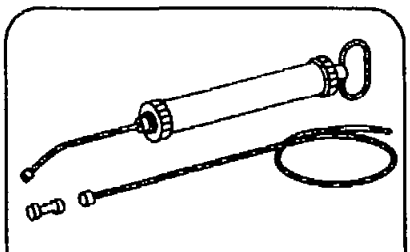

112 589 00 72 00

46–0230 Important notes regarding repair of steering gear

The steering gear repair instructions mainly comprise sealing work.
If there is any wear or damage to parts such as balls, steering nuts, steering shafts, power pistons, control valves, steering housings, the steering gear must be replaced.
The reason for this is that the parts are matched to each other in a selection procedure and, for this reason, a part cannot be matched with other existing parts. (Play between 0.006–0.01 mm).

Scrupulous cleanliness is essential when performing any work on the steering gear.

The work should be performed, if possible, on a plastic base. Do not use any fluffy cloths; chamois leather is particularly suitable for this kind of work.

Following disassembly, all the parts must be washed and blown dry with compressed air.

When examining steering parts, always apply a strict standard. In cases of doubt, always replace the part concerned.

No repair work may be carried out on the steering gear 765.961 (model 140 special protection). A steering gear for which complaints have been received must be replaced.

Type of oil

Steering gear oil 000 989 88 03	Refer to Specifications for Service Products, sheet 236.2

46–0231 Removing and installing parameter steering (PML) P-valve (Y10)

Preceding work:
Removing and installing steering gear (46–3400)

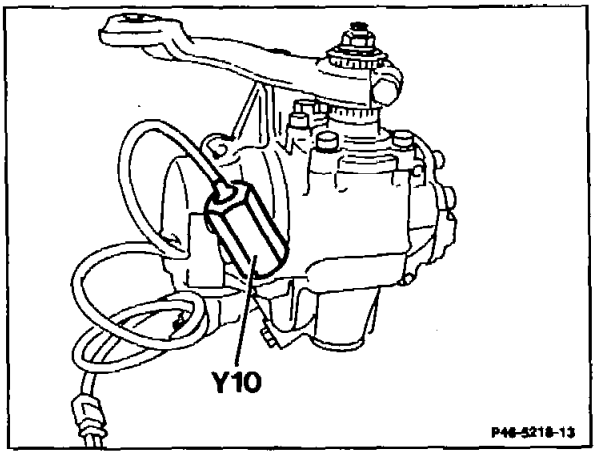

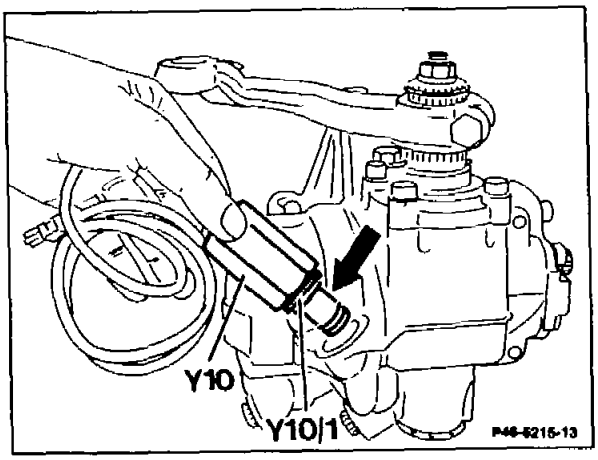

P-valve (Y10)	unscrew, screw on, 70 Nm. Ensure absolute cleanliness, replace seal (Y10/1).

46–0232 Removing, installing and checking bearing cover with pitman arm shaft

Preceding work:
Removing and installing steering gear (46–3400)

Operation No. of operation texts and operation values or standard texts and flat rates:
46–3256

A. Steering gear with adjusting screw at top, models 124 (except 124.034/036), 201, 202

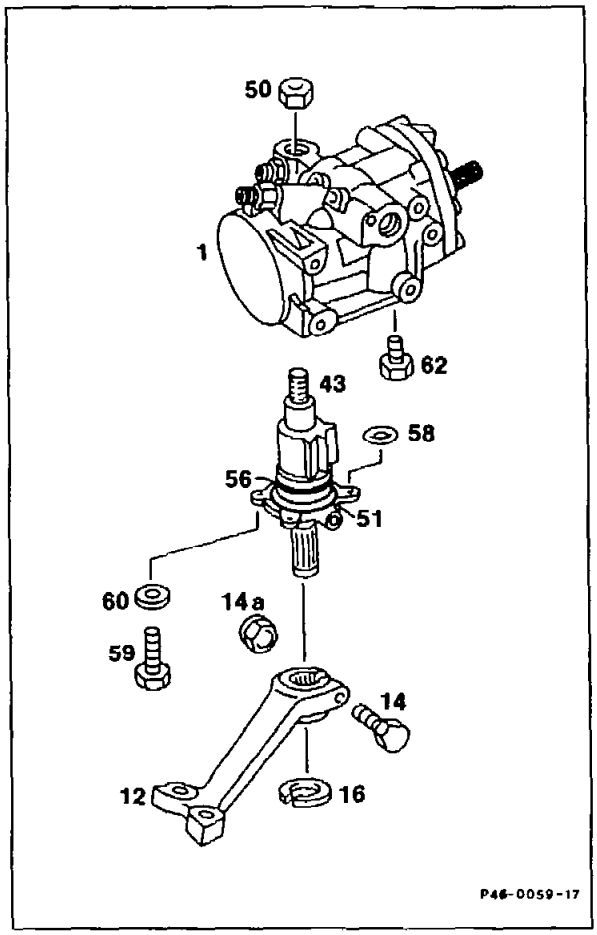

Steering gear (1)	mount on assembly support 140 589 00 59 00 with two screws and clamp in vise (number 1).
Distance "a" between pitman arm (12) and pitman arm shaft/bearing cover (51)	measure and note size (number 2).
Locking ring (16)	detach, attach, replace (number 3).

Pitman arm (12)	pull off, by unscrewing nut (14a) and taking off bolt (14) (numbers 3 and 4). When installing pitman arm shaft and pitman arm, coat with Loctite 270 and fit on up to measured size "a" (number 2). Replace nut (14a) and attach with bolt (14), 55 Nm (numbers 17, 18).
Pitman arm shaft (43)	turn into center position (number 5).
Self-locking bolts (59)	unscrew, screw in, replace (numbers 6, 13) 30–35 Nm.
Self-locking collar nut (50)	unscrew, screw on, replace (numbers 7, 15) 60–65 Nm.
Pitman arm shaft (43)	press out of steering gear housing with pitman arm shaft/bearing cover (51) by turning adjusting screw clockwise (number 8, pay attention to center position). After installing pitman arm shaft, check friction torque of steering gear and adjust (number 14).
O-rings (56 and 58)	replace, ensure correctly fitted (number 10).

Special tools

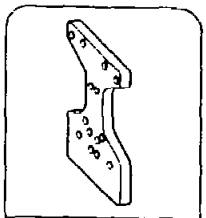

140 589 00 59 00
46

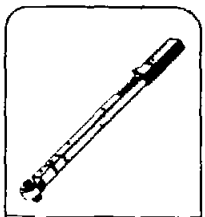

001 589 67 21 00
00

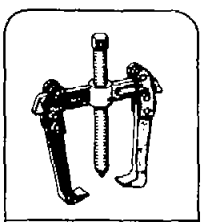

000 589 88 33 00
00

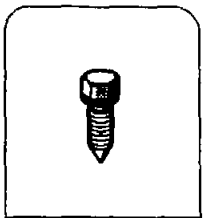

201 589 06 21 00
40 46

⚠

Pay attention to "Important notes regarding repair of steering gear" (46–0230)

Removal

1 Attach steering gear to the assembly support 140 589 00 59 00 with two bolts and clamp in vise.

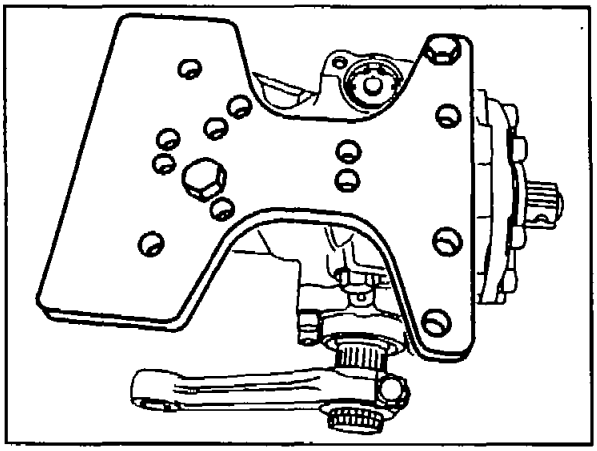

P46-5480-13

2 Measure distance "a" between pitman arm (12) and pitman arm shaft/bearing cover (51) and note size "a".

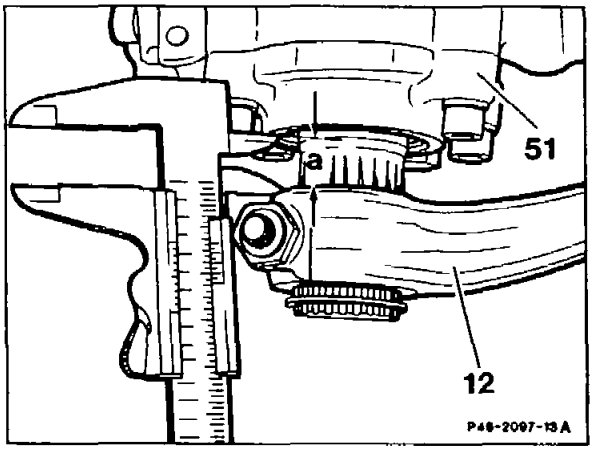

3 Take off locking ring (16). Unscrew nut (14a) and take off bolt (14).

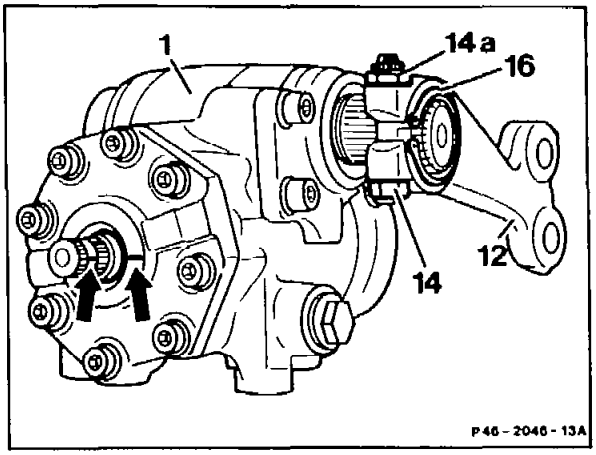

1 Steering gear
12 Pitman arm

4 Pull pitman arm (12) off pitman arm shaft, use puller 000 589 88 33 00, if necessary.

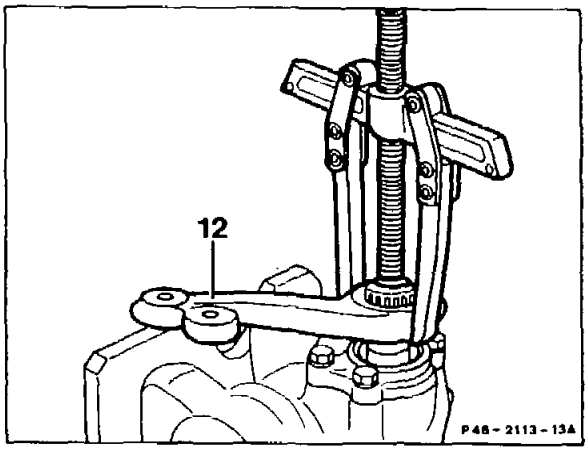

5 Turn steering gear into **center position** by unscrewing bolt (62) and screwing in center position inspection bolt 201 589 06 21 00.

⚠

If the steering gear is not in the center position, the steering gear housing will be damaged on the inside when pressing out the pitman arm shaft together with bearing cover/pitman arm shaft.

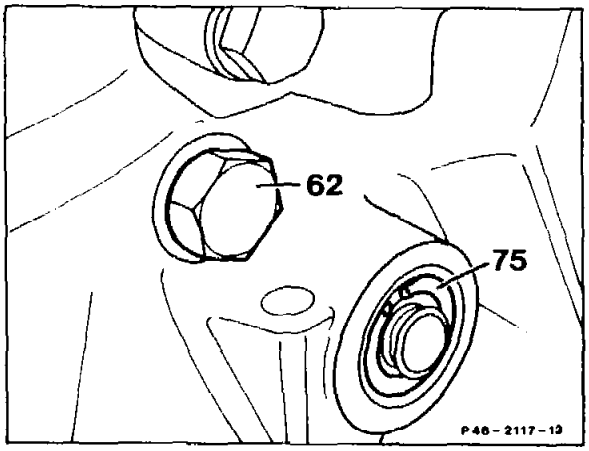

Position steering gear with external centering (as of 1/90) to mark (arrows).

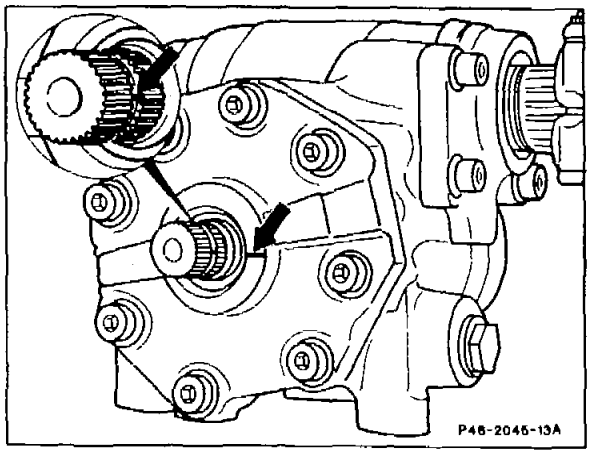

6 Unscrew self-locking bolts (59) for attaching pitman arm shaft/bearing cover (51).

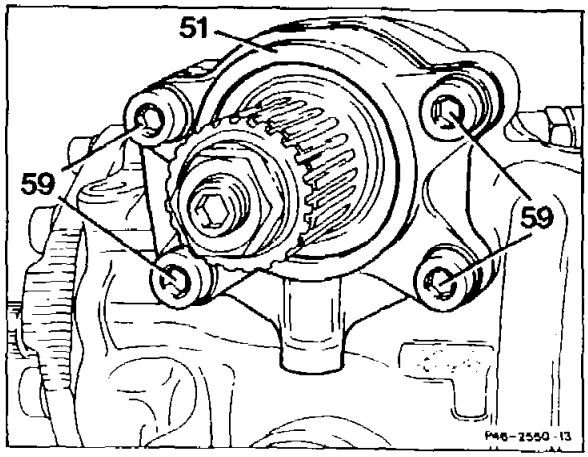

7 Unscrew collar nut from adjusting screw, holding adjusting screw tight.

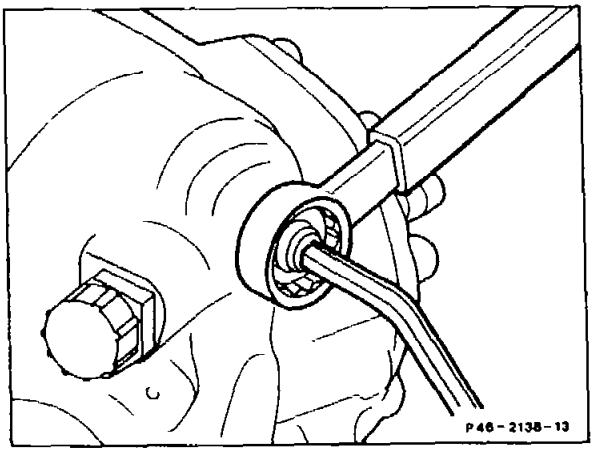

8 With steering in **center position**, turn adjusting screw clockwise; this causes the pitman arm shaft (43) to be pressed out of the steering gear housing together with the bearing cover/pitman arm shaft (51).

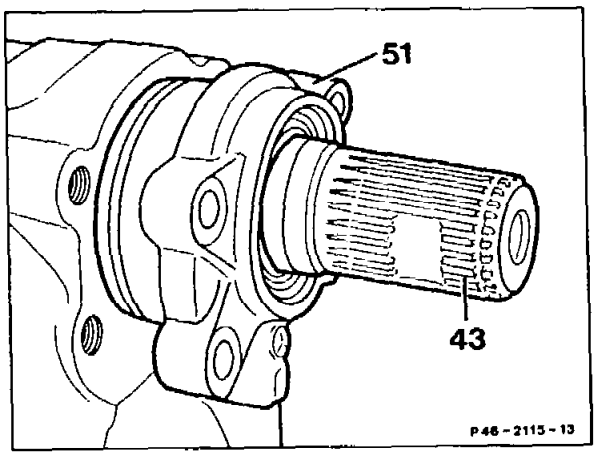

Installation

9 Turn steering worm so that the center tooth gap of the power piston (arrow) is positioned in the middle of the opening in the steering gear housing.

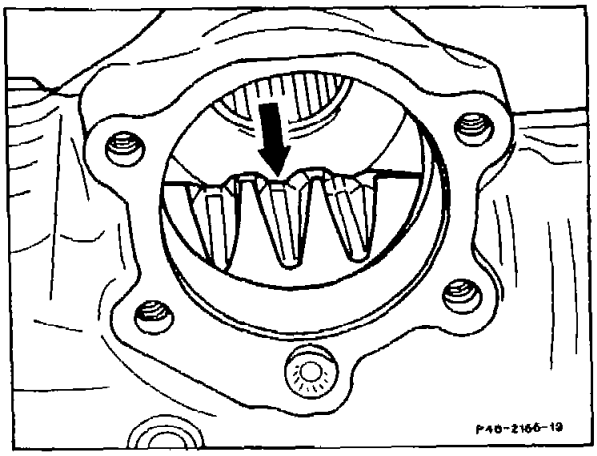

10 Replace O-rings. Introduce pitman arm shaft/bearing cover (51) together with pitman arm shaft into the steering gear housing so that the center tooth of the pitman arm shaft meshes into the middle tooth gap of the power piston. Ensure that the O-rings are properly seated (arrow).

11 Turn pitman arm shaft/bearing cover (51) so that oil passage and bore are aligned with those of the steering gear.

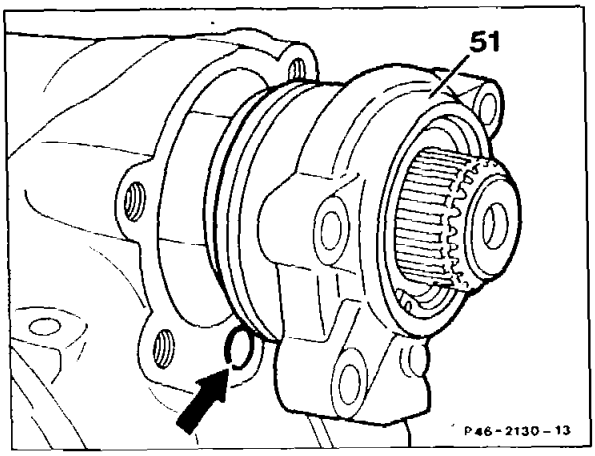

12 Screw adjusting screw (45) into the steering gear housing far enough for it to make contact. Unscrew center position inspection bolt and fit screw plug with new seal (35–40 Nm).

Note

Only by screwing in the adjusting screw is it ensured that the pitman arm shaft/bearing cover rests against the steering gear housing.

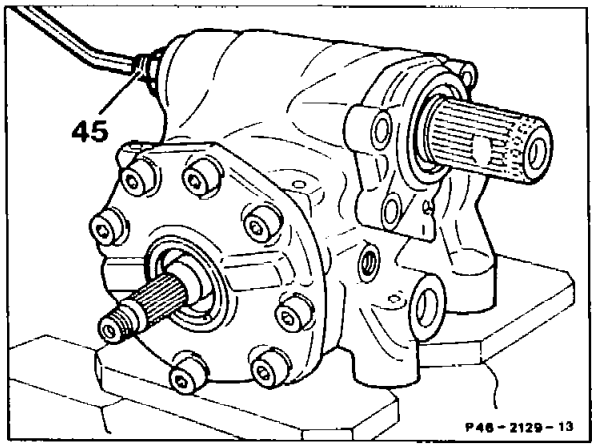

13 Tighten pitman arm shaft/bearing cover (51) with new self-locking bolts (59), (30–35 Nm).

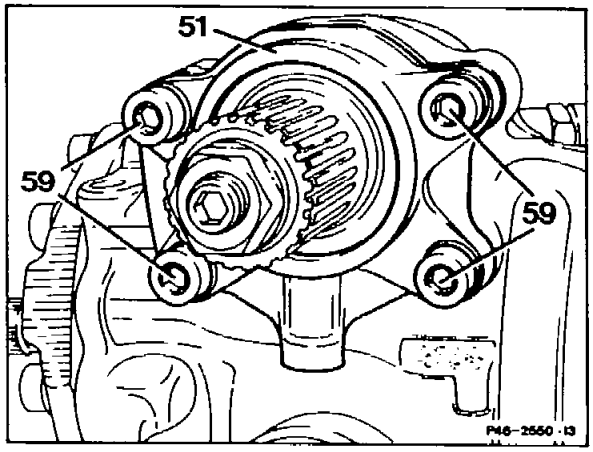

14 Check, adjust friction torque of steering gear (46–0120).

Note

A slight pressure point must be felt when turning beyond the center position. The steering gear must move freely when the steering shaft is turned from lock to lock.

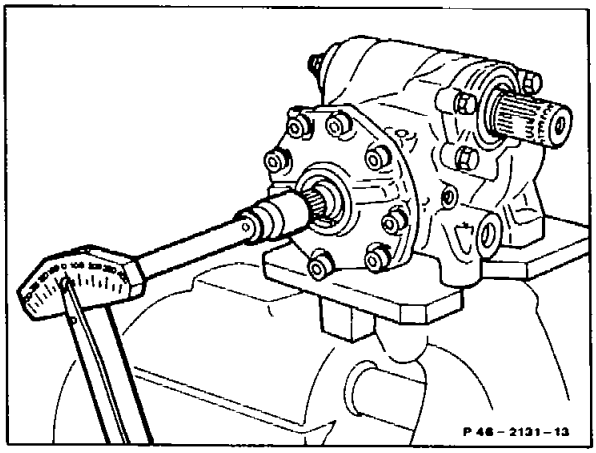

15 Screw collar nut onto the adjusting screw and tighten to 60–65 Nm, holding the adjusting screw tight.

16 Re-check friction torque (46–0120).

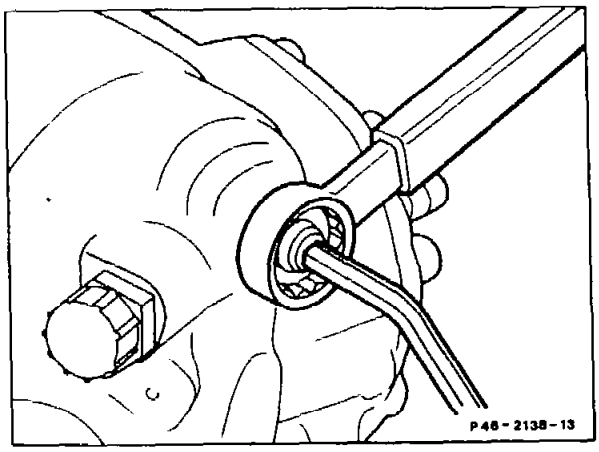

17 Clean shaft spline on the pitman arm shaft and on the pitman arm (12). Both parts must be free of oil and grease.
Coat shaft spline of pitman arm **with Loctite 270.** Then, push pitman arm shaft to size "a" measured in number 2 on to the pitman arm shaft in line with the cross nut.

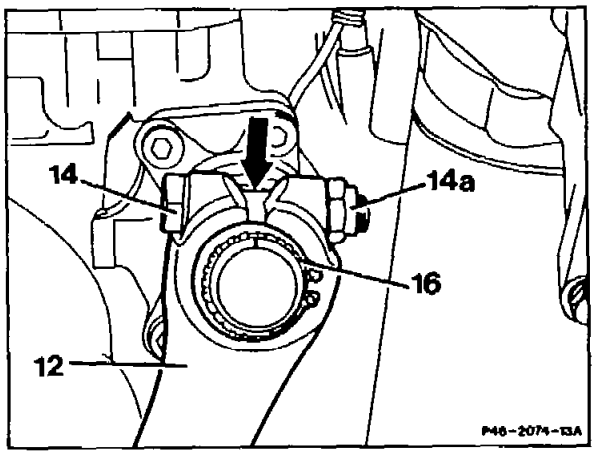

18 Insert bolt (14). Replace nut (14a), 55 Nm.

19 Install new locking ring (16). Ensure it is correctly seated.

20 Detach steering gear from assembly support.

B. Steering gear with adjusting screw below, models 124.034/036, 129 and 140

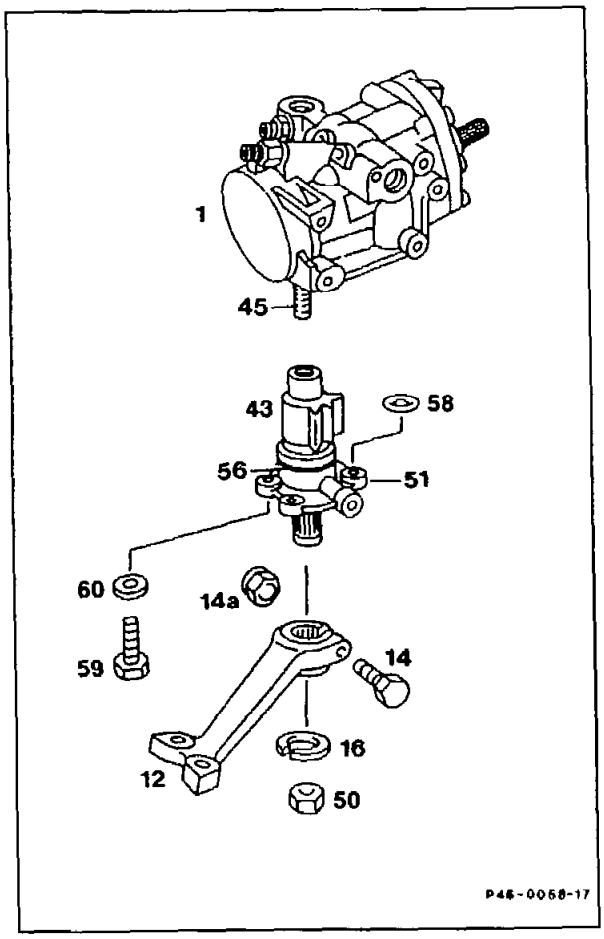

Steering gear (1)	attach on assembly support 140 589 00 59 00 with two bolts and clamp in vise (number 1).
Distance "a" between pitman arm (12) and pitman arm shaft/bearing cover (51)	measure and note size "a" (number 2).
Locking ring (16)	detach, attach, replace (number 3).
Pitman arm (12)	pull off, by unscrewing nut (14a) and taking off bolt (14) (numbers 3–5). When installing, coat pitman arm shaft and pitman arm with Loctite 270 and fit on to the measured size "a". Install new nut (14a) and bolt (14), 55 Nm (numbers 20, 21).
Pitman arm shaft (43)	turn into center position (number 4).
Self-locking bolts (59)	unscrew, screw in, replace (numbers 6, 16) 30–35 Nm.

Self-locking collar nut (50)	unscrew, screw on, replace (numbers 7, 18) 60–65 Nm.
Pitman arm shaft (43)	press out of the steering gear housing with the pitman arm shaft/bearing cover (51) by turning the adjusting screw (45) clockwise. (Number 9, pay attention to center position). After installing pitman arm shaft, check and adjust friction torque of steering gear (number 17).
Needle bearing in steering gear housing	check whether any bearing needles have dropped out (32 needles); insert bearing needles with grease, if necessary (number 10).
Shop-made assembly mandrel (090)	insert in steering gear (number 11).
O-rings (56 and 58)	replace, ensure correctly fitted (number 13).

Special tools

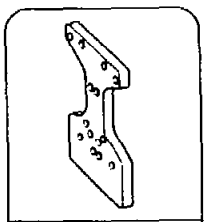

140 589 00 59 00
46

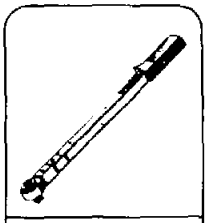

001 589 67 21 00
00

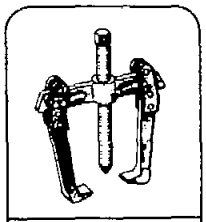

000 589 88 33 00
00

Shop-made tool
Mandrel (090).

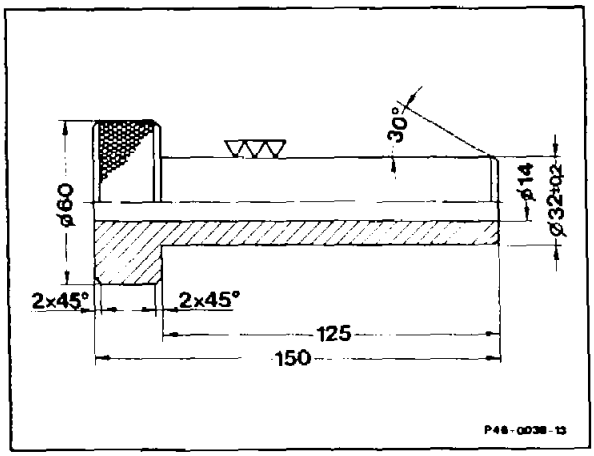

⚠

Pay attention to "Important notes regarding repair of steering gear" (46–0230).

Removal

1 Mount steering gear on assembly support 140 589 00 59 00 with two bolts and clamp in vise.

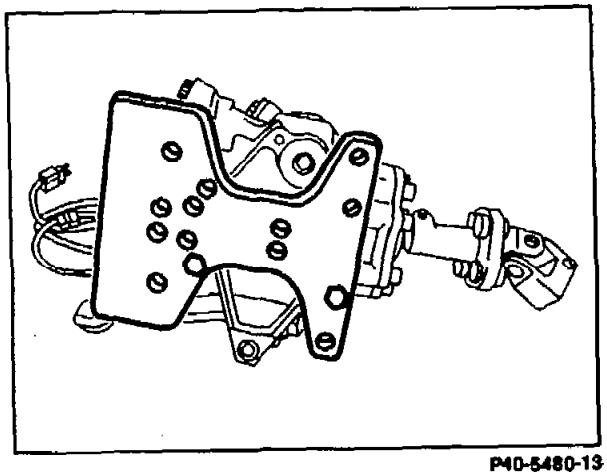

P40-5480-13

2 Measure distance "a" between pitman arm (12) and pitman arm shaft/bearing cover (51) and note size "a".

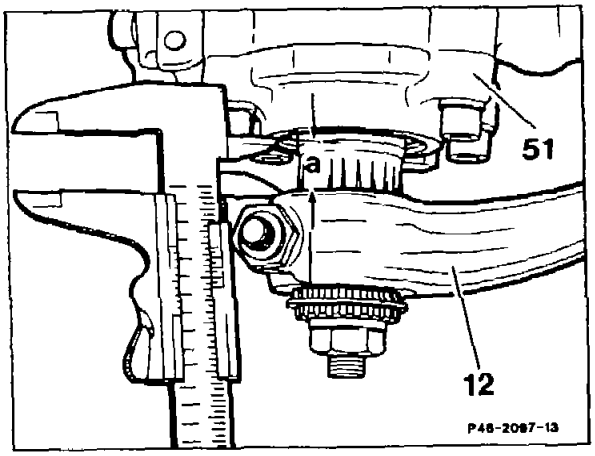

3 Take off locking ring (16). Unscrew nut (14a) and take off bolt (14).

4 Turn steering into center position so that markings are aligned (arrow).

⚠

If the steering gear is not in the center position, the steering gear housing will be damaged internally when pressing out the pitman arm shaft with the bearing cover/pitman arm shaft.

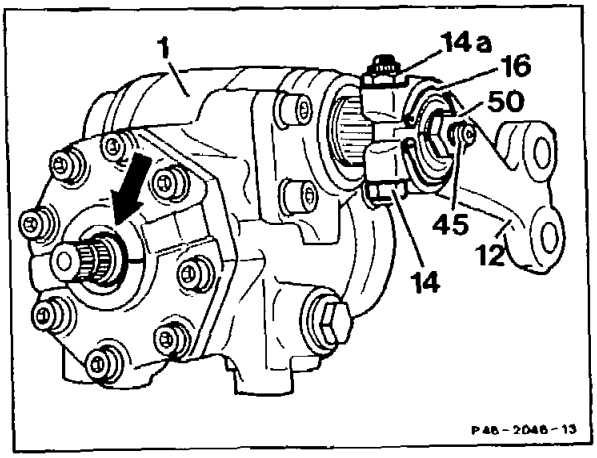

5 Pull pitman arm (12) off the pitman arm shaft, use puller 000 589 88 33 00, if necessary.

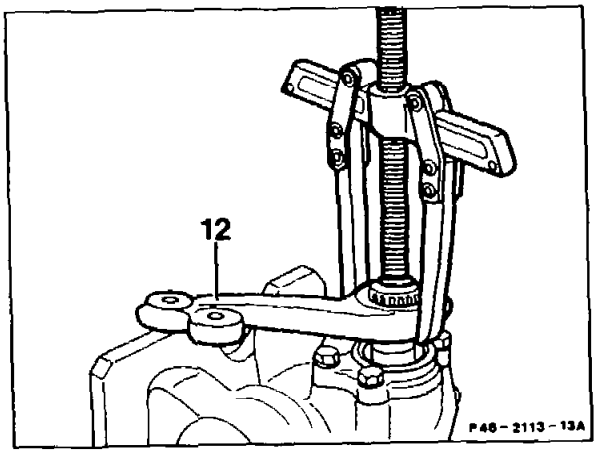

6 Unscrew self-locking bolts (59) for attaching pitman arm shaft/bearing cover (51).

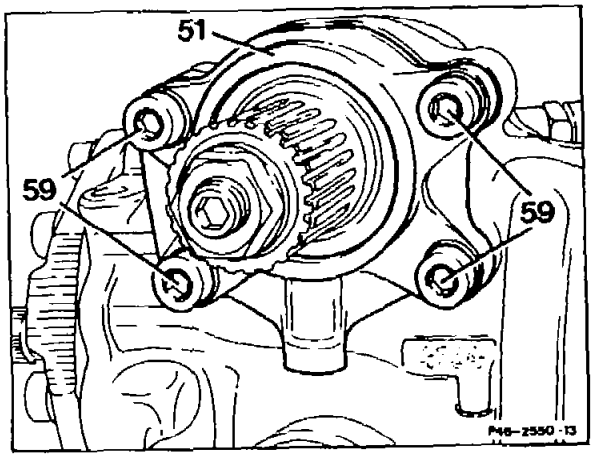

7 Unscrew collar nut (50) from the adjusting screw (45), holding adjusting screw (45) tight.

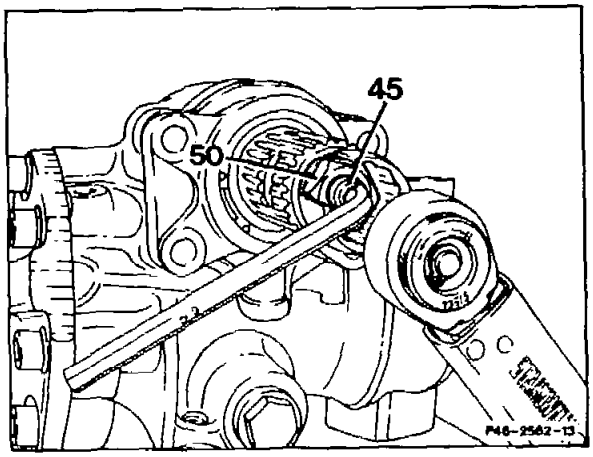

8 Rotate assembly support 140 589 00 59 00 so that the pitman arm shaft is positioned vertically.

9 With steering in **center position**, turn adjusting screw (45) clockwise; this causes the pitman arm shaft (43) together with the pitman arm shaft/bearing cover (51) to be pressed out of the steering housing (1).

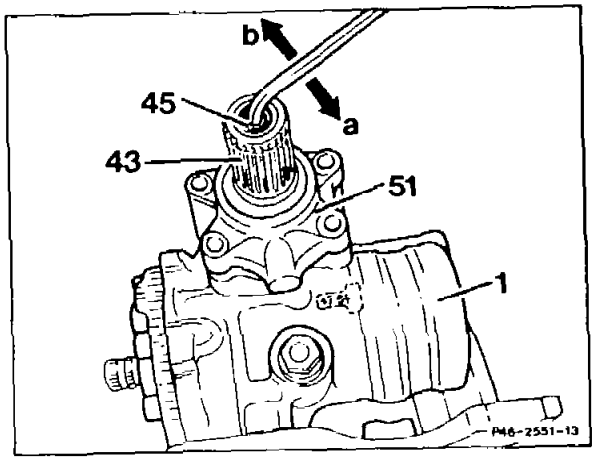

10 Examine the needle bearing (99) and the O-ring located behind it for signs of damage and wear. Ensure that none of the 32 bearing needles drops out of the needle bearing; insert bearing needles with grease if necessary.

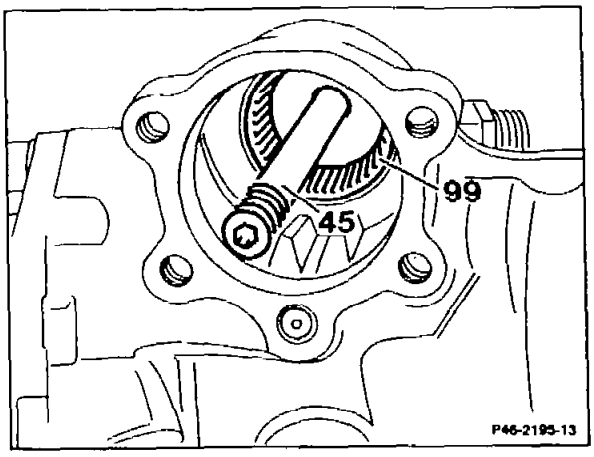

11 Prevent the bearing needles in the steering gear housing from dropping out by pushing the shop-made mandrel (090) over the adjusting screw and securing with the collar nut.

Note

A needle bearing with cage has been installed as of approx. 6/92.

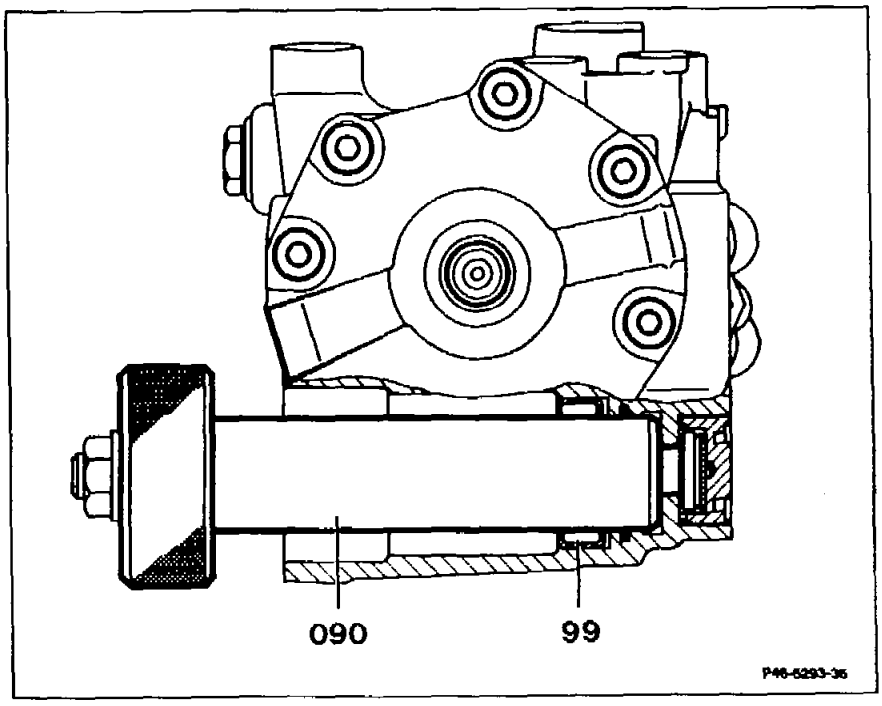

Installation

12 Rotate steering worm so that the middle tooth gap of the power piston (arrow) is located in the center of the opening in the steering gear housing.

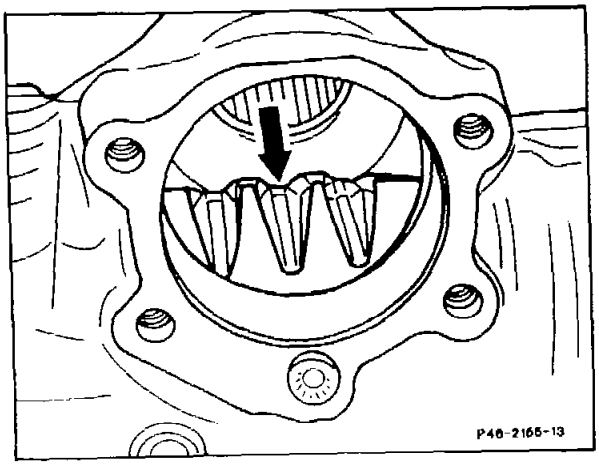

Note
On steering gear 765.94 (model 140), turn the steering worm until the center tooth flank (arrow) is in the center of the opening in the steering gear.

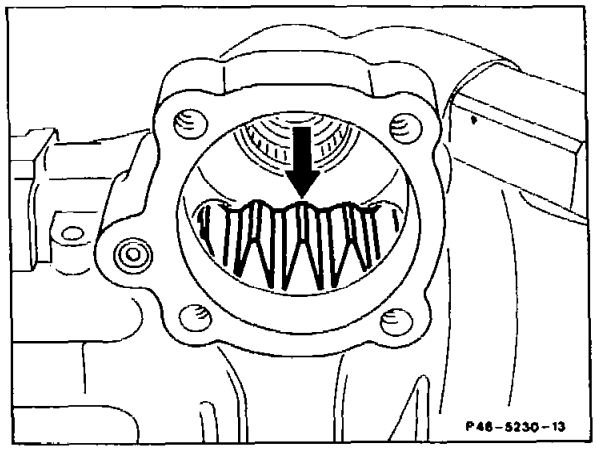

13 Replace O-rings. Introduce pitman arm shaft/bearing cover (51) together with pitman arm shaft into the steering gear housing so that the center tooth of the pitman arm shaft meshes into the middle tooth gap of the power piston. Ensure that the O-rings are correctly seated.

14 Rotate pitman arm shaft/bearing cover (51) so that oil passage and bore are aligned with those of the steering gear.

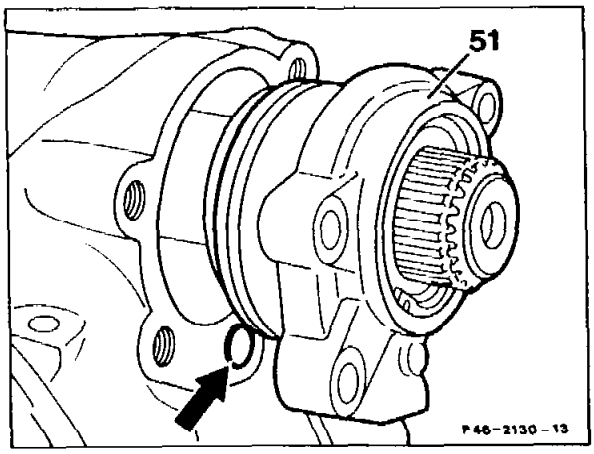

15 Turn adjusting screw (45) in the pitman arm shaft (43) far enough to the left for the pitman arm shaft to be making contact in the steering gear housing.

Note
Only by screwing in the adjusting screw (45) is it ensured that the pitman arm shaft/bearing cover is touching the steering gear housing.

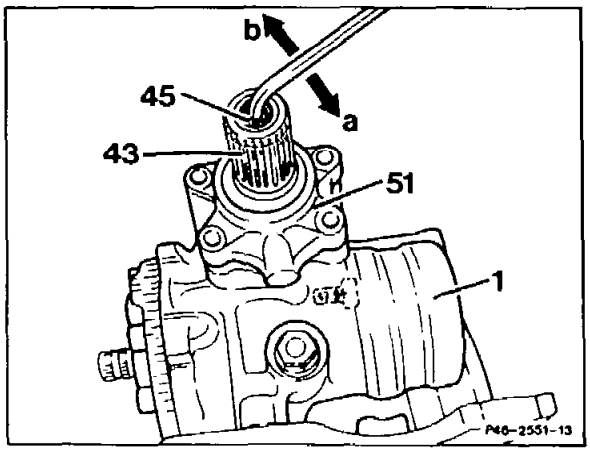

16 Tighten pitman arm shaft/bearing cover (51) with new self-locking bolts (59)
Tightening torque 30–35 Nm.

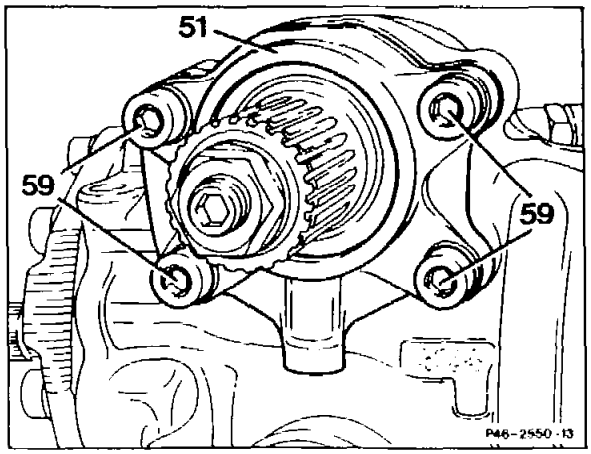

17 Test and adjust friction torque of the steering gear (46–0120).

Note
A slight pressure point must be felt when rotating beyond the center point. The steering gear must operate easily when the steering worm is turned from lock to lock.

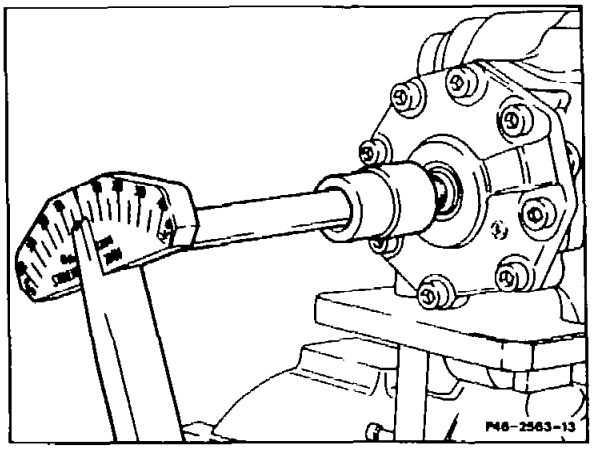

18 Screw collar nut (50) onto the adjusting screw (45) and tighten to 60–65 Nm, holding the adjusting screw (45) tight.

19 Re-check friction torque (46–0120).

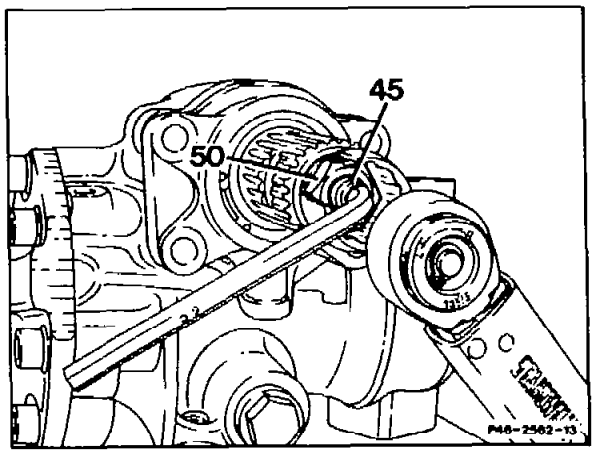

20 Clean shaft spline of the pitman arm shaft and pitman arm (12). Both parts must be free of oil and grease.
Coat shaft spline of pitman arm (12) **with Loctite 270**. Then, push pitman arm onto the pitman arm shaft to the size "a" measured in number 2 in line with the cross nut.

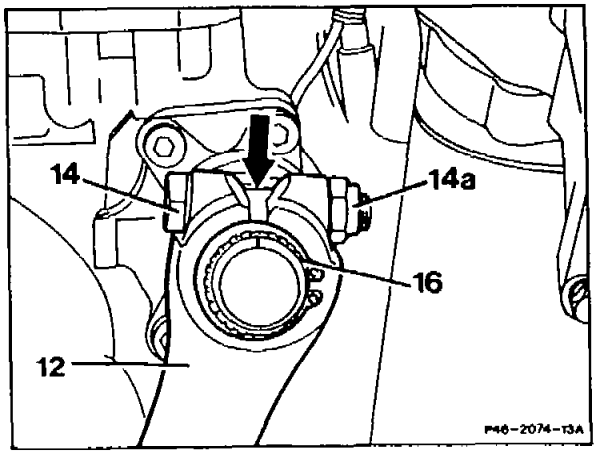

21 Push in bolt (14). Replace nut (14a), 55 Nm.

22 Install new locking ring (16). Ensure it is correctly seated.

23 Detach steering gear from assembly support.

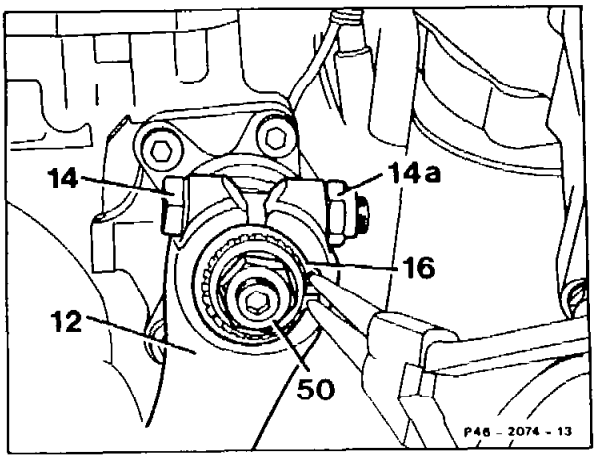

46–0233 Disassembling and assembling pitman arm shaft/bearing cover

Preceding work:
Removing and installing steering gear (46–3400)
Removing, installing and checking bearing cover with pitman arm shaft (46–0232)

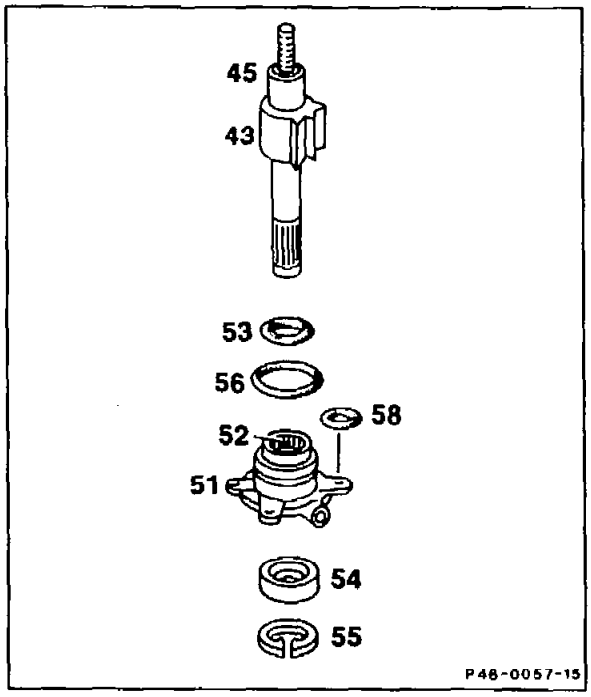

Pitman arm shaft/bearing cover (51)	remove from pitman arm shaft (43); when fitting on, ensure that the radial seal ring (54) is not damaged (number 1).
Locking ring (55)	remove, install (number 2).
Radial seal ring (54)	press out with screwdriver. Press in new radial seal ring (54) with mandrel 140 589 00 15 00 as far as the stop (number 3).
O-rings (53, 56, 58)	check, replace if necessary (number 4).
Needle sleeve (52)	examine for signs of wear and damage, replace pitman arm shaft/bearing cover (51) together with needle sleeve (52), if necessary (number 5).

Special tool

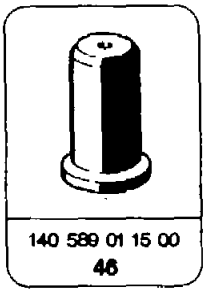

140 589 01 15 00
46

Disassembling and assembling

1 Take pitman arm shaft/bearing cover (51) off the pitman arm shaft (43).

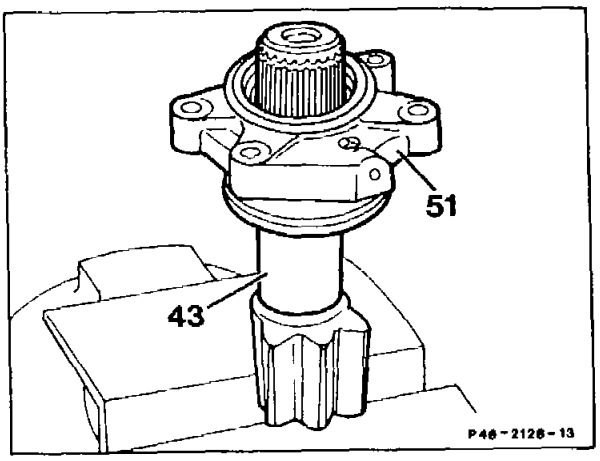

⚠

When fitting on, ensure that the new radial seal ring on the teeth of the pitman arm shaft is not damaged.

2 Remove locking ring (55) from the pitman arm shaft/bearing cover.

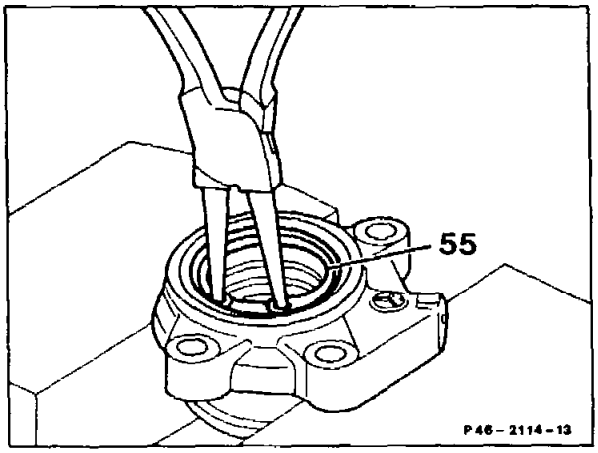

3 Press radial seal ring (54) out of the pitman arm shaft/bearing cover with a screwdriver.

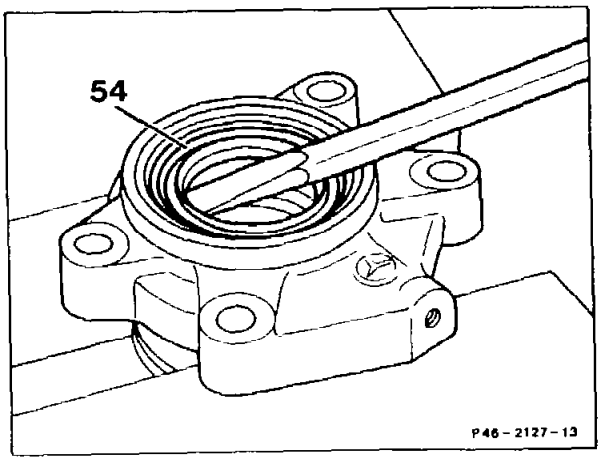

Installation instruction

Press new radial seal ring into the pitman arm shaft/bearing cover with mandrel 140 589 01 15 00, apply a light coating of universal grease to the sealing lip and insert locking ring (55).

4 Take O-rings or Teflon ring (53 and 56) out of the pitman arm shaft/bearing cover (51); check, replace if necessary.

Installation note
Insert O-rings or Teflon rings (53 and 56) into the pitman arm shaft/bearing cover.

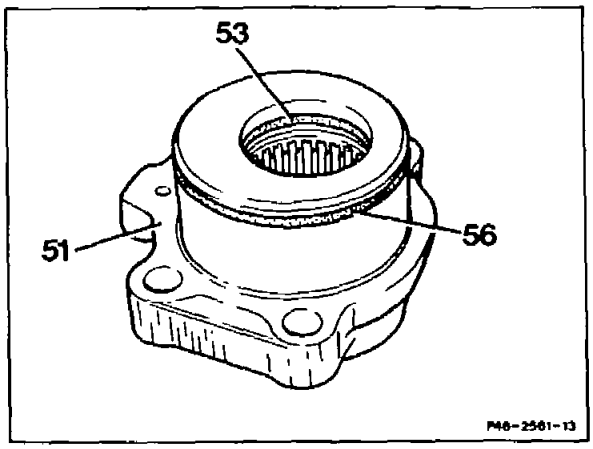

5 Examine needle sleeve (52) in pitman arm shaft/bearing cover for signs of wear.
If the needle sleeve (52) is worn, replace pitman arm shaft/bearing cover complete.

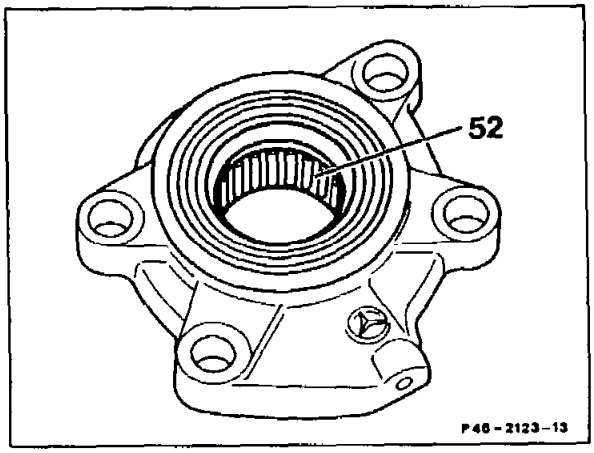

6 Examine pitman arm shaft (43) at the tooth segment and at the bearing points for signs of damage and wear as well as for twist (detectable from displaced teeth).

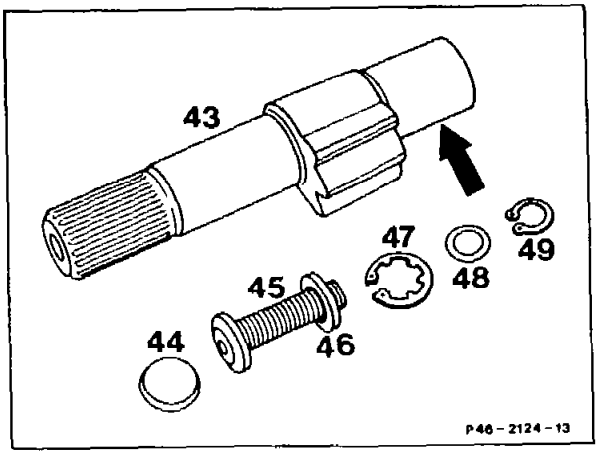

46–0234 Removing and installing adjusting screw

Preceding work:
Removing and installing steering gear (46–3400)
Removing, installing and checking bearing cover with pitman arm shaft (46–0232)

A. Steering gear with adjusting screw at top, models 124 (except 124.034/036), 201 and 202

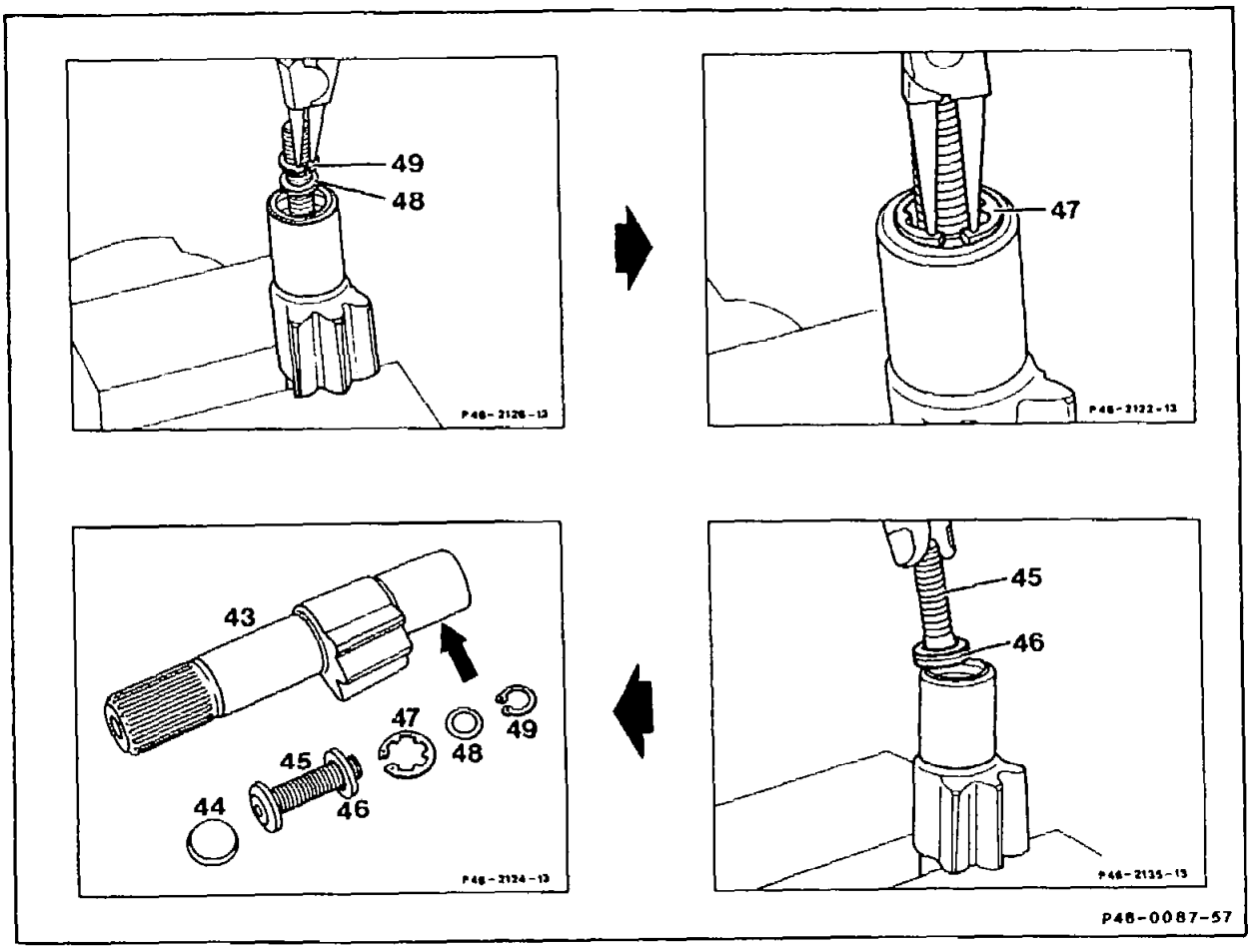

Locking ring (49) . . . . . remove and install, take off thrust ring (48).

Locking ring (47) . . . . . remove and install, replace. Take off adjusting screw (45) and thrust washer (46).
When installing, ensure locking ring (47) is properly seated. The adjusting screw (45) should be installed in the pitman arm shaft (43) free of play, if possible.
To achieve this, thrust washers (46) are available in thicknesses from 2.65–3.10 mm in graduations of 0.05 mm.

Pitman arm shaft (43)	examine for signs of damage and wear at the tooth segment and at the bearing points, and also for twist (detectable from displaced teeth).

B. Steering gear with adjusting screw below, models 124.034/036, 129

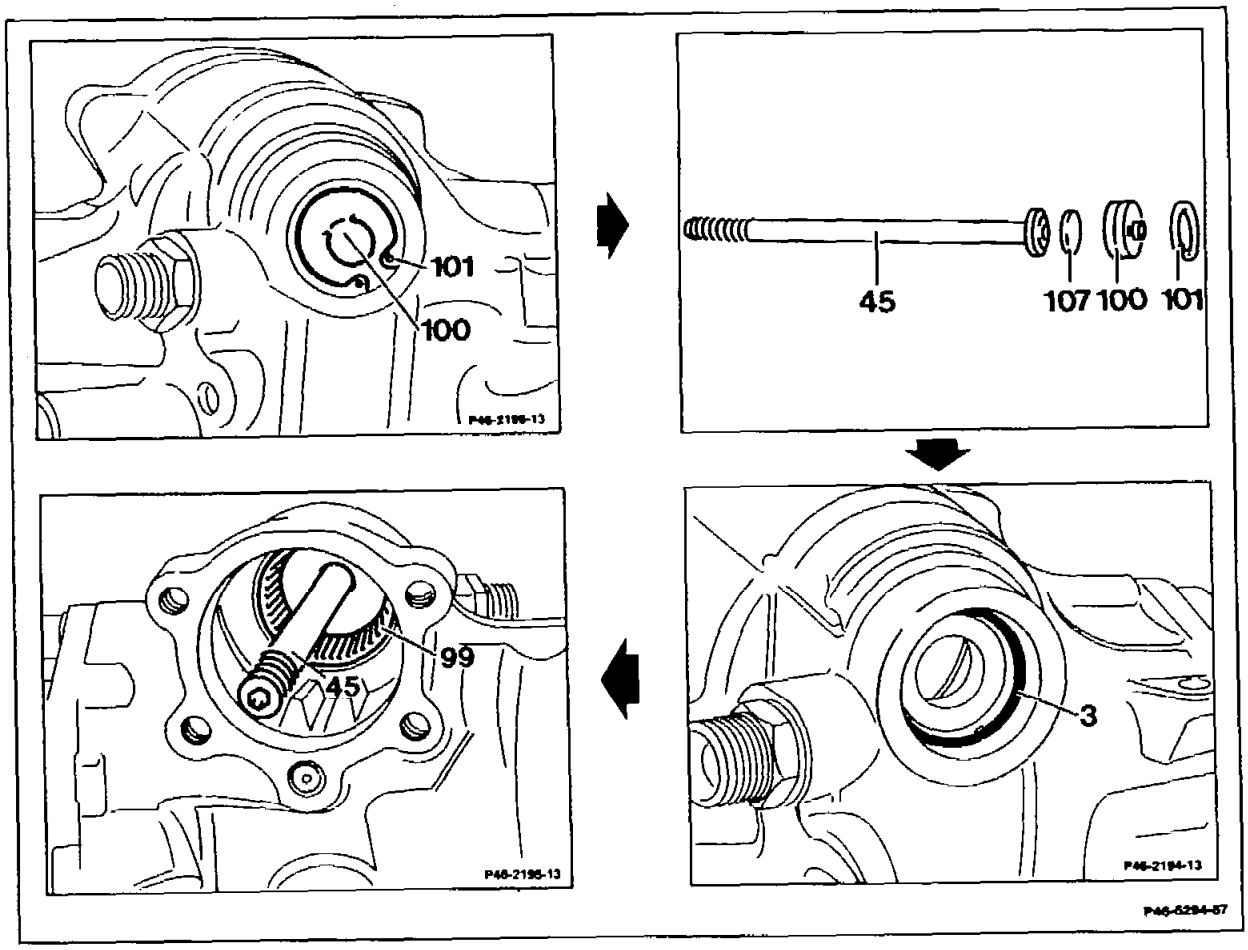

Locking ring (101)	remove and install, replace, if necessary.
End cover (100)	press out, press in.
Adjusting screw (45)	remove, together with thrust washer (107), if fitted, from the steering gear housing. The adjusting screw (45) should be installed free of play, if possible. Thrust washers (107) are available for this purpose in thicknesses from 0.85–1.15 mm in graduations of 0.05 mm.
O-ring (3)	examine for signs of damage and wear, replace, if necessary.

Needle bearing (99) in steering gear housing	examine for bearing needles which may have dropped out (32 needles), insert bearing needles with grease, if necessary.
Pitman arm shaft (43)	check for damage and wear and for twisting (detectable at displaced teeth) on toothed sector and at the bearing points

C. Steering gear with adjusting screw below, model 140

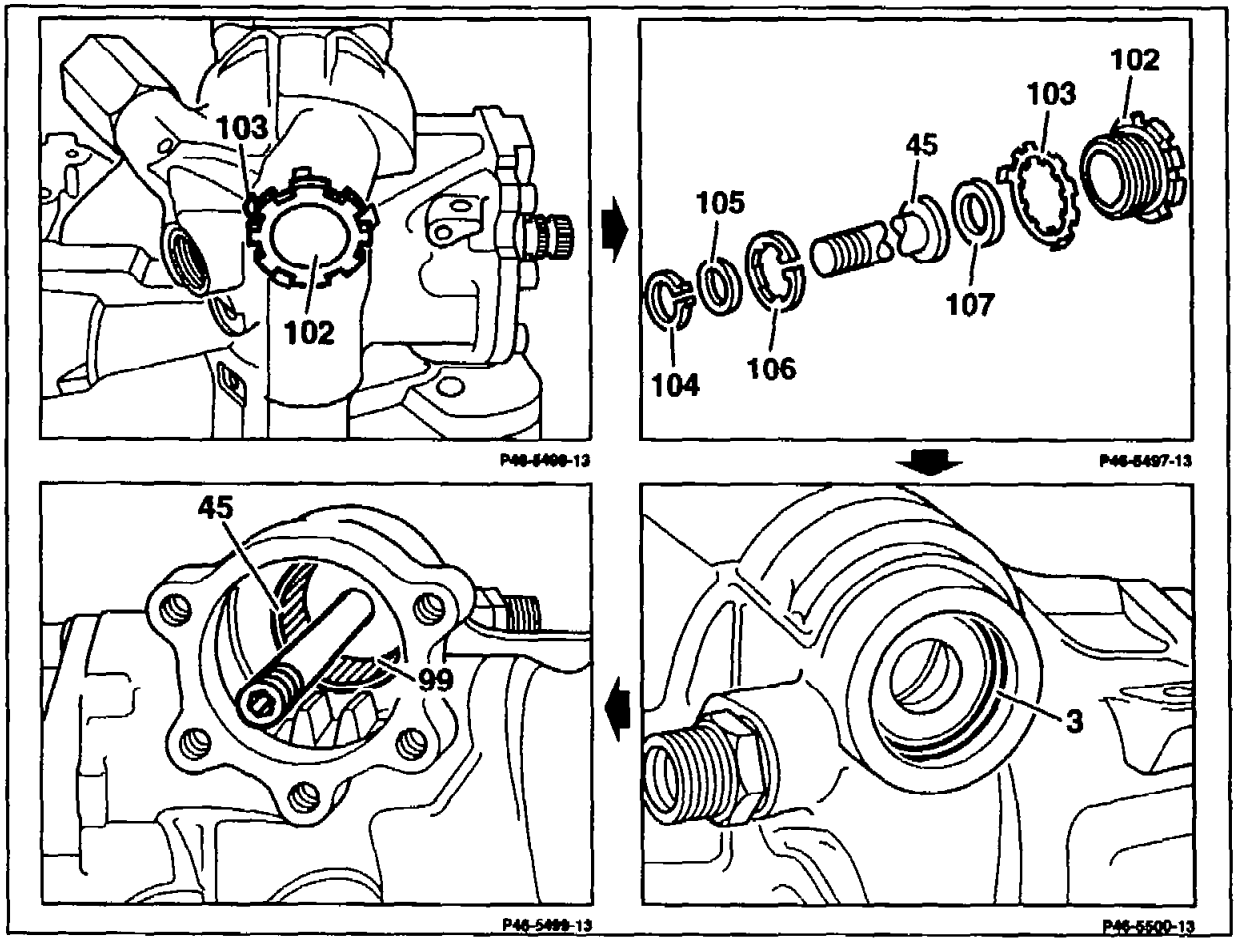

Screw plug (102)	loosen, tighten, 100 Nm (claw wrench 140 589 02 07 00). Replace locking ring (103)
Spring washer (104) and spacer washer (105)	remove, install at adjusting screw (45). Replace spring washer (104).
Locking ring (106)	remove, replace, install in screw plug (102).

Adjusting screw (45)	remove, install at screw plug (102)
Thrust washer (107)	remove, install
	Note The adjusting screw (45) should be installed free of play, if possible, in the screw plug (102). Thrust washers (107) are available for this purpose in thicknesses from 2.65–3.10 mm in graduations of 0.05 mm.
O-ring (30)	examine for signs of damage and wear, replace, if necessary.
Needle bearing (99) in steering gear housing	examine for bearing needles which may have dropped out (32 needles) insert bearing needles with grease, if necessary.

Special tool

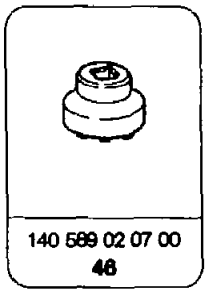

140 589 02 07 00
46

A. Version with end cover, models 124 (except 124.034/036) and 201

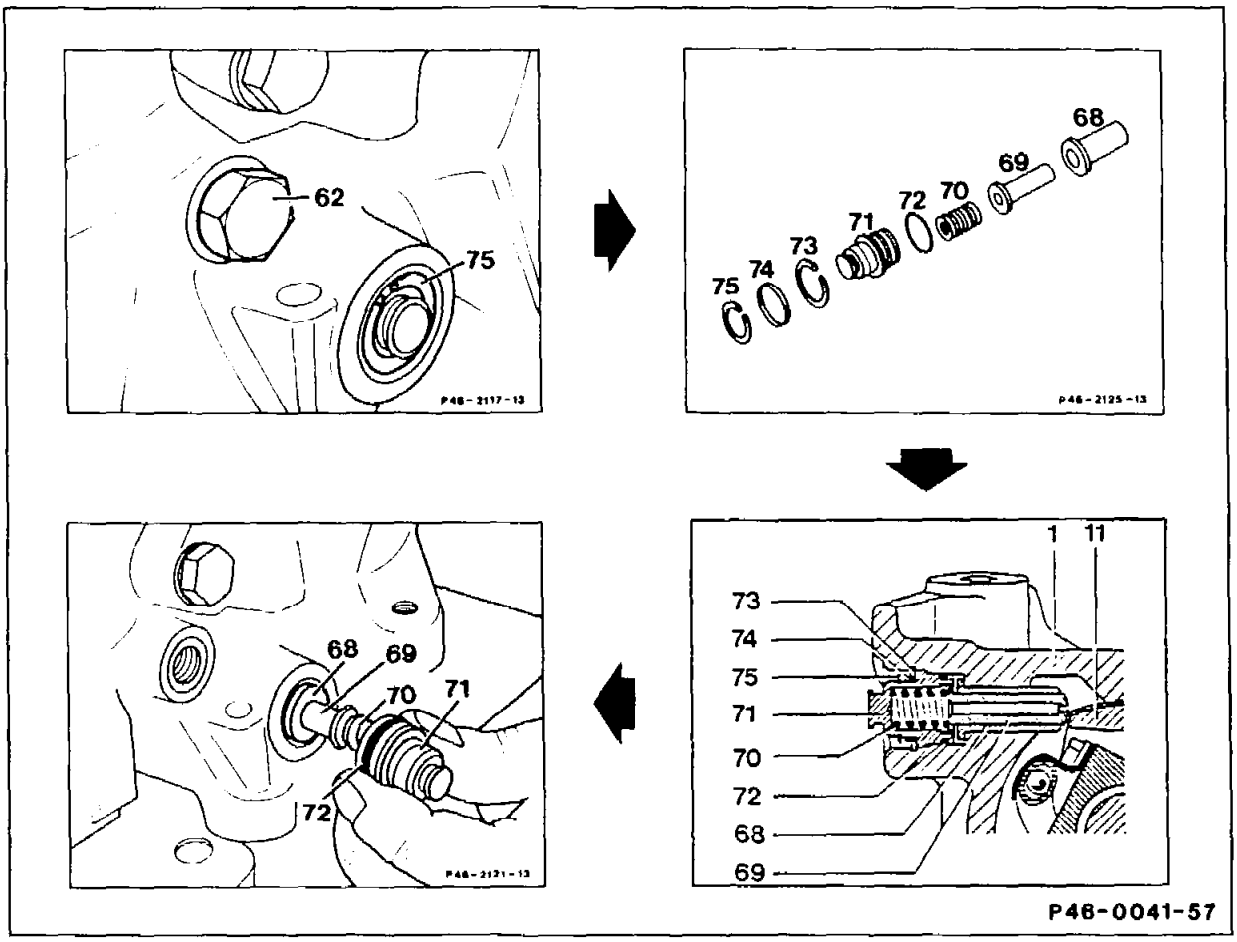

Screw plug (62)	unscrew, screw in for center position (35–40 Nm). Rotate steering worm until the power piston is approximately at left or right lock.
Locking ring (75), thrust ring (74), locking ring (73)	remove. When installing, ensure the locking rings are correctly seated.
End cover (71), spring (70), spring pin (69), bush (68)	remove from steering gear housing.
O-ring (72)	replace on end cover (71).

Compression spring (70)	measure length. Minimum length 19 ± 0.5 mm; replace compression spring if length is less than minimum.
Spring pin (69)	examine for signs of wear, replace if necessary.

B. Version with screw plug, model 129

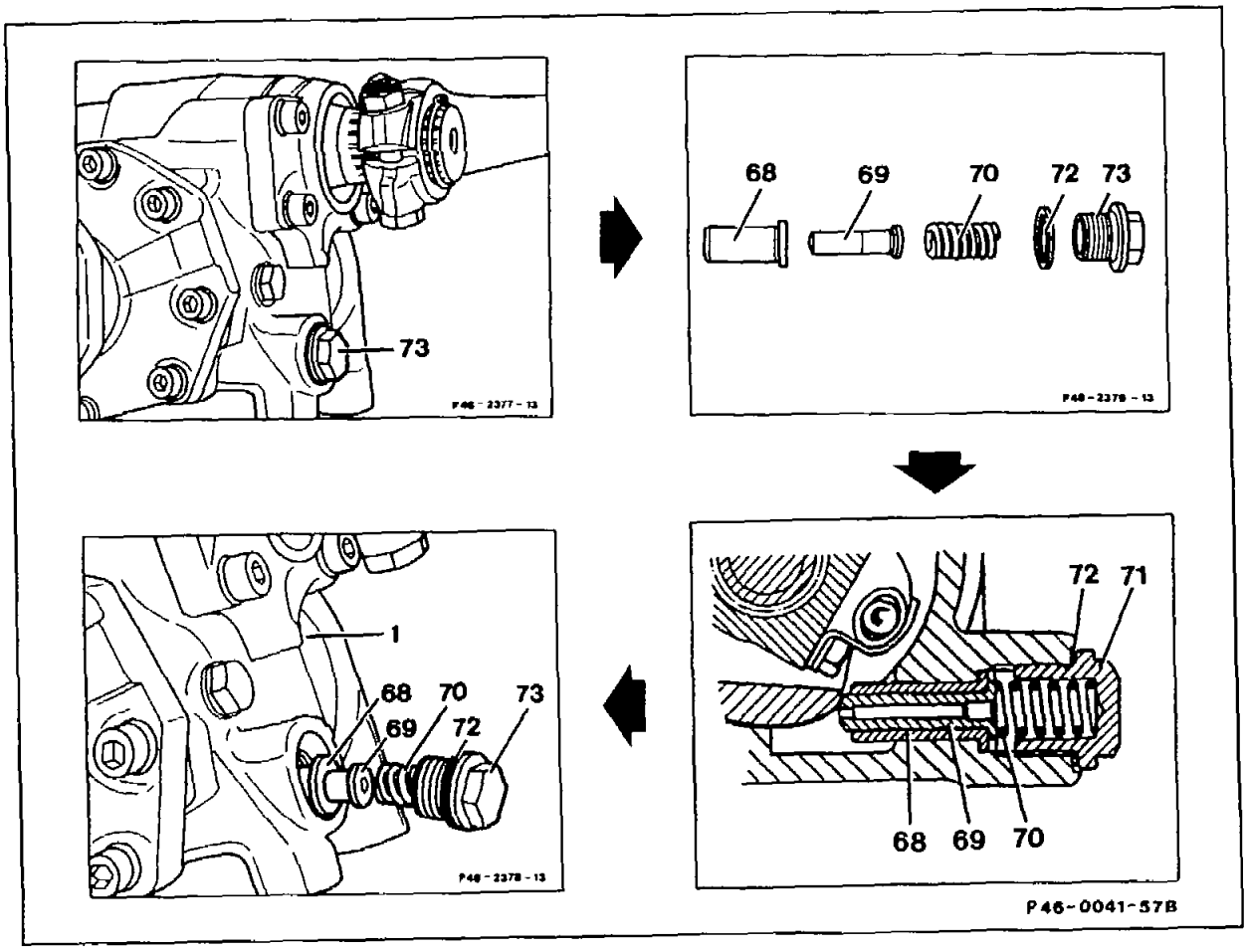

Screw plug (73)	unscrew, screw in, 50 ± 5 Nm, replace seal (72).
Compression spring (70), spring pin (69) and bush (68)	remove from steering gear housing, insert.
Compression spring (70)	check.
Spring pin (69)	examine for signs of wear, replace, if necessary.

Note
The play compensator is only effective in the center area of the steering gear. If a complaint is received about excessive steering play, the steering gear should be re-set (46–0120).

C. Version with screw plug, models 124.034/036, 140 and 202

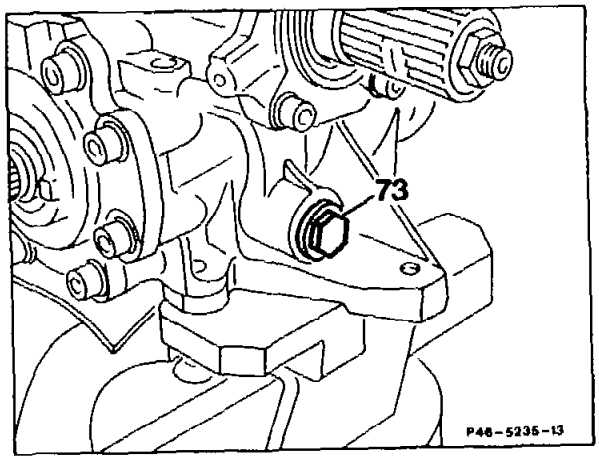

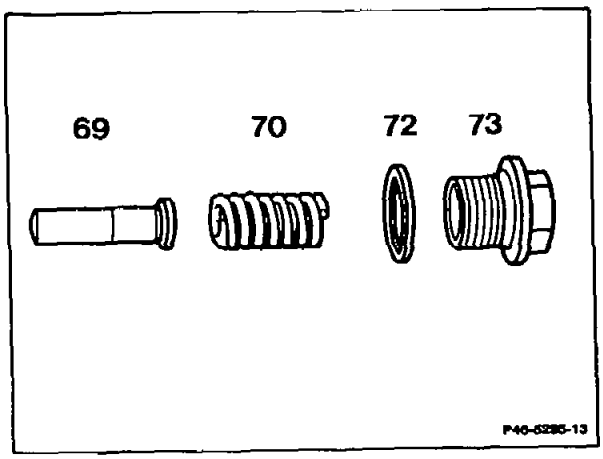

Screw plug (73)	unscrew, screw in, 50 ± 5 Nm, replace seal (72).
Compression spring (70), spring pin (69)	remove in turn from steering gear housing, insert.
Compression spring (70)	check.
Spring pin (69)	examine for signs of wear, replace, if necessary.

Note
The play compensator is only effective in the center area of the steering gear. If a complaint is received about excessive steering play, the steering gear should be re-set (46–0120).

46–0236 Removing and installing steering shaft/bearing cover, replacing radial seal ring

Preceding work:
Removing and installing steering gear (46–3400).
Removing and installing bearing cover/pitman arm shaft (46–0232).
Removing and installing play compensator (46–0235).

A. Steering shaft/bearing cover with locking ring (up to 10/87)

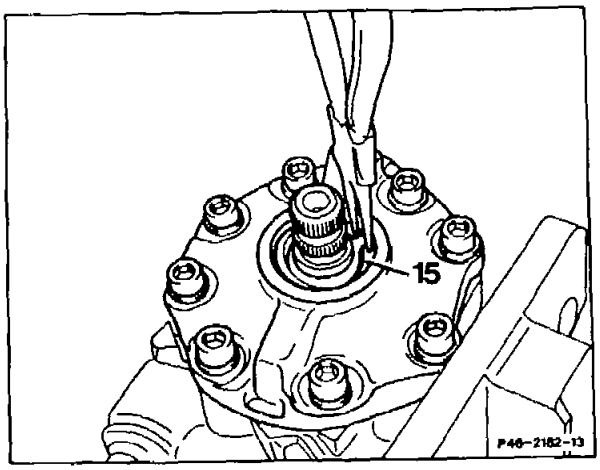

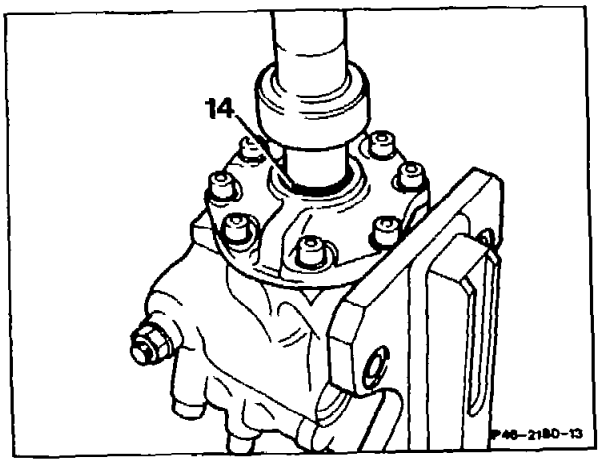

Steering gear (1)	attach to assembly support 140 589 00 59 00 with two bolts and clamp in vise (number 1).
Locking ring (15)	remove from bearing cover/steering shaft. When inserting locking ring, ensure correct seating.
Radial seal ring (14)	press out of the steering shaft/bearing cover with suitable screwdriver. Press in new seal with mandrel 201 589 06 15 00 and coat sealing lip with multipurpose grease.

Special tools

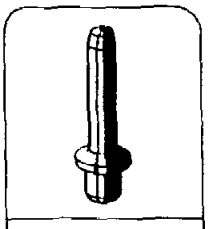

201 589 06 15 00
46

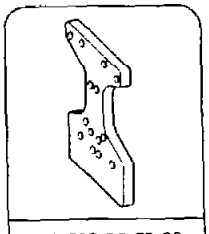

140 589 00 59 00
46

B. Bearing cover/steering shaft with collar (as of 10/87)

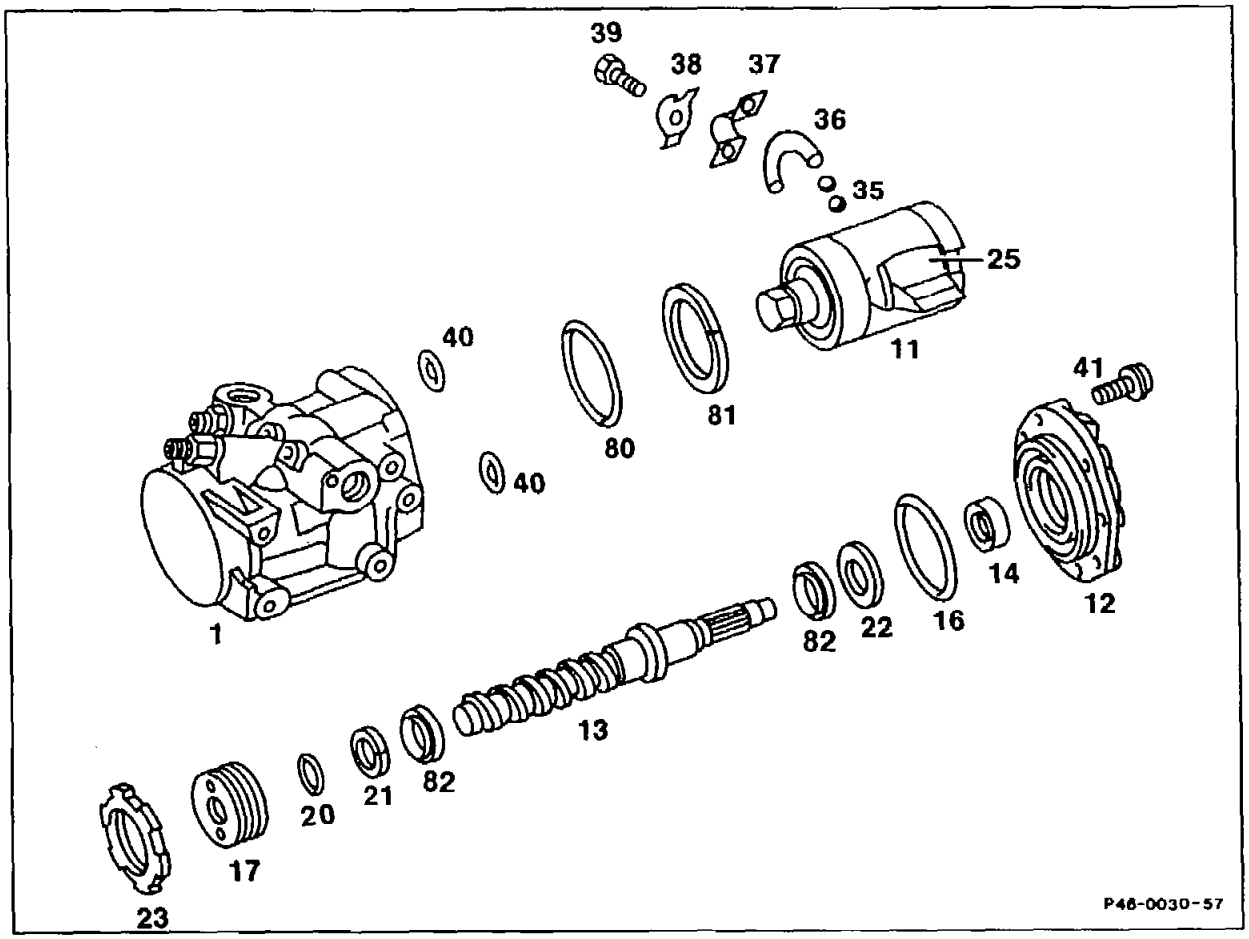

Steering gear (1)	attach to assembly support 140 589 00 59 00 with two bolts and clamp in vise (number 1).
Bolts (41)	remove, install, replace, 25–30 Nm (numbers 2, 32).
Steering shaft (13)	rotate counter-clockwise until the steering shaft/bearing cover (12) is raised approx. 10 mm (number 3).

Steering shaft/bearing cover (12) together with steering shaft (13) and power piston (11)	remove from the steering gear housing (number 4). When installing, carefully insert straight edge of steering nut (25) into control valve (number 31).
Power piston (11)	carefully clamp in a vise with aluminum protective jaws (number 5).
Friction torque of recirculating ball assembly ...	measure with friction torquemeter 001 589 81 21 00 and wrench insert 123 589 00 80 00 and note value (number 6). After assembling recirculating ball assembly, the measured value should again be achieved (number 28).
Bolts (39)	remove, screw in, 12–15 Nm, take off guard plate (38) and retaining clip (37) (numbers 7, 27).
Ball guide halves (36)	take off. When installing, insert 6 or 7 (model 140) balls (35) with grease into the ball guide halves. Insert ball guide halves into steering nut (numbers 7, 25, 26).
Steering shaft (13)	unscrew from steering nut (25). Ensure that none of the 23 or 24 balls (model 140) is lost (number 8). When installing steering shaft, introduce balls into recirculating ball assembly by slowly turning (number 24).
Bearing cover/steering shaft (12)	after removing O-ring (16), screw into the retaining device 140 589 04 31 00 or 210 589 05 31 00 (number 9).
Teflon ring (81) and O-ring (80)	check in steering gear housing, replace, if necessary (number 10).

Inner slotted round nut (23), bearing insert (17), needle bearing (82) and washer (22) ..... remove (numbers 11–13).

Pronged wrench	140 589 03 07 00
Pin wrench	140 589 04 07 00

When installing, set friction torque of steering shaft in steering shaft/bearing cover, tightening torque of inner slotted round nut 280–320 Nm (numbers 17–20).

Radial seal ring (14) ..... remove, press in, replace, use mandrel 140 589 07 15 00 (numbers 14 and 15).

Bearing insert (17) and Teflon ring (20) ..... examine for signs of damage and wear, replace if necessary (number 16).

O-rings (40) ..... replace (number 29).

Special tool

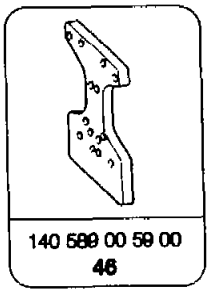
140 589 00 59 00
46

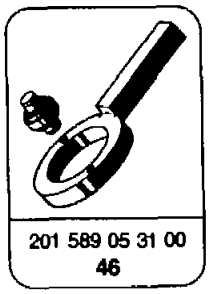
201 589 05 31 00
46

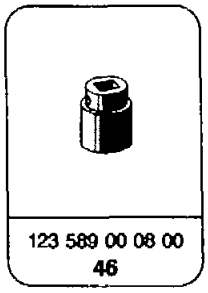
123 589 00 08 00
46

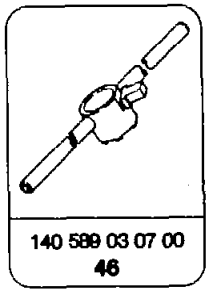
140 589 03 07 00
46

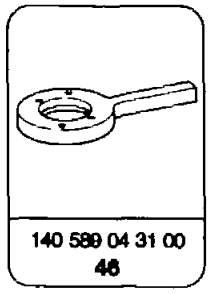
140 589 04 31 00
46

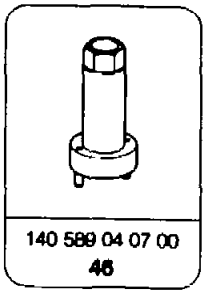
140 589 04 07 00
46

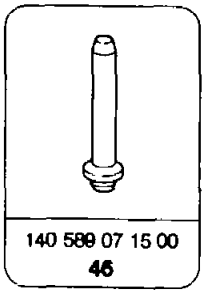
140 589 07 15 00
46

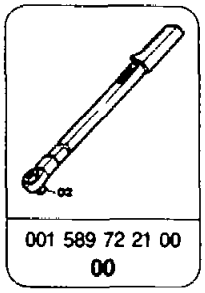
001 589 72 21 00
00

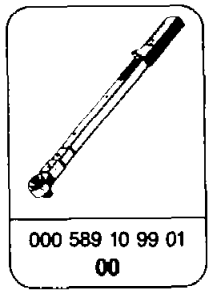
000 589 10 99 01
00

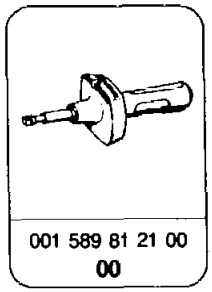
001 589 81 21 00
00

⚠

Pay attention to "Important notes regarding repair of steering gear" (Operation no. 46–0230).

Disassembling and assembling

1 Attach steering gear to assembly support 140 589 00 59 00 with two bolts and clamp in vise.

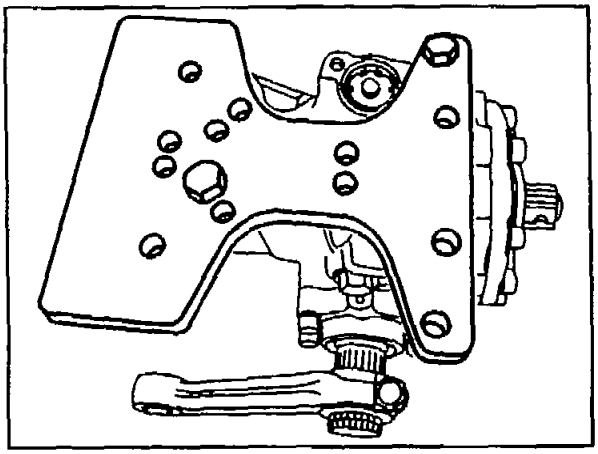

P46-5480-13

2 Unscrew self-locking hexagon socket bolts (41) for attaching steering shaft/bearing cover (12).

3 Rotate steering shaft (13) counter-clockwise until the steering shaft/bearing cover (12) is pressed approx. 10 mm out of the steering gear housing.

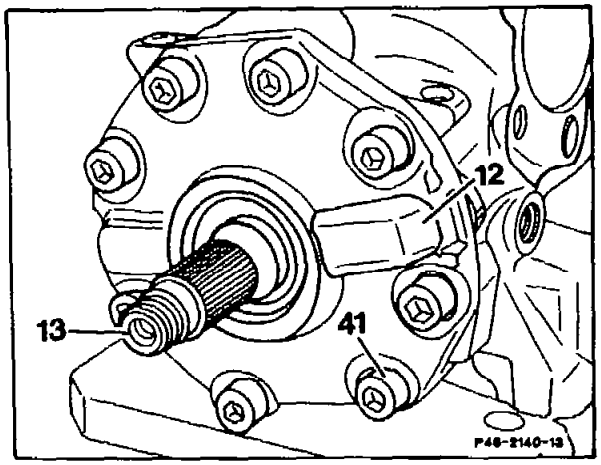

P46-2140-13

⚠

Do not rotate steering shaft too far otherwise the balls will drop out of the recirculating ball assembly.

4 Remove steering shaft/bearing cover together with steering shaft and power piston from the steering gear housing.

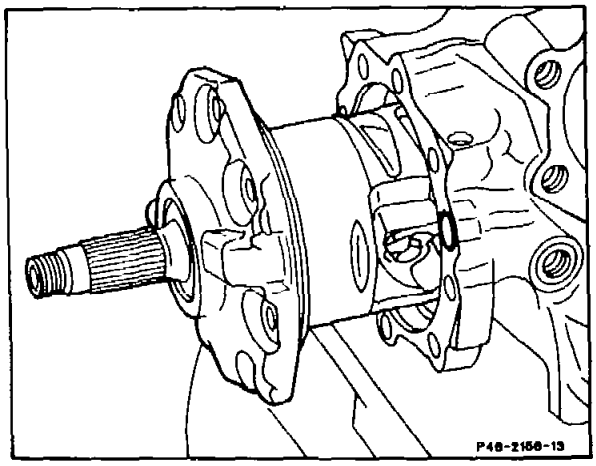

P46-2156-13

5 Carefully clamp power piston (11) with bearing cover/steering shaft and steering shaft in vise with aluminum protective jaws.

⚠
Ensure complete cleanliness.

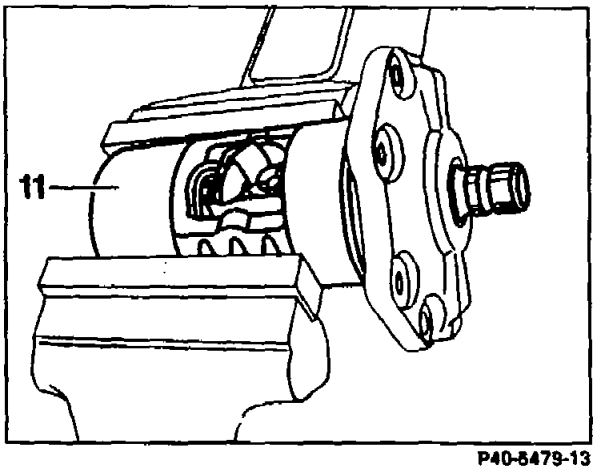

P40-5479-13

6 Measure friction torque of the recirculating ball assembly. When measuring friction torque of the steering nut to the steering shaft, use torque screwdriver 001 589 81 21 00 in combination with wrench insert 123 589 00 08 00. Whilst steadying the steering shaft/bearing cover (12) turn steering shaft anticlockwise and clockwise several times, read off and note friction value. The friction torque must be 5–50 Ncm.

⚠
Do not turn steering shaft too far to the left otherwise the balls will drop out of the recirculating ball assembly.
If any sticking or play is detected in the recirculating ball assembly when rotating, the steering gear should be replaced completely.

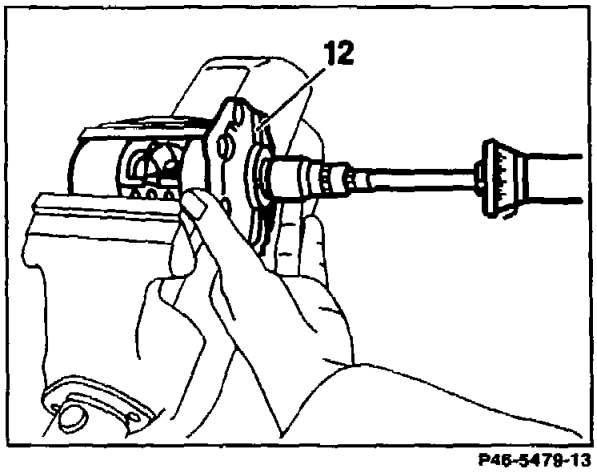

P46-5479-13

7 Bend up locking plate (38), unscrew hexagon bolts (39) and take off locking plate (38), retaining clip (37) and both ball guide halves (36) together with balls.

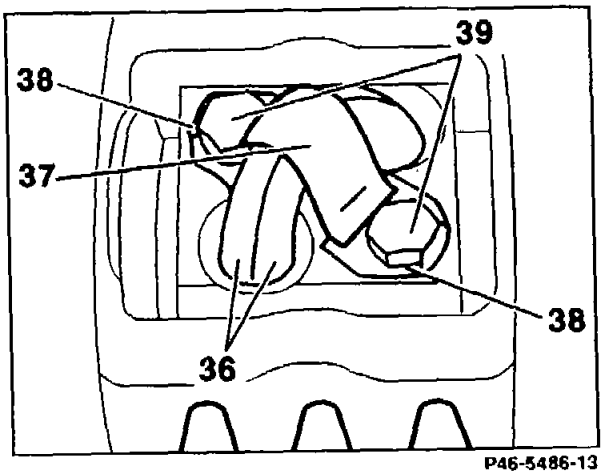

P46-5486-13

8 Unscrew steering shaft (13) out of the steering nut (25) and carefully remove the balls with a bar magnet or similar if required. Ensure that none of the total of 23 balls, or 24 (model 140) are lost.

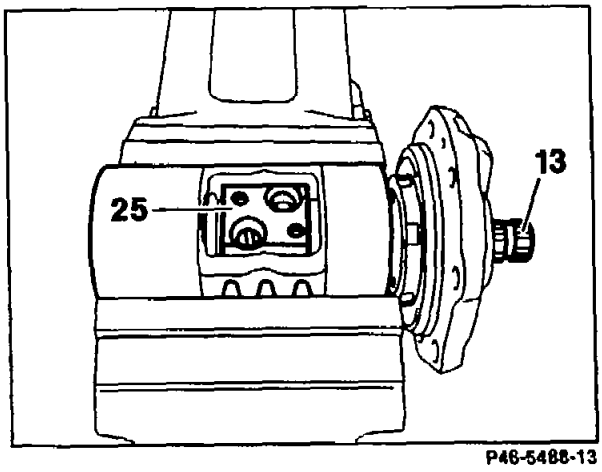

⚠

The balls are **not** available as a part.
The power piston together with steering nut (25) must not be disassembled. If scoring is detected on the power piston, indentations on steering shaft or sticking steering nut, the steering gear should be replaced.

9 Take O-ring (16) off the steering shaft/bearing cover. Insert steering shaft/bearing cover in the retaining device 140 589 04 31 00 or 201 589 05 31 00, and then tighten with two bolts.

Note
On steering gears fitted to models 124.034/036 and 140, remove gasket and check for damage, replace if necessary.

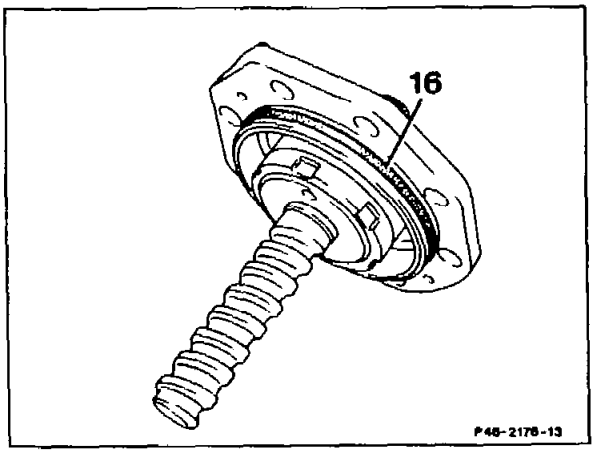

10 Examine Teflon ring (81) and O-ring (80) in the steering housing, replace, if necessary.

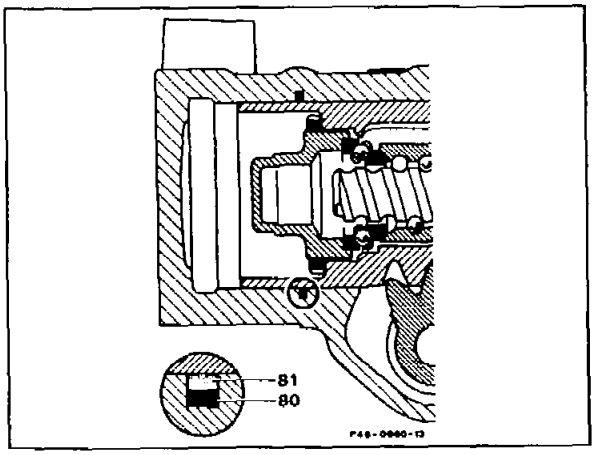

11 Unscrew inner slotted round nut (23) from the bearing insert with the pronged wrench 140 589 03 07 00.

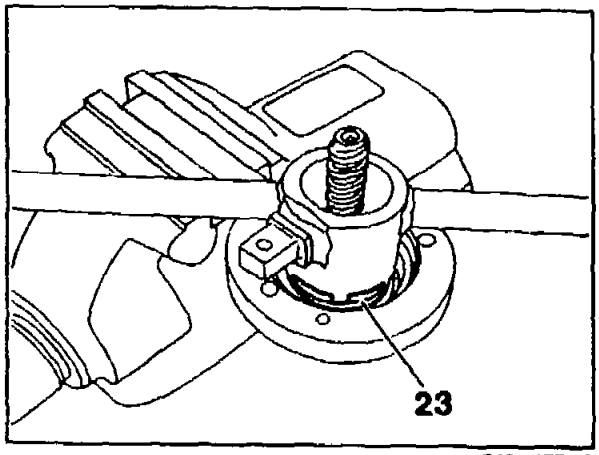

P46-6477-13

12 Unscrew bearing insert (17) from the steering shaft/bearing cover (12) with the pin wrench 140 589 04 07 00.

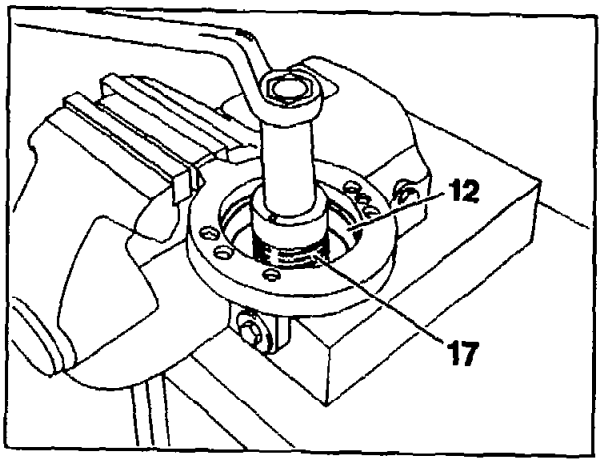

P46-6485-13

13 Withdraw steering shaft (13) from the steering shaft/bearing cover; take the needle bearings (82) and the disc (22) off the steering shaft. Examine steering shaft, balls, needle bearings and bearing surfaces for signs of damage and wear.

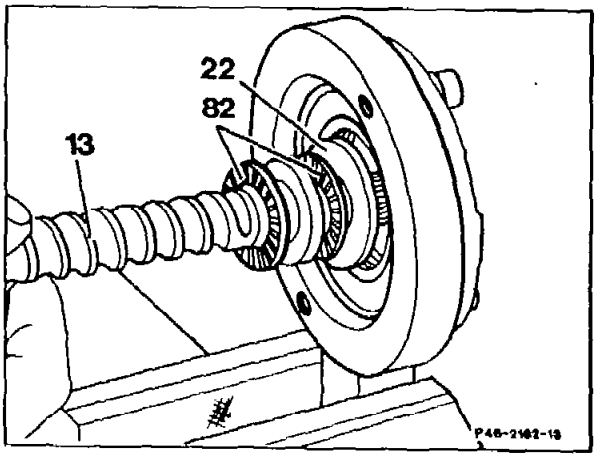

14 Press radial seal ring out of the steering shaft/bearing cover (12) with a suitable mandrel.

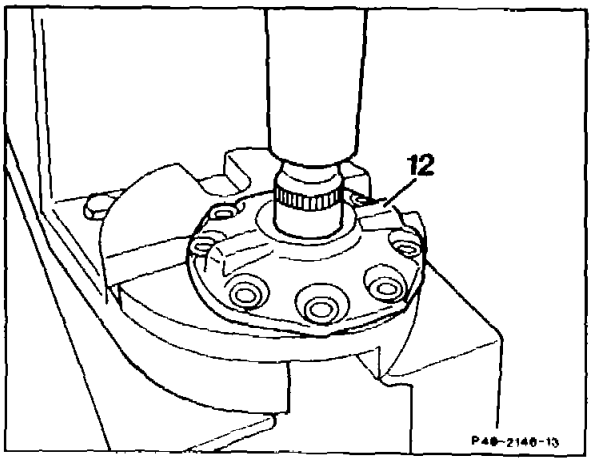

15 Press new radial seal ring (14) into the steering shaft/bearing cover (12) as far as the collar with the mandrel (035) 140 589 07 15 00. Coat the sealing lip with multi-purpose grease.

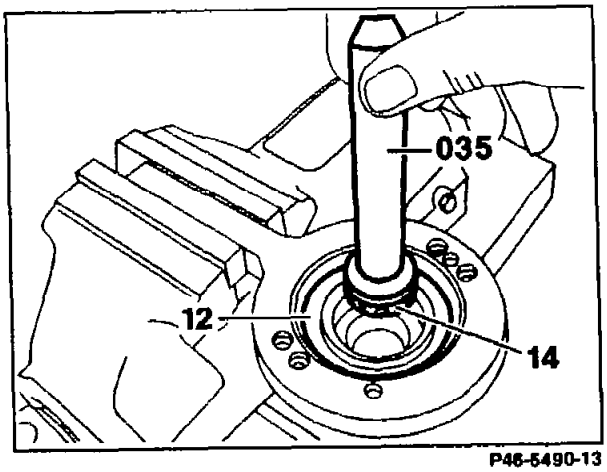

16 Check Teflon ring (20) and replace if necessary. Check needle sleeve (18) for wear. If the needle sleeve is damaged, replace bearing insert (17) complete.

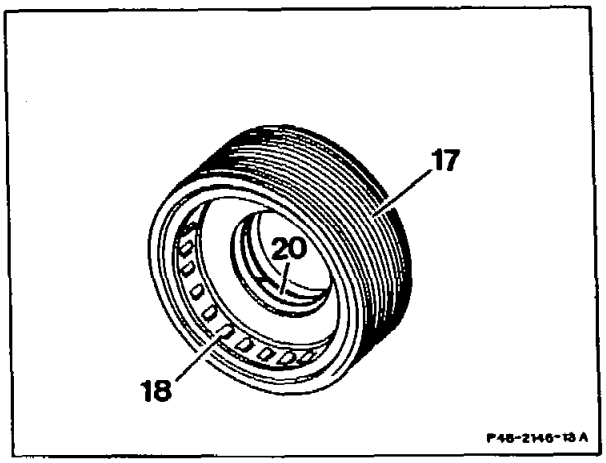

17 Push washer (22) and steering shaft (13) with the two needle bearings (82) into the bearing cover/steering shaft.

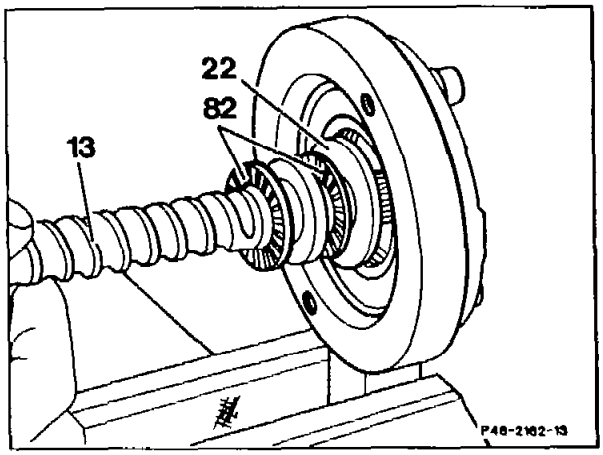

18 Screw bearing insert (17) into the bearing cover/steering shaft (12) and tighten slightly. Screw on inner slotted round nut (23) onto the bearing insert (17).

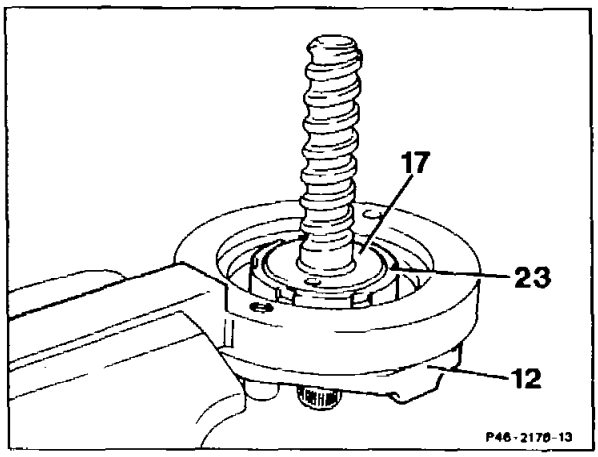

19 Measure friction torque of steering shaft in bearing cover/steering shaft.
The friction torque should be 10–15 Ncm, measured with the torque screwdriver 001 589 81 21 00 in conjunction with the socket wrench insert 123 589 00 08 00.

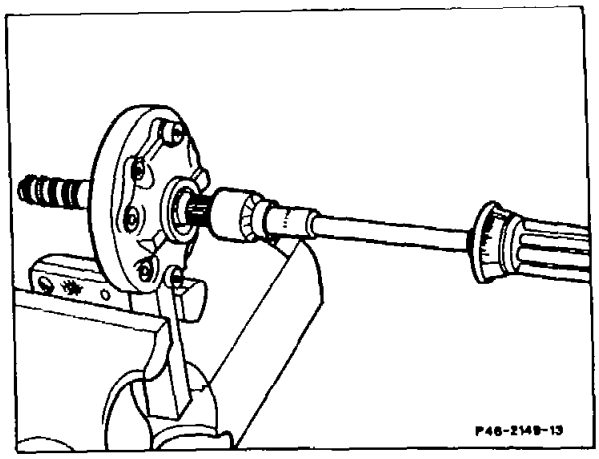

20 Tighten bearing insert with the pin wrench 140 589 04 07 00 until a friction torque of approx. 20 Ncm exists. Tighten inner slotted round nut (23) to 280–320 Ncm with claw wrench 140 589 03 07 00, whilst steadying the pin wrench. Re-check friction torque.

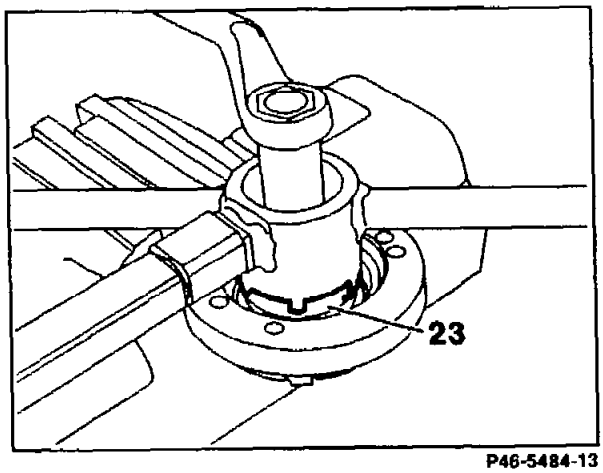

21 Remove steering shaft/bearing cover together with steering shaft from the assembly support and insert new O-ring (16).

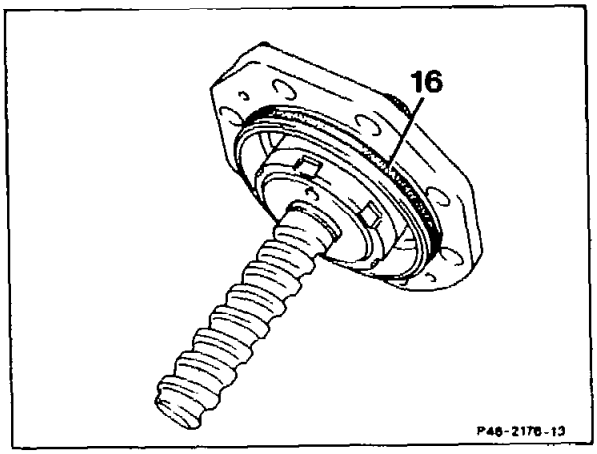

Note
On steering gears fitted to models 124.034/036 and 140, a sealing washer with integrated O-ring (arrow) is used in place of the O-ring.

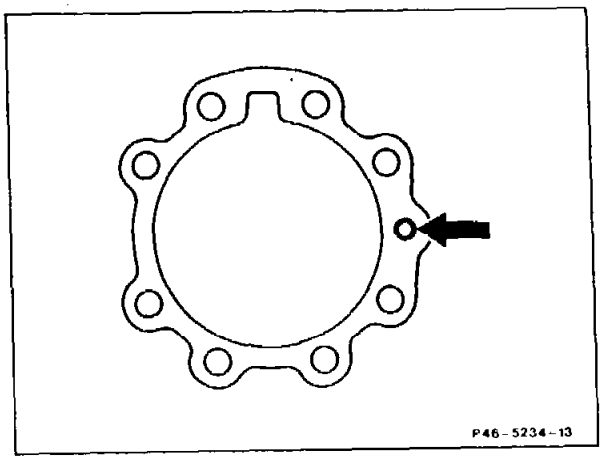

22 Carefully clamp power piston (11) in vise with aluminum protective jaws.

⚠
Ensure complete cleanliness.

23 Introduce steering shaft (13) together with steering shaft/bearing cover into the steering nut far enough for a ball track to be fully visible through the first hole in the steering nut (25).

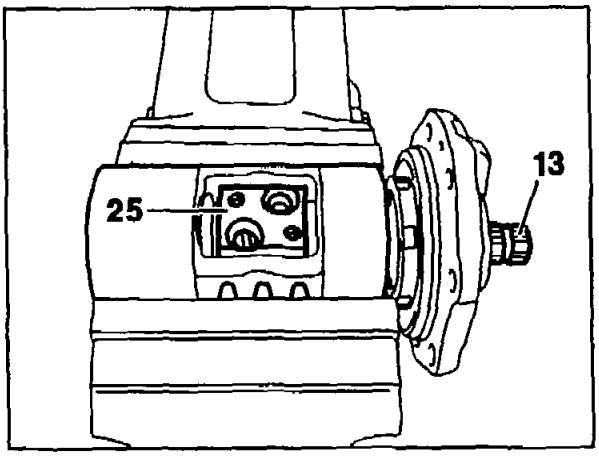

P46-5488-13

24 Insert 17 balls into the ball recirculating assembly while slowly turning the steering shaft clockwise.

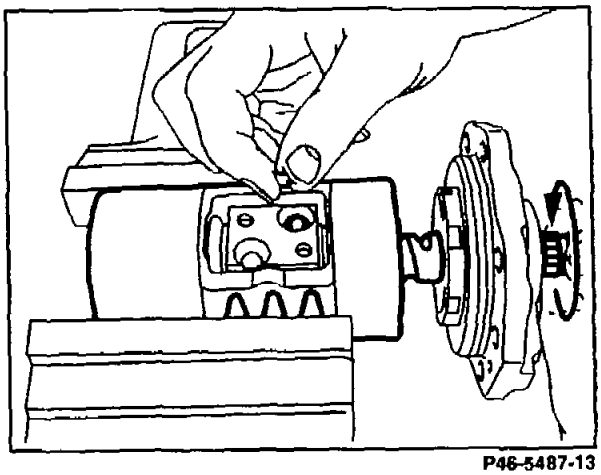
P46-5487-13

25 Pack one ball guide half (36) with grease *and insert the remaining 6 balls or 7 (model* 140). Place both ball guide halves on top of each other and close the openings with grease.

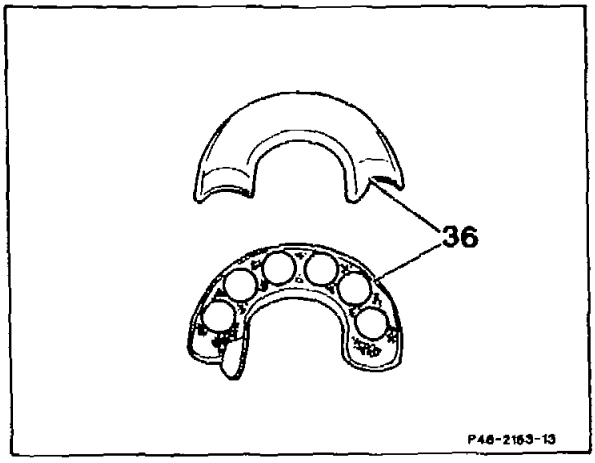

P46-2153-13

26 Insert ball guide halves (36) into the steering nut.

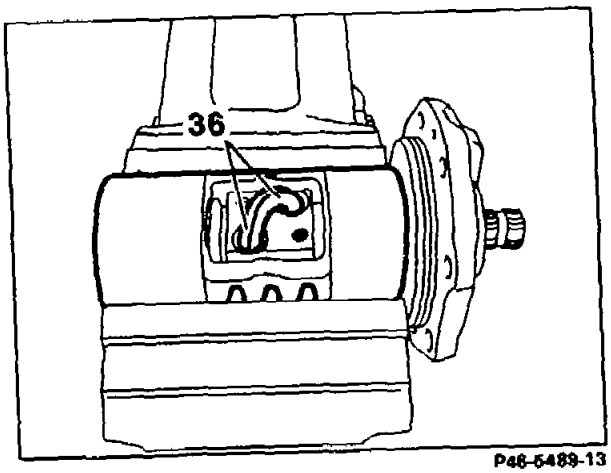

P46-5489-13

27 Fit fixing clip (37) and new locking plates (38) onto the steering nut. Screw in hexagon bolts (39) and tighten to 12–15 Nm.

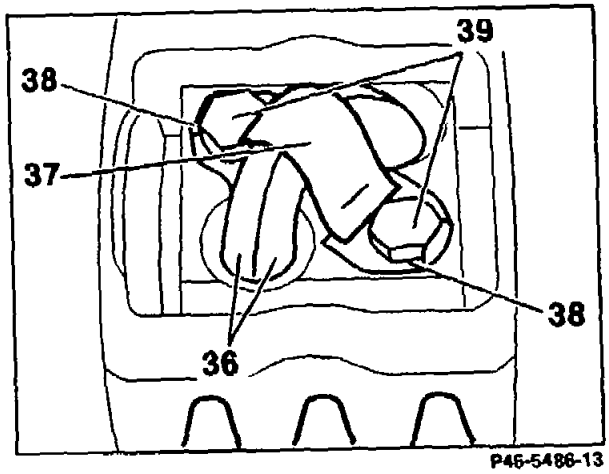

P45-5486-13

28 Measure friction torque of ball circuit. Use torque screwdriver 001 589 81 21 00 and socket wrench insert 123 589 00 08 00 to measure the friction torque of the steering nut to steering shaft. Whilst steadying the steering shaft/bearing cover (12) turn steering shaft anticlockwise and clockwise several times and read off friction value. The friction torque of approximately *5–50 Ncm should not differ from the value* established in the initial measurement (number 6).

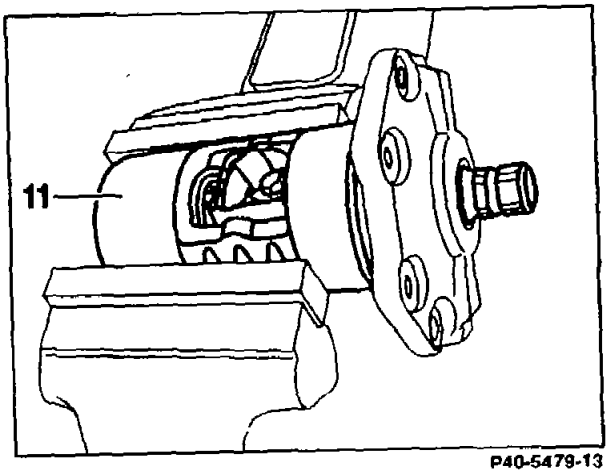

P40-5479-13

⚠

Do not turn steering shaft too far anticlockwise, otherwise the balls will fall out of the ball circuit. If, whilst turning the steering, a high spot or play in the ball circuit is found, the complete steering gear must be replaced.

29 Insert new O-rings (40) for the steering shaft/bearing cover into the steering gear housing.

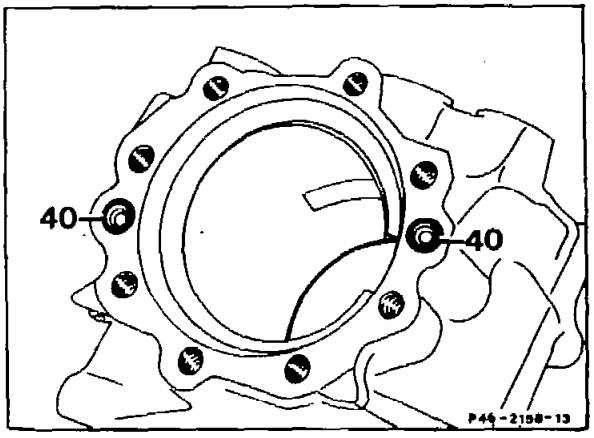

30 For models with steering gears as of 3/89, a restrictor is fitted in the top lube oil passage. Before installing the steering shaft/bearing cover, ensure the passage is clear.

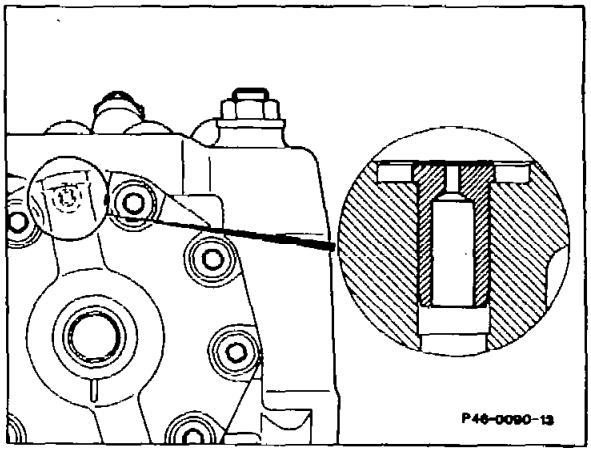

31 Carefully insert power piston complete with steering shaft, steering nut and steering shaft/ bearing cover into the control valve or into the steering gear housing. Check that the O-rings are correctly seated.

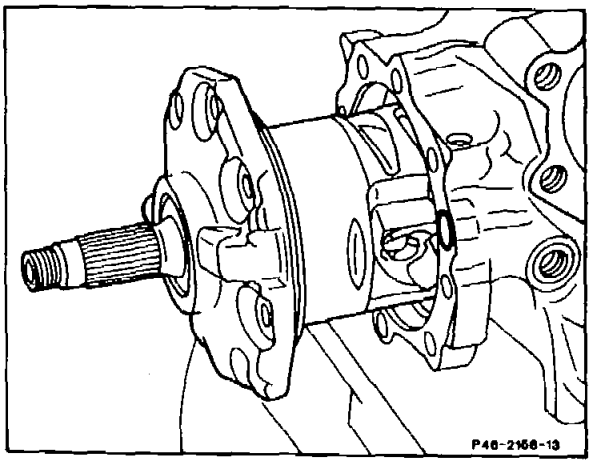

32 Screw in new self-locking hexagon socket bolts (41) and tighten to 25–30 Nm.

33 Install steering shaft/bearing cover (12) together with pitman arm shaft (46–0232).

34 Install play compensator (46–0235).

35 Adjust total friction torque of steering gear (46–0120).

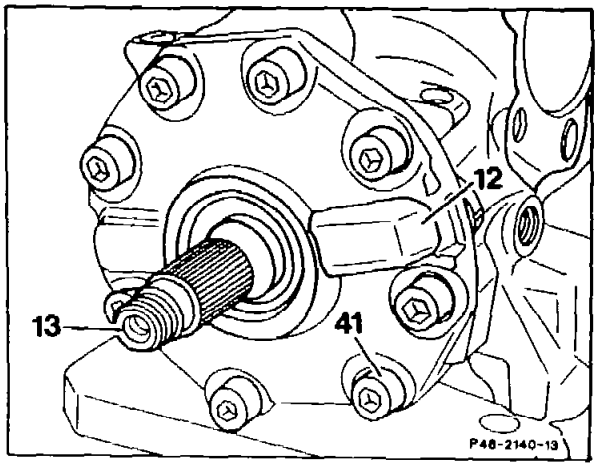

46–0238 Removing, installing and checking control valve

Preceding work:
Removing and installing steering gear (46–3400).
Removing and installing bearing cover with pitman arm shaft (46–0232).
Removing and installing play compensator (46–0235).
Removing and installing steering shaft/bearing cover (46–0236)

A. Conventional control valve

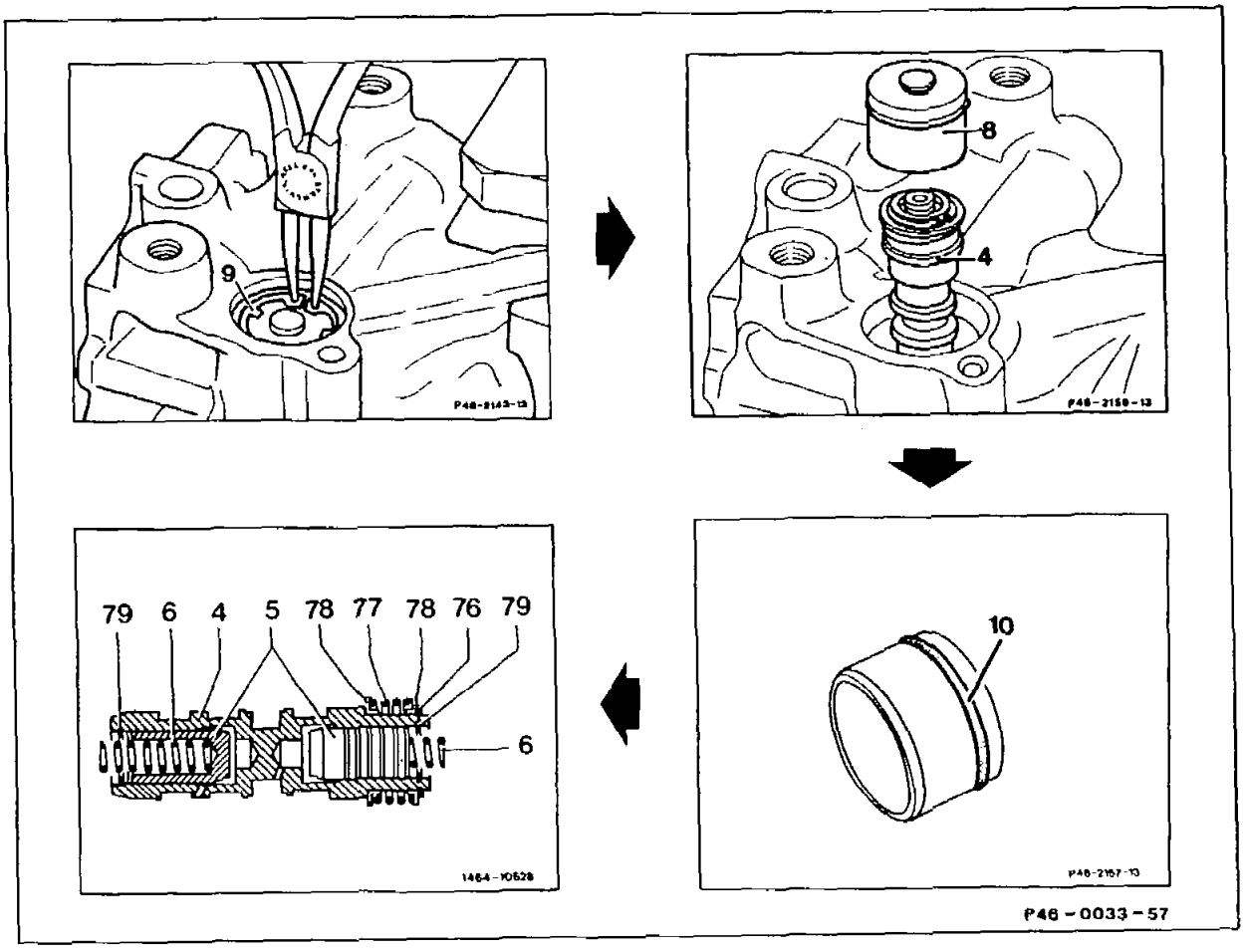

Locking ring (9)	withdraw from steering gear housing. When inserting locking ring, ensure that the lugs press onto the end cover and the locking ring is properly seated in the groove.

End cover (8)	withdraw from steering gear housing, replace O-ring (10). When inserting end cover, ensure that the hole in the end cover is facing upwards in the installed position.
Control valve (4)	withdraw from the steering gear housing. Ensure that the springs (6) do not drop out of the reaction piston. Before inserting control valve (4) in the steering gear housing, insert springs (6) with grease into the reaction pistons.
	Note The control valve has been fitted to the steering gear by adopting the selection procedure. If the control valve does not move easily or sticks, or if there are signs of wear on the surface, the steering gear should be replaced.
Springs (6)	check. If a spring is fractured, the steering gear must be replaced. It is **not** possible to achieve uniform steering assistance with one replacement spring. The springs must remain allocated to the respective side when removing and installing the reaction piston.
Reaction piston (5)	check that it operates freely in control valve (4). The compensating washers of the two reaction pistons must not be mixed up.
	⚠ Do not disassemble reaction piston (5).
Locking ring (79)	ensure it is correctly seated.
Spring (77)	check.

B. Control valve on parameter steering

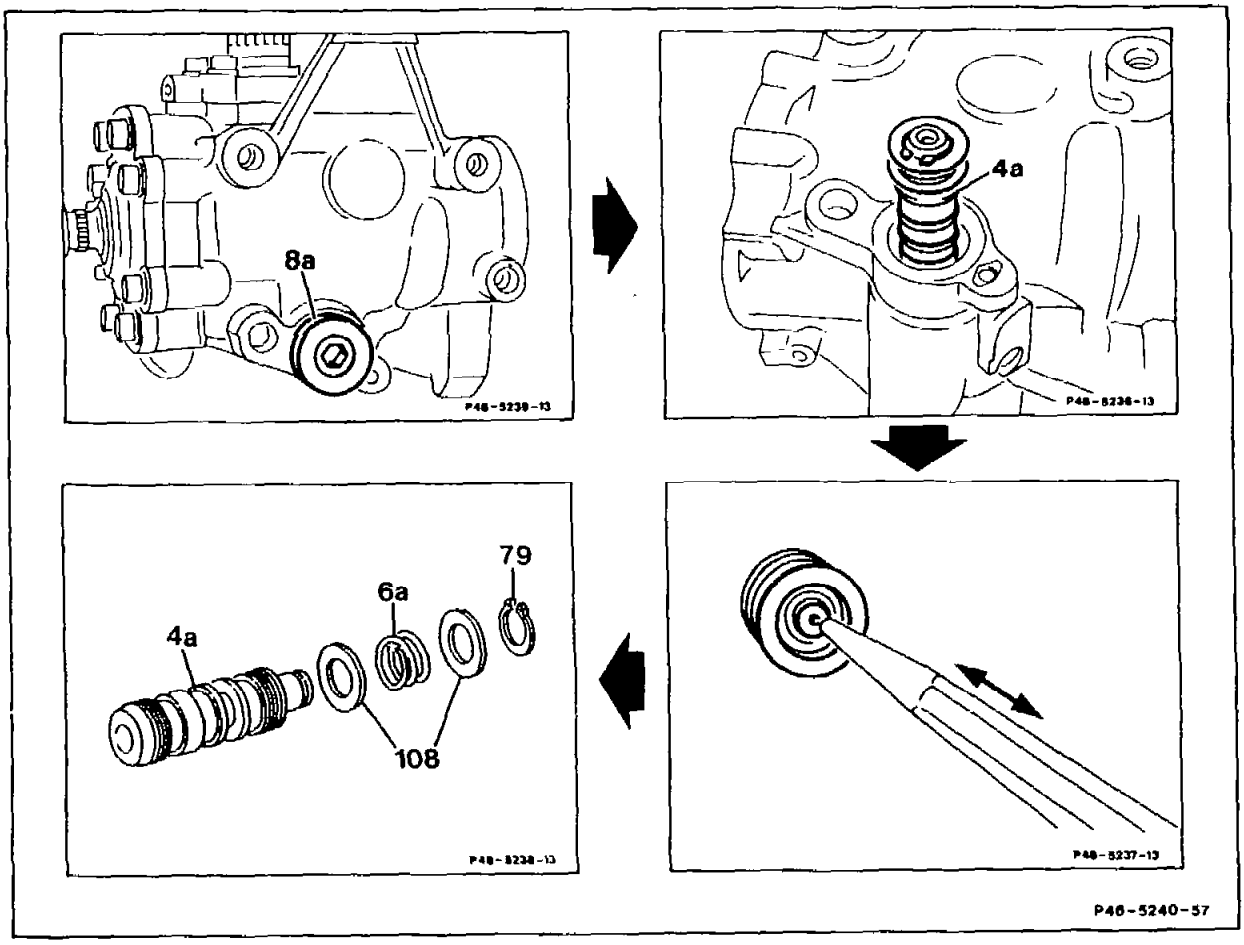

Screw plug (8a)	unscrew, screw in, 100 Nm, replace seal.
Control valve (4a)	remove, install at steering gear.

Note

The control valve has been fitted to the steering gear by adapting the selection procedure.
If the control valve does not move easily or sticks or if there are signs of wear on the surface, the steering gear should be replaced.

Springs in reaction piston	check. Press these against the spring force using a mandrel and check whether the reaction piston is pressed back properly into the final position. ⚠ If the reaction piston does not move back properly or the spring is broken, the steering gear must be replaced since even steering assistance is **not** possible with a replacement spring.
Locking ring (79)	remove, check, install, replace if required.
Thrust washers (108)	remove, check, install, replace if required.
Basic pressure spring (6a)	check for coil fracture.

46–0715 Filling and bleeding the power steering pump/tandem pump

Type of oil

Steering gear oil (power system)	refer to Specifications for Service Products, Sheet 236.3
Hydraulic oil on level control, ABS, ASD, 4MATIC (high-pressure system)	refer to Specifications for Service Products, Sheet 343.

Capacities

Model	Capacity
124, 129, 201, 202	approx. 1.0 liter
140	approx. 1.4 liter

1. Version (model 201 up to 09/84)

When engine is cold (room temperature approx. 20°C) oil level 6–8 mm below marking (arrow). When oil is at operating temperature (approx. 80°C) correct oil level up to the embossed or cast-in marking (arrow).

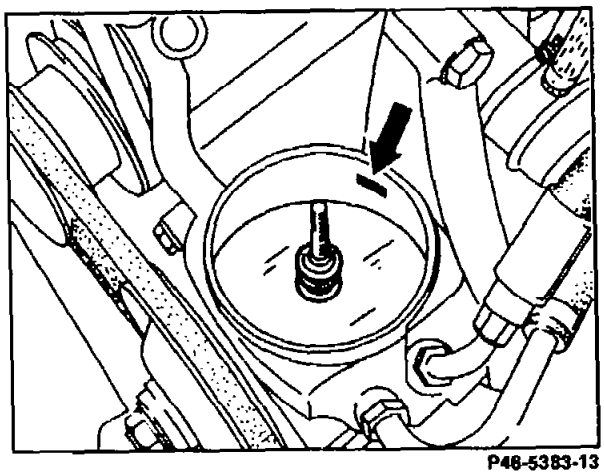

P46-5383-13

2. Version 10/84 to 01/91

The reservoir is filled correctly when the oil (20–50°C) is between the min. and max. markings, 28–36 mm below the edge of the reservoir.

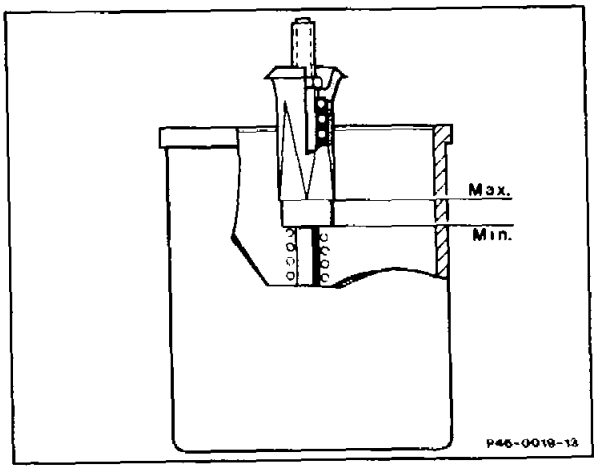

3. Version as of 02/91

When engine is cold (room temperature 20°C) oil level at the maximum marking of the oil level display (30c) of the power steering/tandem pump (30).

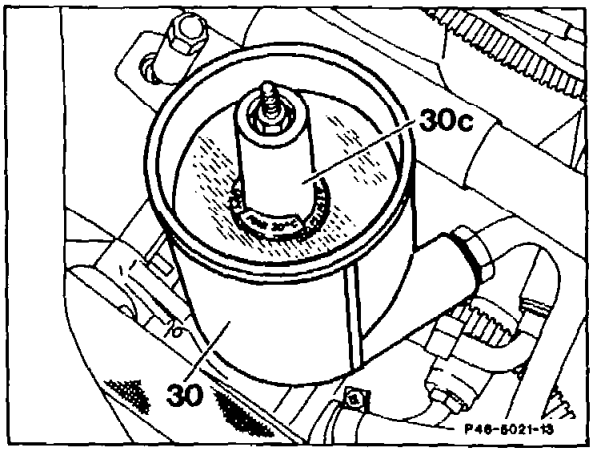

Engine 120

Remove plastic cover (30e).

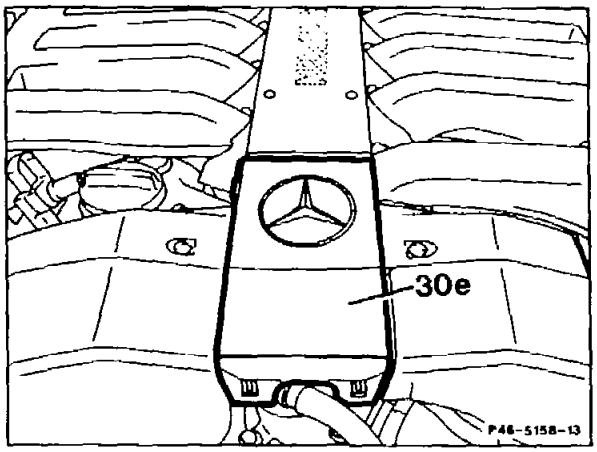

The oil dipstick with "min" and "max" marking for the oil level check is on the cap of the expansion reservoir.

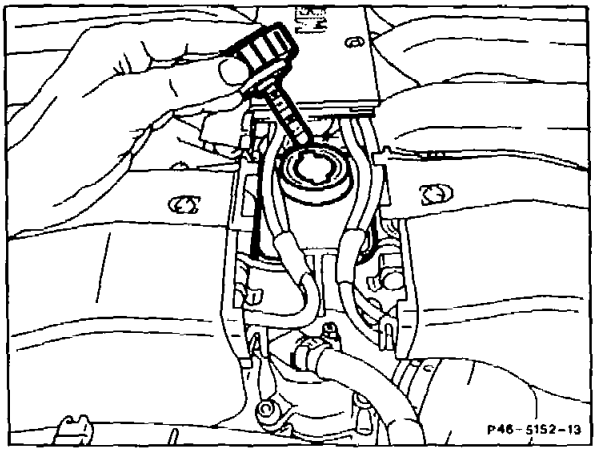

4. Filling/bleeding

Before starting the engine, fill with specified steering gear oil to approx. 10 mm below the upper edge of the reservoir.
Start engine, allow to run for approx. 1 s. Switch off engine and immediately replenish extracted oil. The power steering pump must **not** ingest any air. Turn steering several times anticlockwise and clockwise towards full lock so that the system can bleed itself. On vehicles with tandem pump (level control, ADS, ASD or 4MATIC) bleed the respective systems separately.

5. Oil level check

Correct oil level depending on the version.

6. Leak testing

A power steering/tandem pump must only be replaced if oil leakage (pronounced formation of droplets) has been established and the oil level is below the minimum marking.
A slight oil film on the radial seal ring or on the housing joint face is due to the system.

a) Leakage at the pipe connections:
Retighten high pressure hose. If this is not successful, the connection nipple must be checked for damage. If necessary, replace high-pressure hose.

b) Formation of droplets on the underside of the power steering pump:
The cause of this is often an overfilled reservoir.

Note

Before the cover is screwed onto the reservoir, clean the sealing surface of the cover and its support surface on the reservoir.

46–0730 Disassembling and assembling power steering pump/tandem pump

Preceding work:
Removing and installing power steering pump/tandem pump (46–4000).

Operation no. of operation texts and work units or standard texts and flat rates
46–4079

A. Power steering pump

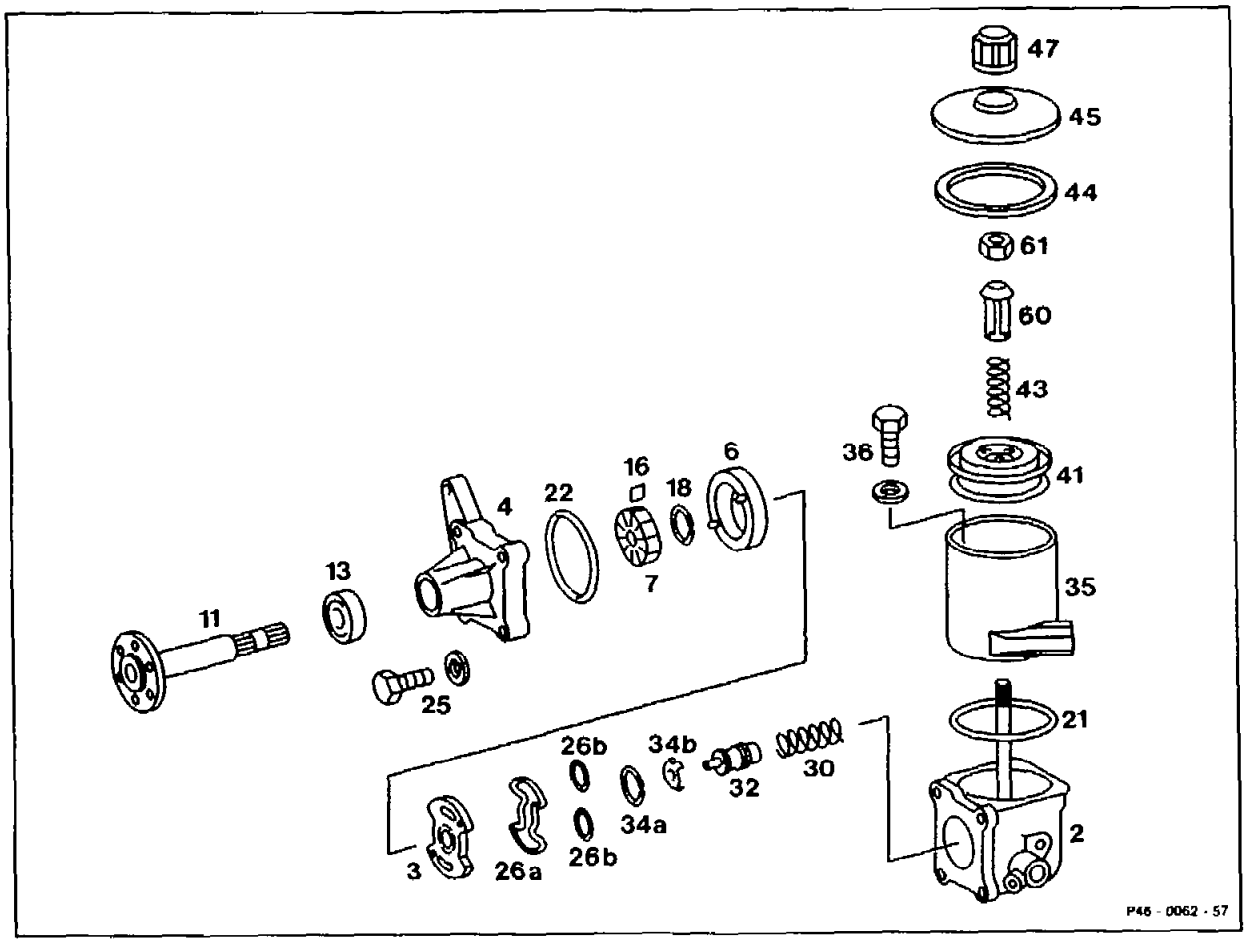

Breather cap (47) and end cover (45)	remove, fit on (numbers 1 and 25).
Self-locking nut (61)	unscrew, screw on, replace (numbers 2 and 25).
Plastic sleeve (60), spring (43) and filter set (41)	take off, insert (numbers 2 and 25).
Vickers/LUK power steering pumps	unscrew, screw on fluid reservoir (35). 8 Nm. Replace O-ring (21) (numbers 3 and 24).

Bolts (25)	unscrew, screw in, take off bearing flange (4). Tightening torque 30–35 Nm (4 and 23).
Pressure plate (3) and cam insert (6)	take off (number 5). When assembling, insert cam insert with direction of rotation arrow facing up and pressure plate with ground side facing cam insert (6), into the straight pins (numbers 20 and 22).
Locking ring (18)	remove, install and replace (numbers 6 and 19).
Rotor (7) with vane (16)	remove (7) (numbers 7, 18 and 21).
Drive shaft (11)	remove, insert (numbers 8 and 18).
Radial seal ring (13)	remove and install, replace. Use suitable fitting mandrel (numbers 9 and 17).
O-ring (22, 26a, 26b)	replace.
Locking ring (34a or 34b)	remove, install. Ensure that the flow control valve (32) and the housing bore are not damaged (numbers 10 and 16).
Flow control valve (32) and compression spring (30)	remove, install (numbers 11, 14 and 15).
Components	check for signs of wear (numbers 12–13).

Note

When repairing the power steering pump, always use the repair kit of the respective manufacturer.
Scrupulous cleanliness is essential when performing any work on the power steering pump.

The work should be performed, wherever possible, on a plastic base. Chamois cloths are particularly suitable for this kind of work.
A strict standard should be applied when examining steering parts. Always replace the part in question in cases of doubt.

Disassembly

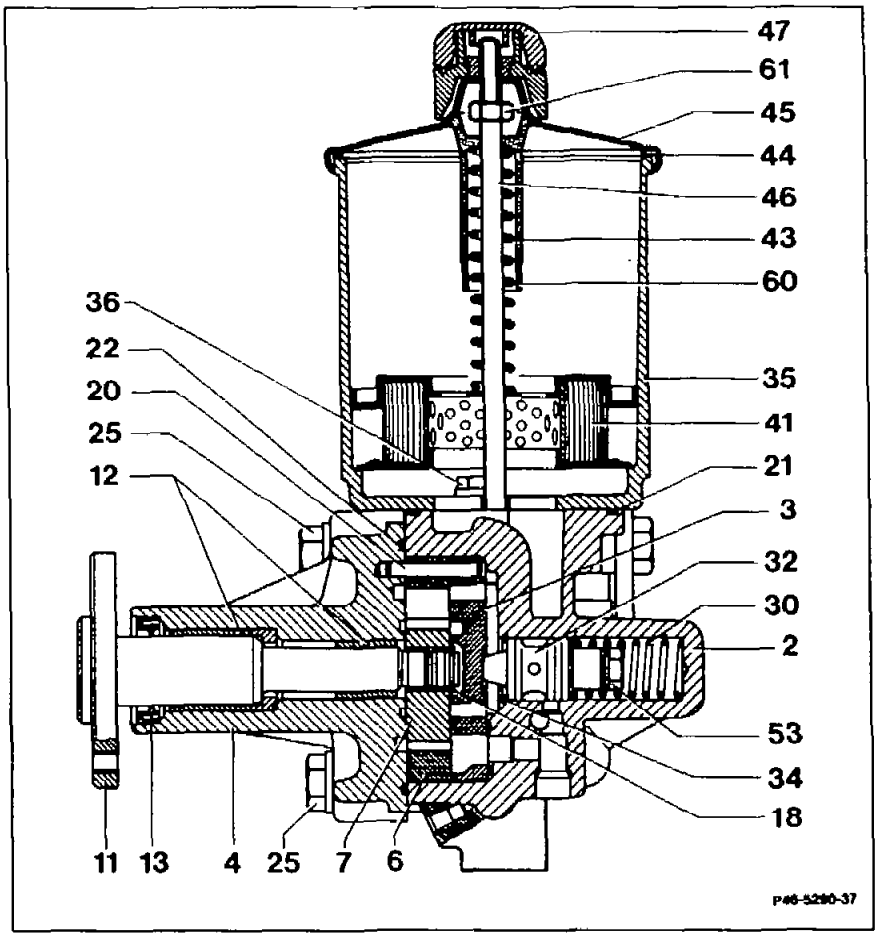

1 Unscrew breather cap (47), take off end cover (45).

2 Unscrew self-locking nut (61) downwards from the stud bolt, take off plastic sleeve (60), spring (43) and filter set (41).

3 On the Vickers/LUK power steering pump, the fluid reservoir (35) can be removed. Replace O-ring.
On the ZF power steering pump, the fluid reservoir is cast on to the pump housing (2).

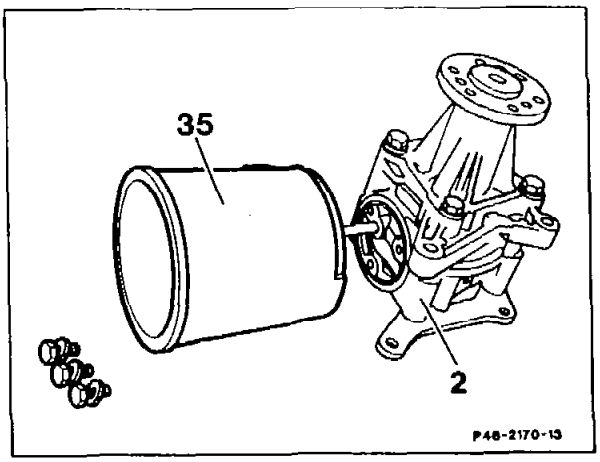

4 Unscrew bolts (25) and take off the bearing flange (4). Examine ground face of bearing flange (4) for signs of damage.

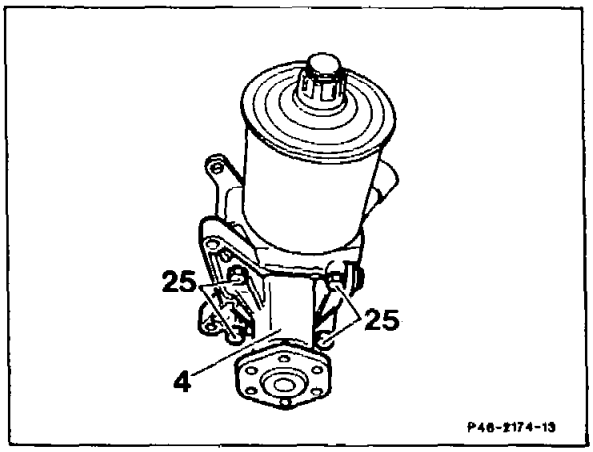

5 Take off pressure plate (3) and cam insert (6).
Examine ground face of pressure plate as well as sliding face of vanes on cam insert (6) for signs of scoring and wear.
There must not be any perceptible scoring present on the sliding face of the cam insert.

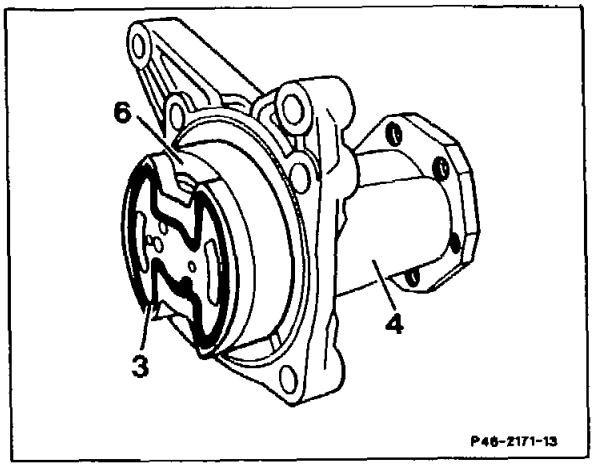

6 Take locking ring (18) off the drive shaft (11). Replace locking ring.

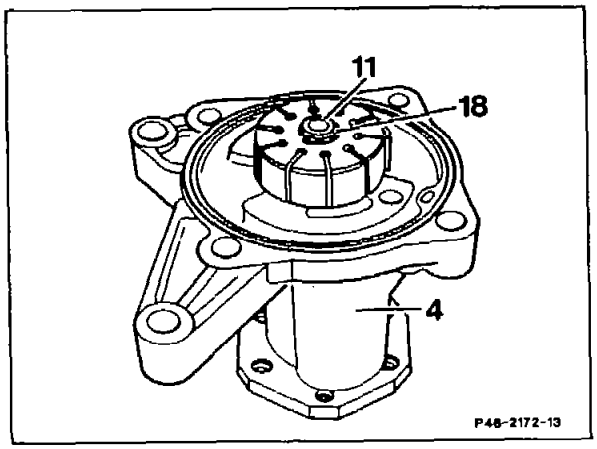

7 Detach rotor (7) with a plastic-headed hammer from the drive shaft (11) and take off together with the vanes (10 vanes). Examine the vanes (16) in the grooves of the rotor (7); they must slide easily in the rotor.
Examine sliding face of vanes at cam insert (6) for signs of wear. If necessary, repair power steering pump by using the "Pump operation" repair kit.

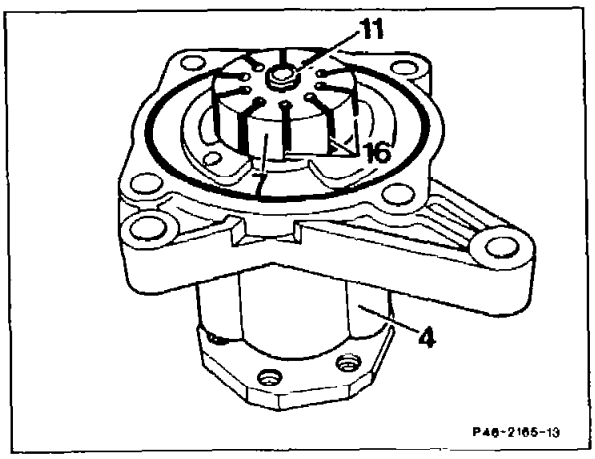

8 Remove drive shaft (11) from the bearing flange (4).
Examine drive shaft (11) and bearing bushes for signs of wear.

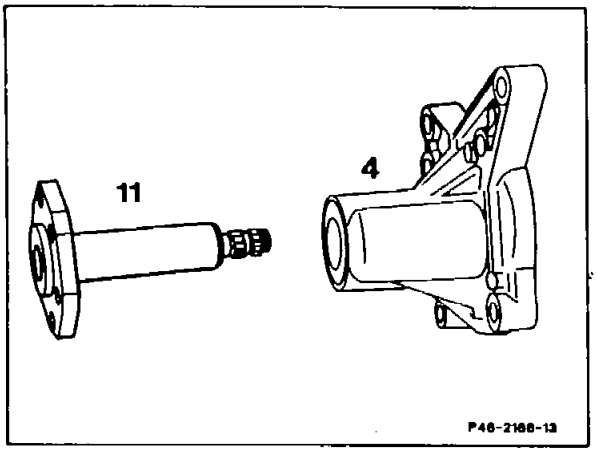

9 Use a screwdriver to press radial seal ring (13) out of the bearing flange (4).

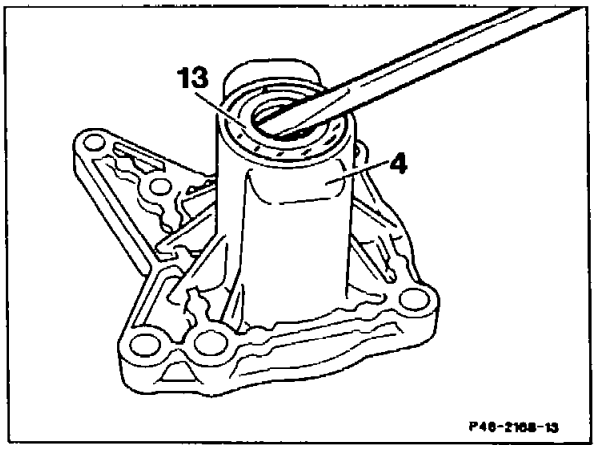

10 Remove locking ring (34a or 34b).

⚠

When removing locking ring, ensure that the housing bore is not damaged.

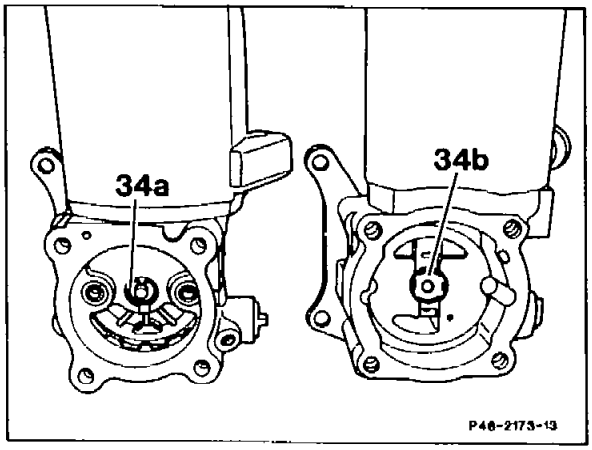

34a Vickers/LUK pump
34b ZF pump

11 Remove flow control valve (32) and compression spring (30) from the pump housing (2).

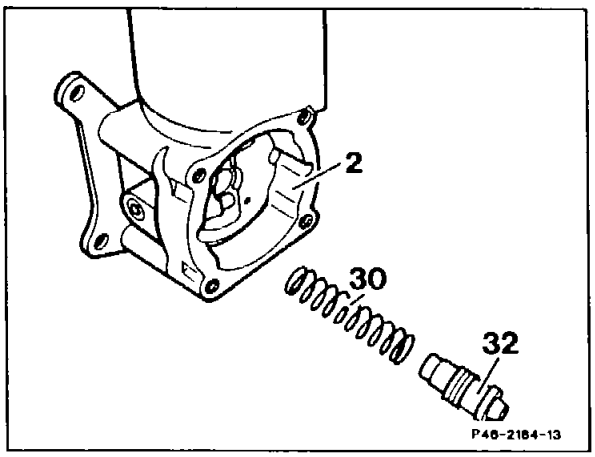

12 Clamp flow control valve (32) in a vise at the part which is not ground, and unscrew valve screw (53) of the overpressure valve.
Remove sealing cone (51) and compression spring (50).
Examine the ground faces of the flow control valve (32) and the bore in the pump housing for signs of wear and damage. If scoring is detected on the sliding faces, **the power steering pump must be replaced**.

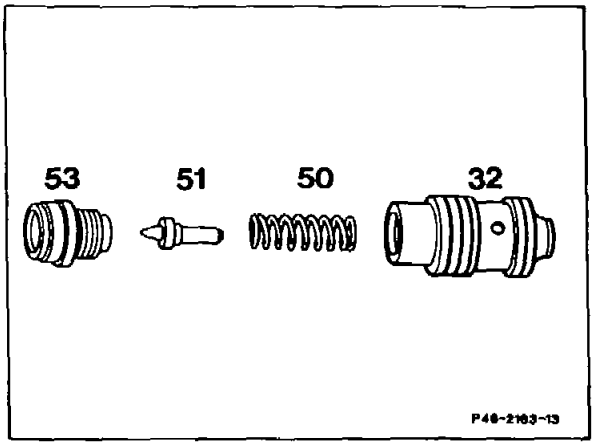

13 Check both sealing cones (high-pressure expansion hose, return pipe connection).
Replace misshapen sealing cones. This is done by cutting a thread with M7 or M10 a few thread turns deep into the sealing cone. Withdraw the sealing cone from the housing with an M7 or M10 bolt.
Fit new sealing cone into the housing and press into the housing by screwing in the high-pressure expansion hose or the return pipe.

Assembly

Note
Before assembling, moisten all parts with oil.
Replace all O-rings.
If fitting a new flow control valve, pay attention to the correct opening pressure of the overpressure valve.

14 Assemble flow control valve (32), by clamping flow control valve (32) in a vise at the part which is not ground, and tightening valve screw.

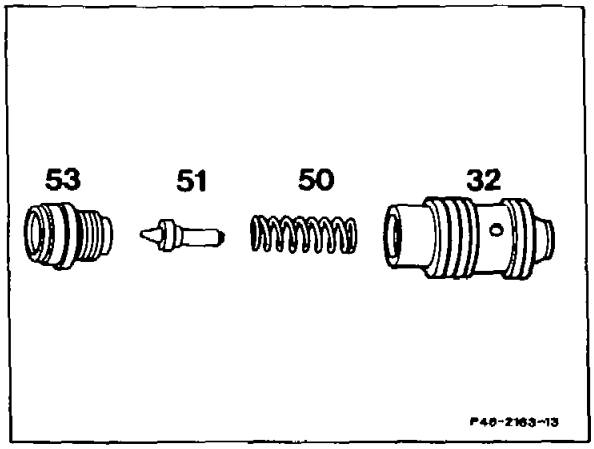

15 Insert compression spring (30) and flow control valve (32) into the pump housing (2).

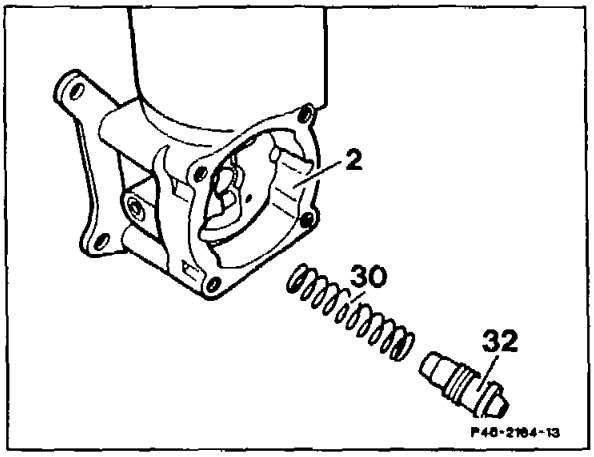

16 Install locking rings (34a and 34b). Ensure that the flow control valve and the bore in the pump housing are not damaged.

34a Vickers/LUK pump
34b ZF pump

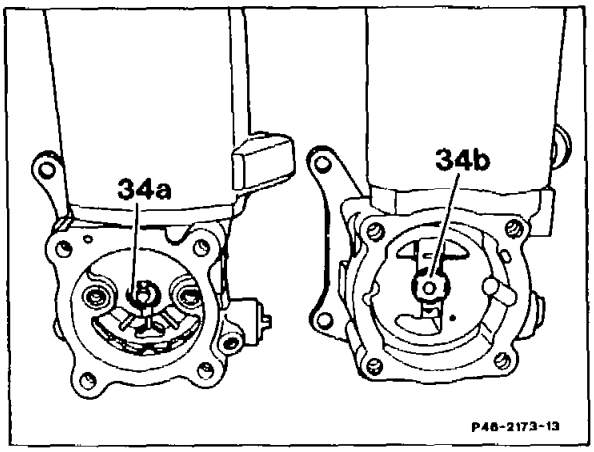

17 Press new radial seal ring into bearing flange with a suitable mandrel.

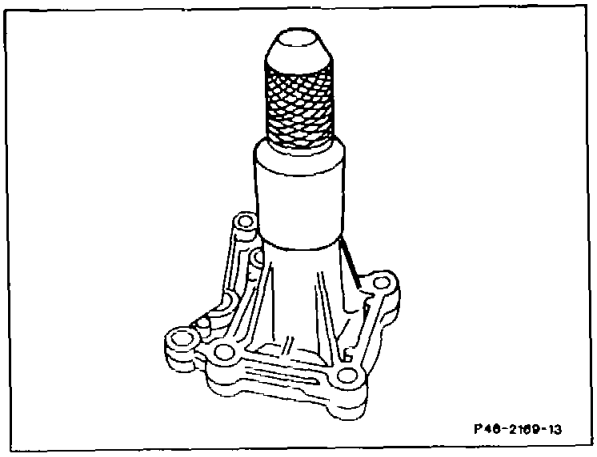

18 Insert drive shaft (11) into the bearing flange (4). After this, fit rotor (7) with the chamfer on the inner diameter facing the flange of the drive shaft.

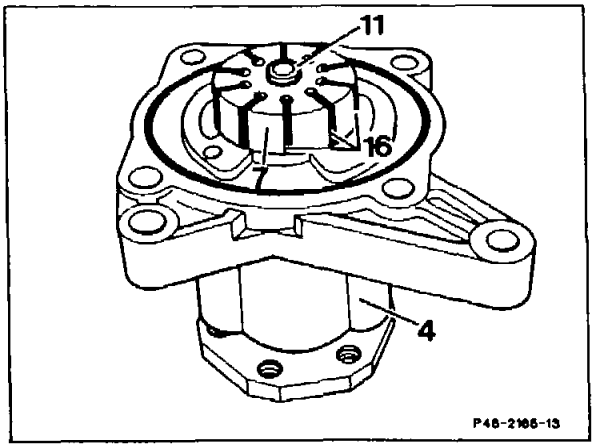

19 Fit new locking ring (18) onto the drive shaft. Ensure that the locking ring is correctly seated in the groove.

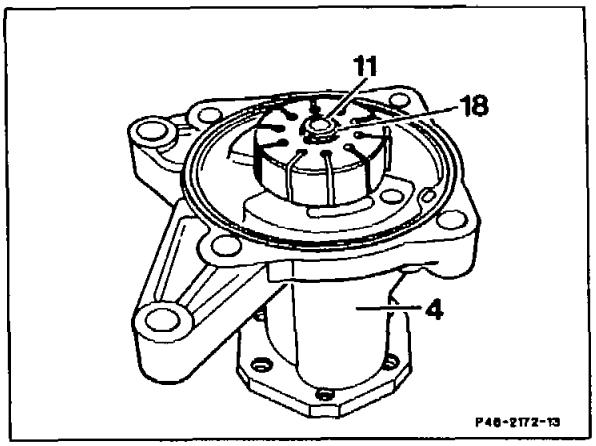

20 Insert the cam insert with the cast or stamped-in direction of rotation arrow (arrows) facing upwards into straight pins on the pump housing.

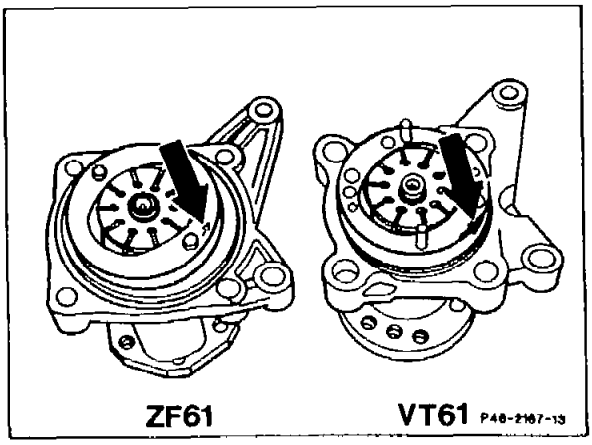

21 Insert vanes (10 off) into the rotor with the rounded, metallic glossy sides (arrow) facing the cam insert.

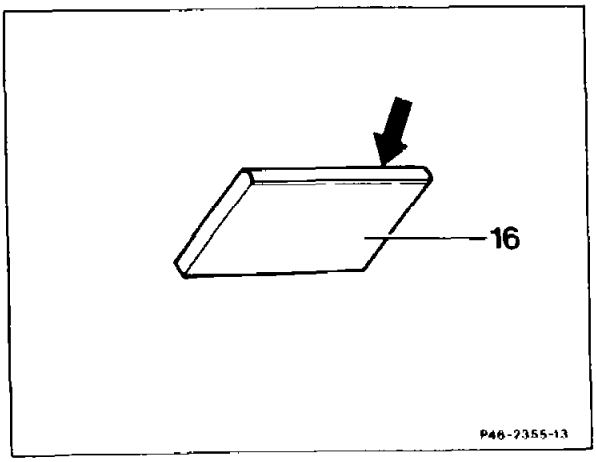

22 Fit on pressure plate (3) with ground face pointing toward cam insert (6).

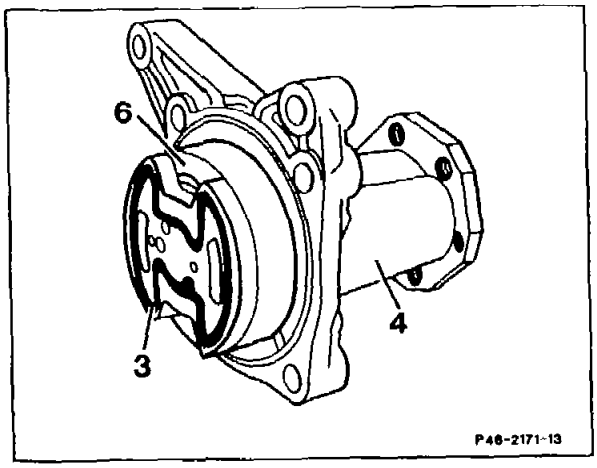

23 Insert O-rings in bearing flange, then insert bearing flange (4) in the pump housing and attach with the hexagon bolts (25).
Tightening torque 30–35 Nm.

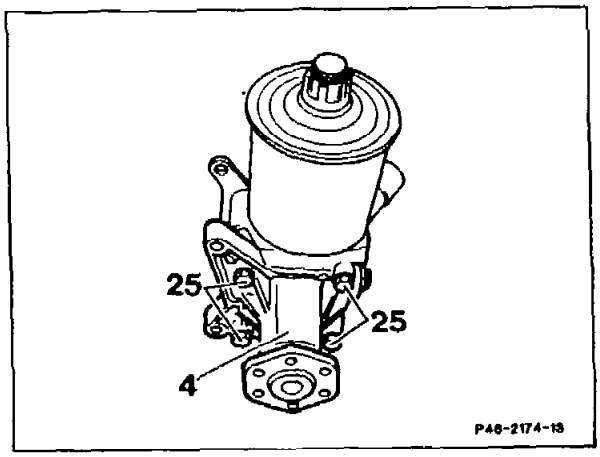

24 On the Vickers/LUK power steering pump, insert new O-ring, then fit on reservoir (35) and attach with the bolts.
Tightening torque 8 Nm.

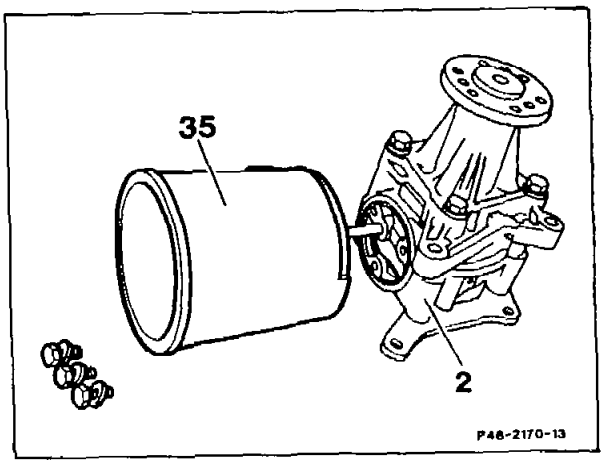

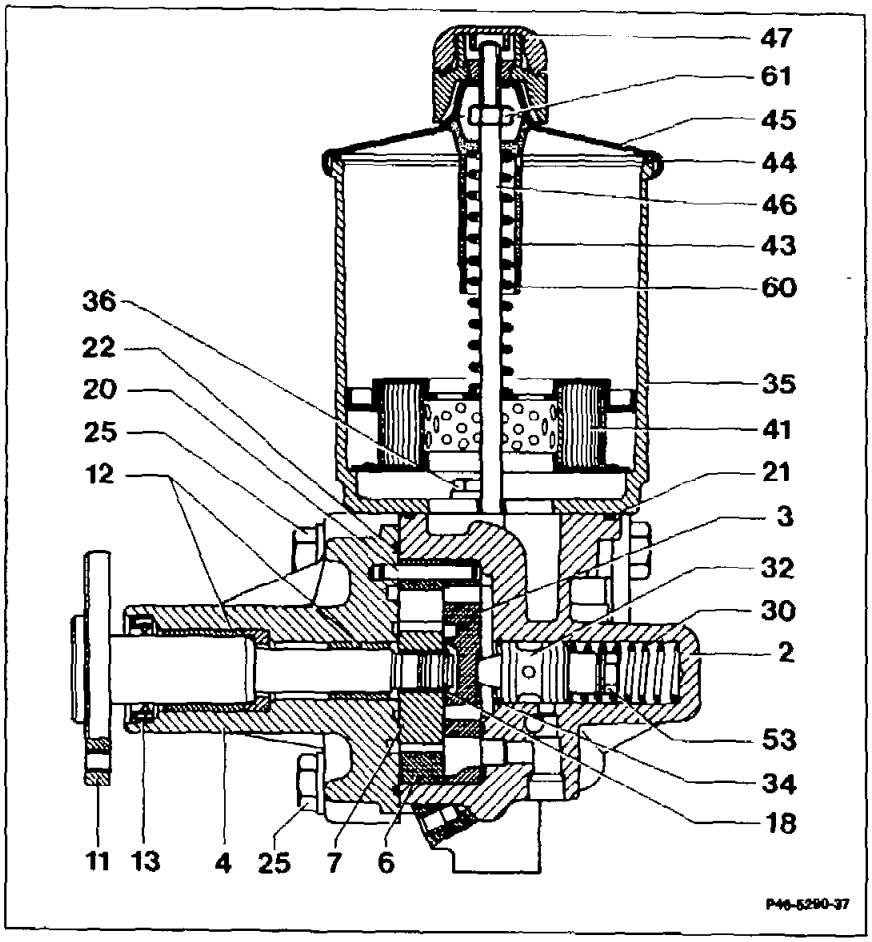

25 Insert filter set (41), spring (43) and plastic sleeve (60), compress slightly and install new self-locking nut (61). Fit on end cover (45), screw on breather cap (47).

26 After installing power steering pump (operation no. 46–4000), check that power steering pump operates properly and is free of leaks. If necessary, connect pressure gauge and test delivery pressure (46–3070). Fill or bleed systems (46–0715).

B. Tandem pump – models 62, 162

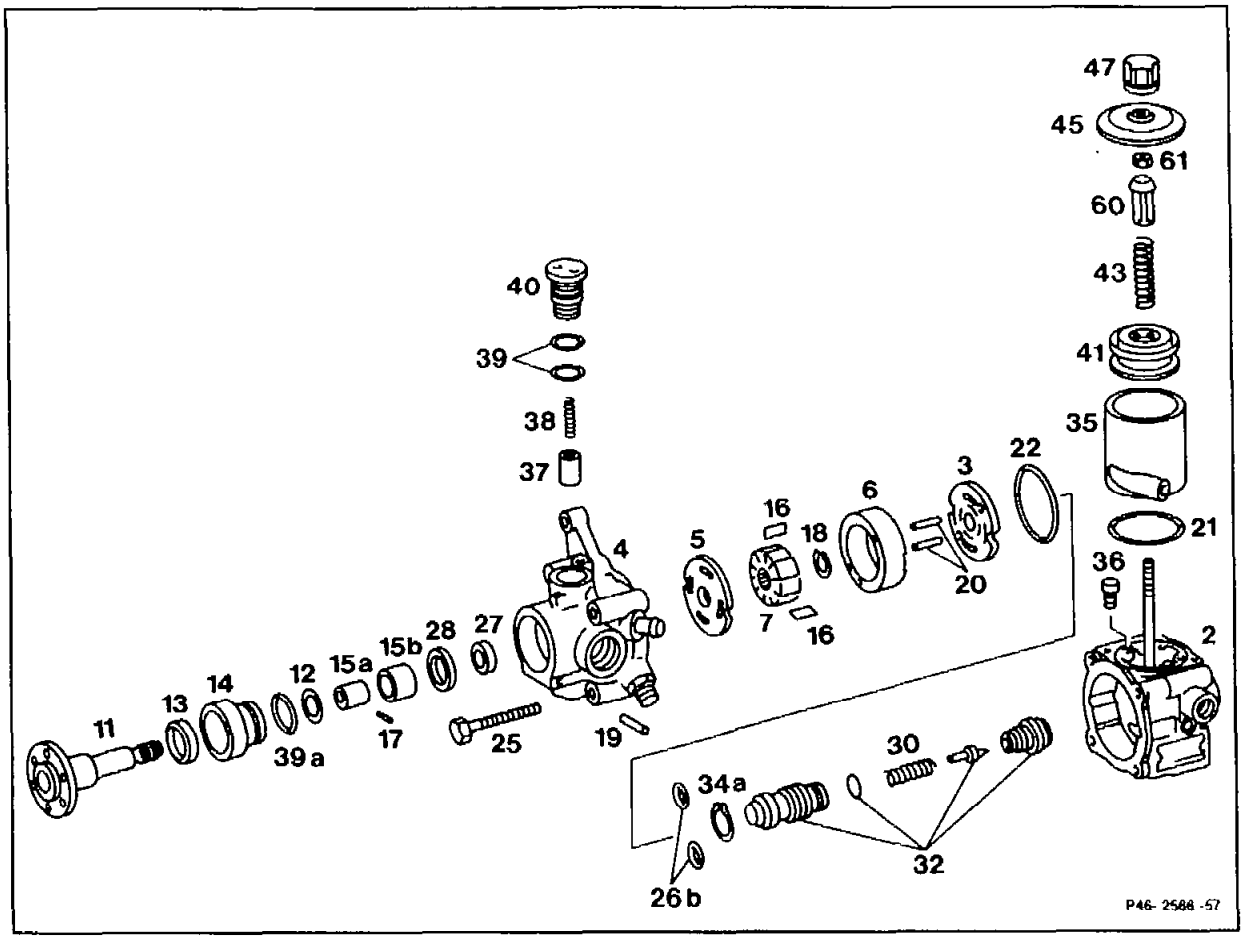

Breather cap (47)	remove, install end cover (45) (numbers 1 and 43).
Self-locking nut (61)	unscrew, screw on, replace (numbers 2 and 43).
Plastic sleeve (60), spring (43) and filter set (41)	take off, install (numbers 2 and 43).
Fluid reservoir (35)	unscrew, screw on, 8 Nm, replace O-ring (21) (numbers 3 and 42).
Bolts (25)	unscrew, screw in, 30–35 Nm, take off bearing flange (4), check O-rings (22 and 26b) (numbers 4 and 41).
Pressure plate (3) and cam insert (6)	take off. When installing, insert cam insert with direction of rotation arrow facing up, and pressure plate (3) with the ground side facing cam insert (6), into straight pins (20) (numbers 5, 6 and 39).
Locking ring (18)	remove, install and replace (numbers 7 and 37).

Rotor (7)	take off, fit on rotor with chamfer on inner diameter facing flange of drive shaft (numbers 8 and 36).
Thrust washer (5)	remove, install (numbers 9 and 35).
4 screw cartridges (40)	unscrew, screw in with pronged wrench 129 589 02 07 00, 40 ± 5 Nm, check O-rings (39), replace if necessary (numbers 10, 11, 33 and 34).
Piston (37)	check for ease of movement (number 11).
Roll pin (19)	knock out, knock in with suitable mandrel (numbers 12 and 32).
Drive shaft (11) with sleeve (15b) and bearing flange (14)	take out of housing (4), insert. Pay attention to installed position (numbers 13 and 32).
Sleeve (15b)	remove, install, check (numbers 14 and 31).
Eccentric (15a)	take off after knocking out roll pin (17), fit on (numbers 15 and 30).
Thrust washer (12)	take off, fit on (numbers 16 and 30).
Bearing flange (14)	pull off drive shaft, fit on (numbers 17 and 29) Replace O-ring (39a). Check drive shaft at bearing points for signs of wear (number 19).
Radial seal ring (13)	remove, install, replace. Use suitable mandrel (numbers 18 and 29).
Radial seal ring (27)	check, if necessary remove from housing (4) with puller 000 589 33 33 00 and 116 589 05 34 00 together with washer (28), replace. Press in new radial seal ring (27) as far as the stop. Press in washer (28) with groove facing radial seal ring (27) (numbers 20, 21, 27 and 28).
Flow control valve (32)	remove, install, disassemble and check (numbers 23 and 24).

Note

When repairing the tandem pump, always use the repair kit of the respective manufacturer.
Scrupulous cleanliness should be observed when performing any work on the tandem pump.
The work should be performed on a plastic base, if possible; chamois leathers are particularly suitable for this kind of work.
A strict standard should be applied when examining steering parts.

Special tools

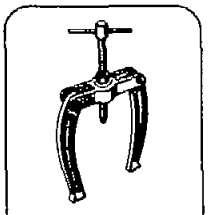

000 589 33 33 00
00 03 05 26 28 46

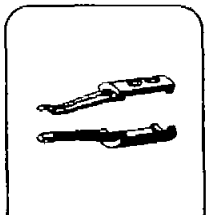

116 589 05 34 00
46

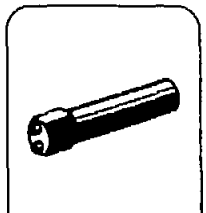

129 589 02 07 00
46

Disassembly

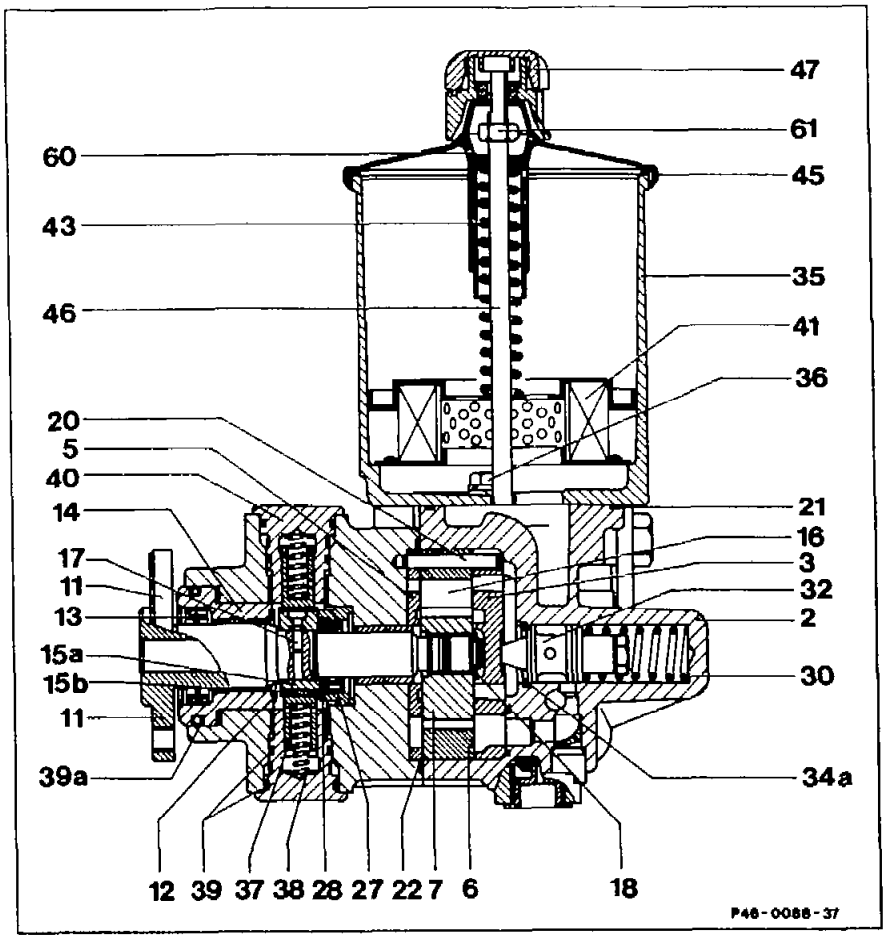

1 Screw down breather cap (47), take off end cover (45).

2 Screw down self-locking nut (61) of the stud bolt (46). Take off plastic sleeve (60), spring (43) and filter set (41).

3 Unscrew bolts (36) from the pump housing (2).
Take off fluid reservoir (35) and replace O-ring (21).

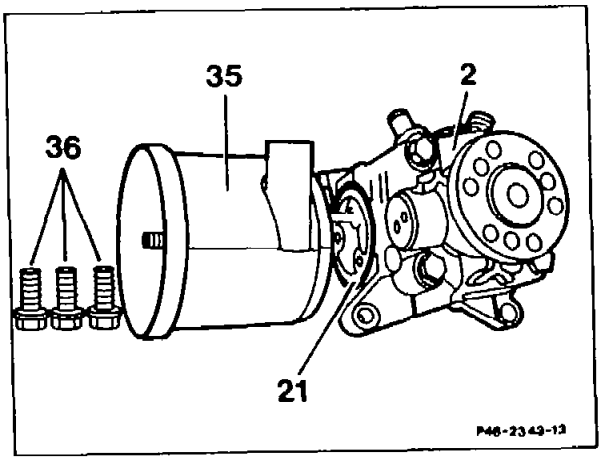

4 Unscrew bolts (25) and take off the bearing flange.
Examine ground face of bearing flange for signs of damage.

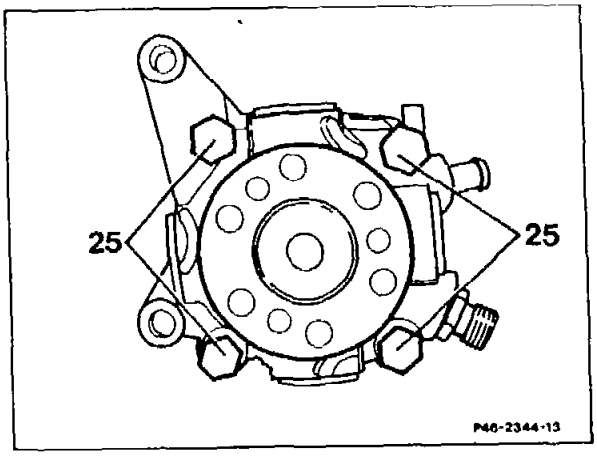

5 Take off pressure plate (3).

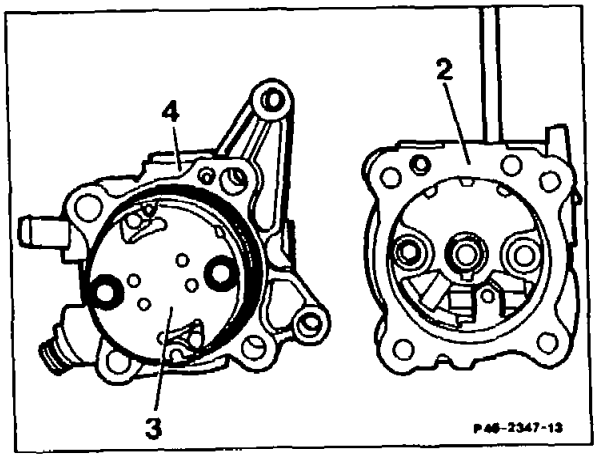

6 Take off cam insert (6).
Examine ground face of pressure plate as well as sliding face of vanes on cam insert (6) for signs of scoring and wear.
There must not be any perceptible scoring present on the sliding surface of the cam insert.

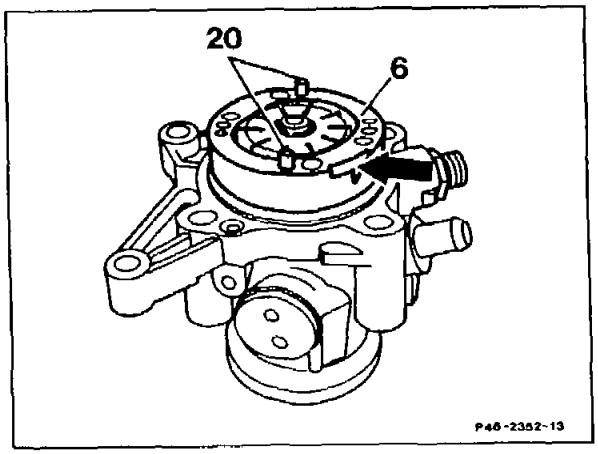

7 Take locking ring (18) off the drive shaft.
Replace locking ring.

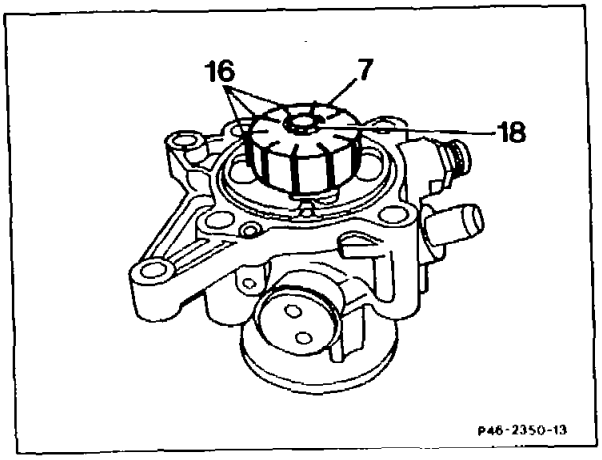

8 Detach rotor (7) from the drive shaft (11) with a plastic-headed hammer and take off together with the vanes (10 off). Check the vanes (16) in the grooves of the rotor (7); they must slide easily in the rotor.
Check sliding face of vanes at cam insert for signs of wear. If necessary, repair power steering pump by using the "Pump insert" repair kit.

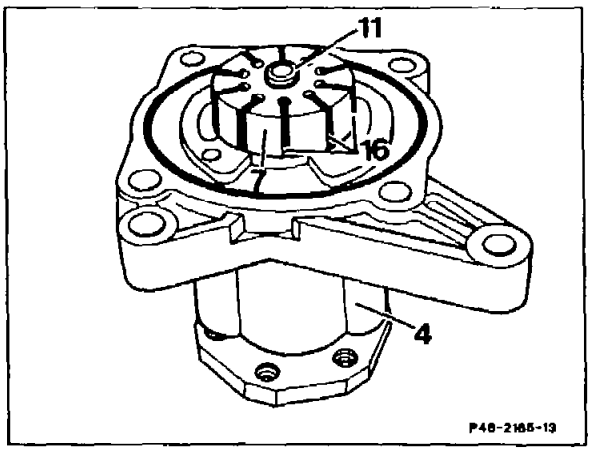

9 Take off thrust washer (5).

Note
On tandem pumps (1st version), no thrust washer (5) is fitted. If, on these tandem pumps, it is found that the drive shaft does not move freely, is seized or fractured, the tandem pump must be replaced.

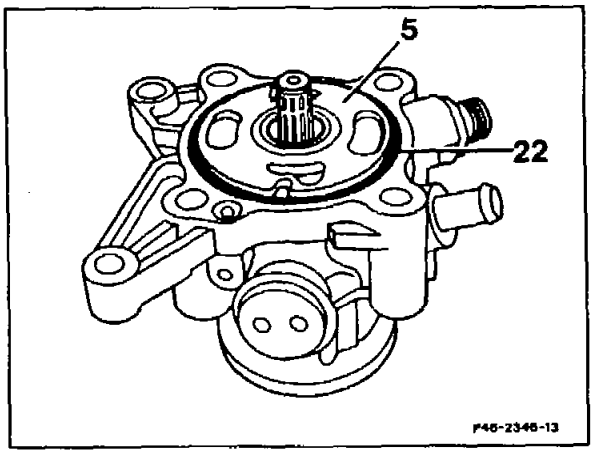

10 Number screw cartridges (40) consecutively from 1–4, then unscrew all 4 screw cartridges (40) from the housing with the pin wrench (010) part no. 129 589 02 07 00.

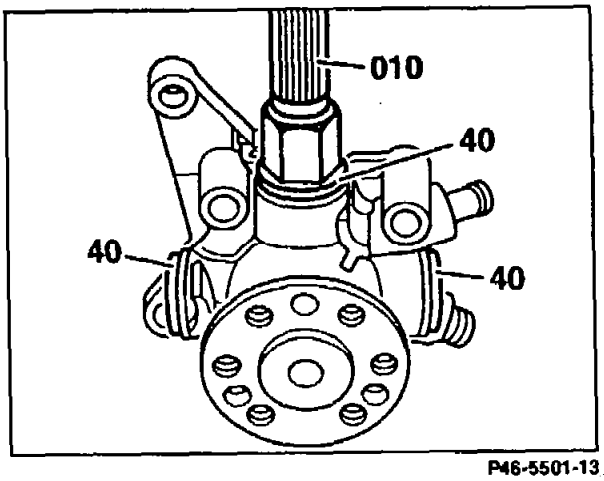

11 Check seals (39), replace if necessary. Take piston (37) and spring (38) out of the screw cartridge (40). Examine piston and piston track for signs of damage and wear. It must be possible to move the piston in the screw cartridge (40) easily and without it jamming. If this is not the case, replace the screw cartridge.

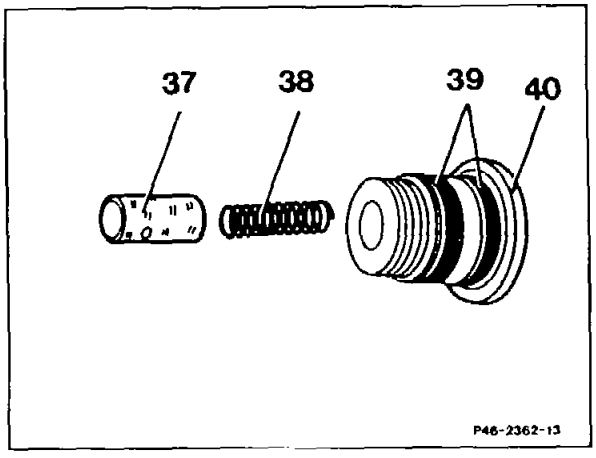

12 Knock roll pin (19) out of the housing with a suitable mandrel.

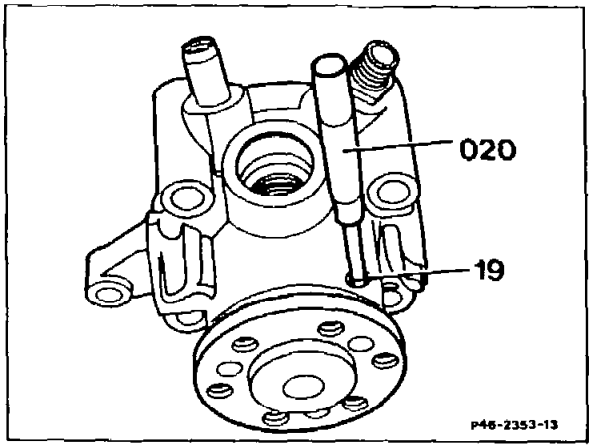

13 Take drive shaft (11) together with sleeve (15b) and bearing flange (14) out of the housing.

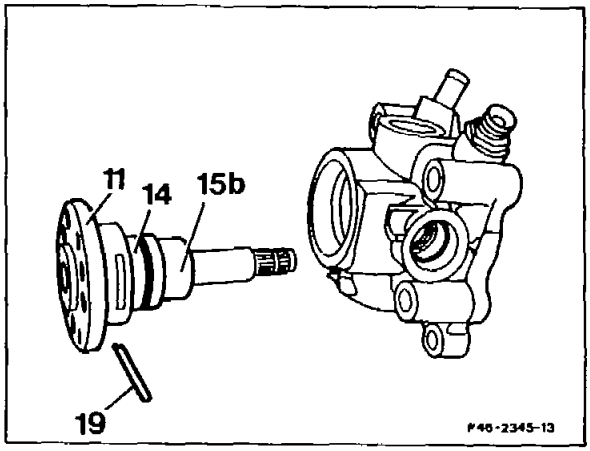

14 Take off sleeve (15b), check.

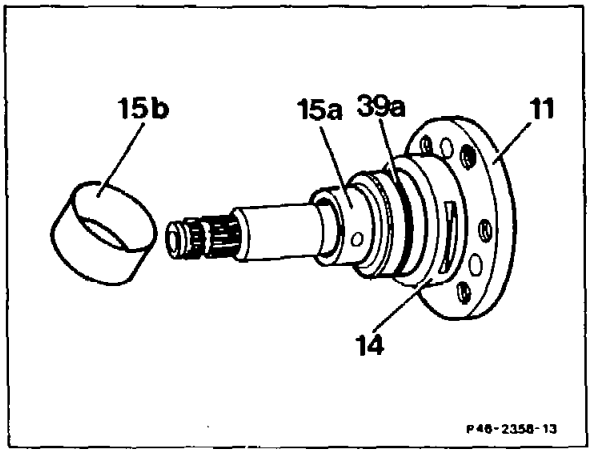

15 Knock out pin (17) with mandrel and take off eccentric (15a).

16 Take off thrust washer (12), check.

17 Pull bearing flange (14) off the drive shaft (11).

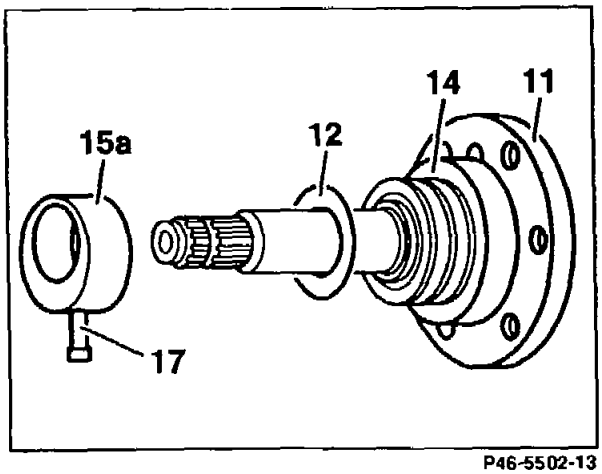

P46-5502-13

18 Use a screwdriver to press radial seal ring (13) out of the bearing flange.
Examine bronze bush in bearing flange for signs of damage and wear. If scoring and signs of rubbing are detectable, the bearing flange should be replaced completely.
Replace O-ring (39a).

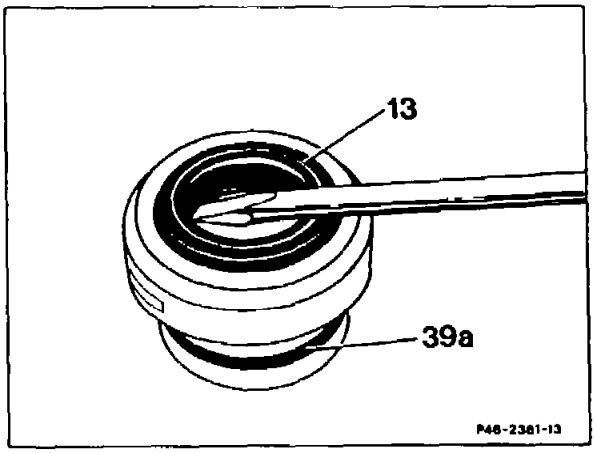

19 Examine bearing points (arrows) of drive shaft for signs of scoring and wear.

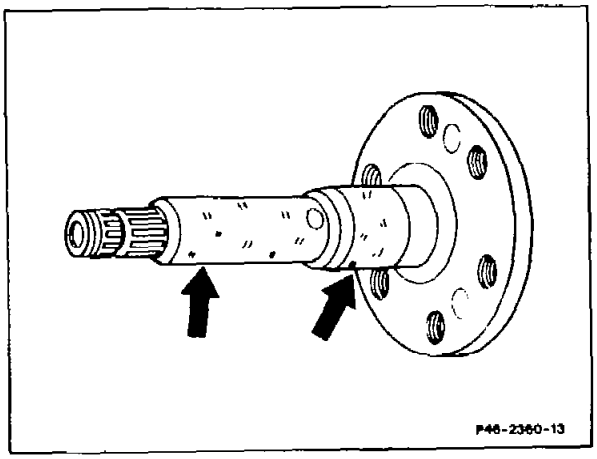

20 Check radial seal ring (27) in the housing. If oil from the high-pressure system is found in the servo circuit or vice versa, the cause may be the radial seal ring (27).

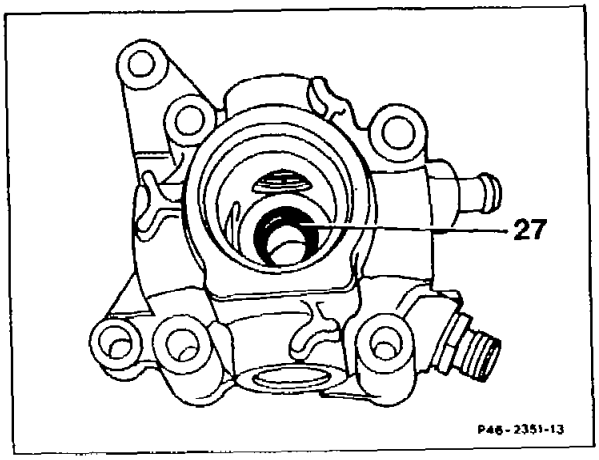

21 Pull out radial seal ring and washer (28) with internal extractor 000 589 33 33 00. Examine bronze bush in housing (4) for signs of damage and wear, replace housing, if necessary.

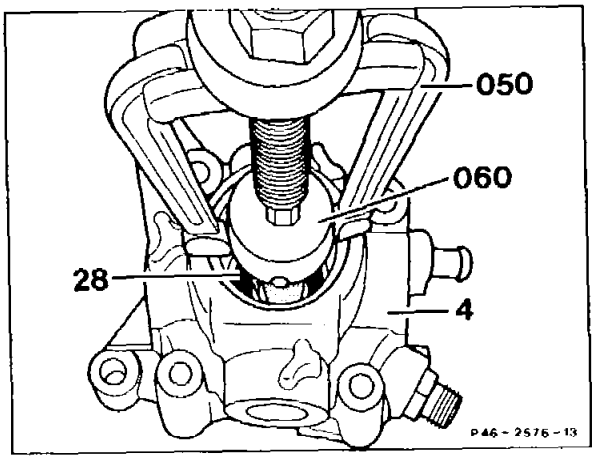

22 Remove locking ring (34a).

⚠
When removing locking ring, ensure that the housing bore is not damaged.

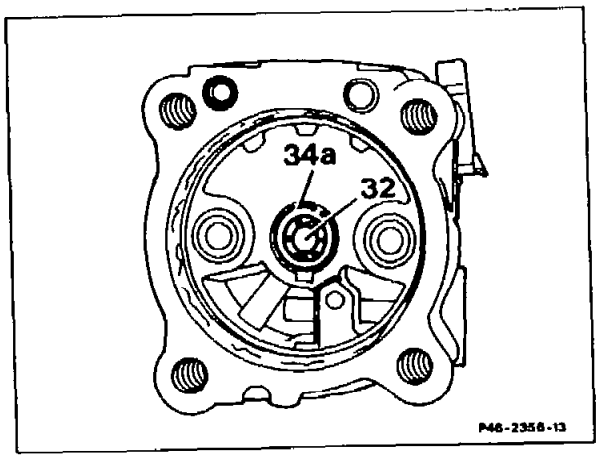

23 Take flow control valve (32) and compression spring (30) out of the pump housing (2).

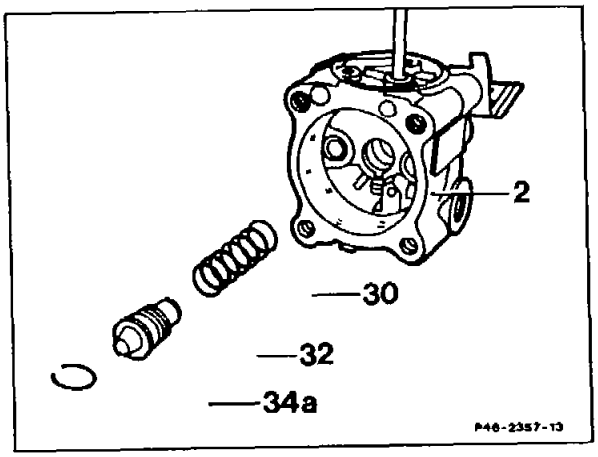

24 Clamp flow control valve (32) in a vise at a part which is not ground and unscrew valve screw (53) of the overpressure valve.
Take out sealing cone (51) and compression spring (50).
Examine the ground faces of the flow control valve (32) and the bore in the pump housing for signs of wear and damage. If scoring is found on the sliding surfaces, **the tandem pump must be replaced.**

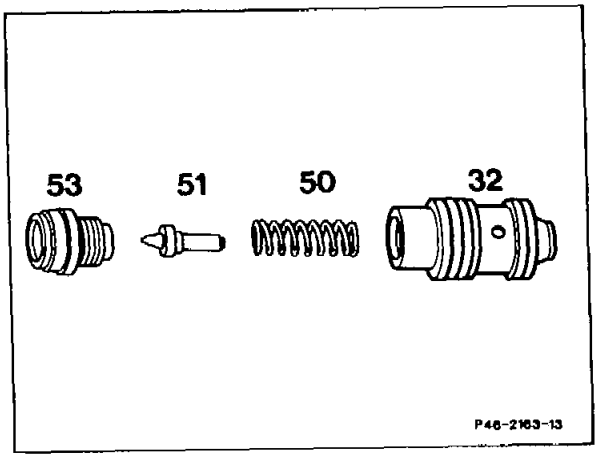

25 Check both sealing cones (high-pressure expansion hose, return pipe connection). Replace misshapen sealing cones. This is done by cutting a thread with M7 or M10 a few thread turns deep into the sealing cone. Withdraw the sealing cone from the housing with an M7 or M10 bolt.
Fit on new sealing cone in housing and press into the housing by screwing in the high-pressure expansion hose or the return pipe.

Assembly

Note
Before assembling, moisten all parts with oil.
Replace all O-rings.
If fitting a new flow control valve, pay attention to the correct opening pressure of the overpressure valve.

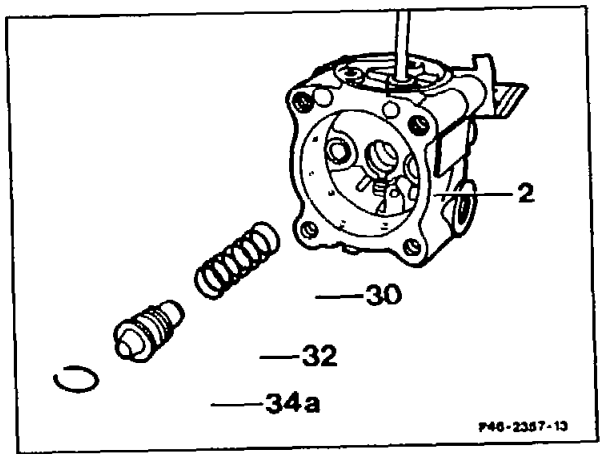

26 Assemble flow control valve (32), carefully insert together with spring (30) into the pump housing (2) and secure with locking ring (34a). The valve must slide easily in the bore of the housing.

27 Press in radial seal ring (28) as far as the stop with a suitable mandrel.

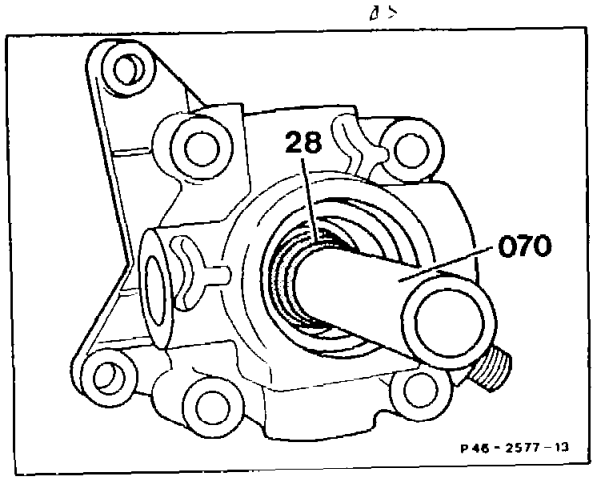

28 Press spacer ring (27) into the housing (4) with groove facing seal.

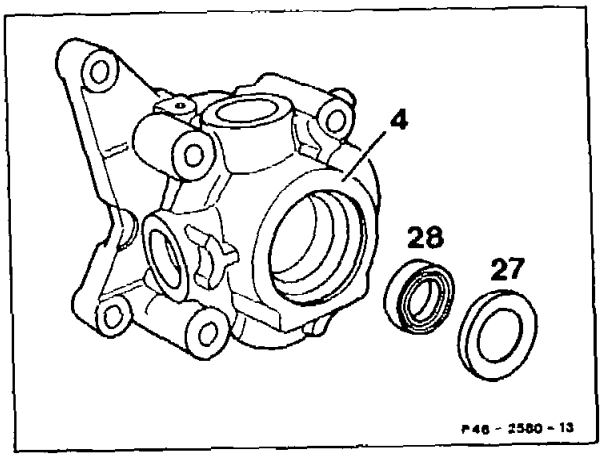

29 Press radial seal ring (13) into the bearing flange (14) using a suitable mandrel (030).
Fit on O-ring.
Carefully insert drive shaft into bearing flange.

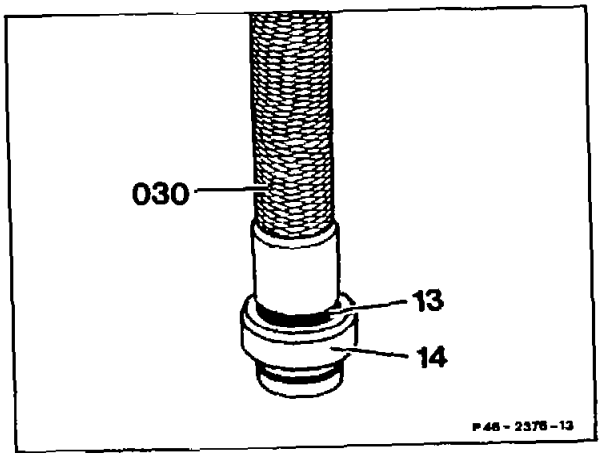

30 Fit thrust washer (12) and eccentric (15a) onto the drive shaft. Secure eccentric with pin (17).
Knock pin as far as the stop.

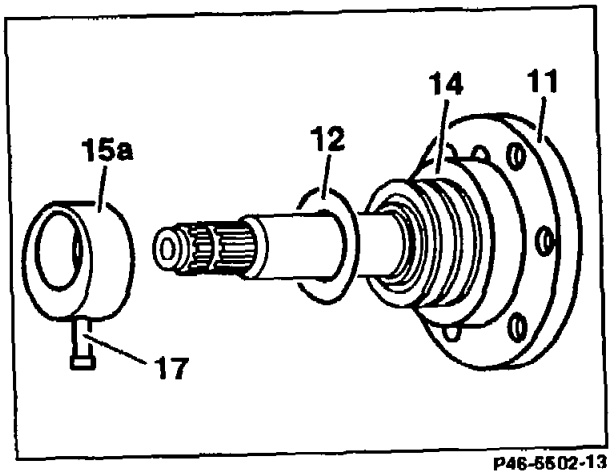

31 Push oiled sleeve (15b) over the eccentric (15a).

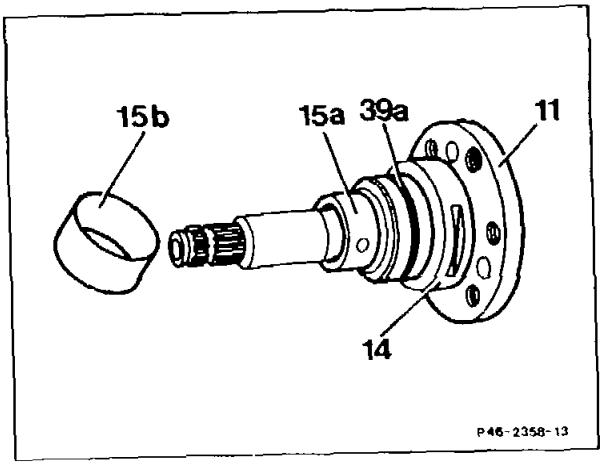

32 Carefully insert drive shaft (11) together with bearing flange (14) into the housing (do not damage seal). Ensure that the groove for the roll pin (19) is parallel to the roll pin bore.
Knock roll pin (19) into the housing.

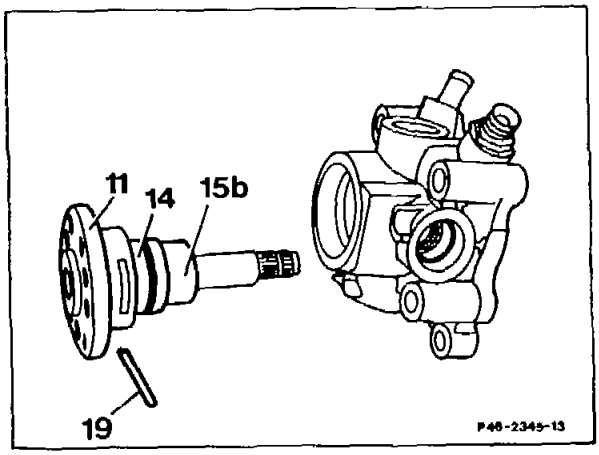

33 Insert spring (38) and piston (37) into the screw cartridge (40).
Piston and housing must always be matched to each other.

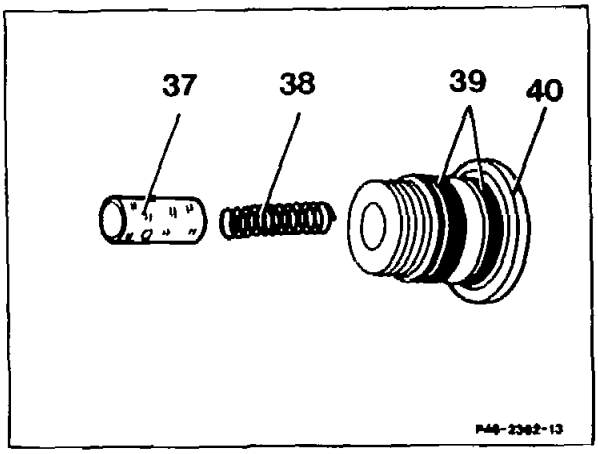

34 Screw all 4 screw cartridges (40) into the housing in the consecutively numbered order shown in number 10, 40 ± 5 Nm. Use pronged wrench 129 589 02 07 00.

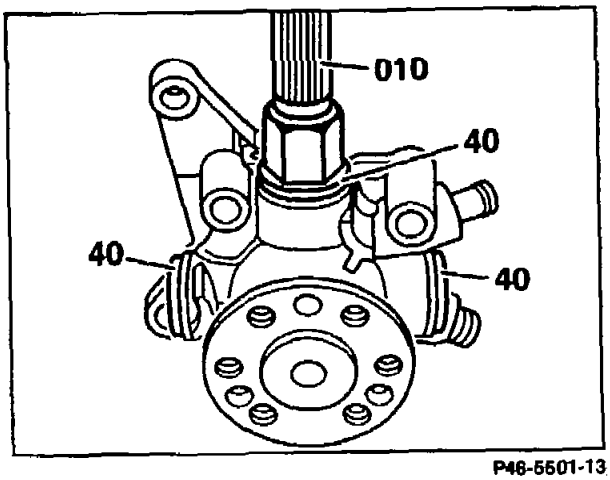

35 Insert thrust washer (5) and O-ring (22) into the housing. Bronze-coated side of the thrust washer (5) must be installed facing the rotor.

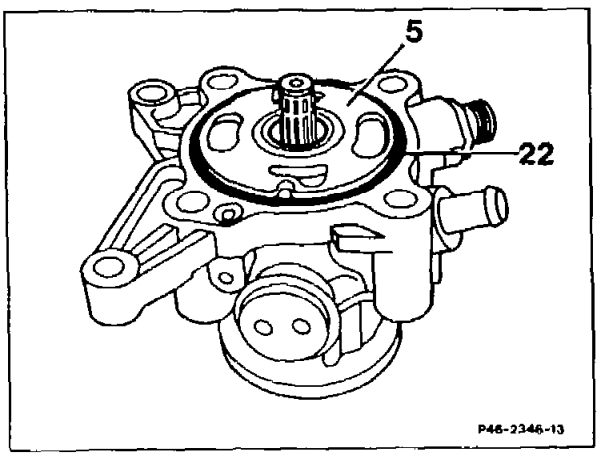

36 Fit rotor onto the drive shaft so that the chamfer on the inner diameter (arrow) is facing the thrust washer.

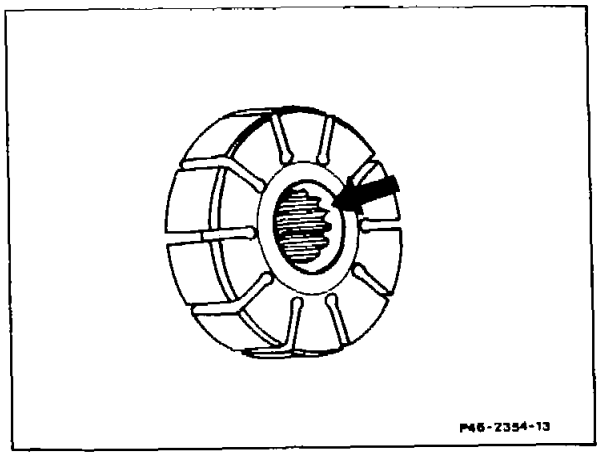

37 Install new locking ring (18). The locking ring (18) must be correctly seated in the groove of the drive shaft.

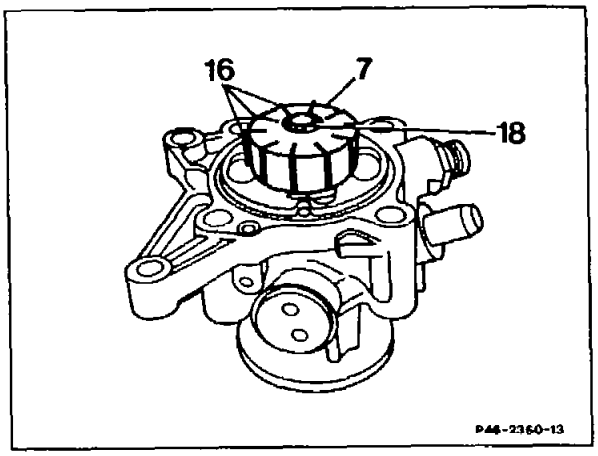

38 Insert vanes (10 off) into the rotor with the rounded metallic glossy sides (arrow) facing the cam insert.

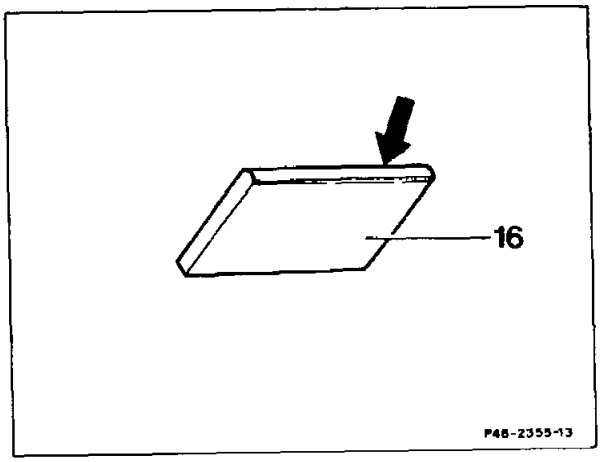

39 Insert straight pins (20), then introduce cam insert (6) into the straight pins with the cast direction of rotation arrow (arrow) facing upwards.

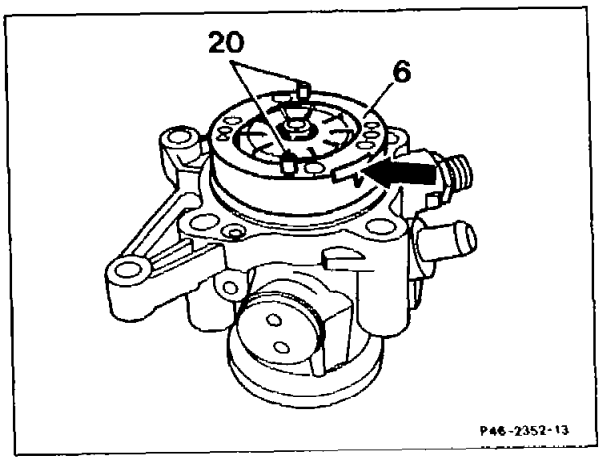

40 Fit pressure plate (3) with the ground face pointing toward cam insert (6).
Fit O-rings (26b) onto the pressure plate with grease.

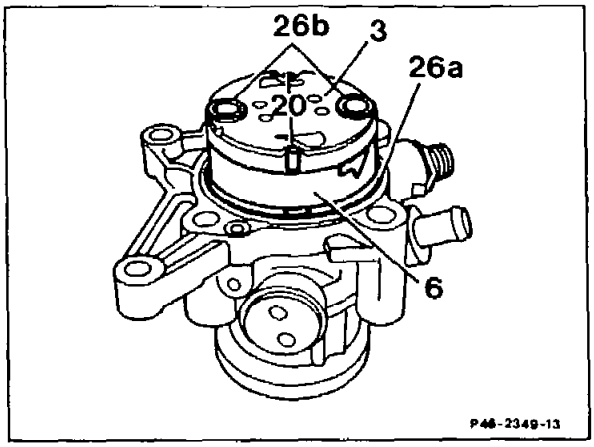

41 Insert bearing flange in the pump housing and attach with the hexagon bolts (25).
Tightening torque 30–35 Nm.

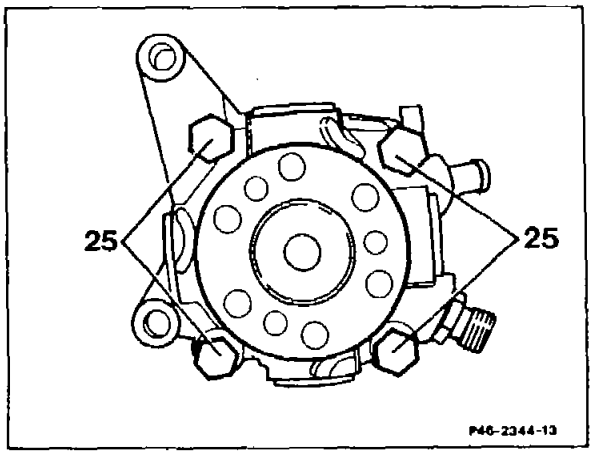

42 Insert new O-ring (21), then fit on fluid reservoir (35) and attach with bolts (36).
Tightening torque 8 Nm.

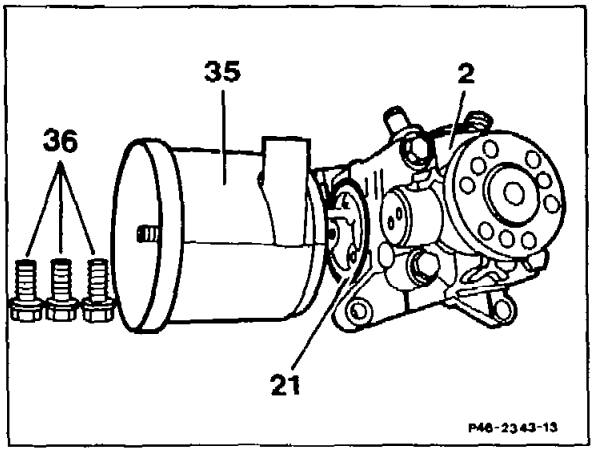

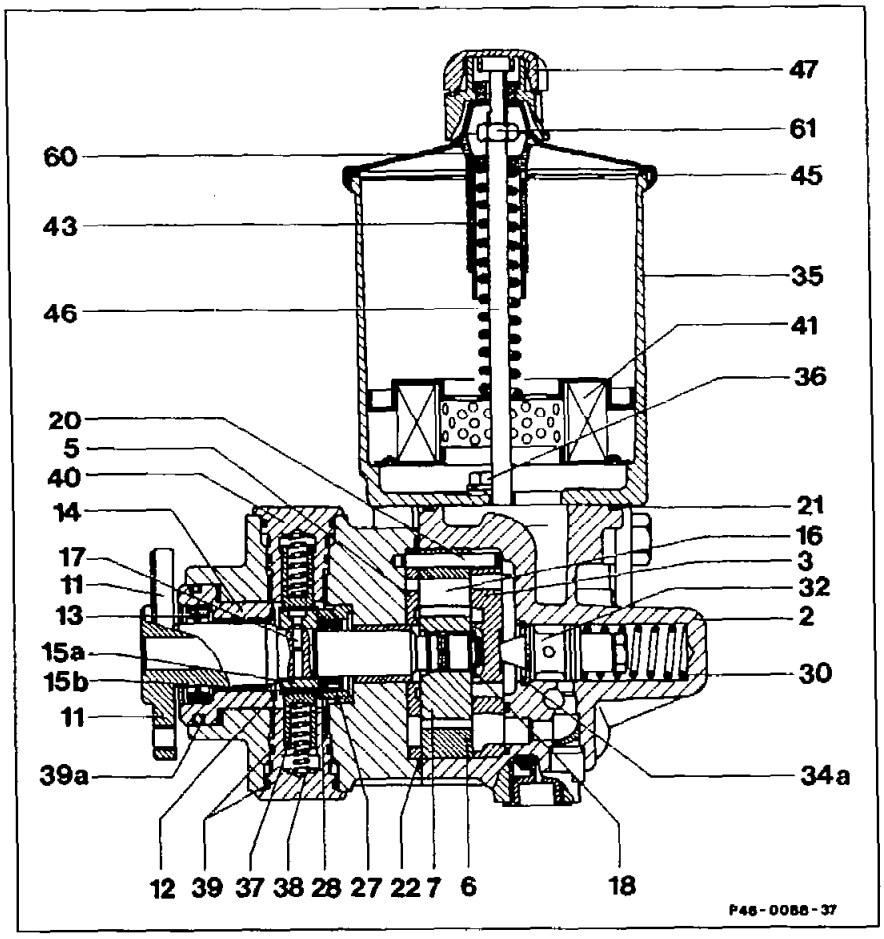

43 Insert filter set (41), spring (43) and plastic sleeve (60), compress slightly and install new self-locking nut (61). Fit on end cover (45), screw on breather cap.

44 After installing tandem pump (Operation no. 46–4000), check tandem pump for proper operation and signs of leaks. Connect pressure gauge, if necessary, and test delivery pressure of the power circuit (operation no. 46–3070). Fill or bleed systems (operation no. 46–0715).

C. Tandem pump models 67, 167

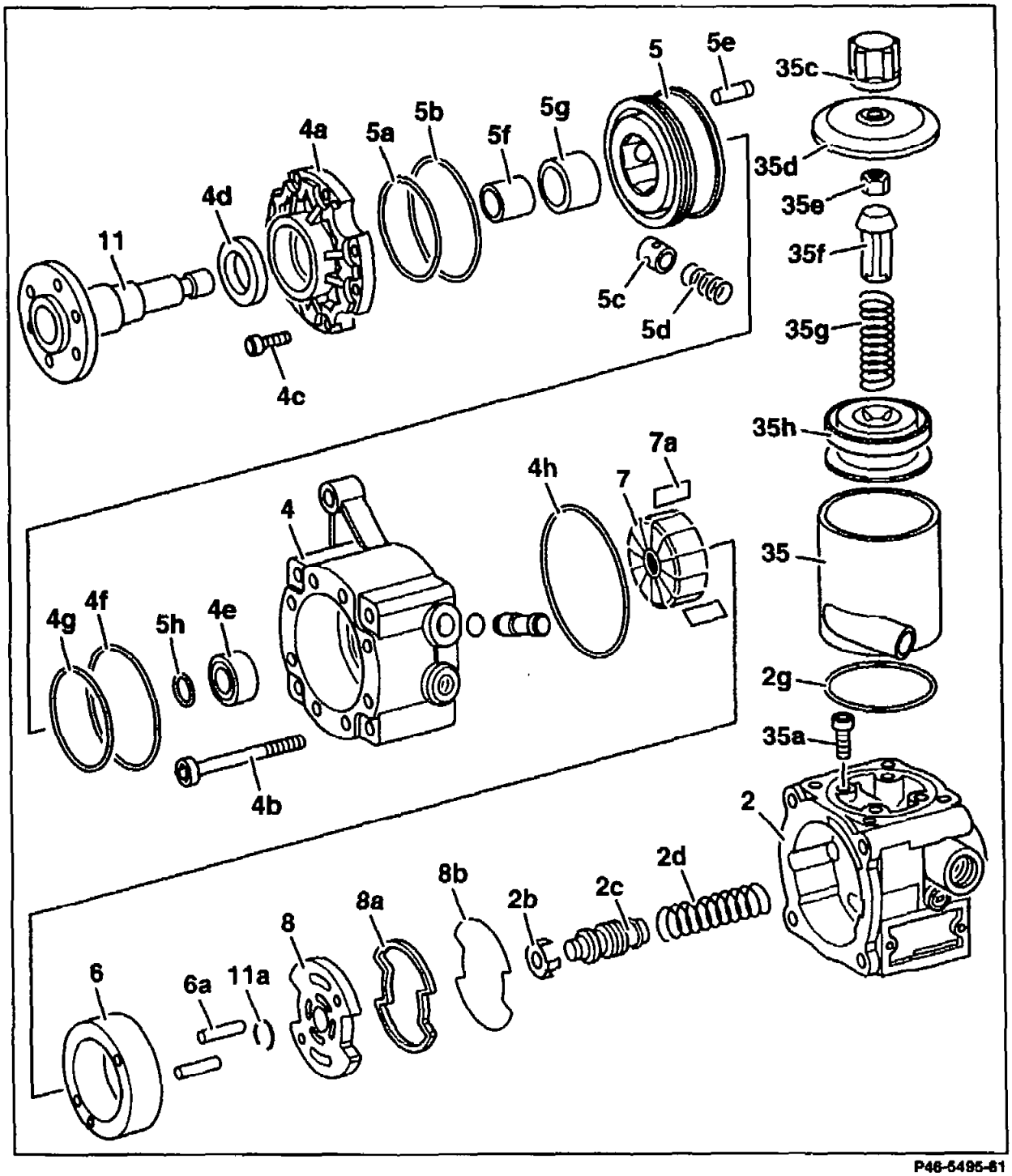

P46-5496-81

	Follow note for models 129 and 140.
Vent cap (35c) and end cover (35d)	remove, install (numbers 1 and 43).
Self-locking nut (35e)	remove, replace, screw on (numbers 2 and 43).
Plastic sleeve (35f), spring (35g) and filter set (35h)	remove, install (numbers 2 and 43).

Reservoir (35)	disassemble, assemble. Unscrew, screw on reservoir, 8 Nm. Replace O-ring (2g) (numbers 3 and 42).
screws M8 (4b)	4 unscrew, screw on, 25 Nm. Detach, attach pump housing (2), numbers 4 and 39).
O-ring (4h) in bearing flange	check, replace if required (numbers 5 and 38).
Pressure plate (8)	remove, install, check O-ring (8a) and shaped wedge (8b), replace if required (numbers 5 and 38).
Cam insert (6) and straight pins (6a)	remove, check, install, note installed position (numbers 6 and 37).
Locking ring (11a)	remove, replace, install (numbers 7 and 34).
Rotor (7) and vanes (7a)	remove, check, install and repair if required. Note installed position (numbers 7 and 33).
Drive shaft (11)	withdraw from bearing flange, check for wear, replace if required, install (numbers 8–10 and 30–32, note version).
8 screws M6 (4c)	unscrew, screw in 10 Nm. Remove, install bearing flange cap (4a). Check radial seal ring (4d), replace if required (numbers 10 and 32).
Bearing sleeve (5f) and bearing shell (5g)	remove, check, replace O–ring (5a), install (numbers 11 and 29).
Piston (5c) and piston springs (5d)	remove, check for wear and damage, install. Follow note (numbers 12 and 27).
Spacer washer (5h)	remove, install (numbers 13 and 26).
Piston support ring (5)	remove from, press into bearing flange housing (4) (number 14). Note manufacturer-related (number 25). Replace O-rings (5b).
O-ring (4f) and shaped wedge (4g)	replace in bearing flange housing (4) (numbers 16 and 24).
Radial seal ring (4e)	check, replace if required (17 and 23).

Flow control valve (2c)	disassemble, check, assemble, replace tandem pump if required (numbers 18, 19 and 21, 22).
	⚠ When removing the locking ring, ensure that the housing bore is not damaged. Check the ground surfaces of the flow control valve (2c) and the bore in the pump housing for wear and damage. If scores are found on the sliding surfaces, **the tandem pump must be replaced.**
After installing the tandem pump	fill or bleed systems (operation no. 46–0715) and check for operation and leaks.

Note

When repairing the tandem pump, the repair kit of the respective manufacturer must be used. Scrupulous cleanliness should be observed when performing any work on the tandem pump. The work should be performed on a plastic base, if possible; chamois leathers are particularly suitable.
A strict standard should be applied when examining steering parts.

Special tools

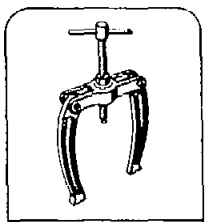

000 589 33 33 00
00 03 05 26 28 46

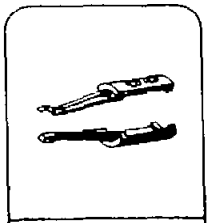

116 589 05 34 00
46

Disassembling

Note models 129.066/067, 140.04/050/051
On the above models the oil reservoir (35) is attached to a support (1a) which is screwed to the tandem pump (1).

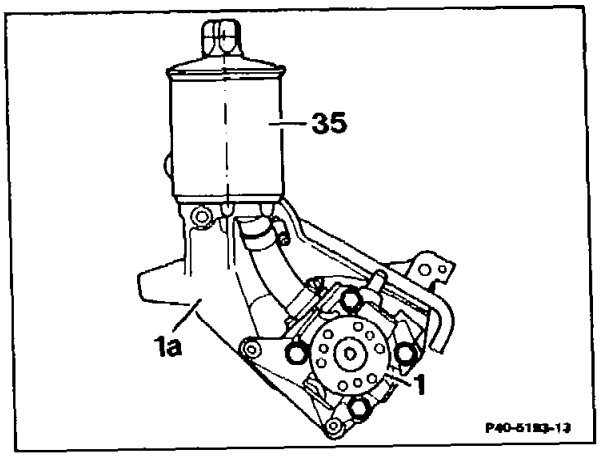

Loosen hose clamp, disconnect hose (arrow) and set aside. Unscrew bolts (46) and remove tandem pump (1) from support (1a).

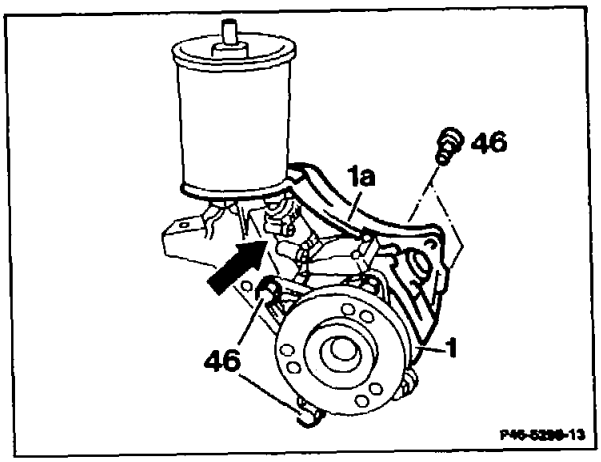

Unscrew bolts (arrow, 4 bolts). Remove end cover (2k), check O-ring (2g), replace if required. Work steps numbers 1–3 are omitted.

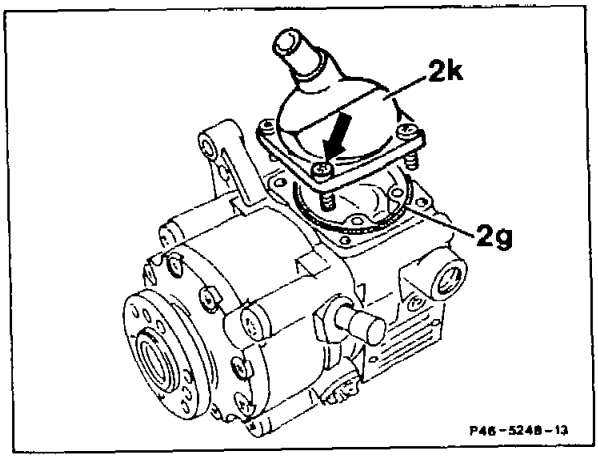

Note – models 129.076, 140.056/057
The tandem pump (1) for engine 120 has an *expansion reservoir* for equalizing the oil reservoir (35) on the pump housing which is located between the coolant thermostat and the intake pipe.

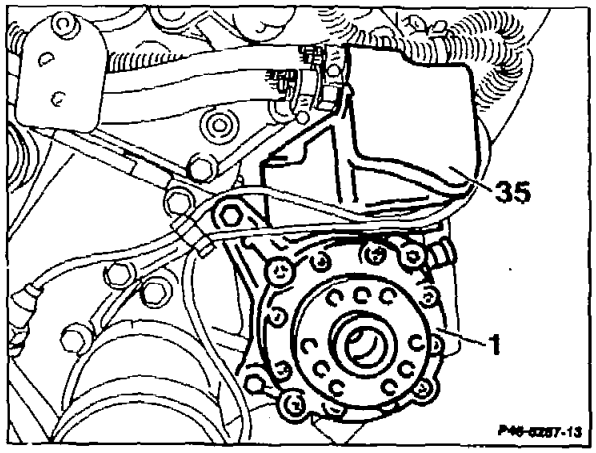

An oil dipstick (36a) with min. and max. markings for the oil level check is located on the end cover of the expansion reservoir (36).

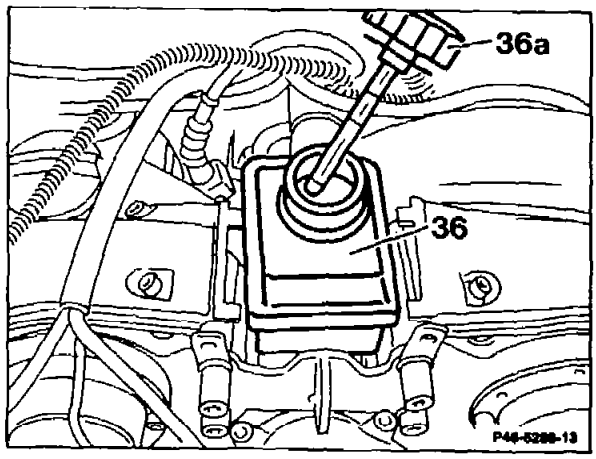

Unscrew the four bolts (35a) from the oil reservoir (35) and remove reservoir. Check O-ring (2g), replace if required. Work steps numbers 1–3 are omitted.

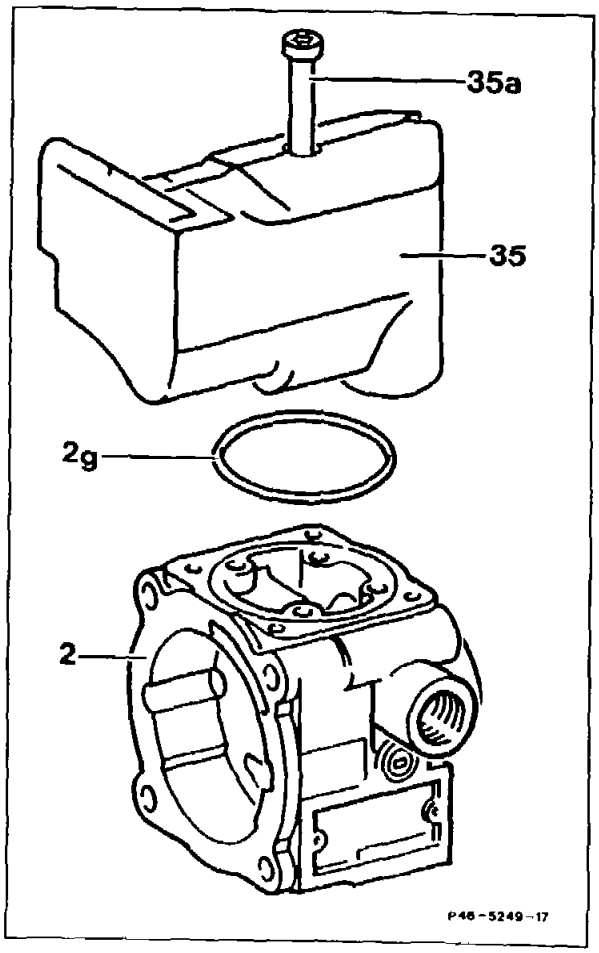

1 Screw down vent cap (35c), remove end cover (35d).

2 Unscrew self-locking nut (35e) down from the stud bolt (35i). Remove plastic sleeve (35f), spring (35g) and filter set (35h).

3 Unscrew bolts (35a, 4 bolts) in oil reservoir. Remove oil reservoir (35) and check O-ring (2g), replace if required.

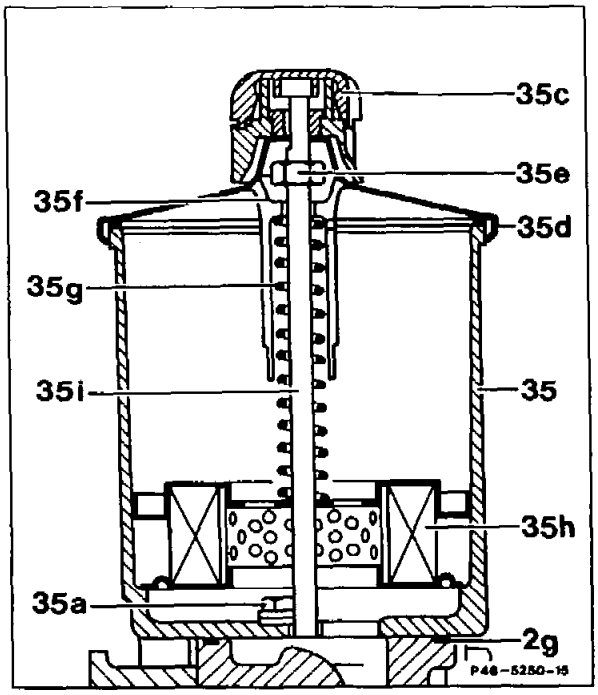

4 Unscrew bolts (4b) in bearing flange (4) and remove pump housing (2).

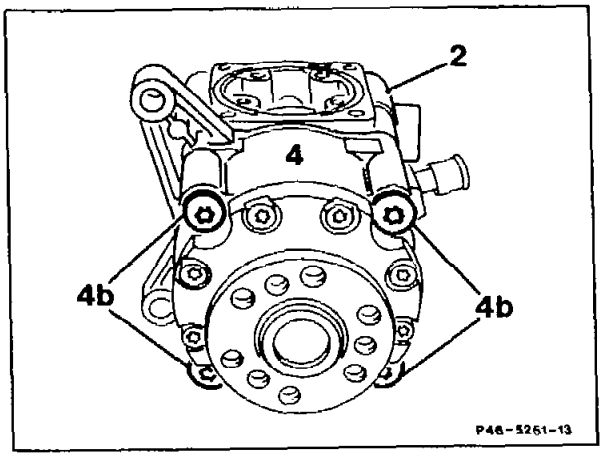

5 Remove O-ring (4h) in bearing flange (4), check, replace if required.
Remove pressure plate (8).
Check seal (8a) and shaped wedge (8b), replace if required.

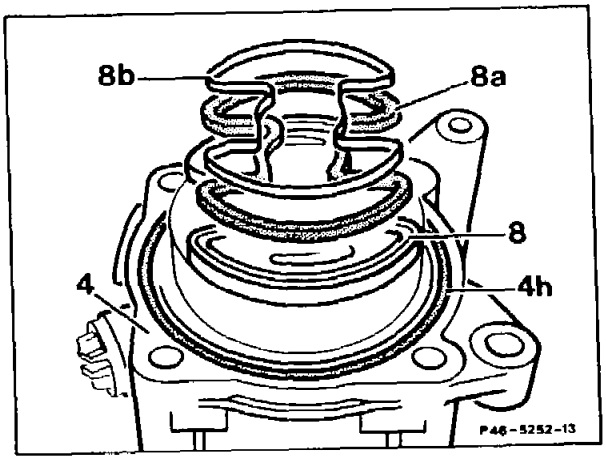

6 Remove cam insert (6) and straight pins (6a). Check ground surface of pressure plate as well as the sliding surface of the vanes on the cam insert for scores and wear.
There must be no detectable scores on the sliding surface of the cam insert.

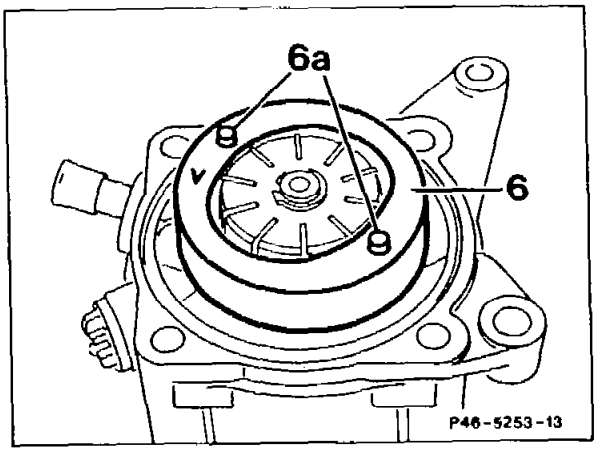

7 Remove locking ring (11a) from drive shaft (11). Replace locking ring. Detach rotor (7) from drive shaft (11) using a plastic hammer and remove all vanes (7a, 10 vanes).
Check the vanes (7a) in the grooves of the rotor (7); they must slide easily in the rotor. Check sliding surface of vanes on cam insert for wear. If required, repair power steering pump using the "pump insert" repair kit.

8 **ZF:** Withdraw drive shaft (11) from bearing flange (4).
Vickers/LUK: First carry out item 10 and remove drive shaft with bearing flange cap.

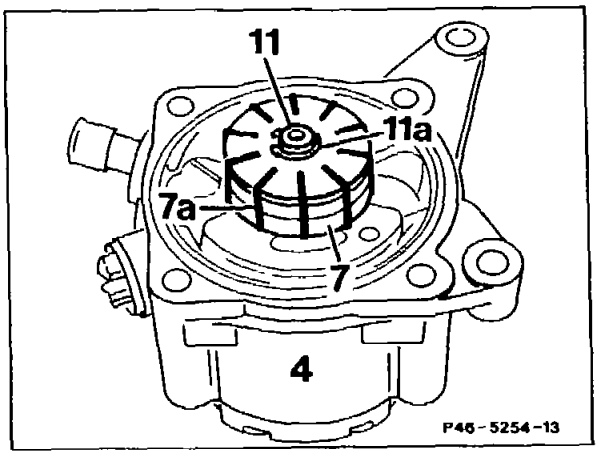

9 Check drive shaft for scores and wear at the bearing points (arrow), replace if required.

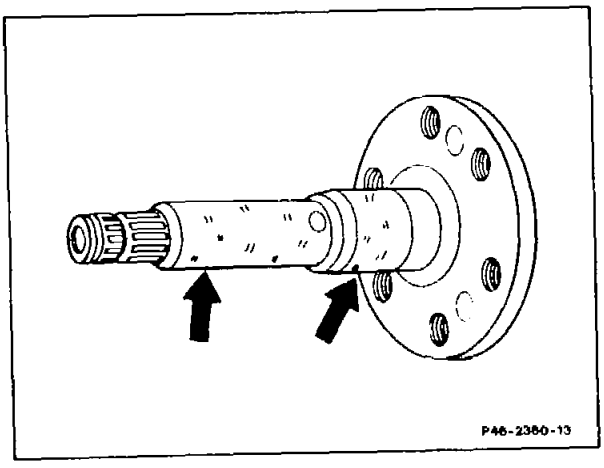

10 Unscrew bolts, 8 pieces M6, (4c) and remove bearing flange cap (4a).
Check radial seal ring (4d), replace if required.

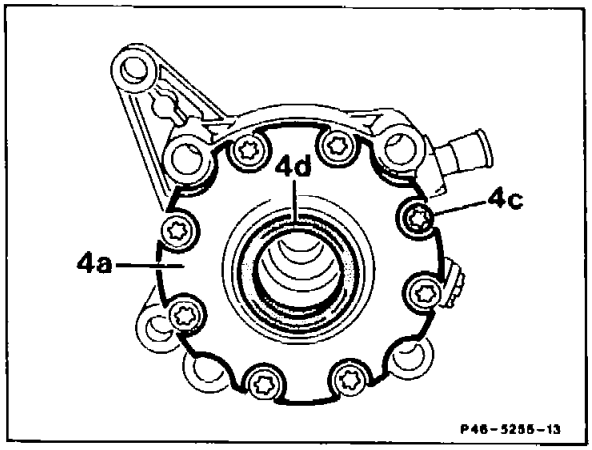

11 Replace O-ring (5a).

ZF: Remove bearing sleeve (5f) and bearing shell (5g), check, replace if required.

Vickers/LUK: Detach snap ring from drive shaft, remove the additional built-in washer and bearing sleeve (5f) with bearing shell (5g).

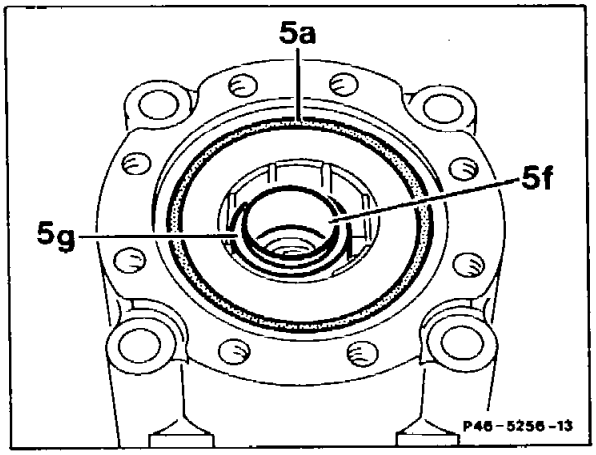

12 Withdraw piston (5c) and piston springs (5d). Check piston and piston track for wear and damage, replace if required.

Note
The piston must slide easily and without high spots in the housing. If this is not the case, the piston, piston springs and piston support ring (5) must be replaced.

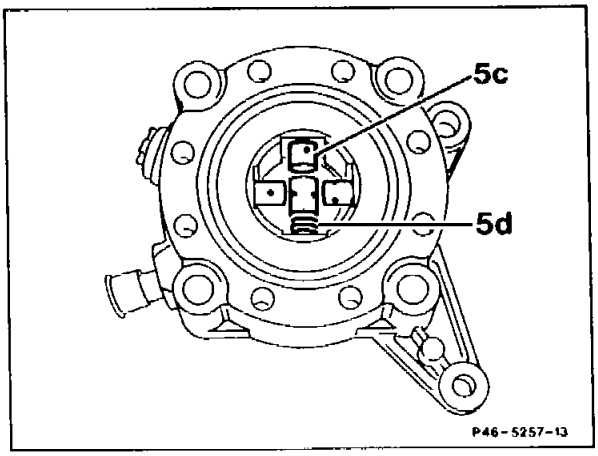

13 Remove spacer washer (5h) in the case of the ZF tandem pump.

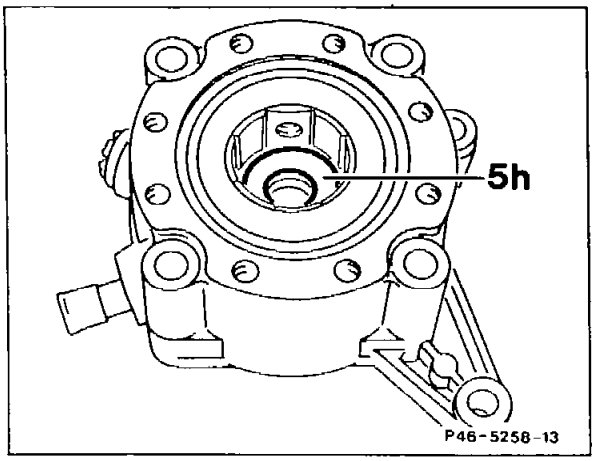

14 Tap bearing flange housing (4) between two blocks of wood until the piston support ring (5) can be removed.

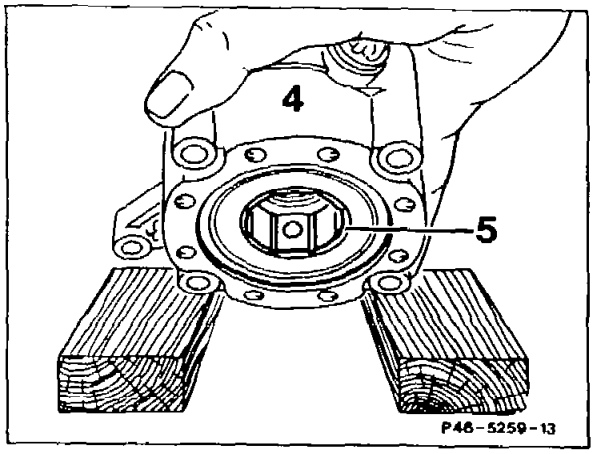

15 Replace O-rings (5b).

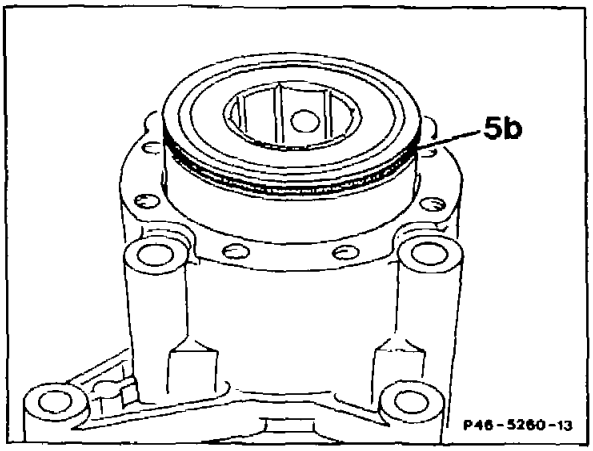

16 Replace O-ring (4f) and shaped wedge (4g) in housing.
Check radial seal ring (4e), replace if required.

Note
If oil escapes from the servo circuit to the level circuit or vice versa, the cause is in the radial seal ring (4e).

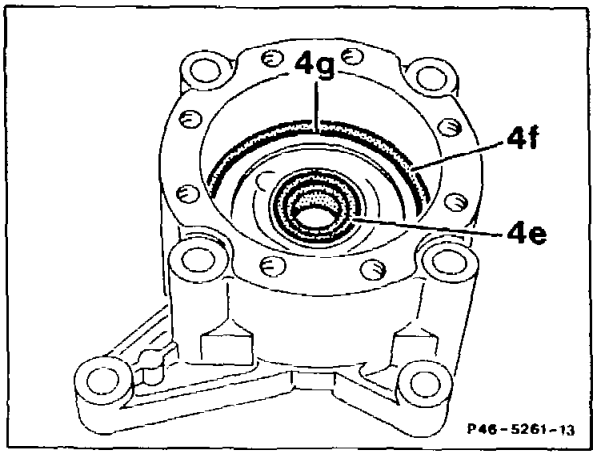

17 Withdraw radial seal ring (4e) with internal extractor 000 589 33 33 00. Check bronze bush in housing (4) for damage and wear, replace if required.

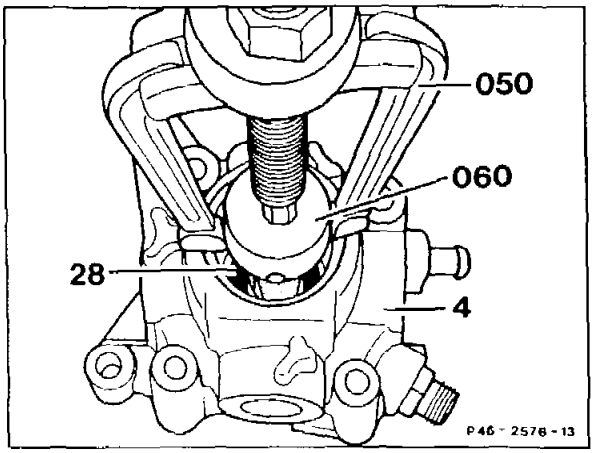

18 Remove flow control valve (2c) and compression spring (2j) from pump housing (2).

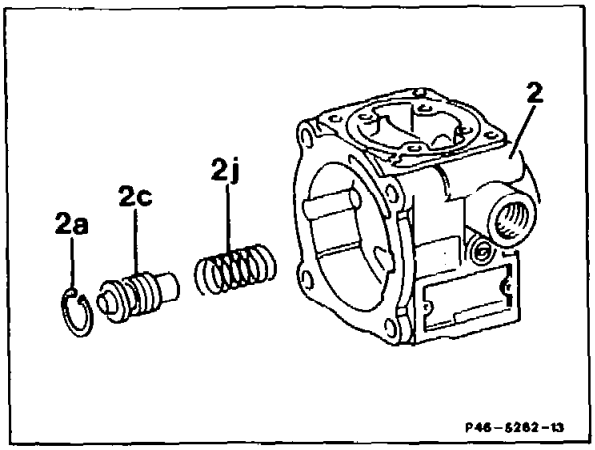

⚠
When removing the locking ring (2a), ensure that the housing bore is not damaged.

19 Clamp flow control valve (2c) in the vise at an unground section and unscrew the valve screw (2e) of the pressure relief valve. Remove sealing cone (2f) and sealing cone compression spring (2d).

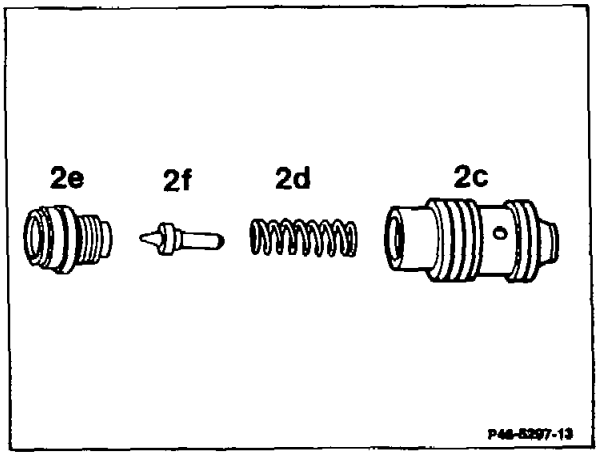

⚠
Check the ground surfaces of the flow control valve (2c) and the bore in the pump housing for wear and damage. If scores are found on the sliding surfaces **the tandem pump must be replaced.**

20 Check both sealing cones (high pressure expansion hose, return pipe connection). Replace deformed sealing cone. For this step, cut a thread in the sealing cones a few thread turns deep with M7 or M10. Withdraw the sealing cones from the housing with a M7 or M10 screw. Insert new sealing cones in housing and press into the housing by screwing the high pressure expansion hose or the return pipe into the housing.

Assembly

Note

Before assembly, lubricate all parts with oil.
Replace all O-rings.
With a new flow control valve, ensure that the pressure relief valve is at the correct opening pressure..

21 Clamp flow control valve (2c) in the vise at an unground section.
Insert sealing cone compression spring (2d) and sealing cone (2f) and screw on valve screw (2e). The valve must slide easily in the housing bore.

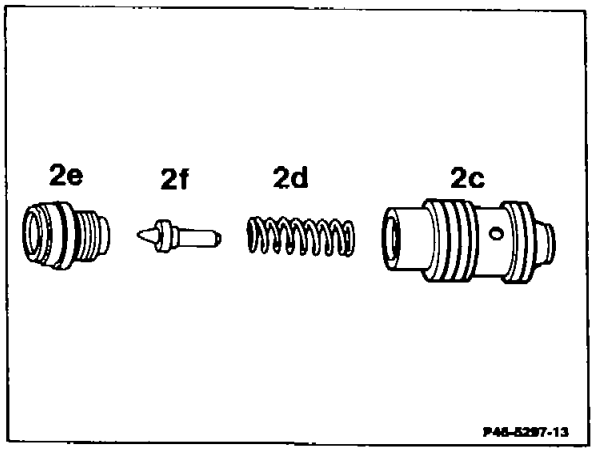

22 Insert compression spring (2j) and flow control valve (2c) in pump housing (2).

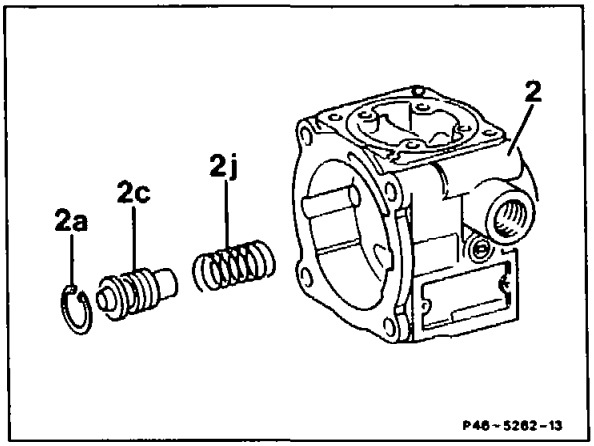

23 Press radial seal ring (4e) up to the stop using a suitable mandrel (arrow).

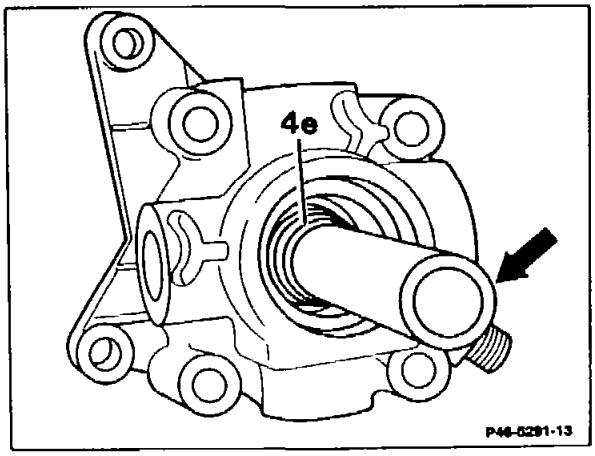

24 Insert O-ring (4f) and shaped wedge (g) in bearing flange.

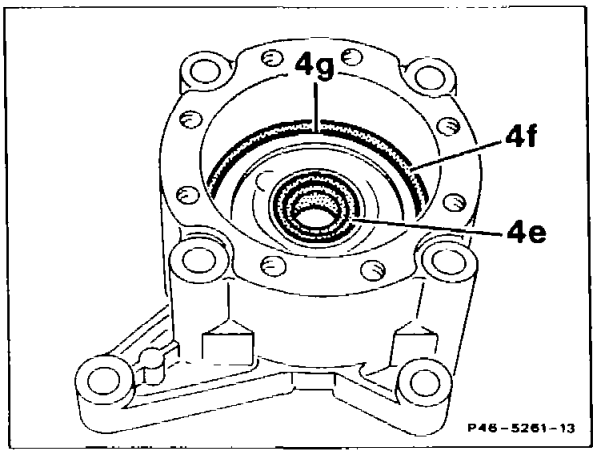

25 Place O-ring (5b) around piston support ring (5).

Mounting ZF piston support ring :

Press piston support ring (5) into bearing flange housing (2).

Ensure that centering pin (5e) is exactly above the centering bore (arrow).

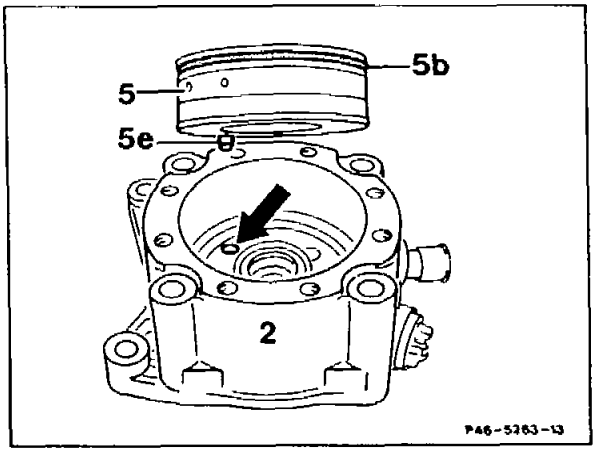

Mounting Vickers/LUK piston support ring:

Before inserting the piston support ring with the drive shaft, pre-assemble as follows:

a) Insert piston spring (5d) and piston (5c) in piston support ring (refer to number 27).

b) Insert bearing shell (5g) (refer to number 28).

c) Insert bearing sleeve (5f).

d) Insert drive shaft (11) in bearing flange cover (refer to number 30).

e) Push drive shaft into the bearing sleeve/bearing shell (5g, 5f). Mount locking ring.

f) Insert piston support ring with drive shaft in the pump housing (refer to number 31).

26 ZF: Insert spacer washer (5h).

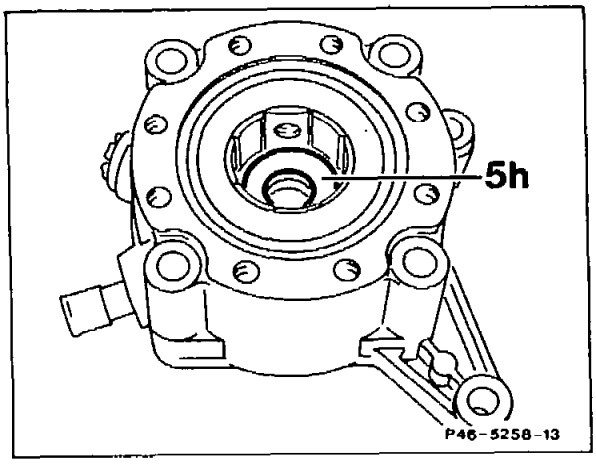

27 Insert piston spring (5d) and piston (5c) in piston support ring.

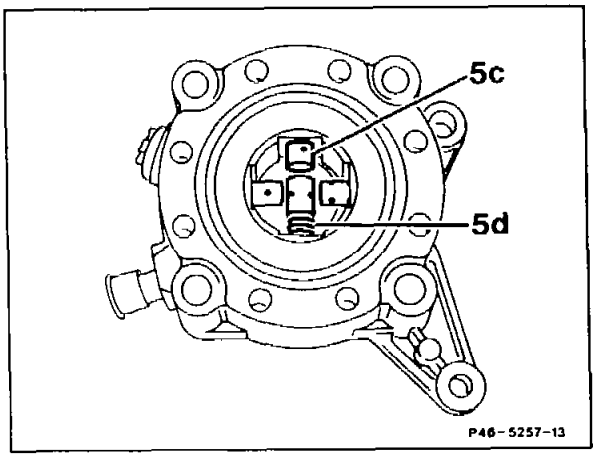

28 Place bearing shell (5g) diagonally in front of two pistons.
Carefully press remaining pistons together in the piston support ring using an Allen wrench or similar tool, whilst pressing the bearing shells using the fingers.
Mount O-ring (5a).

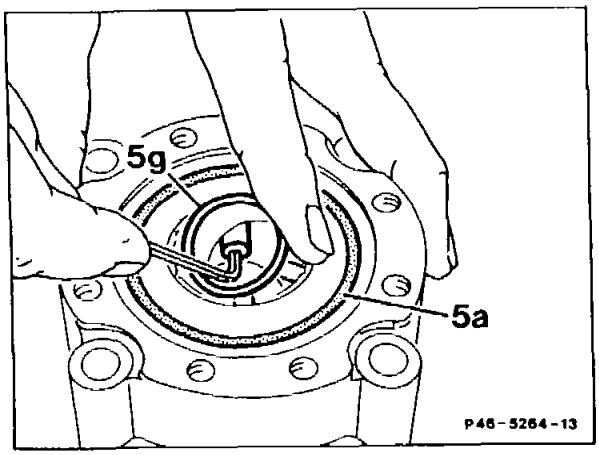

29 Insert bearing sleeve (5f) in bearing shell (5g).

⚠
Insert side milled on both sides upwards.

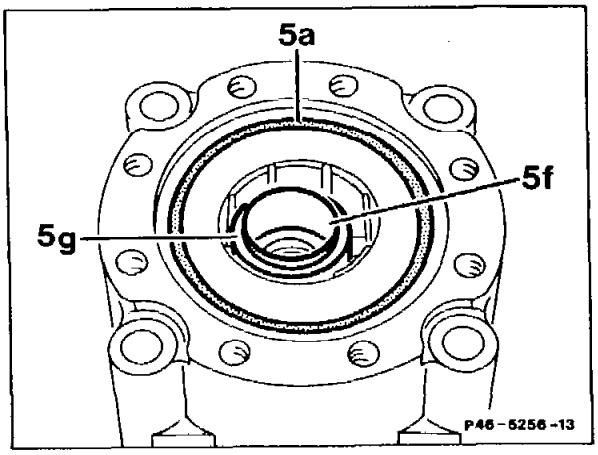

30 Push drive shaft (11) through radial seal ring (4d) in bearing flange cap (4a).

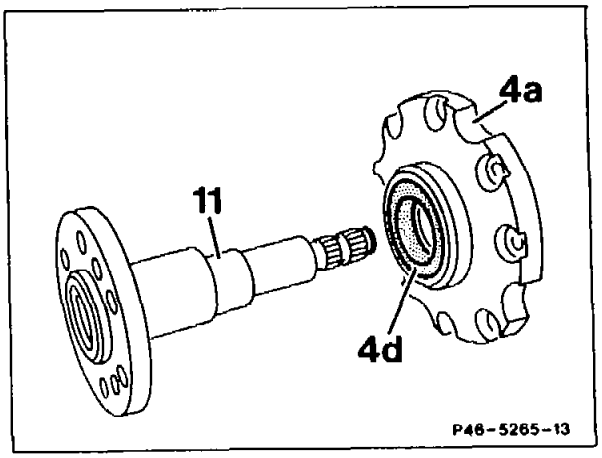

31 Insert drive shaft (11) with bearing flange cap (4a) into pump housing (2a). At the same time turn shaft carefully until the eccentric (arrow) of the drive shaft can be pushed into the bearing sleeve (5f).

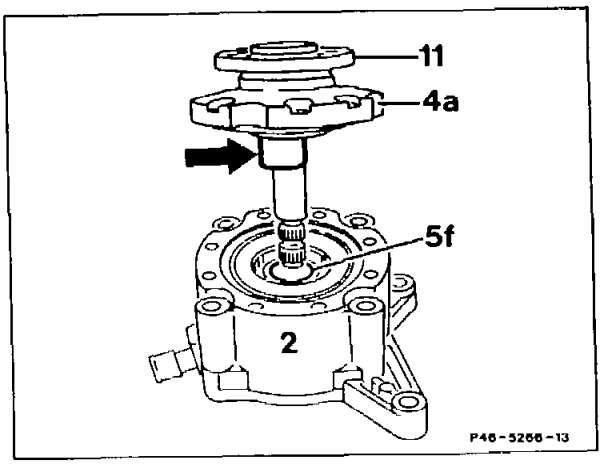

32 Fasten bearing flange cap (4a) with 8 screws M6 (4c).
Tightening torque: 10 Nm.

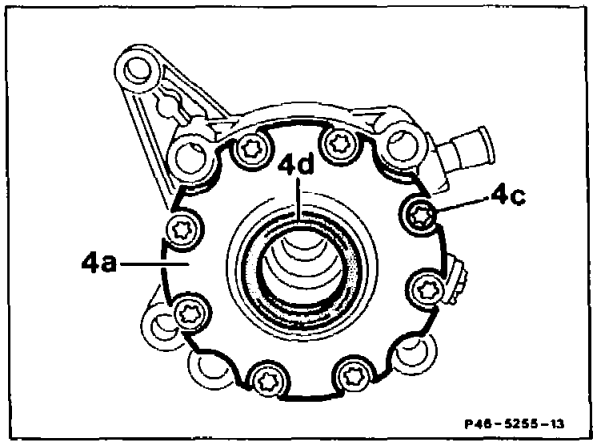

33 Push rotor onto the drive shaft so that the chamfer on the inside diameter (arrow) points towards bearing flange cap (4a).

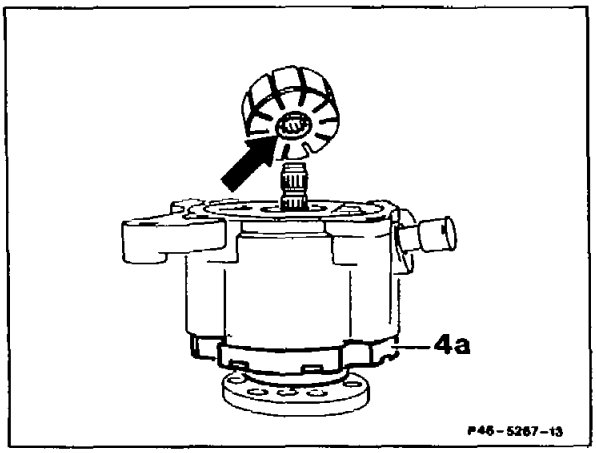

34 Mount new locking ring (11a). The locking ring must seat correctly in the groove (arrow) of the drive shaft.

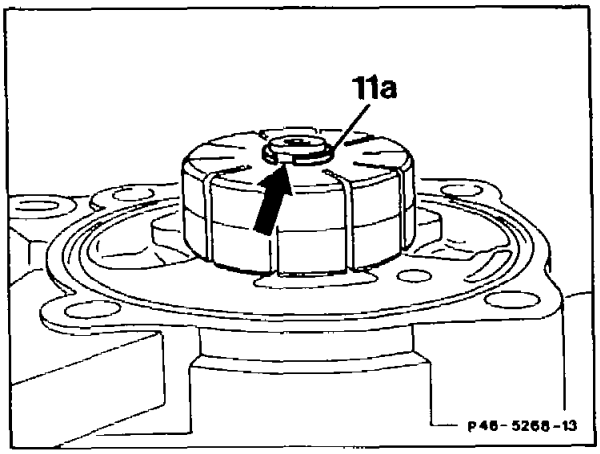

35 Insert vanes (7a, 10 vanes) in the rotor (7). Insert vanes with the rounded, metallic glossy sides towards the cam insert in the rotor.

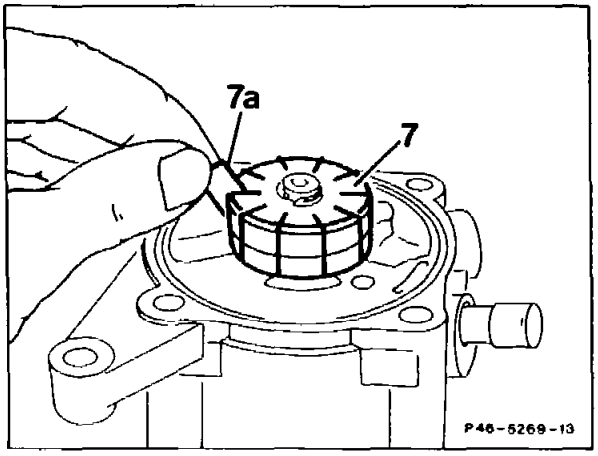

36 Insert straight pins (6a) with the punched end (arrow) in the bores of the cam insert (6) so that they project on both sides of the cam insert.

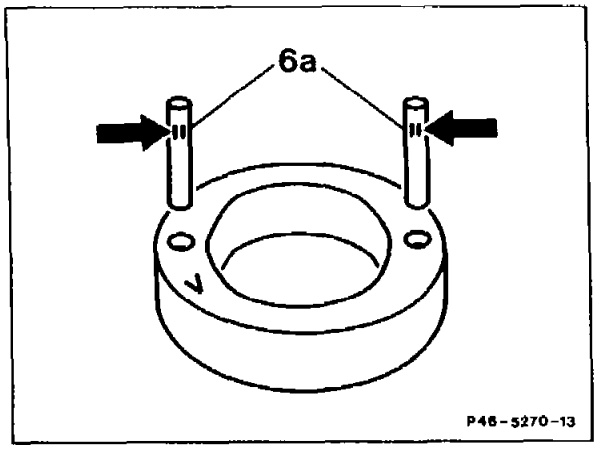

37 Insert cam insert (6) with direction of rotation arrow upwards on the bearing flange (4). At the same time the straight pins (6a) must be above the centering bores (arrow).

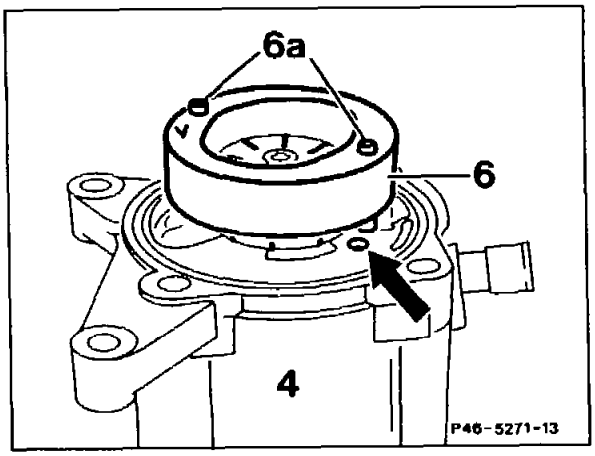

38 Insert seal (8a) and shaped wedge (8b) in pressure plate (8).
Mount pressure plate (8) with the ground surface towards the cam insert.
Insert O-ring (4h) in bearing flange (4).

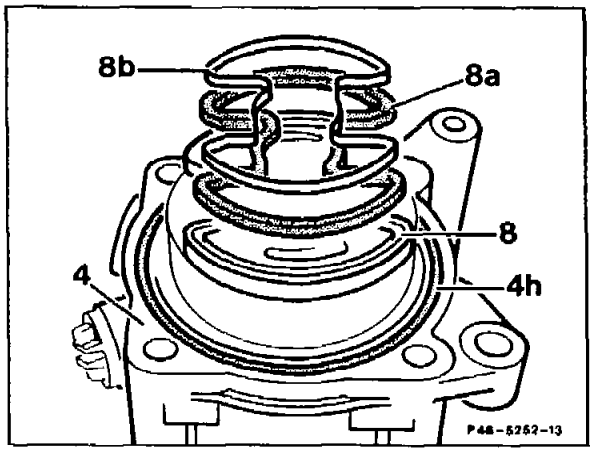

39 Insert bearing flange (4) in pump housing (2) and fasten with 4 bolts M8 (4b).
Tightening torque 25 Nm.

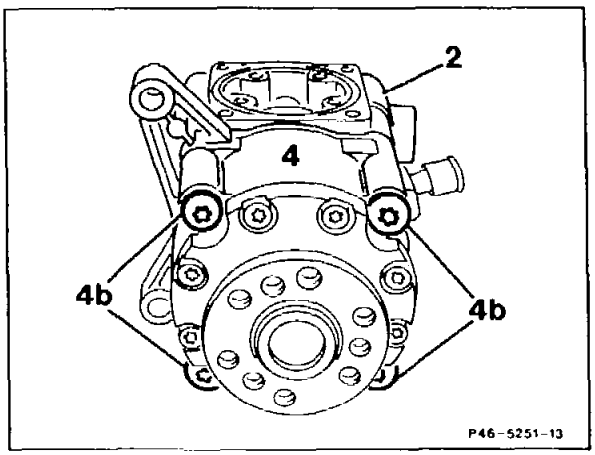

Note models 129.066/067, 140.04/050/051
Insert O-ring (2g) mount end cover (2k) and tighten with four bolts (arrow).
Tightening torque: 8 Nm

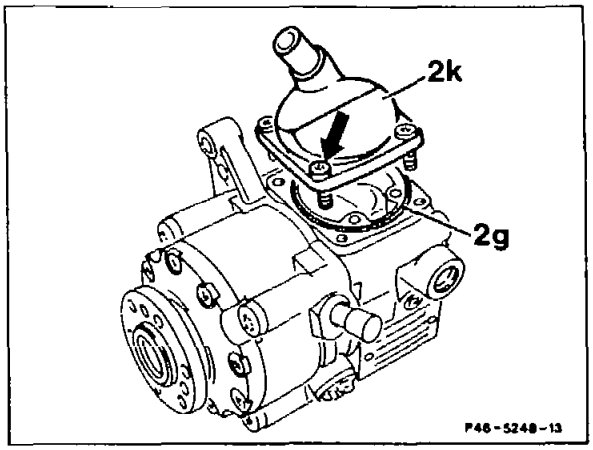

Screw tandem pump (1) onto support (1a) with bolts (46). Screw on oil hose (arrow).
Work step number 40 is omitted.

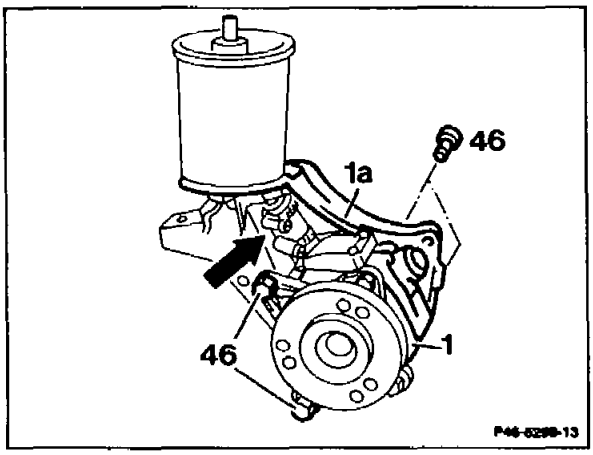

Note models 129.076, 140.056/057
Insert O-ring (2g), screw on oil reservoir (35) with bolts (35a).
Tightening torque: 8 Nm
Work step number 40 is omitted.

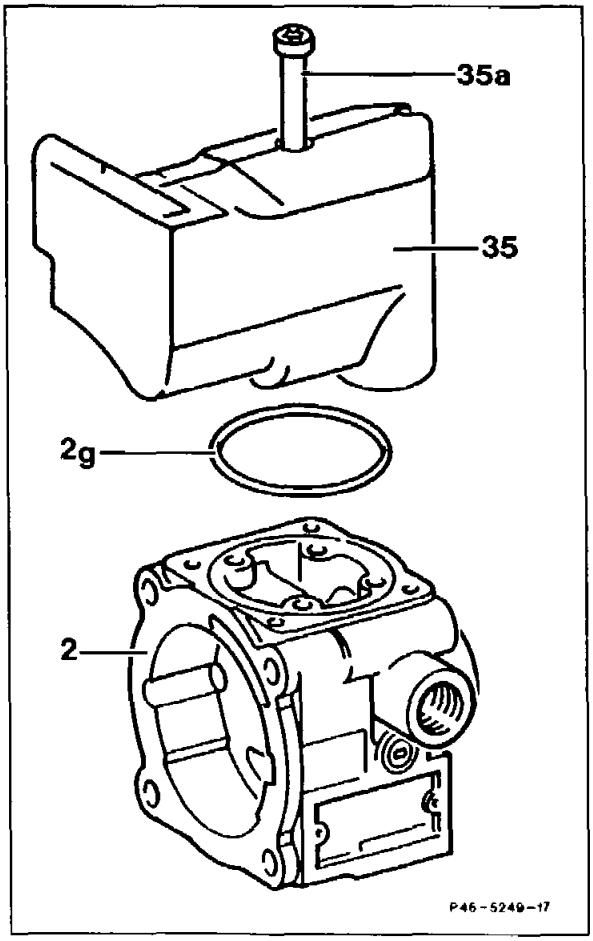

40 Insert O-ring (2g), mount reservoir (35) on pump housing and screw on with bolts (35a, 4 bolts).
Tightening torque: 8 Nm
Insert filter package (35h) and spring (35g), compress slightly and tighten with new self-locking nut (35e).
Mount end cover (35d) and screw on bleed cap (35c).

After installing the tandem pump (operation no. 46–0710), fill or bleed systems (40–0715).
Check tandem pump for operation and leaks, connect pressure gauge if required and check pump pressure (operation no. 46–3070).

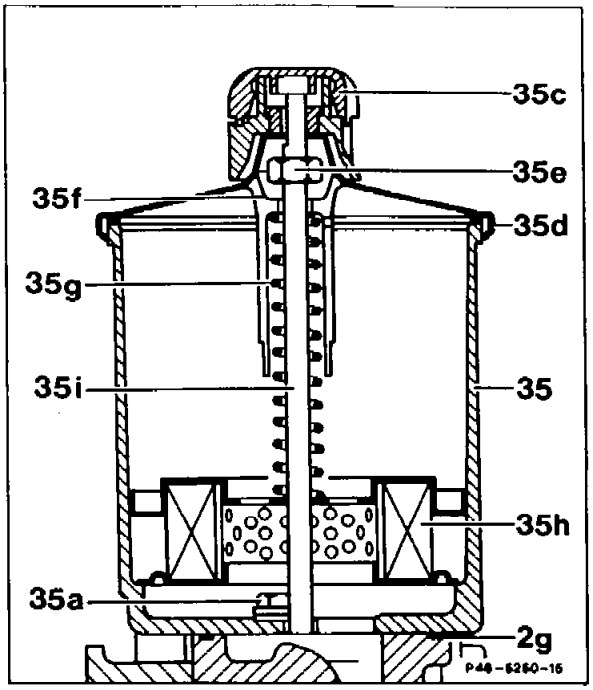

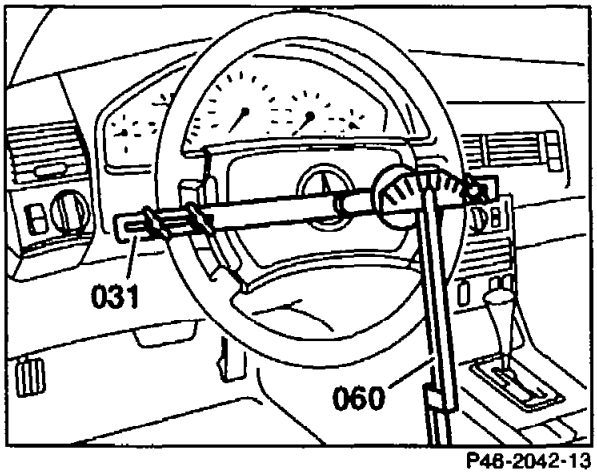

P46-2042-13

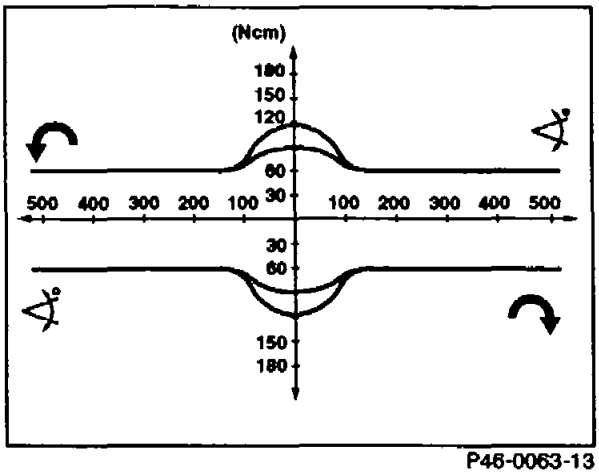

P46-0063-13

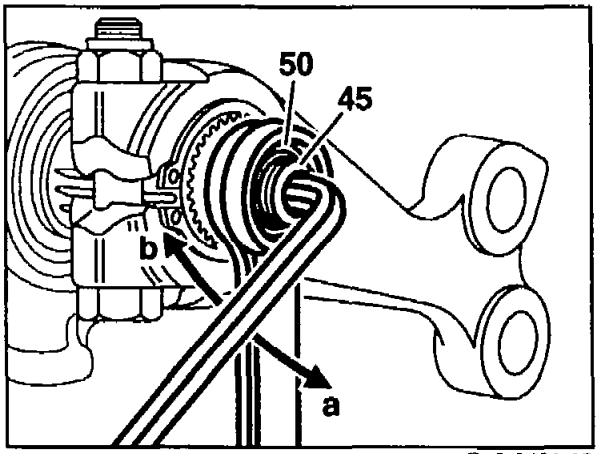

P46-2564-13

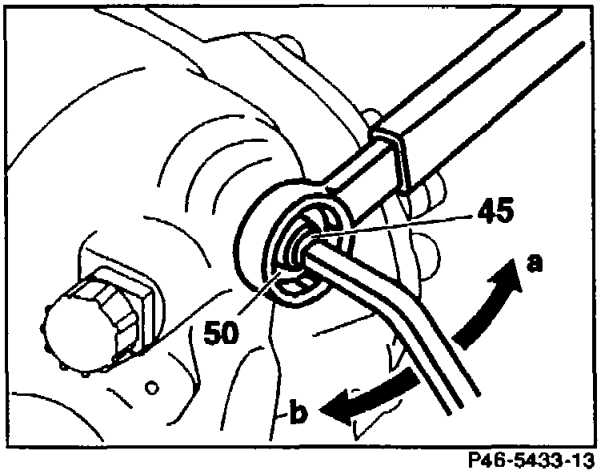

P46-5433-13

Tie rod and drag link	Disassemble and assemble on pitman arm (46-6177, 46-7007).
Support (031) and torque wrench (060)	Fix to steering wheel, remove
Friction torque of steering gear	Determine by slowly turning the steering wheel from lock to lock several times
Friction torque of steering gear	Adjust, by slackening lock nut (50) and turning adjusting screw (45) 1/4 turn in stages direction a = less play = increased friction torque direction b = more play = reduced friction torque
	Tighten lock nut (50), 60 Nm.

Friction torque of steering gear . . . . . Check again after tightening the lock nut (50) and repeat adjustment, if necessary.

Adjusting wrench on vehicles with diesel engines 123 589 01 09 00.

Adjusting wrench on vehicles with gasoline engines 123 589 01 10 00, 123 589 01 03 00.

Set value	(Ncm)	
Total friction torque of steering gear in center position	New steering	110–160
	Used steering	100–130 [1])

[1]) On vehicles with airbag 110-140 (without contact spiral)

Special tools

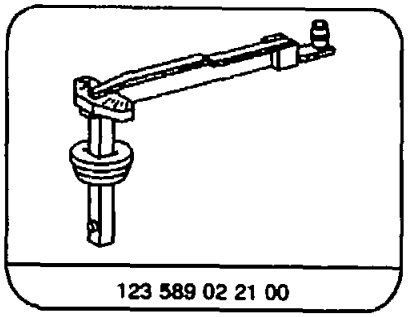

123 589 02 21 00

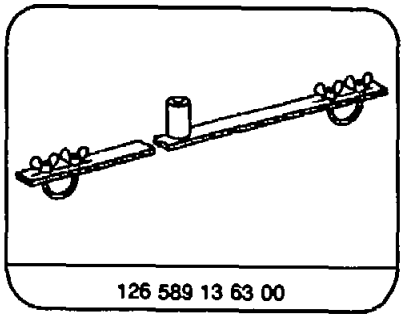

126 589 13 63 00

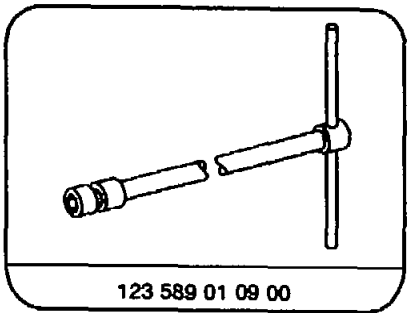

123 589 01 09 00

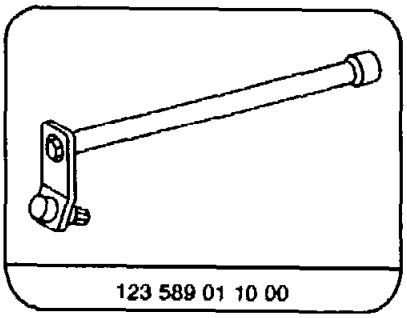

123 589 01 10 00

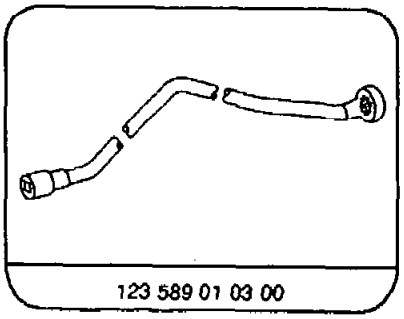

123 589 01 03 00

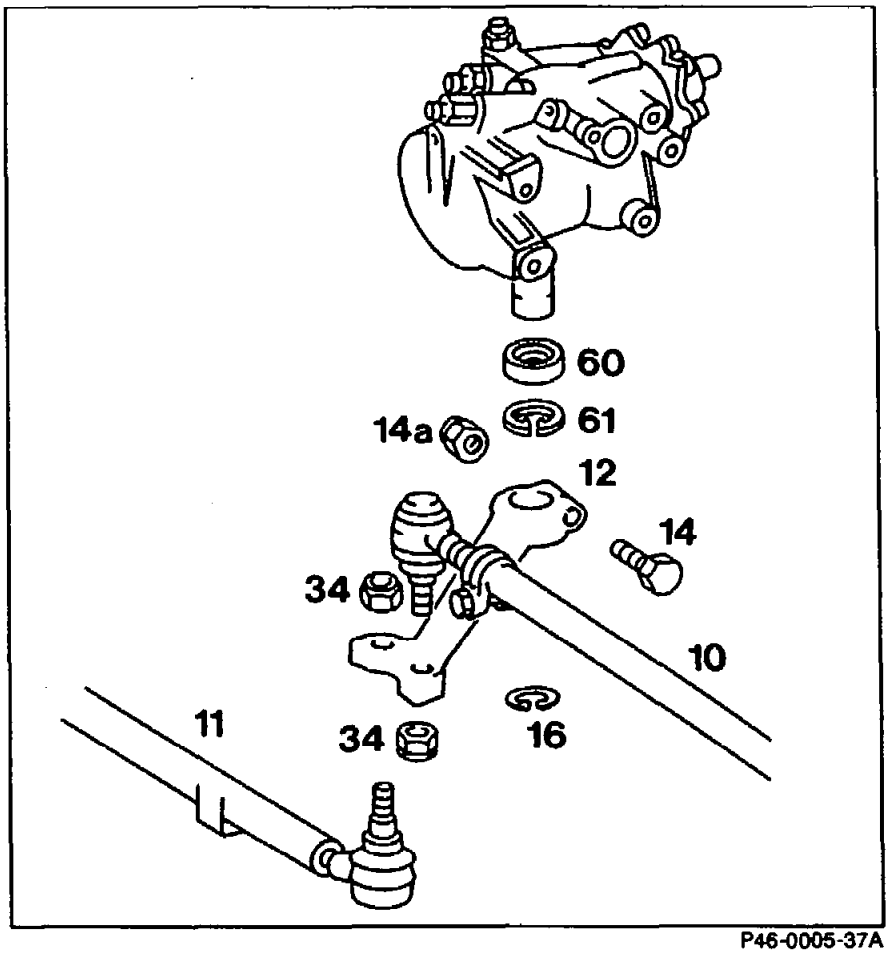

P46-0005-37A

Distance "a"	Determine between pitman arm (12) and steering gear (1) using caliper gauge and note (number 1).
Locking ring (16)	Detach, attach, replace if necessary (number 2).
Hexagon nut (14a)	Unscrew, screw on and replace. Remove, install hexagon bolt (14), 55 Nm (number 3).
Pitman arm (12)	Remove, push on. Clean shaft spline and coat shaft spline with Loctite 270. Push on pitman arm (12) to the dimension "a" measured in number 1 (number 4).

Circlip (60)	Remove, install (number 5).
Sealing ring (61)	Press out, replace and press in. Use alignment tool 140 589 01 15 00 (number 5).
Steering gear (1)	Fill, bleed and check for leaks (46–4080).

Special tools

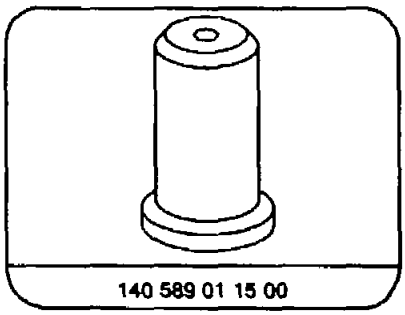
140 589 01 15 00

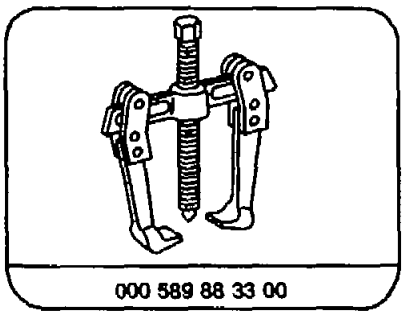
000 589 88 33 00

Removal and installation

1 Using a caliper gauge, measure and note distance "a" between pitman arm (12) and steering gear cover (51).

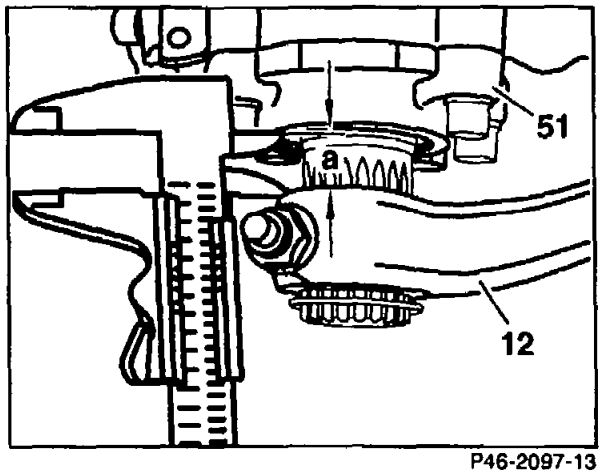

P46-2097-13

2 Remove and replace locking ring (16).

3 Unscrew hexagon nut (14a), and remove hexagon bolt (14).

Installation note

Replace hexagon nut (14a).
Tightening torque 55 Nm.

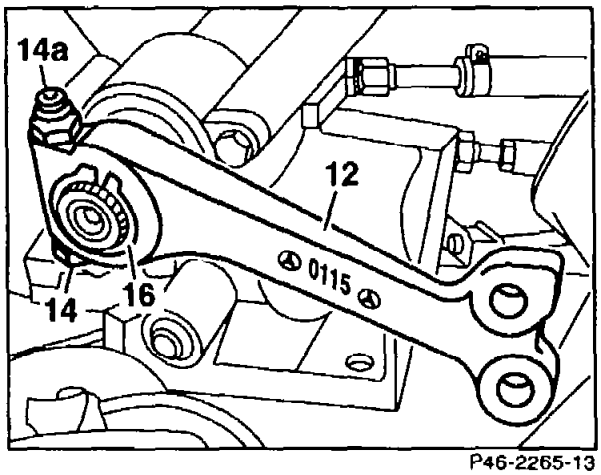

P46-2265-13

4 Remove pitman arm (12) from pitman arm shaft (43).

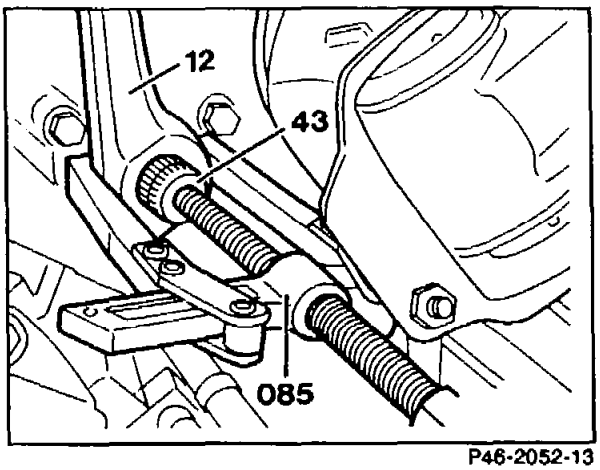

P46-2052-13

Installation note
The shaft splines on the pitman arm shaft and on the pitman arm must be free of oil and grease.

Coat shaft spline of pitman arm with Loctite 270 and push pitman arm on to the pitman arm shaft to the dimension "a" measured in number 1.

⚠
The pitman arm cannot be checked using normal workshop equipment. The steering gear is to be replaced **in cases of doubt**, particularly after accidents.

Replace sealing ring
5 Remove circlip. Press sealing ring (61) out using screwdriver. Take care not to damage the pitman arm shaft.

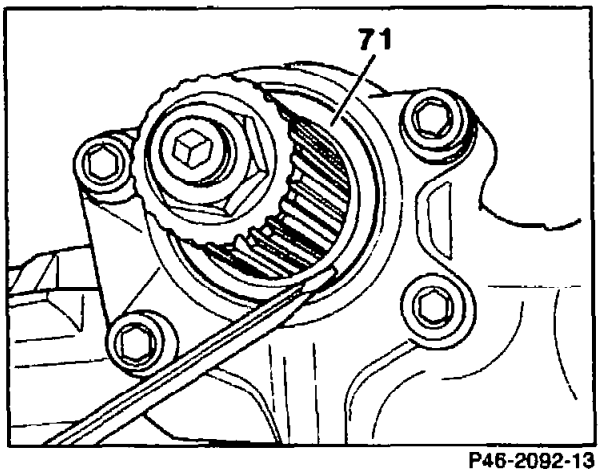

P46-2092-13

Installation note
Press new sealing ring (61) in up to the stop in the steering gear cover using alignment tool (090) 140 589 01 15 00. Do **not** damage the sealing lips when pushing the sealing ring over the shaft spline. Insert circlip.

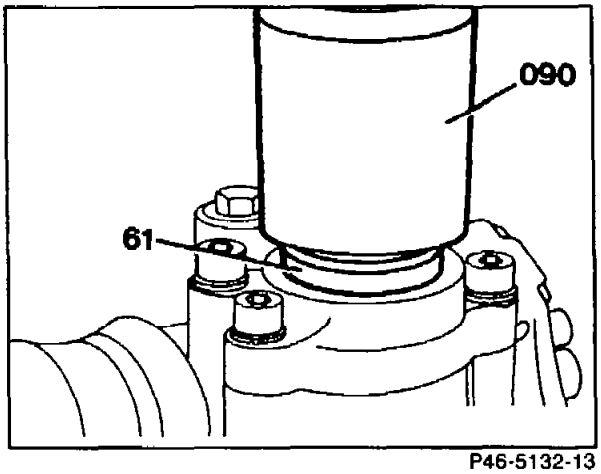

P46-5132-13

6 Fill and bleed steering gear, check for leaks (46-4080).

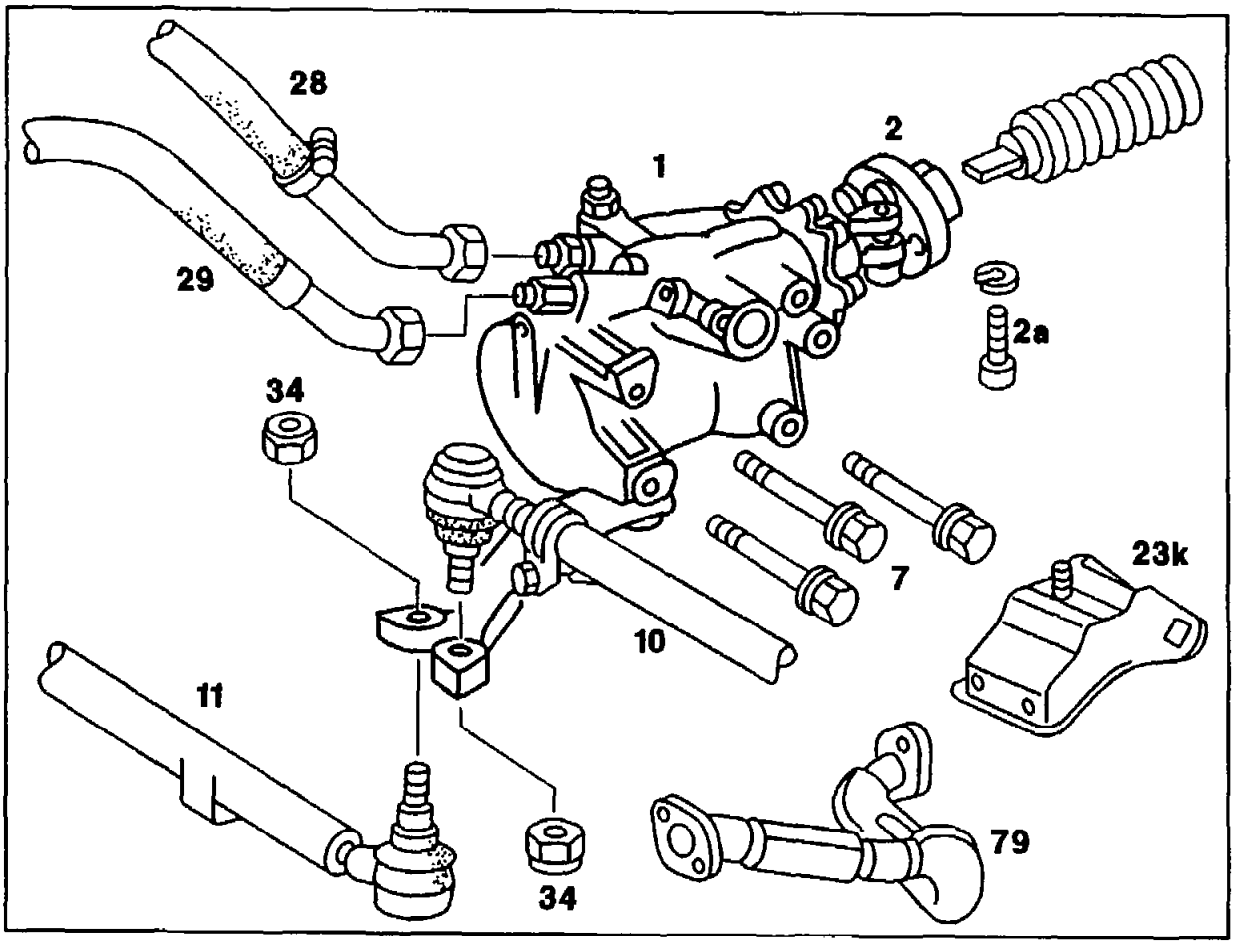

P46-5522-57

⚠

Model 124 (except for 4MATIC, RHS) with contact spiral as of July 1993 ..... The steering wheel must not be turned when the steering gear is removed or the steering coupling is detached, otherwise the contact spiral will be damaged beyond repair.

Power steering pump ..... Extract oil with extraction device 112 589 00 72 00.

Tie rod and drag link (10, 11) ..... Detach, attach at the pitman arm (46-6177/7007), replace nuts (34).

Model 124.034/036

Exhaust crossover pipe (79) and heat shield (23k) ..... Remove, install.

High-pressure expanding hose (29)	Unscrew, screw on, 25-30 Nm.
Return line (28)	Unscrew, screw on, 35-40 Nm.
Bolt (2a)	Unscrew, screw on, replace at the steering coupling (2). **Note:** With the electrically adjustable jacket tube, this is to be extended fully before pushing in the steering coupling.
Stretch bolts (7)	Unscrew, screw in and replace 70-80 Nm.
Steering gear (1)	Remove. Before installing, turn steering gear and steering wheel into the center position (numbers 8 and 9).
After installing the steering gear	Fill and bleed power steering pump (46-4080).
Steering gear (1)	Check for function and leaks.

Types of oil, filling quantities

Steering gear oil part no. 000 989 88 03	Refer to Specifications for Service Products, sheet 236.3.

Special tools

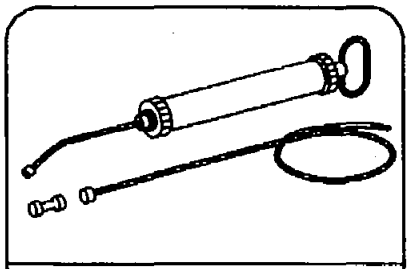

112 589 00 72 00

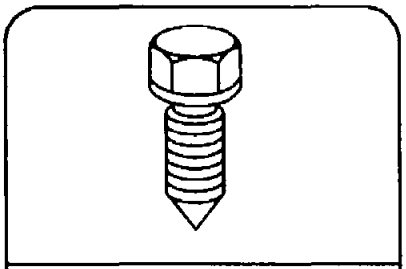

201 589 06 21 00

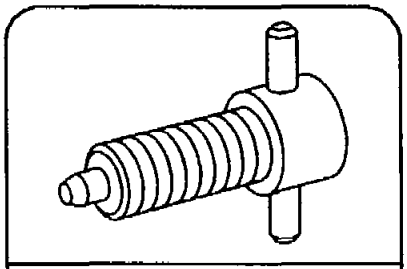

201 589 08 21 00

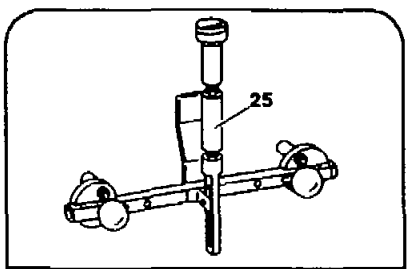

129 589 01 21 00

Removal

1 Remove cap from supply tank of power steering pump (30) and extract oil with extraction device 112 589 00 72 00.

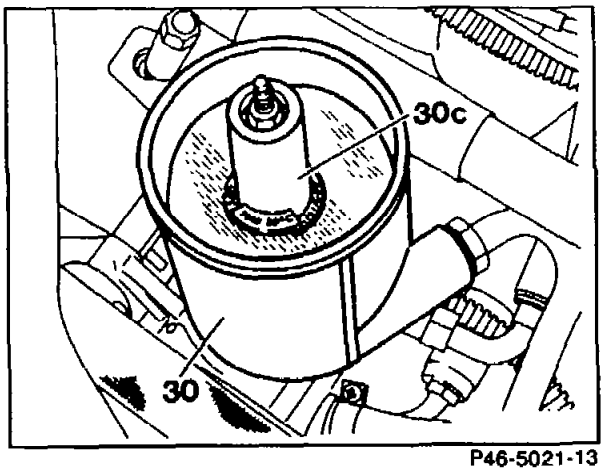

P46-5021-13

2 Detach tie rod and drag link at pitman arm (46-7007 or 46-6177).

3 On models 124.034/036, remove exhaust crossover pipe (79) and

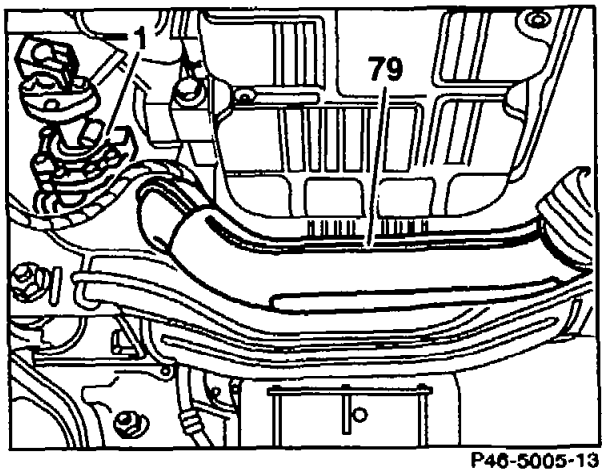

P46-5005-13

shield (23k).

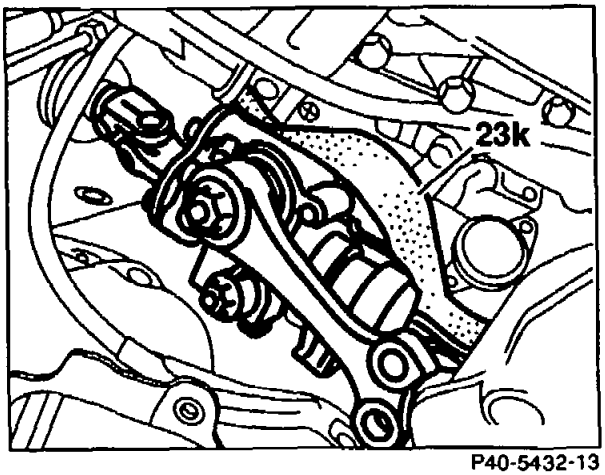

P40-5432-13

4 Unscrew high-pressure expanding hose and return line (28) at connector, seal pipe connections on steering gear (1) with plugs.

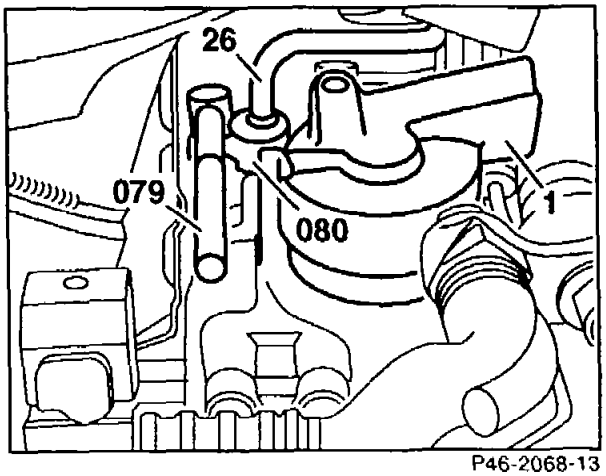

P46-2068-13

⚠

On model 124 (except for right-hand steering vehicles and 4MATIC), as of 07/93 with contact spiral, the steering wheel must not be turned when the steering gear is removed or the steering coupling is detached, otherwise the contact spiral will be damaged beyond repair.

5 Detach bolt (2a) of the steering coupling.

- **Model 201 steering gear - 1st version (up to 04/84)**
  Unscrew bolt (2a) from the lower steering shaft (2).**The lower steering shaft must not be moved upwards.** The steering gear is to be removed forwards.

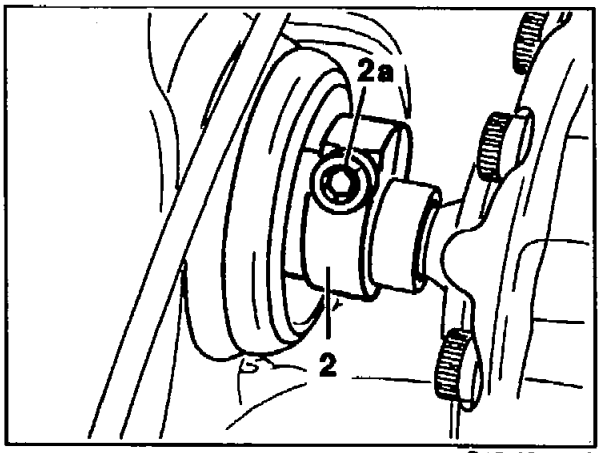

P46-5375-13

- **Model 124 and Model 201 with 2nd version of steering gear (as of 04/84)**
  Unscrew upper bolts (2a) from the steering coupling (2).

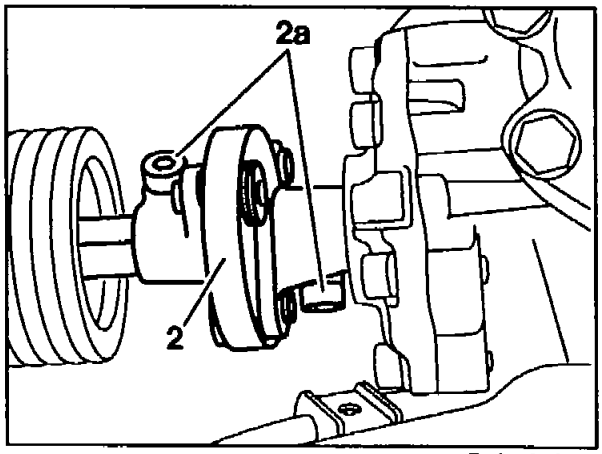

P46-5376-13

Note

- With the electrically adjustable jacket tube, detach steering coupling at steering gear and push back with the steering shaft.
- Otherwise always leave the steering coupling on the steering gear as the steering gear center position is clearly specified by the two flats on the steering shaft.
- The steering coupling is mounted on the steering gear on new steering gears.

6 Unscrew and replace stretch bolts (7) on frame floor.

7 Remove steering gear.
Check steering coupling for wear.

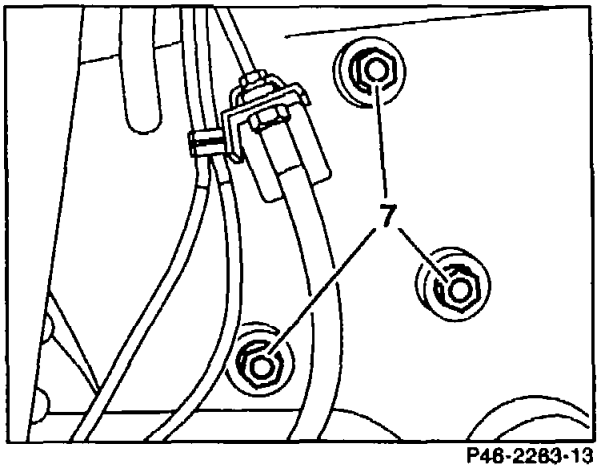

P46-2283-13

Installation

8 Note center position of steering wheel, use adjusting tool (055) for steering wheel 129 589 01 21 00 and adjust steering wheel, if necessary.

⚠
On model 124 (except right-hand steering vehicles and 4MATIC) as of 07/93 with contact spiral, the steering wheel must not be turned when the steering gear is removed or the steering coupling is detached otherwise the contact spiral will be damaged beyond repair.

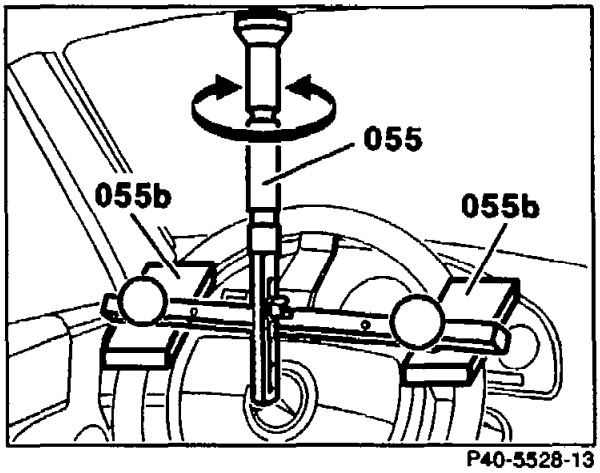

P40-5528-13

9 Turn steering gear into center position.

- **Model 201 with 1st version of steering gear (to 04/84)**
  In the center position, the two flats of the clamping bush (95) must be parallel to the contact surface of the steering gear and the recess (arrow) in the clamping bush for the clamping bolt must be down.
  On manual steering gear 201 589 08 21 00, screw in the center position check bolt 201 589 06 21 00.

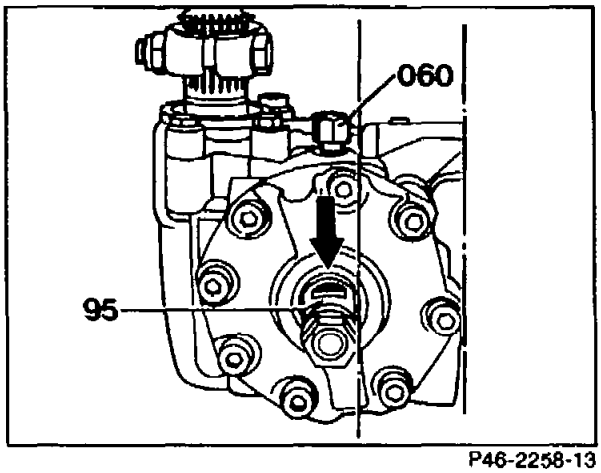

P46-2258-13

– **Models 124 and 201 with 2nd version of steering gear (05/84 up to 01/90)**
Screw center position check bolt (060) 201 589 06 21 00 into the steering gear (1) and fix power piston or steering nut (5). To do this, turn steering worm (3) until the center in the power piston or in the steering nut is exactly under the tapped hole.

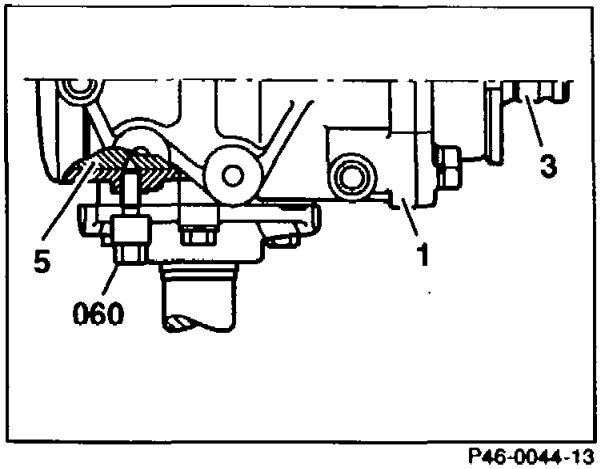

P46-0044-13

⚠
The steering worm or the pitman arm shaft must not be turned when the center position check bolt is installed.

– **Models 124 and 201 with 3rd version of steering gear (as of 01/90)**

- With the steering coupling detached, align the marking line on the steering worm and housing cover.

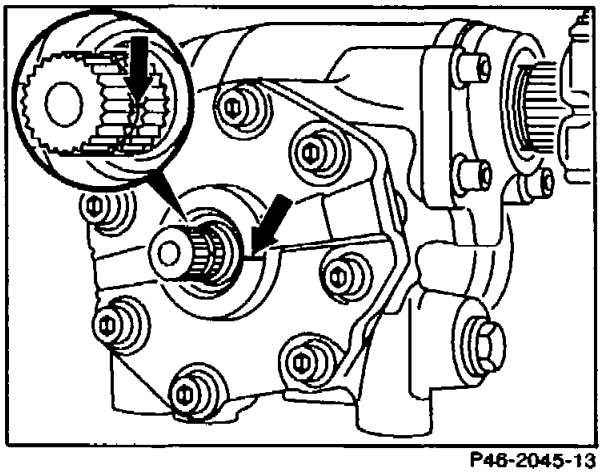
P46-2045-13

- With the steering coupling attached, align steering coupling with engraved marking line with the marking of the steering gear (arrows).

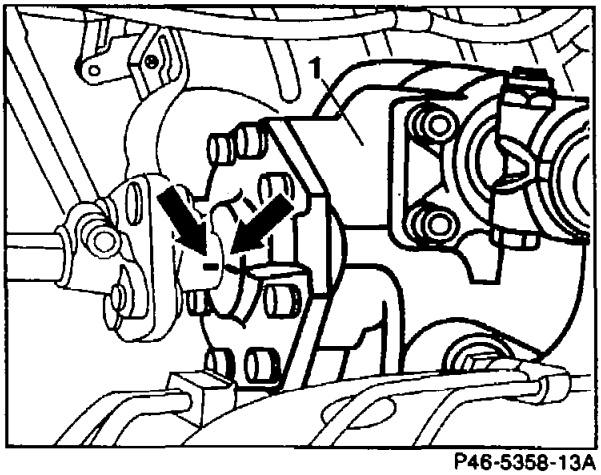

P46-5358-13A

Model 124.034/036
The clamping slot of the universal joint and the marking line (arrow) of the steering gear (1) must be opposite each other (arrows).

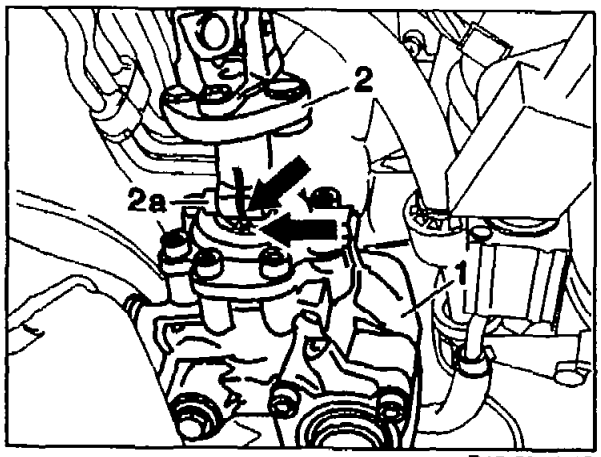

P46-2609-13

10 Push steering gear into the steering shaft and screw onto the frame floor with new stretch bolts (7).

Tightening torques 70-80 Nm

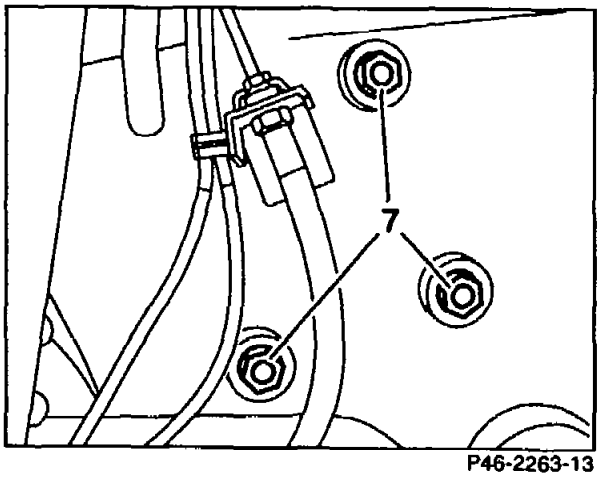

P46-2263-13

Note
With the electrical jacket tube, the steering coupling must be mounted on the steering shaft for the installation of the steering gear.

⚠
Ensure that the connection (arrow) is assembled correctly

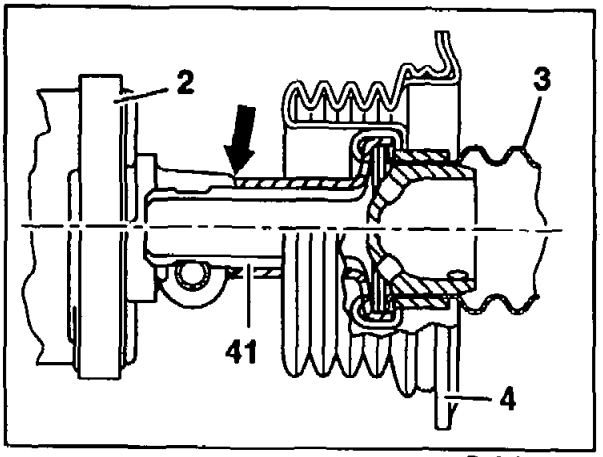

P46-0013-13

11 Screw new bolt (2a) into the steering coupling (2).

Tightening torque

Models 124 (except for 124.034/036), 201	25 Nm
Model 124.034/036	35 Nm

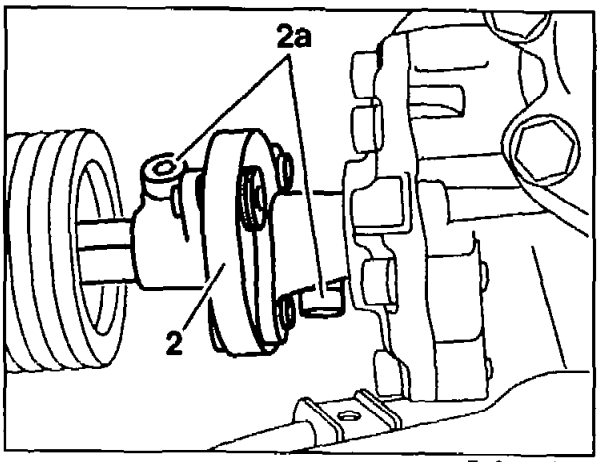

P46-5376-13

12 Unscrew center position check bolt (060) from steering gear (1). Screw screw plug with new sealing ring into the steering gear (1).

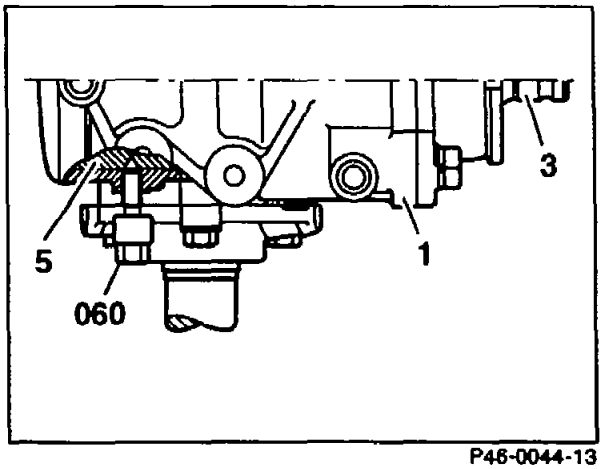

P46-0044-13

13 Remove plug from steering gear. Screw high-pressure expanding hose (29) and return line (28) onto the steering gear (1).

Tightening torque:

High-pressure expanding hose	25–30 Nm
Return line	35–40 Nm

Note
Ensure satisfactory hose routing

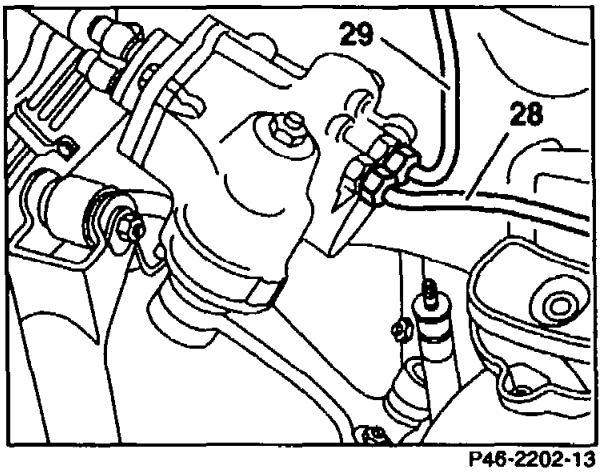

P46-2202-13

14 **On models 124.034/036**
Install heat shield (23k) on the steering coupling and exhaust crossover pipe.

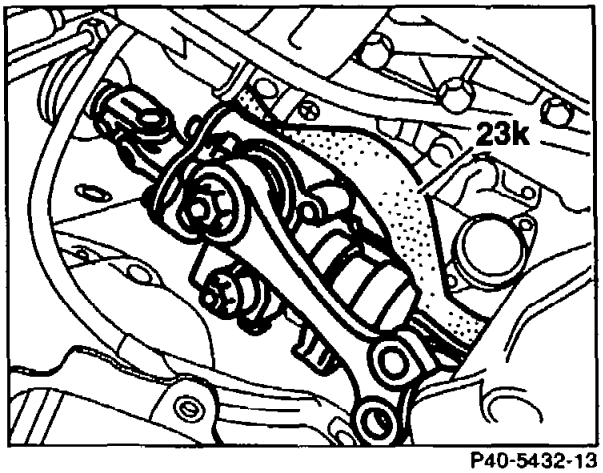

P40-5432-13

15 Install tie rod and drag link on pitman arm with new self-locking hexagon nuts (46-7007 or 46-6177).

16 Fill and bleed power steering pump (46-4080).

17 Check steering gear for function and leaks.

• **Filling**

Before starting the engine, fill the supply tank with the specified steering gear oil up to approx. 10 mm below the upper edge.

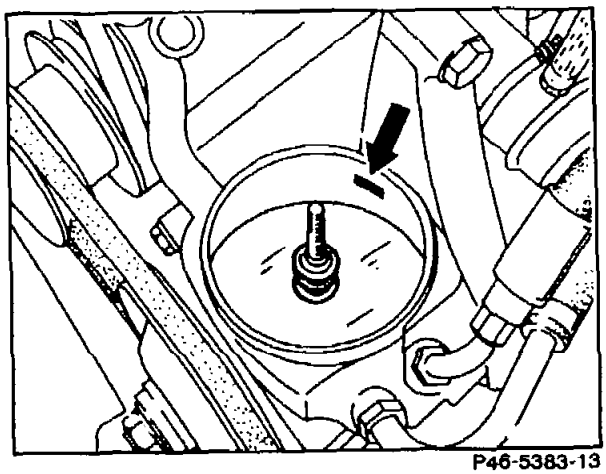

P46-5383-13

Model 201 up to 09/84
Oil level at approx. 20°C
6-8 mm below the marking (arrow)
When the oil is at operating temperature (approx. 80°C), correct oil level up to the marking (arrow)

• **Bleeding**

Start/switch off the engine 2 or 3 times after approx. 1 second, replenishing oil in the meantime.

Under no circumstances must the power steering pump draw in air. To completely bleed the system, turn the steering from lock to lock fully several times.

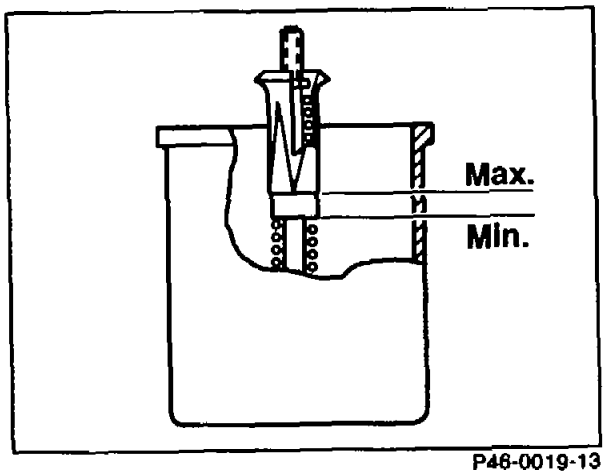

P46-0019-13

Models 124 and 201 up to 01.91
Fill between the min. and max. marking at an oil temperature of 20-50°C.

• **Leak testing**

Check system for leaks. If the fluid level is too low, establish cause and eliminate.

A light oil film on the radial sealing ring or on the housing contact face is due to the design.

• **On vehicles with tandem pump**

Bleed the system separately in each case

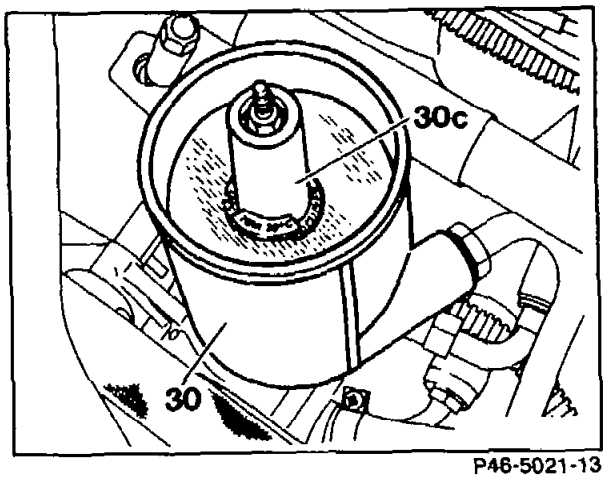

P46-5021-13

Models 124 and 201 as of 02/91
Oil level on the oil level indicator (30c) at approx. 20°C

Types of oil/filling quantities

Steering gear oil	refer to Specifications for Service Products, sheet 236.3 Part no. 000 989 88 03

46–6317 Removing and installing steering idler arm, replacing plain rubber mount

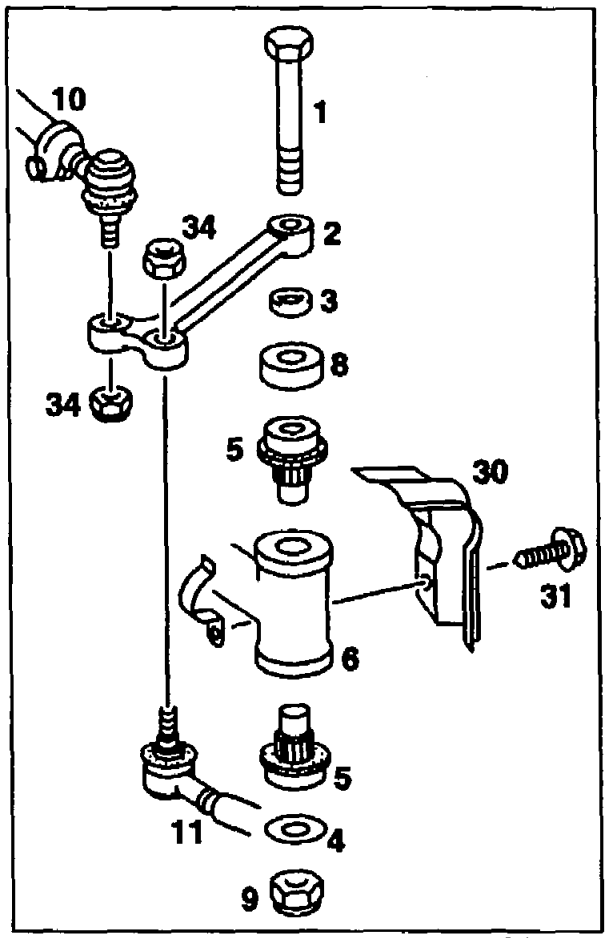

P46-0051-17

Tie rod (10)	Remove, install (46-7007), replace nut (34).
Drag link (11)	Remove, install (46-6177). Replace nut (34).
Heat shield (30)	With bolt (31) Remove, install.
Self-locking nut (9)	Unscrew, screw on and replace, remove sealing washer (4). Model 124 150 Nm Model 201 110 Nm

Bolt (1)	Withdraw. Remove steering idler arm (2), spacer (3) and dust cap (8).
Plain rubber mount (5)	Replace. Extractor 129 589 00 33 00 *or* 201 589 09 33 00. Use pressing-in tool 115 589 08 61 00 or 201 589 08 43 00.

Special tools

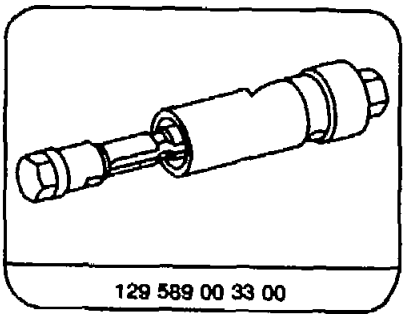

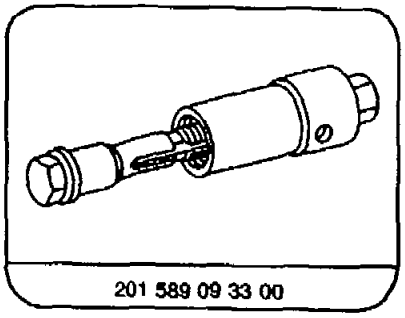

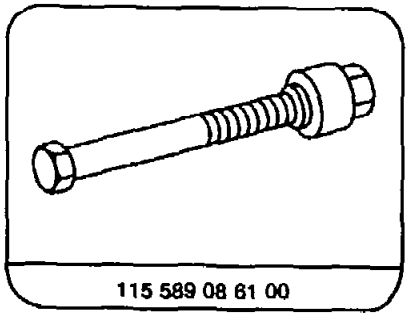

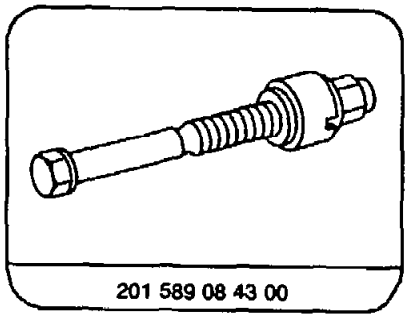

Removal, installation

1 Detach tie rod at steering idler arm (46-7007).

2 Detach drag link at steering idler arm (46-6177).

3 Remove, install heat shield (30).

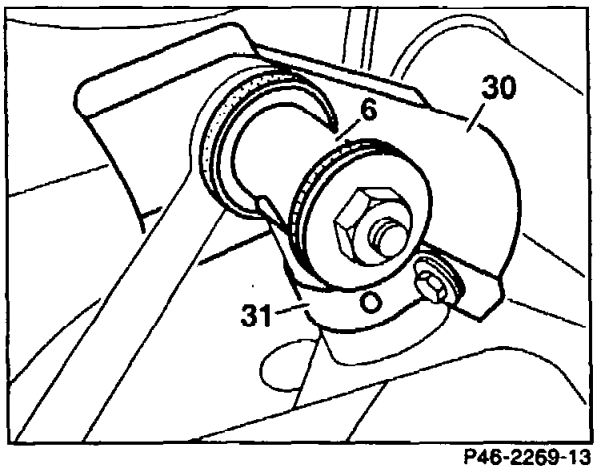

P46-2269-13

4 Unscrew nut from bolt (1), remove sealing washer (4).

Installation note
Replace self-locking nut

Model 124	150 Nm
Model 124 4Matic	180 Nm
Model 201	110 Nm

5 Withdraw bolt (1) and remove steering idler arm (2), spacer (3) and dust cap (8).

5 Plain rubber mount
5a Slide bushing
6 Idler lever mount

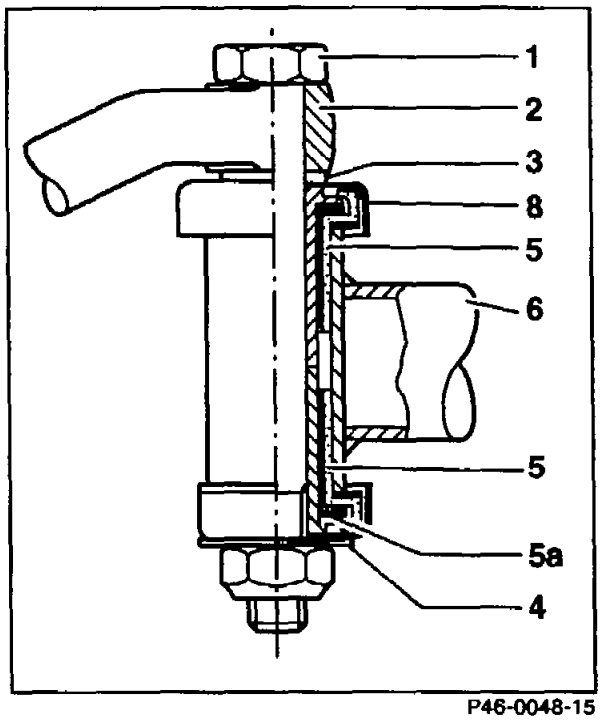

P46-0048-15

6 The steering idler arm cannot be checked. The steering idler arm is to be replaced in cases of doubt.
Note identification number (arrow) (46-0003).

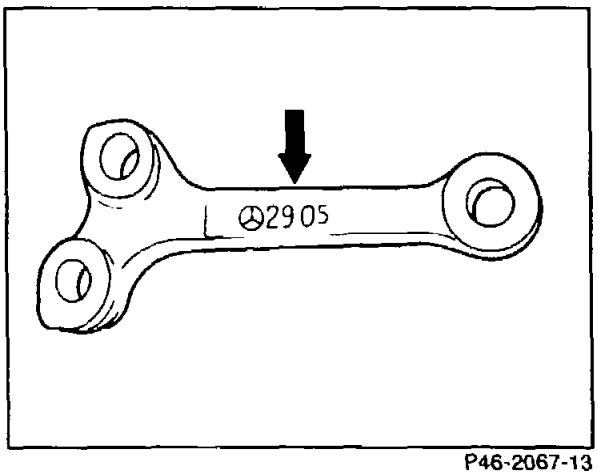

P46-2067-13

Replacement of plain rubber mount

7 Lift sealing lip (5d) and remove slide bushing (5a) from the rubber mount.

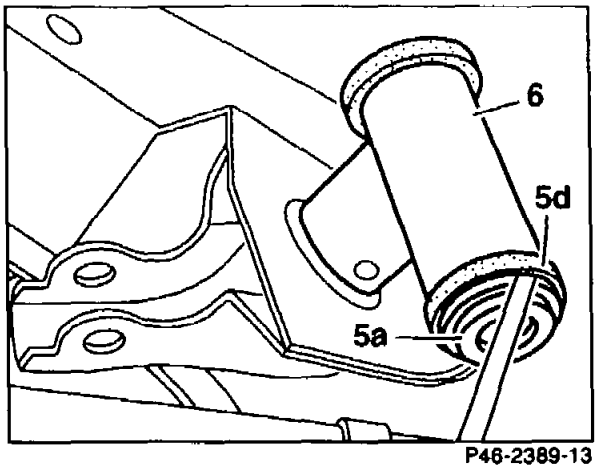

P46-2389-13

8 Using the extractor (061), remove both plain rubber mounts from the idler lever mount (6).

Extractor (061)	
Model 124	129 589 00 33 00,
Model 201	201 589 09 23 00.

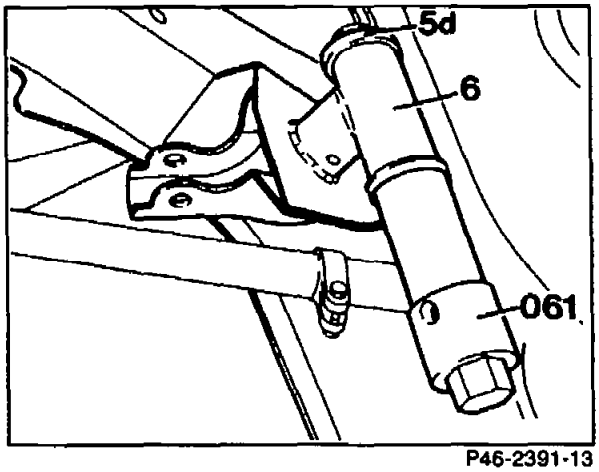

P46-2391-13

Installation note

Using the press-in tool (062), press the plain rubber mount (5) into the idler lever mount (6).

Pressing-in tool (062)	
Model 124	115 589 08 61 00
Model 201	201 589 09 33 00

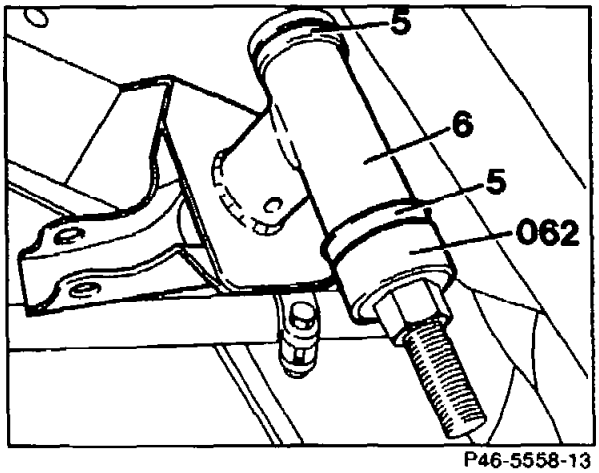

P46-5558-13

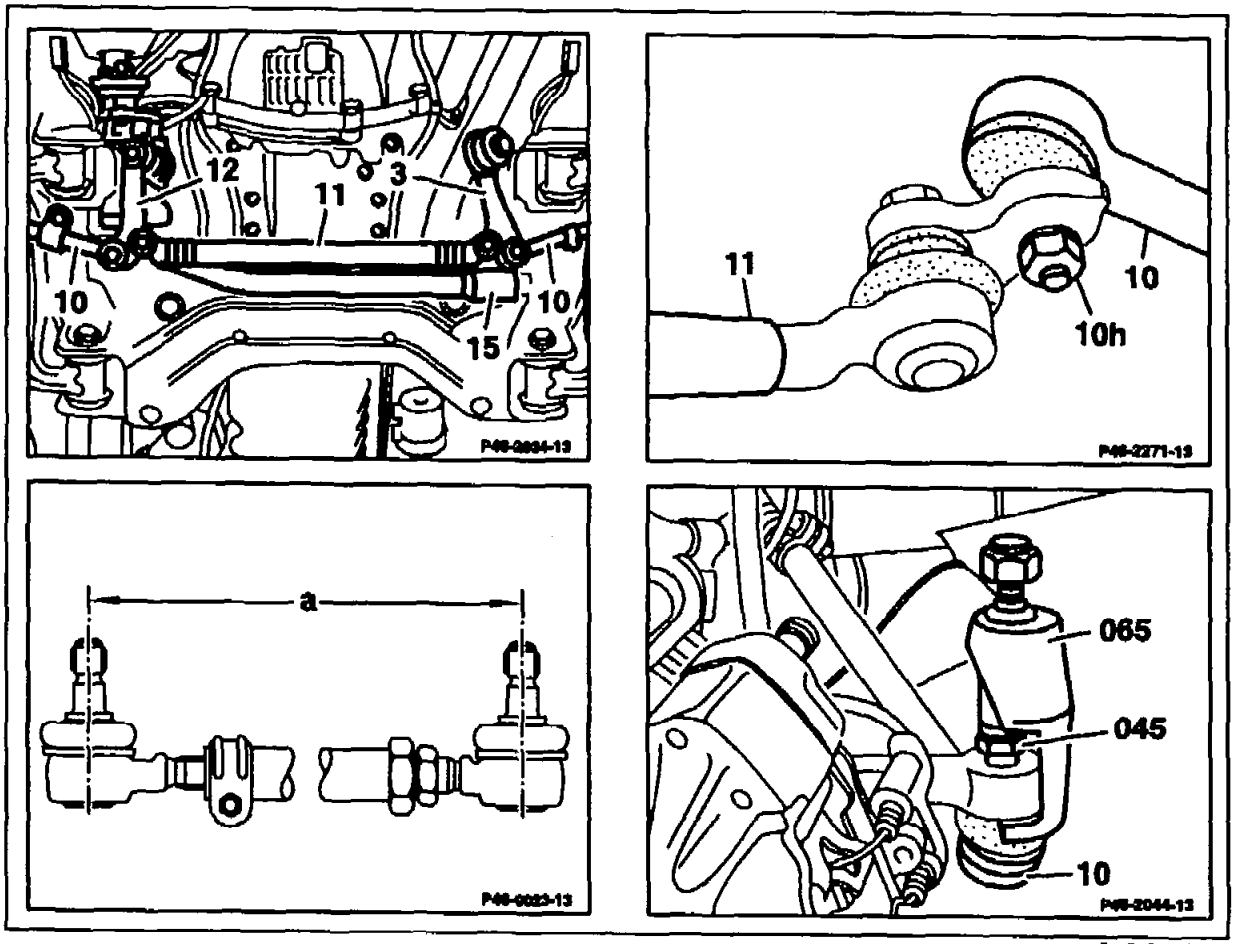

P46-0103-57

Self-locking nut (34)	Unscrew, screw on and replace. M10x1 35 Nm M12x1 50 Nm
Tie rod (10)	Screw on, unscrew thrust piece (045) 201 589 05 63 00 or 129 589 10 63 00 and press off using puller (065) 124 589 03 33 00 or 201 589 14 33 00. When installing, clean grease off tapered connection and push drag link securely into the steering arm.

Joint of tie rod (10)	If there is play or the rubber boot is damaged, replace tie rod. If the rubber boot was damaged when the tie rod was removed, replace rubber boot (46-7202).
Installed position of tie rod	Observe, refer to notes.
Tow-in	Adjust (40-0323).

Special tools

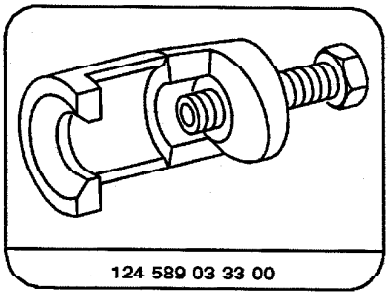

124 589 03 33 00

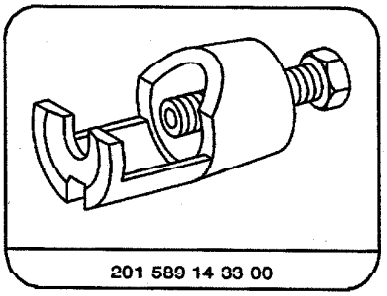

201 589 14 33 00

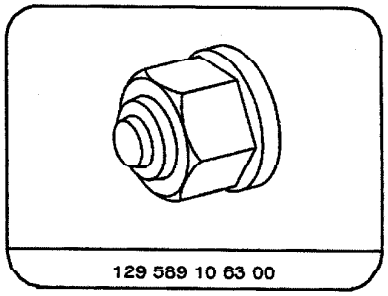

129 589 10 63 00

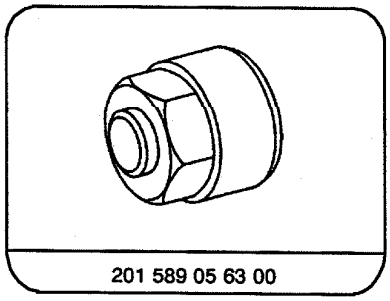

201 589 05 63 00

Notes

The ball joint secured with the tapered clamping ring (10b, 10c) must be fixed to the steering control arm (6) on the steering knuckle side.

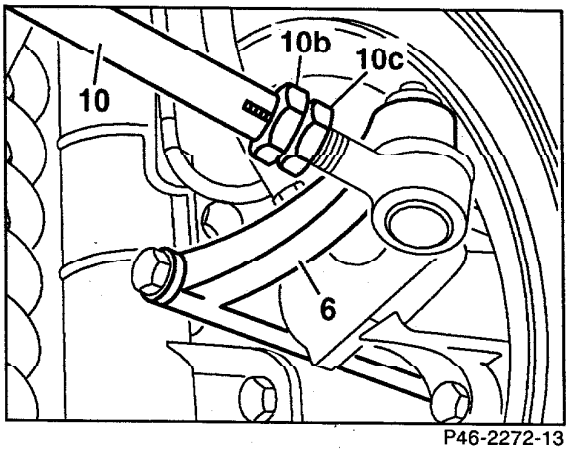

P46-2272-13

Model 124.034/036

When installing the left tie rod, ensure that the short ball housing pivot is secured to the steering control arm.

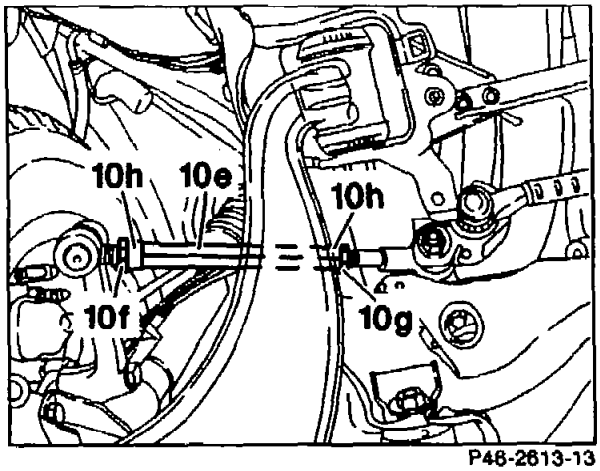

P46-2613-13

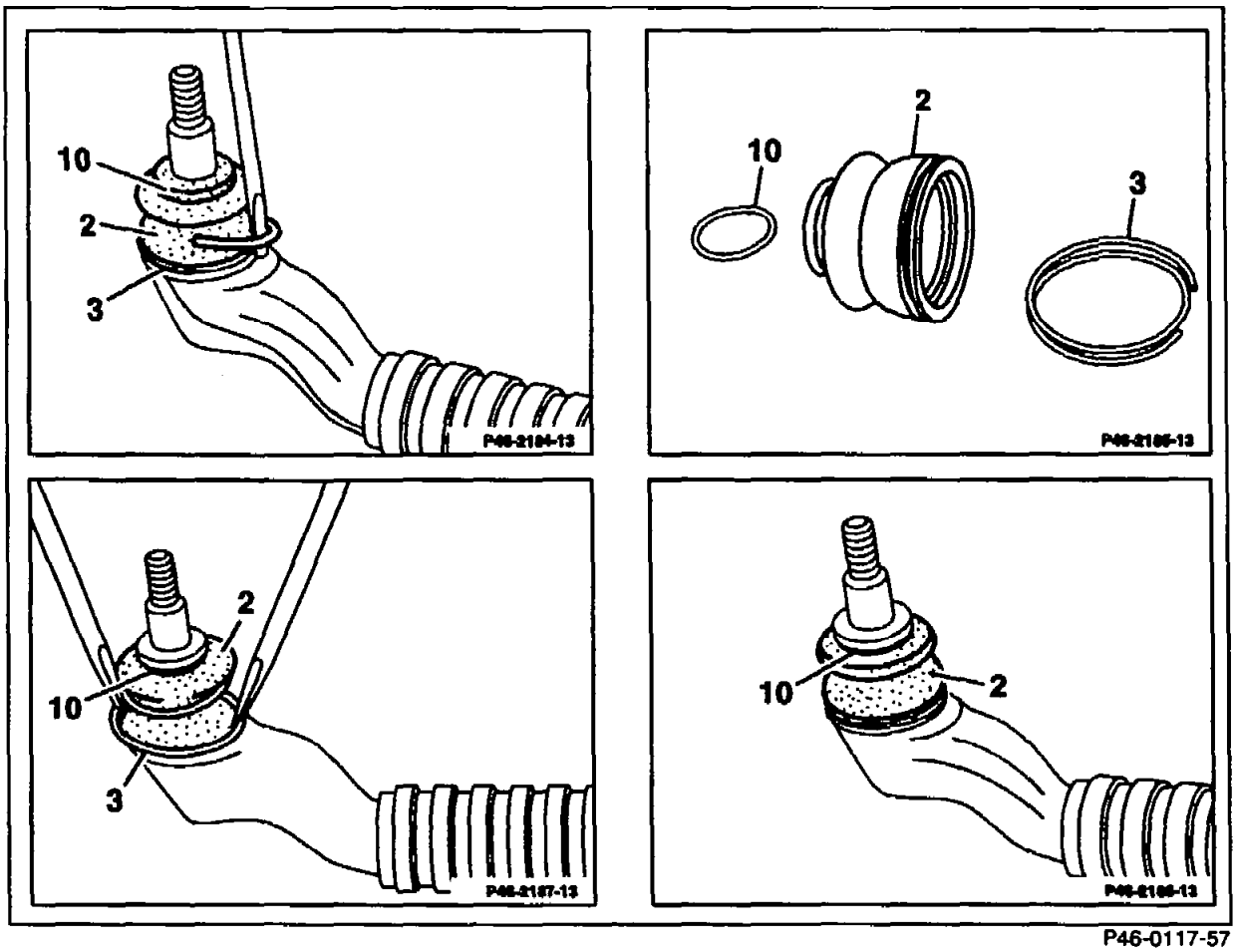

P46-0117-57

Flat wire clamping ring (3)	Remove using a screwdriver.
Rubber boot (2) and round wire clamping ring (10)	Pull off, replace.
Joint	Clean off any dirt and pack with multipurpose grease approx. 3 cm^3.
Round wire clamping ring (10)	install in the new rubber boot (2).
Rubber boot (2)	Push onto the ball pivot. ⚠ The edges of the screwdriver should be rounded-off to prevent cutting the rubber boot when installing the flat wire clamping ring.

Flat wire clamping ring (3)	Carefully install in the rubber boot (2).

Note
After installing the flat wire clamping ring (3), check rubber boot (2) for damage again.

Lubricants

Approved multipurpose greases (NLGI class 2)	refer to Specifications for Service Products, sheet 267

Note
The maintenance-free joints are packed with grease for life. A rubber boot damaged during assembly (2) must be replaced immediately. Carefully check joints from time to time.
If a damaged rubber boot (2) is found on a used joint, the drag link or tie rod must be replaced.

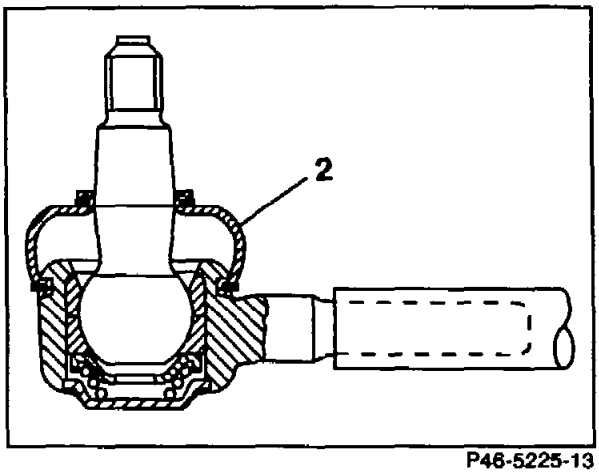

P46-5225-13

Preceding work:
Remove, install steering wheel (46-8240)

A. Steering wheel up to the introduction of contact spiral (06/93)

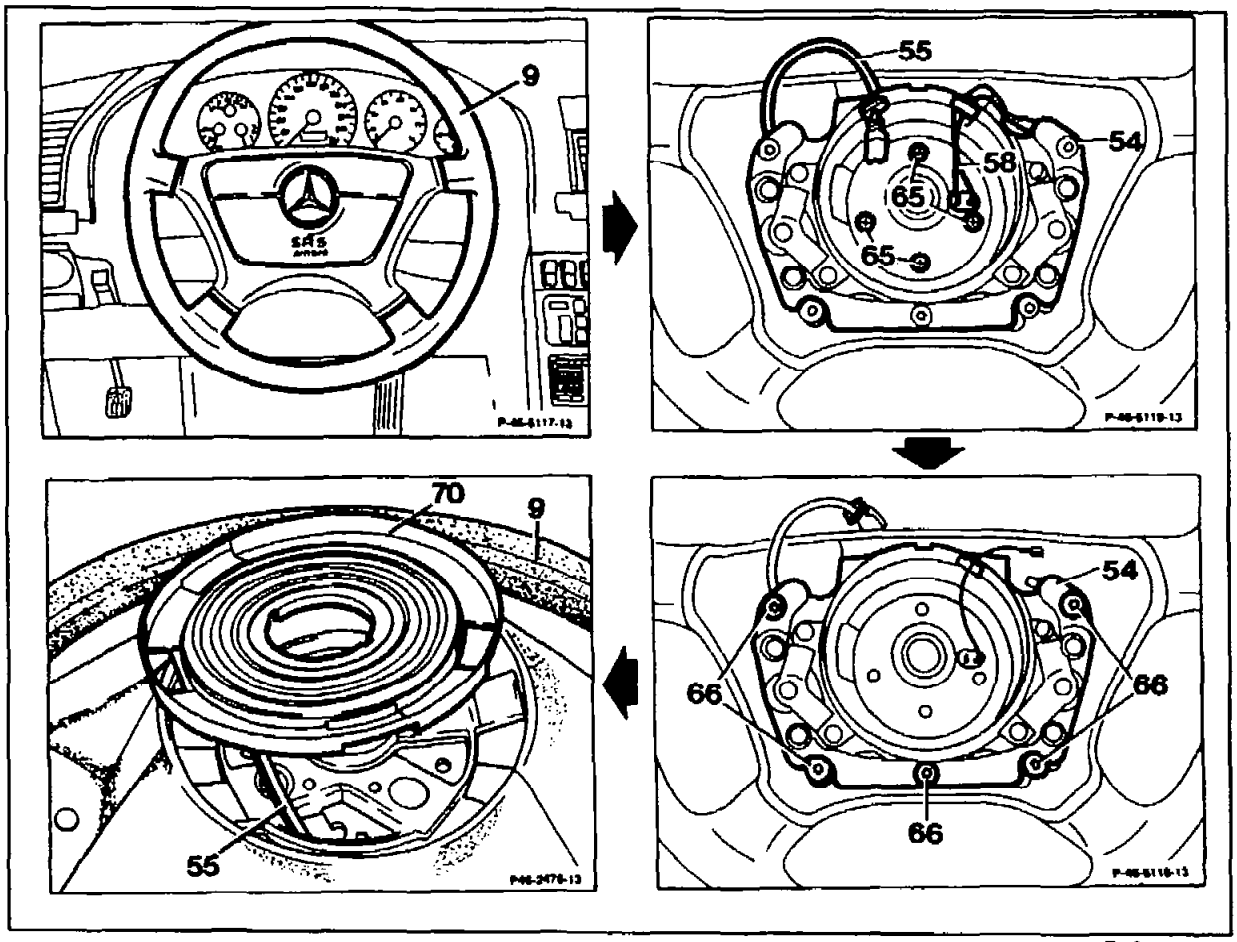

P46-5144-57

Cable (55)	remove, with the rubber sleeve in the impact absorber (54), install
Cables (58)	disconnect, connect and remove from the rubber sleeve in the impact absorber (54), install.
Screws (65)	unscrew, screw in.
On steering wheel version design 124,	unscrew, screw in the 4 outer Torx socket bolts (66) (do not loosen center screw), remove, install impact absorber (54).
Wiper ring (70)	Remove, install at steering wheel.

Note
When replacing the steering wheel it is essential to note which special equipment is fitted:

2 brass contact rings = standard (= horn rings)

4 brass contact rings = airbag

2 brass contact rings + 1 steering angle magnet ring (arrow) = 4MATIC, ADS

4 brass contact rings + 1 steering angle magnet ring (arrow) = airbag, ADS, 4MATIC

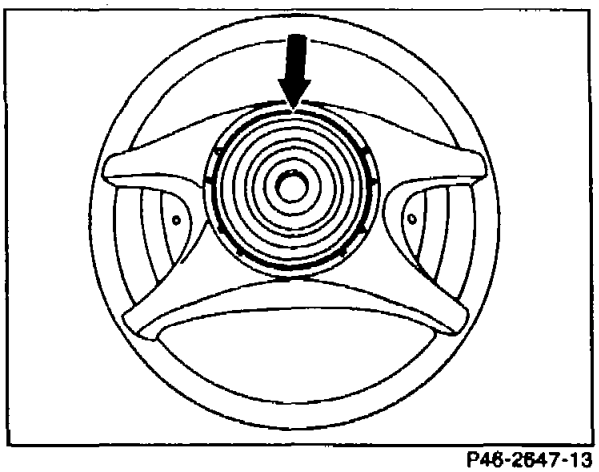

P46-2647-13

B. Steering wheel as of the introduction of contact spiral 07/93 (installation of slip ring)

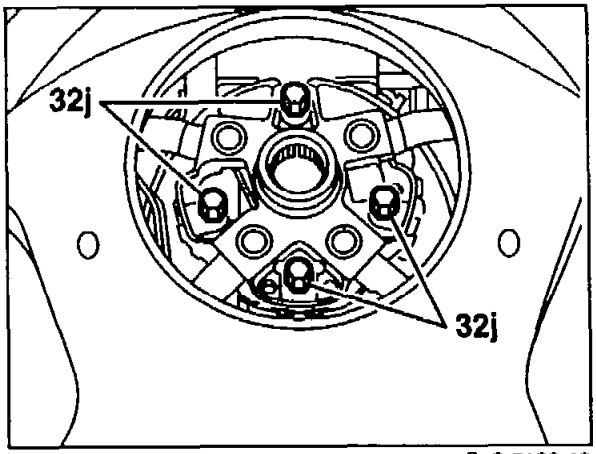

P46-5462-13

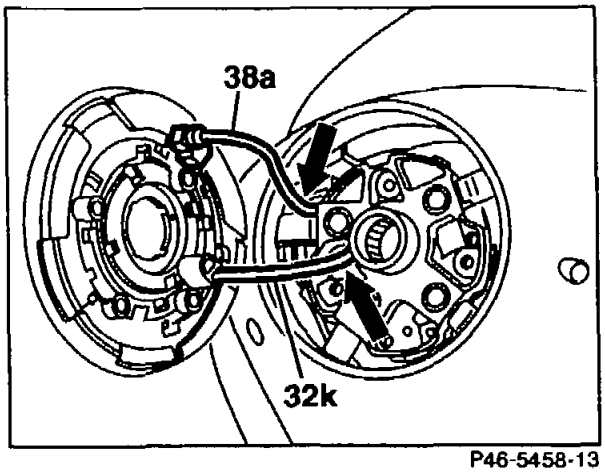

P46-5458-13

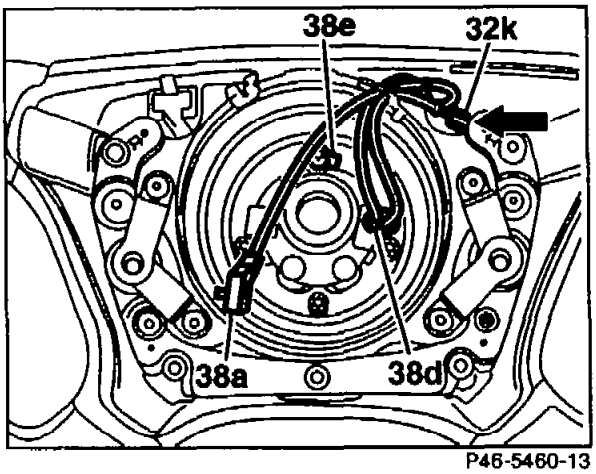

P46-5460-13

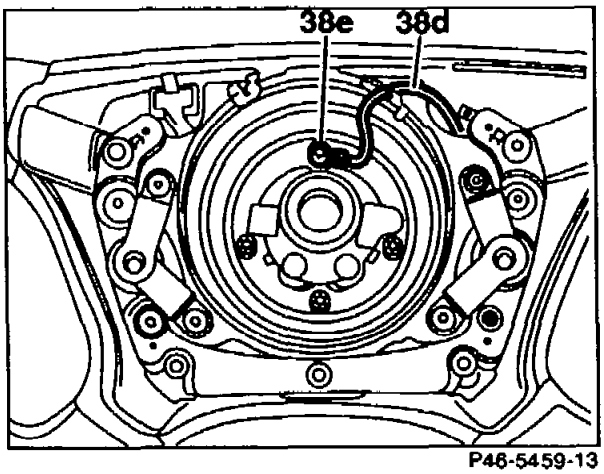

P46-5459-13

Bolts or nuts (32j)	Unscrew, screw on.
Slip ring	Install as follows: – push in cables for airbag squib (38a) and horn (32k) through the recesses in the steering wheel (see arrows) and the grommet in the impact absorber – insert slip ring and install with new screws (32j) Tightening torque 6 Nm. – Disconnect cable (38d) from flat-pin plug (38e) and connect to the flat-pin plug of the slip ring – connect cable which has been pushed in for horn (32k) in the upper right contact plate (arrow)

46–8310 Removing and installing steering angle sensor (N49)

Preceding work:
Steering wheel removed (46-8240).
Remove contact spiral, vehicles as of 02/93 (46-8300).

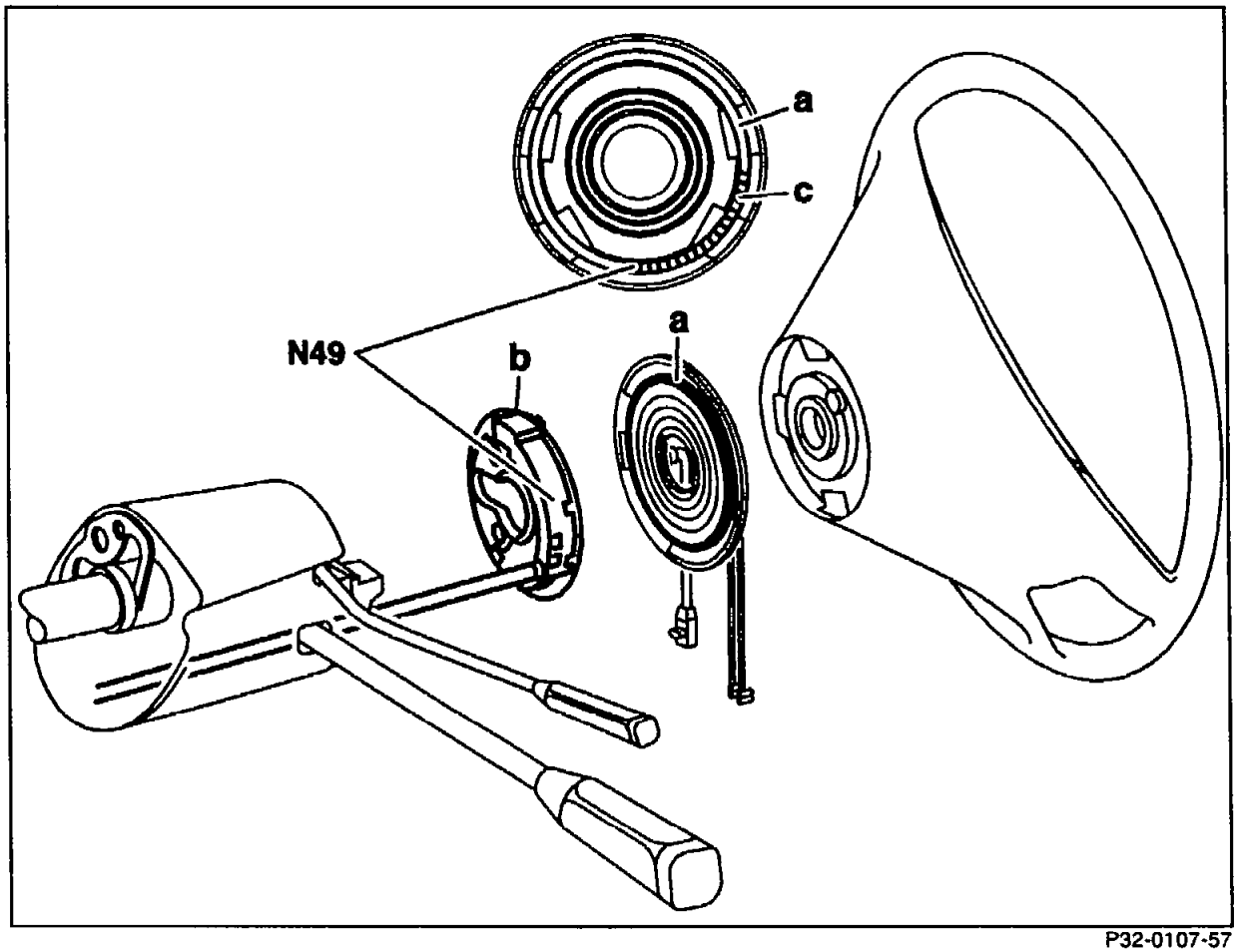

P32-0107-57

The wiper contacts with magnets (a)	are screwed to the steering wheel. 72 magnets (c) are located behind the plastic slip ring (outermost ring). Pay attention to these magnets when replacing the steering wheel on vehicles with 4MATIC.
Hall sensor (b)	Unscrew from jacket tube. Disconnect connector, steering angle sensor (N49x1) and airbag on connector and expose cables. Remove hall sensor and unscrew airbag carbon brushes from the hall sensor retaining plate.
Steering angle sensor	Reactivate after installation.

A. Steering wheel without airbag

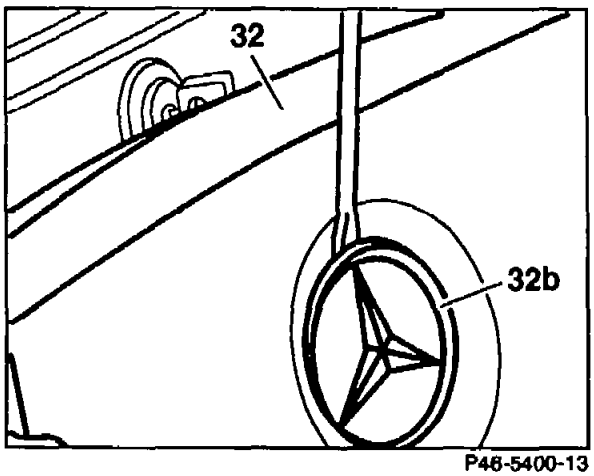

P46-5400-13

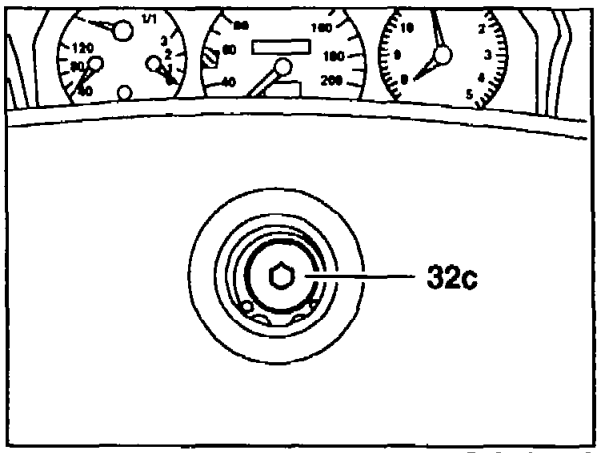

P46-5397-13

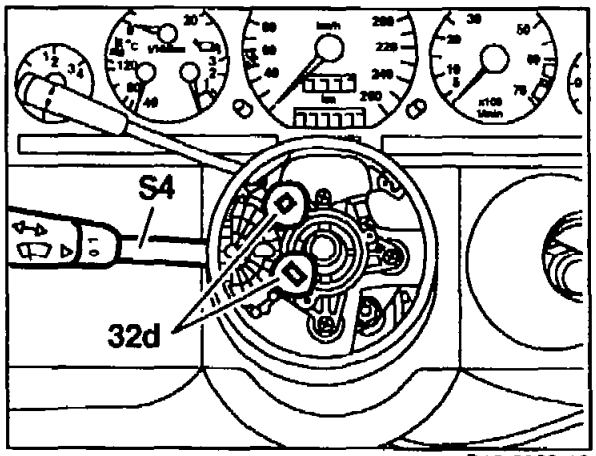

P46-5399-13

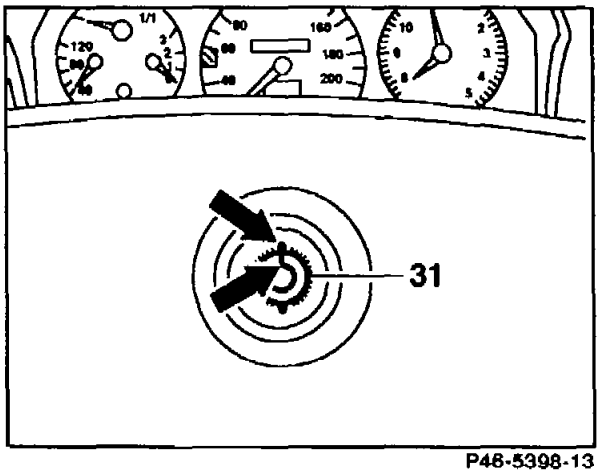

P46-5398-13

Steering wheel (32)	Position horizontally (front wheels in straight ahead position) and allow steering lock to engage. Insert/push adjustable steering column in fully.
Trademark (32b)	Remove, install using a small screwdriver.
Countersunk screw (32c)	Unscrew, screw in and replace, 80 Nm. To protect the steering lock and the jacket tube, arrange for an assistant to steady the steering wheel (32).

Steering wheel (32)	If necessary mark installed position in relation to steering shaft, pull off, install. **Note** When installing, align recess on the steering wheel with marking on the steering shaft (arrow) (since 01/90) or observe self-made installation markings.
Carbon brushes (32d) and brass contact rings . . .	Check. If there are grinding noises from the carbon brushes (32d), coat brass contact rings lightly with 331 contact grease or Elektrolube 2 GX.
On a test trip, check	• **Position of steering wheel** If the steering wheel is not on square, offset it by max. 1 tooth. If there is a greater deviation, check center position of steering gear (40-0323), adjust toe-in if necessary. • **Turn signal indicator resetting** If the steering wheel is offset by more than 1 tooth, satisfactory turn signal indicator resetting is no longer guaranteed.
Cleaning steering wheels	**Dirty or sticky steering wheels** can be cleaned with a neutral household detergent, the steering wheel being washed with a lukewarm solution of detergent. Scouring agents must not be used.

B. Steering wheel with airbag

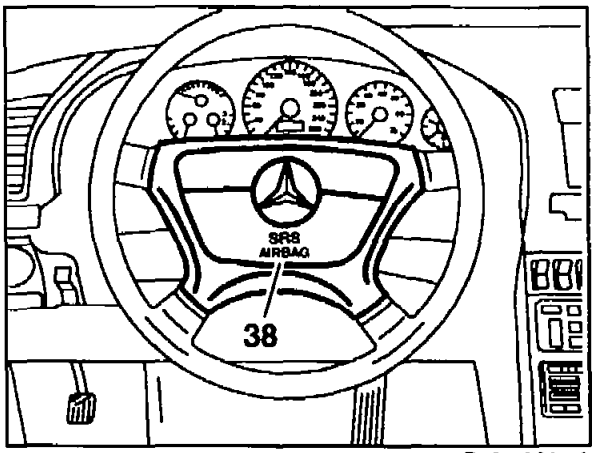

P46-5395-13

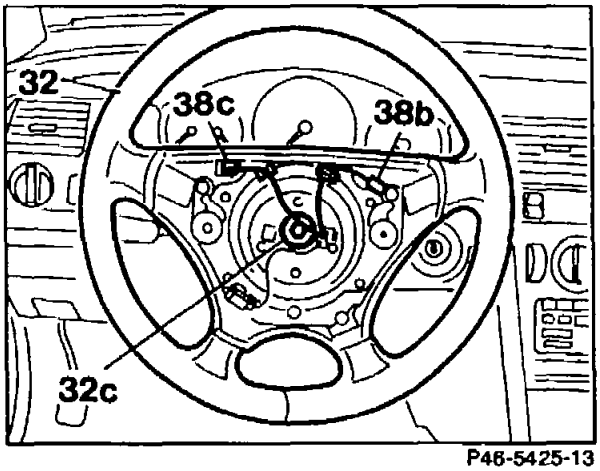

P46-5425-13

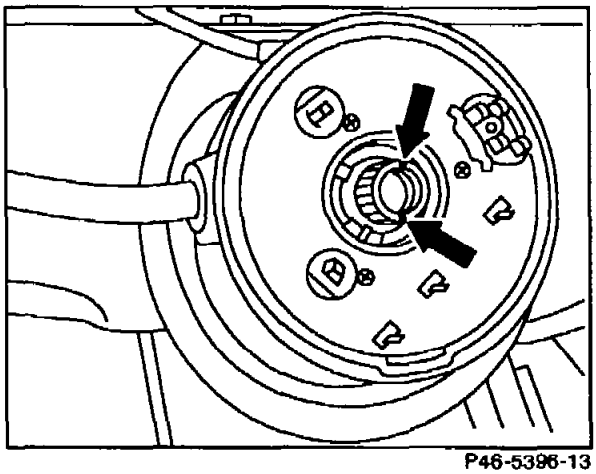

P46-5396-13

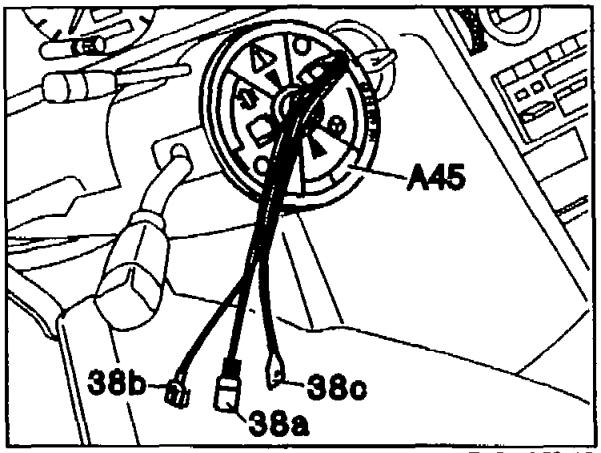

P46-5373-13

Battery	Disconnect, connect.
Airbag unit (38)	Remove, install (91-660).
	⚠ **Observe safety regulations for airbag**
Steering wheel (32)	Position horizontally (front wheels in straight ahead position). Allow steering lock to engage.
Model 124 with contact spiral (A45) as of 07/93	
Connectors (38b and 38c)	Disconnect, connect, guide through recess in steering wheel.
Countersunk screw (32c)	Unscrew, screw in and replace, 80 Nm.

Steering wheel (32)	Mark installed position in relation to steering shaft if necessary, remove, install. **Note** When installing, align recess on the steering wheel with marking on steering shaft (arrow) (since 01/90) or observe self-made installation markings.
Carbon brushes (32d) and brass contact rings . . .	Check. ⚠ The brass contact rings must **not** be lubricated
On a test trip, check	• **Position of steering wheel** If the steering wheel is not on square, offset it by max. 1 tooth. If there is a greater deviation, check center position of steering gear (40-0323), adjust toe-in if necessary. • **Turn signal indicator resetting** If the steering wheel is offset by more than 1 tooth, satisfactory turn signal indicator resetting is no longer guaranteed. • **Airbag indicator lamp** Observe this when turning steering to full lock in both directions and when the engine is running. The airbag indicator lamp must not come on. • **Steering angle sensor** (on 4MATIC) Reactivate in both directions when the engine is running by applying full lock.
Cleaning steering wheels	**Dirty or sticky steering wheels** can be cleaned with a neutral household detergent, the steering wheel being washed with a lukewarm solution of detergent. Scouring agents must not be used.

Special tools

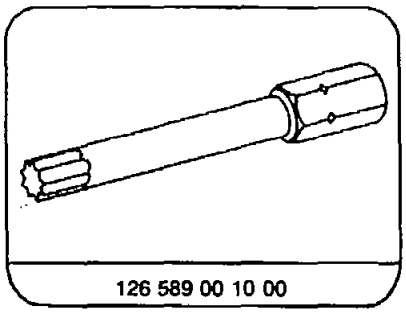

126 589 00 10 00

⚠

On vehicles with 4MATIC, a magnetic ring with 72 magnets is installed in the outer plastic track (arrow). When installing the steering wheel, ensure that no iron chips have been drawn in from the surroundings.

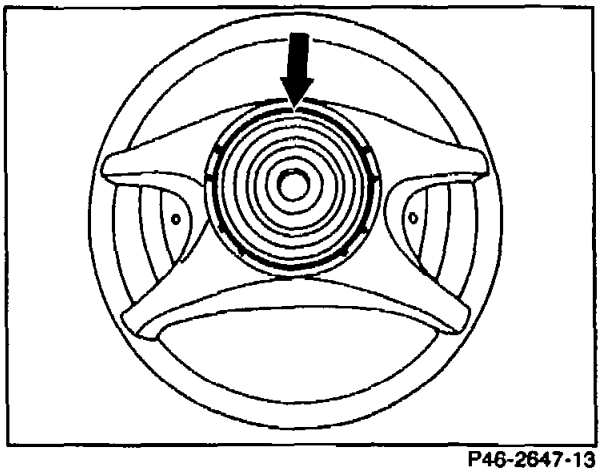

P46-2647-13

Standardisation of replacement steering wheels

New replacement steering wheels have been developed with the introduction of the contact spiral as of 02/93.

- Steering wheels are offered in the installed condition for the contact spirals.
  This also includes a cable (38d) on a flat-pin plug (38e).

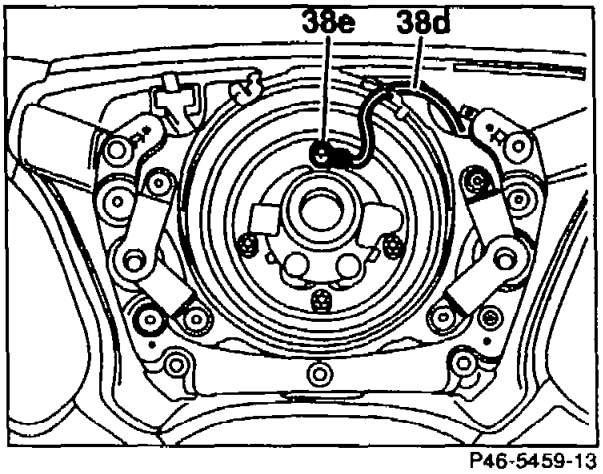

P46-5459-13

- On steering wheels prior to the introduction of the contact spiral, the slip ring must be reassembled or ordered at the same time according to the appropriate special equipment. The electrical cables are to be routed as shown.

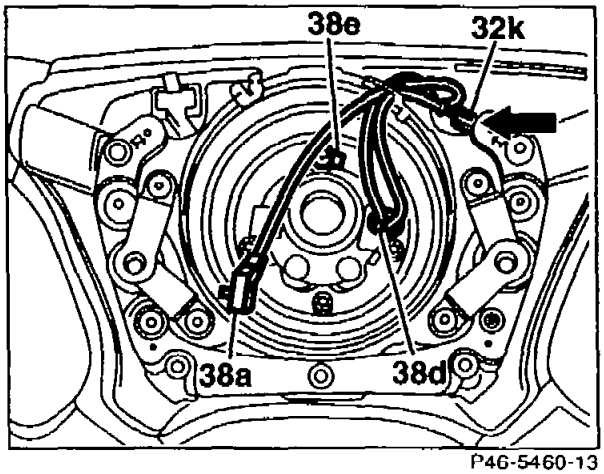

Replacement steering wheel in the installed condition for vehicles with wiper contacts

P46-5460-13

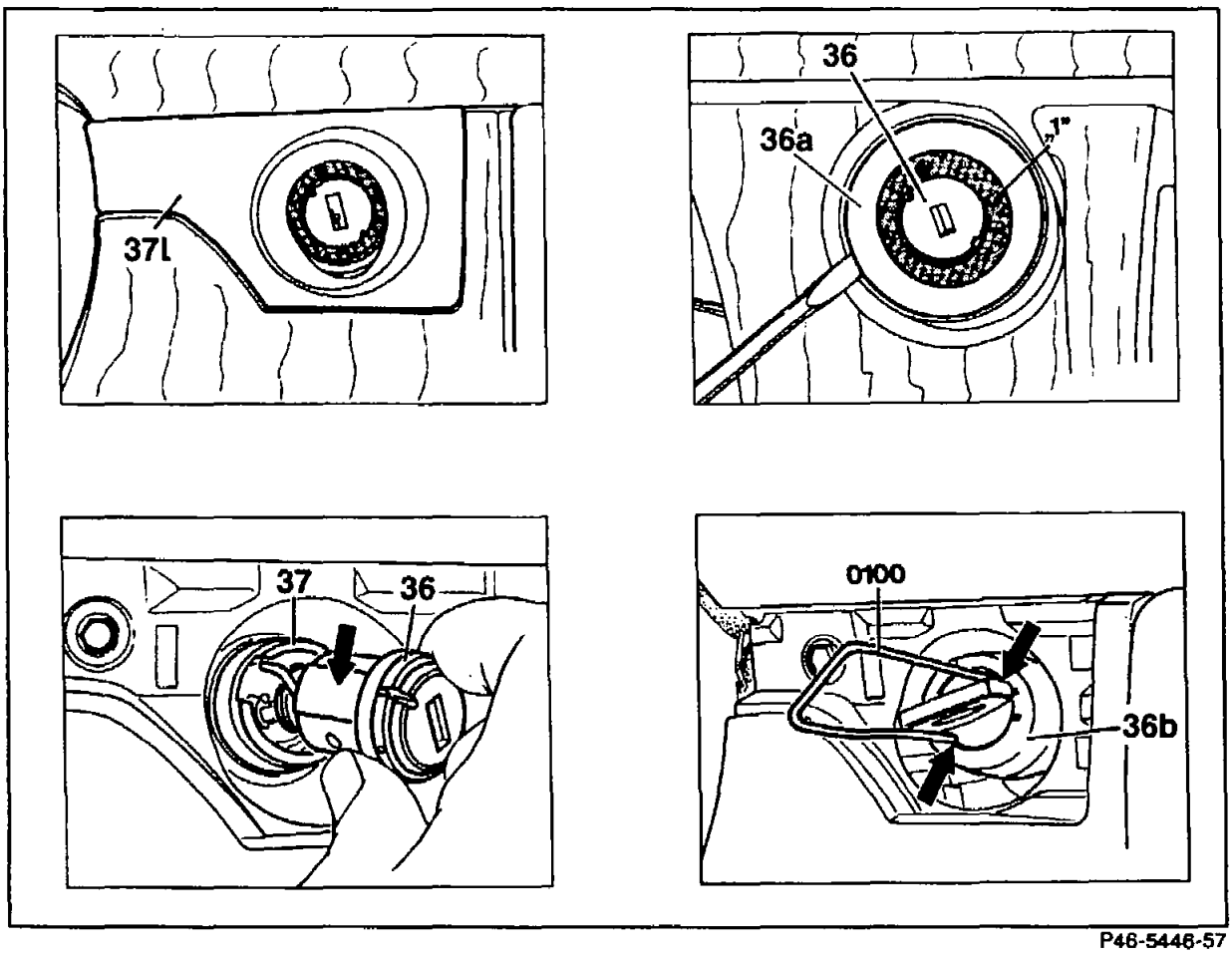

P46-5446-57

Removal of lock cylinder

Cover (37l), model 124	Remove from the instrument panel, install.
Escutcheon (36a), model 201	Remove, install using a small screwdriver.
Lock cylinder (36)	Turn into position "1" with key.
Disengaging wire (0100)	Press into the bores (arrows) and unlock the locking detents by overcoming the spring resistance.
Lock cylinder (36) with cap (36b)	Remove from steering lock (37).

Key and disengaging wire (0100)	Remove from lock cylinder (36), remove cap (36b).

Installation of lock cylinder

Lock cylinder (36)	Install in the cap (36b), push in key and turn into position "1". Press lock cylinder (36) into the steering lock with key and cap (36b) until the cap (36b) engages (observe groove assignment).

Note

If the lock cylinder/key is notchy or binding, spray lock cylinder with lock cylinder grease. If the complaint cannot be eliminated, replace lock cylinder and key which has been in continual use.

Lubricants

Lock cylinder grease	Part no. 001 989 26 51 10

Shop-made tool

Effective length of wire = 320 mm.

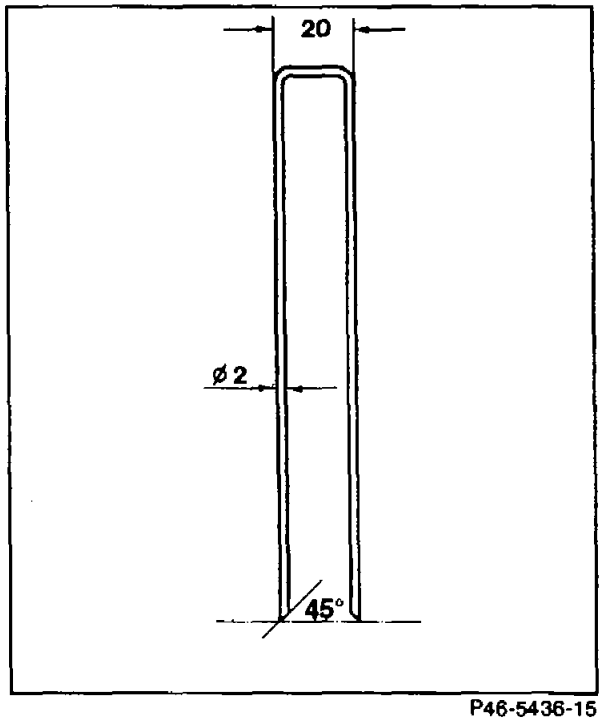

P46-5436-15

Preceding work:
Cover below instrument panel removed (68-150).
Model 201 instrument cluster removed (54-250).

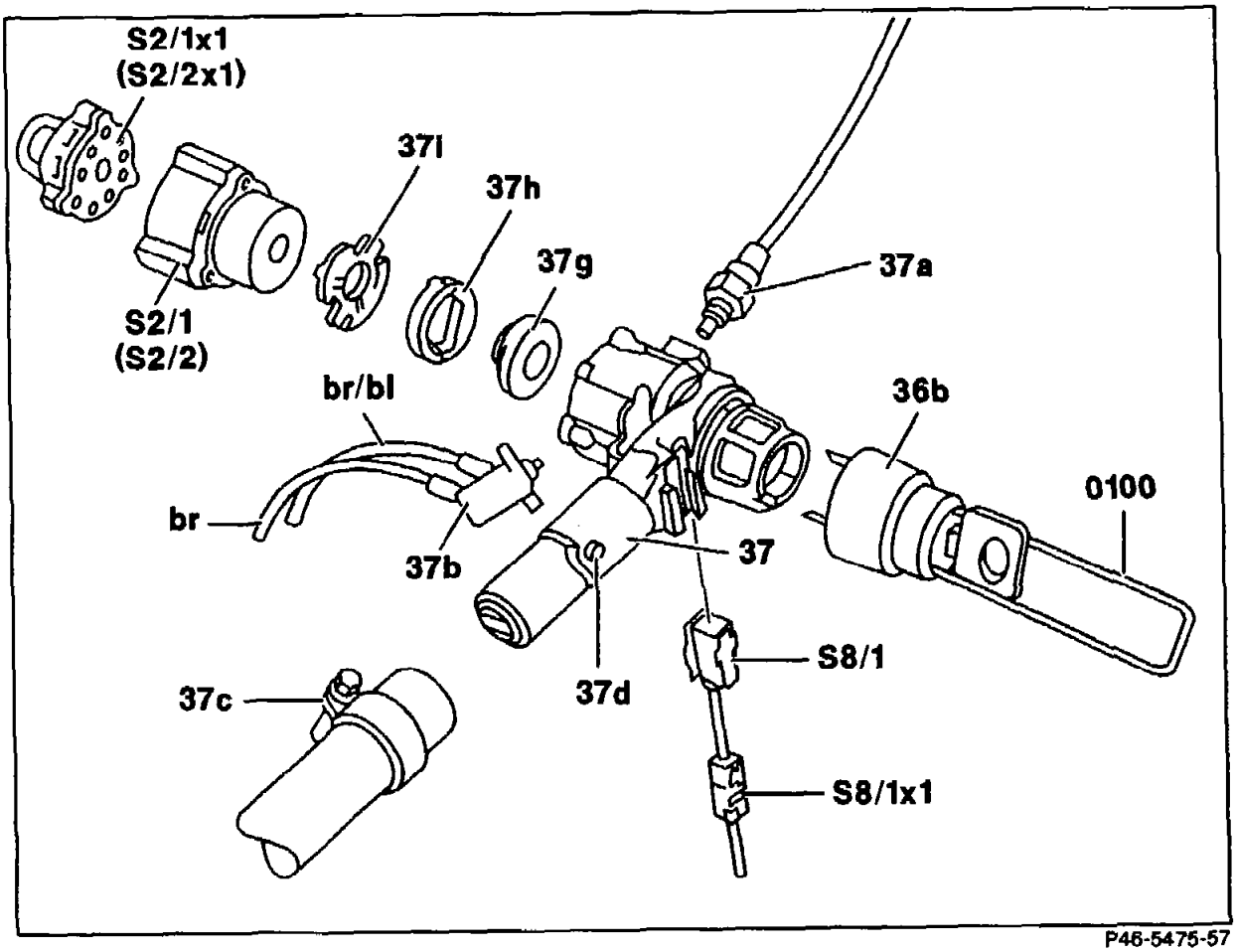

Lock cylinder (36) with cap (36b)	remove, install in key position "1" (46-8110). Use disengaging wire (0100).
Connector (S8/1x1)	Disconnect, connect
Connector (S2/1x1)	Disconnect, connect
Wire cable (37a)	on vehicles with parking lock interlock, unscrew, screw on (as of 01/90).
Vacuum lines (br, br/bl)	On vehicles with diesel engine, disconnect, connect. Observe installed position of vacuum lines (Number 5).

Clamp (37c)	Loosen, press in locking pin (37d) and withdraw steering lock (37) from the mount of the jacket tube. When installing, ensure that the locking pin (37d) engages in the bore of the mount of the jacket tube. ⚠ The steering lock (37) must not be turned out of position "1" without the ignition/starter switch (S2/1) or glow/starter switch (S2/2) otherwise the steering lock locks in such a way that it cannot be released.
Ignition/starter switch (S2/1) or glow/starter switch (S2/2)	Detach, attach. Observe locating lug.
Warning buzzer contact, exterior lamps (S8/1) . . .	Remove, install.
Glow/starter switch valve (37b)	Remove, install.
Washer (37i), parking lock valve (37h) and cam (37g)	remove, install (Number 10).

Shop-made tool

Effective length of wire = 320 mm.

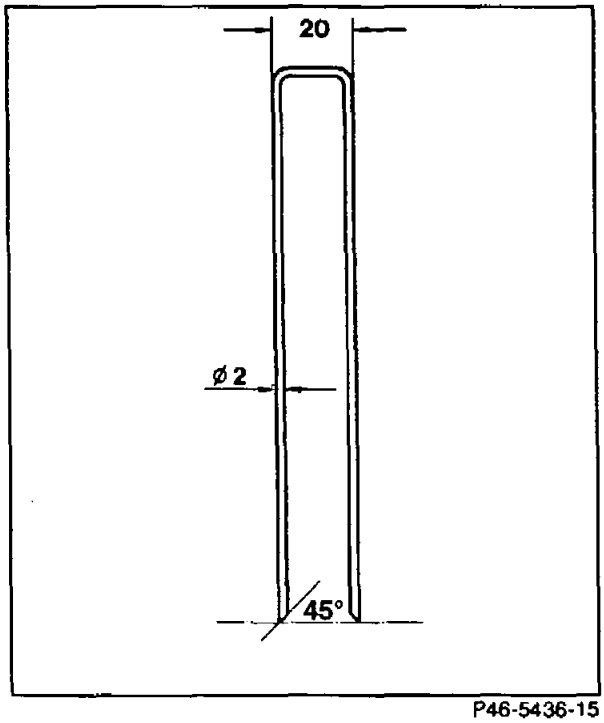

P46-5436-15

Removal, Installation

1 Remove lock cylinder with cap (36b) in key position "1". Use disengaging wire (0100) (46-8110).

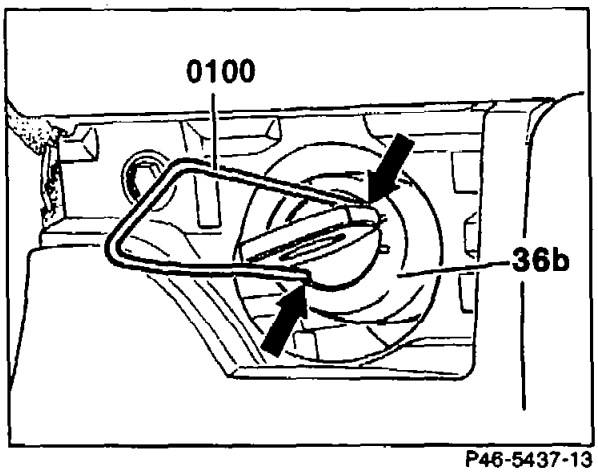

P46-5437-13

2 Disconnect connector (S8/1x1) from warning buzzer contact (S8/1).

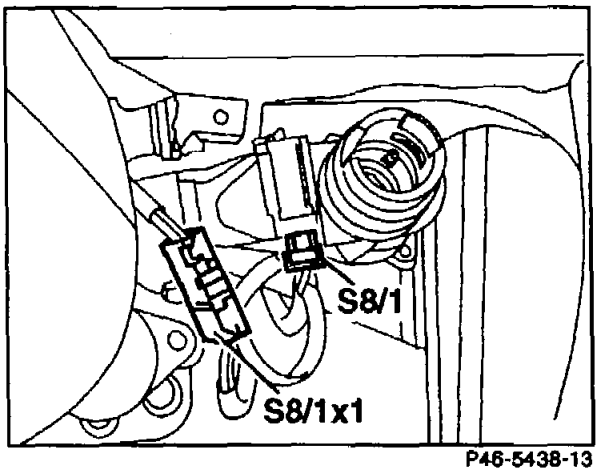

P46-5438-13

3 Disconnect connector (S2/1x1) from ignition/starter switch (S2/1) or glow/starter switch (S2/2).

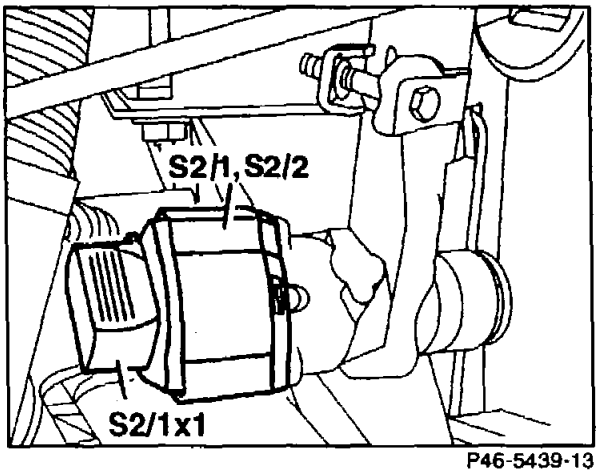

P46-5439-13

4 Unscrew wire cable (37a).

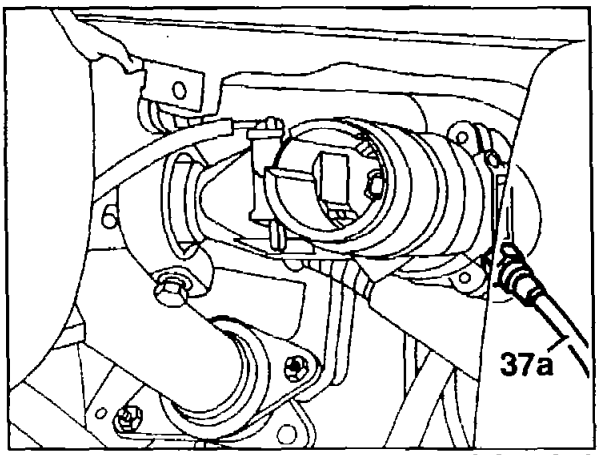

P46-5440-13

Note

Since 01/90 (USA as of Model year 90), all vehicles with automatic transmission are fitted with a parking lock interlock. As a result the ignition key can only be removed in selector lever position "P". When the steering lock is removed and the locking cylinder is installed, the parking lock valve must be pushed back through the bore for the wire cable in order to remove the ignition key. For adjustment of the parking lock valve, refer to repair instructions "automatic transmission 722.4".

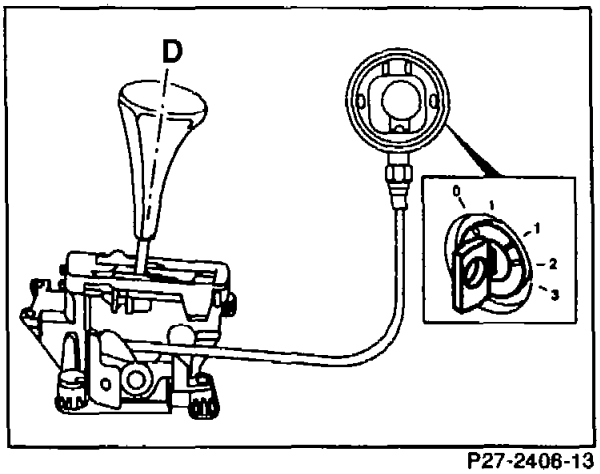

P27-2406-13

5 On vehicles with diesel engines, disconnect vacuum lines (br, br/bl) from the glow/starter switch valve (37b).

Installation note

Observe installed position of vacuum lines.

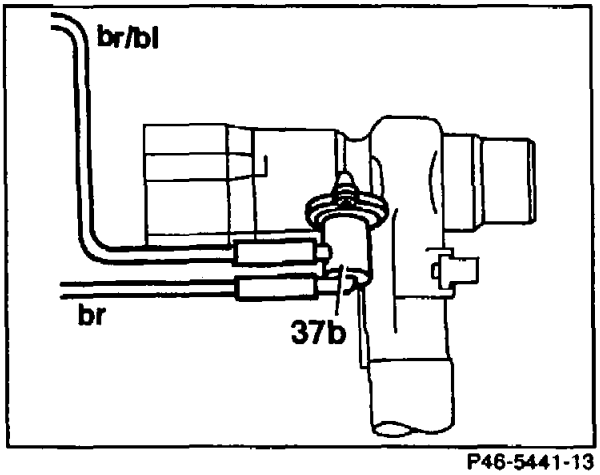

P46-5441-13

6 Loosen clamp (37c) on jacket tube, press in locking pin (37d) and withdraw steering lock from the mount of the jacket tube.

Installation note

When installing, ensure that the locking pin (37d) engages in the mount of the jacket tube.

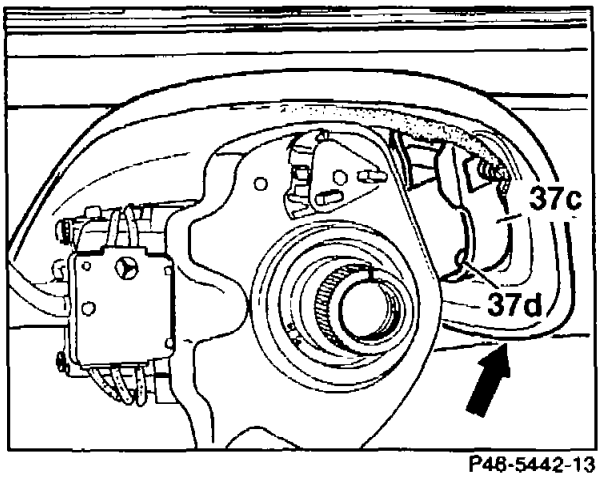

P46-5442-13

⚠

The steering lock must not be turned out of position "1" without the ignition starter switch (S2/1) or glow/starter switch (S2/2) (the rectangular recess in the shift shaft (37f) is in the direction of the steering lock shaft). Otherwise the built-in locking detent locks the steering lock in such a way that it cannot be released.

7 Detach ignition/starter switch (S2/1) or glow/starter switch (S2/2).

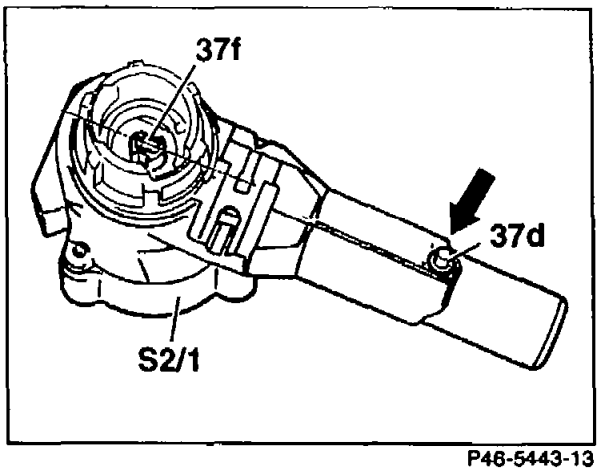

P46-5443-13

37d Locking pin
37f Shift shaft

Installation notes

⚠

Install the ignition/starter switch (S2/1) or glow/starter switch (S2/2) before turning the steering lock.

- The steering lock can only be installed in lock cylinder position "1".
- If the steering lock is in the normal position "0" (locking pin 37d locked, locking pin 37e extended), the shift shaft is to be turned into the installed position "1".

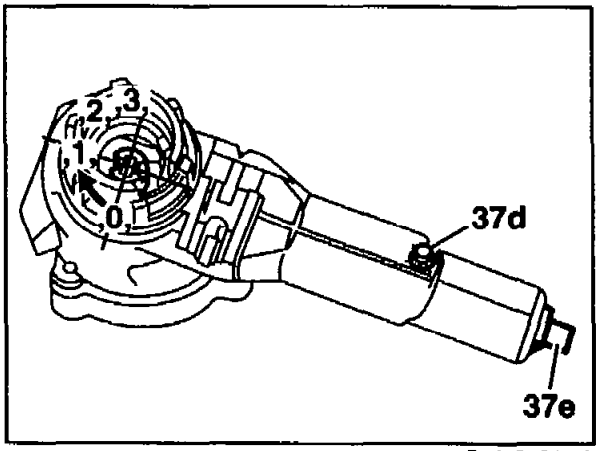

P46-5465-13

- Install the ignition/starter switch (S2/1) or glow/starter switch (S2/2) with the fixing lug in the recess of the steering lock (37) (arrow).
- Observe PIN assignment for the ignition/starter switch (S2/1) or glow/starter switch (S2/2) when assembling new parts.
- The ignition/starter switch (S2/1) or glow/starter switch (S2/2) can also be removed/installed when the steering lock is installed using a short screwdriver.

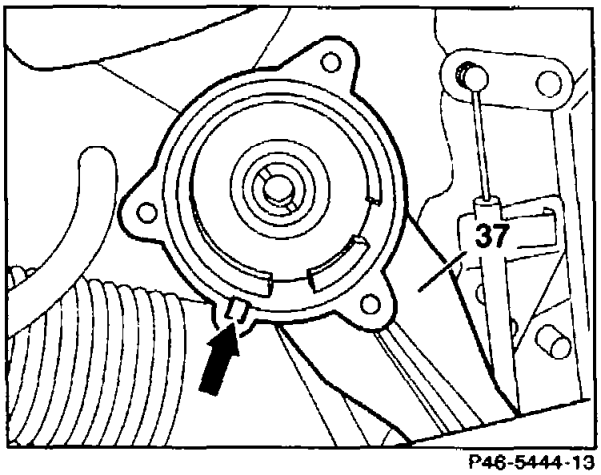

P46-5444-13

- The mounting bores (37k) for the ignition/starter switch (S2/1) or glow/starter switch (S2/2) and for the vacuum valve (37j) on diesel vehicles do **not** have a thread on the ET steering lock made by "Huf". During assembly, the threads must be cut in the steering lock by the self-tapping screws.

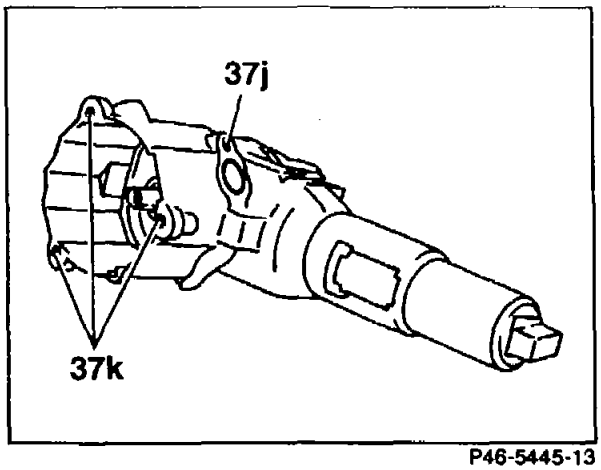

P46-5445-13

8 Remove warning buzzer contact, exterior lamps (S8/1) in key position "1".

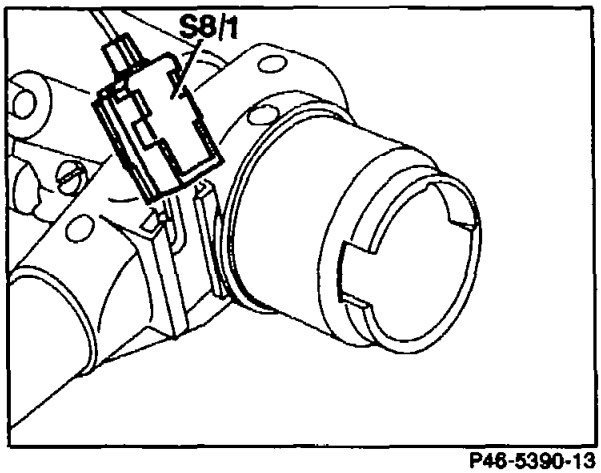

P46-5390-13

9 Remove glow/starter switch valve (37b).

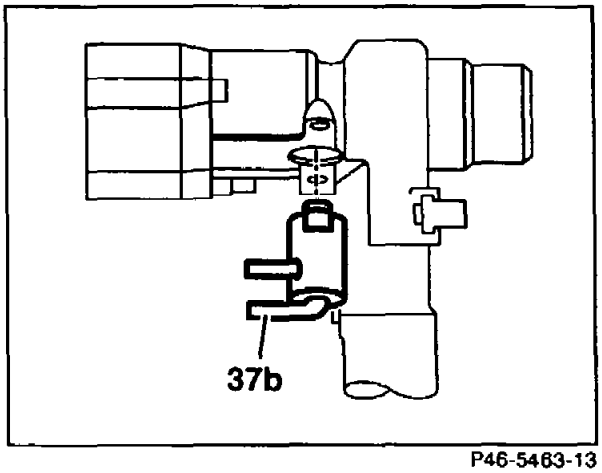

P46-5463-13

10 On vehicles with automatic transmission, remove washer (37i), parking lock valve (37h) and cam (37g).

Installation note

When the steering lock is replaced, the washer (37i), the parking lock valve (37h) and the cam (37g) must be changed at the same time (not included in the scope of the supply for the steering lock).

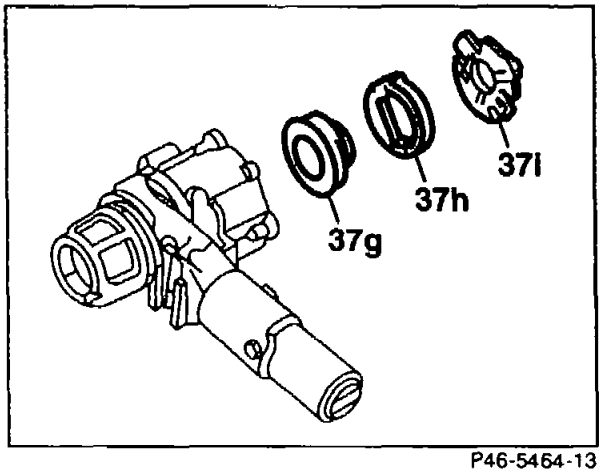

P46-5464-13

46 Steering

46–93065 Insufficient power assistance at full left lock, spongy — All models

1. Cause:
Air cushion in steering housing. This occurs in the most cases after performing repairs and incorrectly filling power steering pump/tandem pump (46–0715).

2. Remedy:
Drive car until oil in power steering pump/tandem pump is at normal operating temperature. Then park car at full right lock. Raise car at front axle with vehicle jack.
Wait approx. 10 minutes. Run engine at idle and with the car on the ground, turn steering several times from full left to full right lock.
Any remaining air cushion, detectable only when turning the steering rapidly to full left/right lock, will be slowly eliminated by the oil circulation (100–200 km).

46 Steering

46–89021 Oil flows out at steering gear adjusting screw — Models 124, 201

1. Cause:
Polyamide ring on lock nut does not provide adequate seal.

2. Remedy:
Replace lock nut, part No. 001 990 70 51

a) To do this, remove steering gear on cars with gasoline engines (46–3400).
Remove air filter housing complete on cars with diesel engines.
b) Mark position of adjusting screw with notches (arrows).
c) Replace lock nut without altering position of adjusting screw.
Tighten lock nut to 65 Nm.

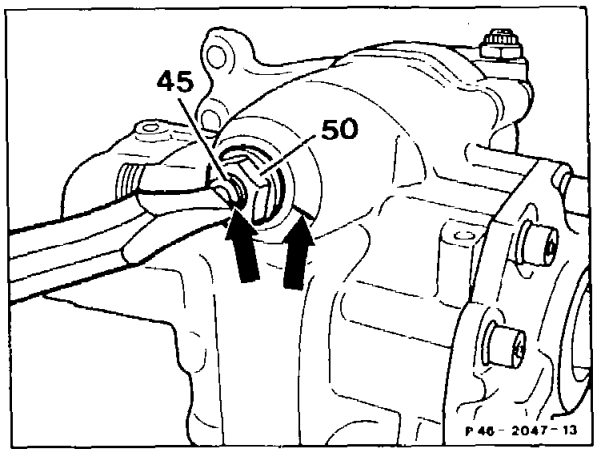

Note
If the adjusting screw has been inadvertently turned, re-set friction value of steering gear (46–0120).

46 Steering

46–88051	Oil flows out through breather cap of power steering pump	Models 124, 201

1. Cause:
Reservoir incorrectly filled (too high), see (46–0715).
No breather in protective tube.

2. Remedy:
Correct the oil level.
Drill breather (arrow) according to sizes indicated.

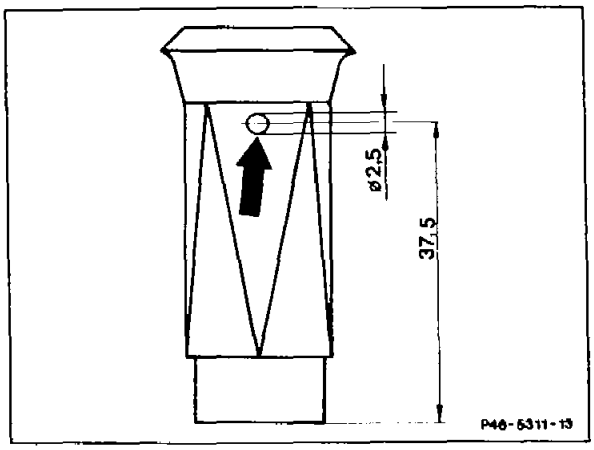

46 Steering

46–91085	Oil flows out through radial seal ring in pitman arm shaft/bearing cover	Models 124, 201

1.Cause:
Faulty seals (Götze, Pionier-Laura).
Pressure peaks in lubricating circuit (since 3/89 relief restrictor fitted).

2. Remedy:
Install new seal (Freudenberg – color blue), see (46–0236).

46 Steering

46–91086	Oil flows out through radial seal ring in steering shaft bearing cover	Models 124, 201

1.Cause:
Faulty seals (Götze, Pionier-Laura).
Pressure peaks in lubricating circuit (since 3/89 relief restrictor fitted).

2. Remedy:
Install new seal (Freudenberg – color blue).
Up to 9/87 seal can be replaced without any problem (press seal into bearing cover from outside. Recognizable from locking ring fitted).
As of 10/87 the steering gear must be disassembled (46–0236). Seal can only be replaced if complete special tool available.

46 Steering

46–90011	Knocking noise from steering gear when driving on uneven road surfaces and steering slightly turned.	All models

1. Cause:
Excessive play in steering gear causing tooth flanks to strike against each other.

2. Remedy:
Set steering gear friction value (46–0120).

46 Steering

46–91061	Steering pressure point on left or right lock	Model 140

1.Cause:
Thrust washer on control valve sticks. This can be detected as play during brief steering movements when vehicle is stationary.

2.Remedy:
Install new steering gear (production number above 92 73400). The production number is stamped on the flat surface of the steering housing.

46 Steering

46–91087	Leaking power steering pump at seal of bearing flange or at bearing flange	Model 124, 201

1.Cause:
Severe vibrations from belt drive and engine (particularly diesel engine).

2. Remedy:
Install ZF power steering pump with reinforced bearing flange (production breakpoint 11/89).
Check that the power steering pump is filled correctly (46–0715).
Check connections on oil hoses for leaks.

Model 107 up through 07.1985
123
126 up through 08.1985
201 up through 12.1984

Visual check

Check all fuel system components for leaks.

Check condition of fuel lines and hoses and for correct routing.

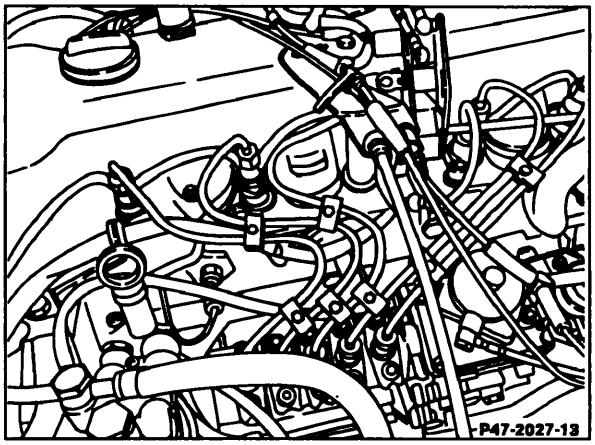

All diesel engines

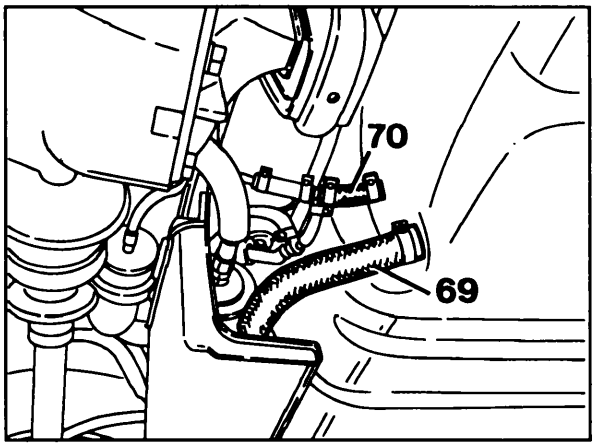

Model 123 station wagon
69 Supply line
70 return line

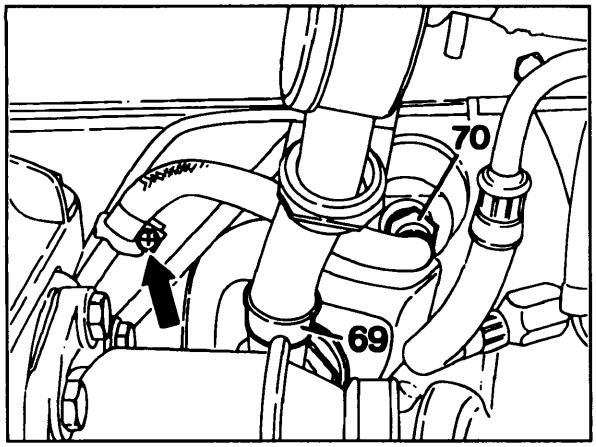

Model 126
69 Supply line
70 Return line

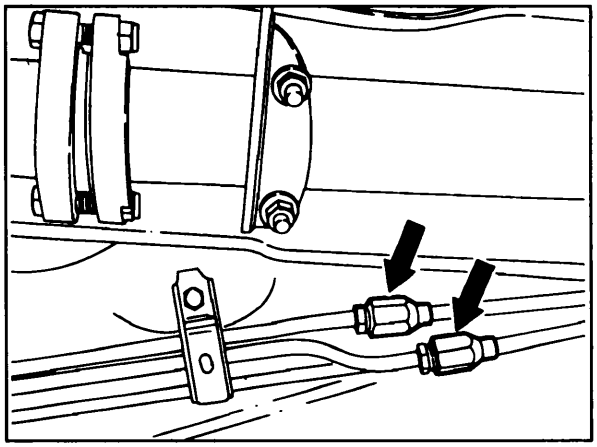

Model 126

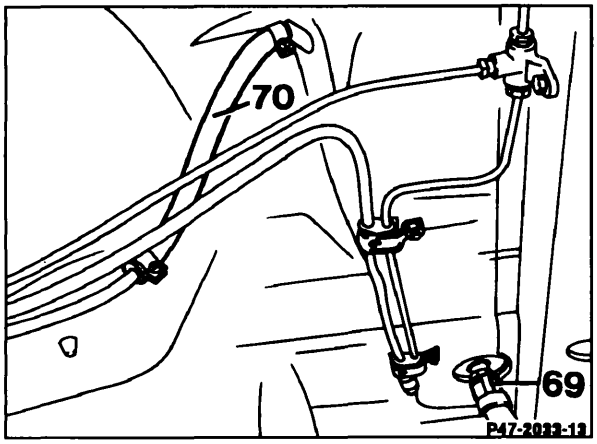

Model 107

69 Supply line

70 Retrun line

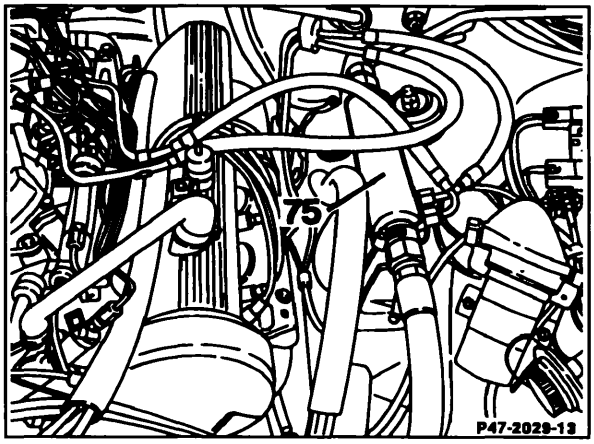

Fuel cooler (75)

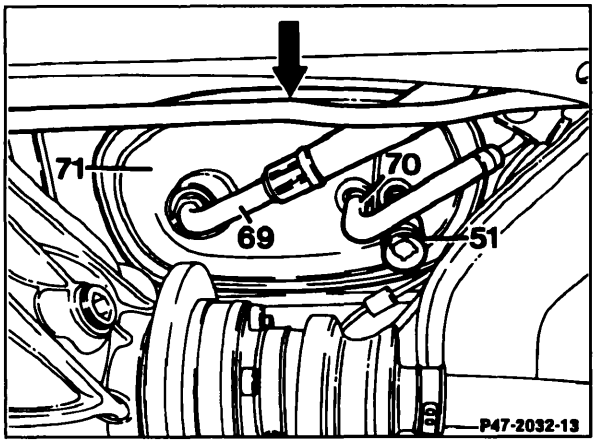

Model 201

51 Vent valve

69 Supply line

70 Retrun line

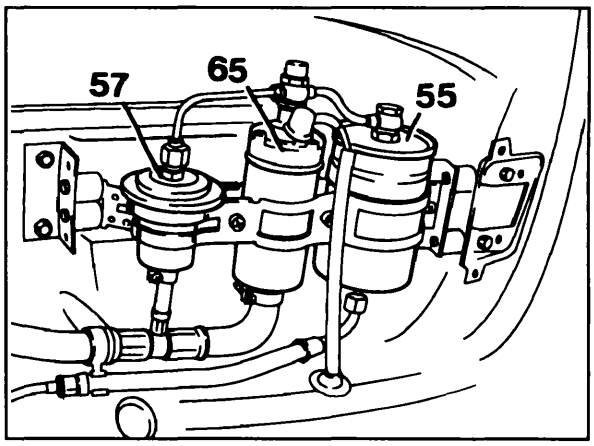

Model 201 Fuel pump assembly

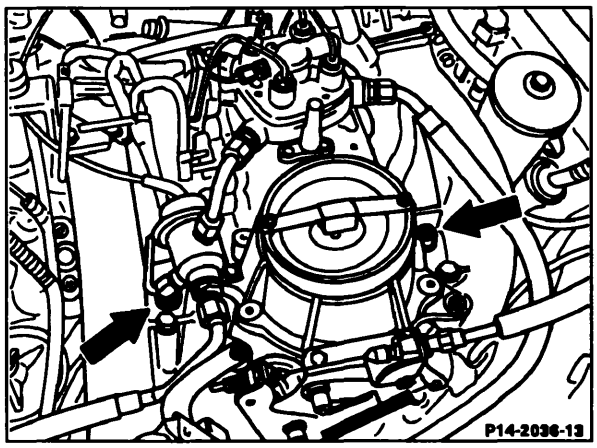

Model 201

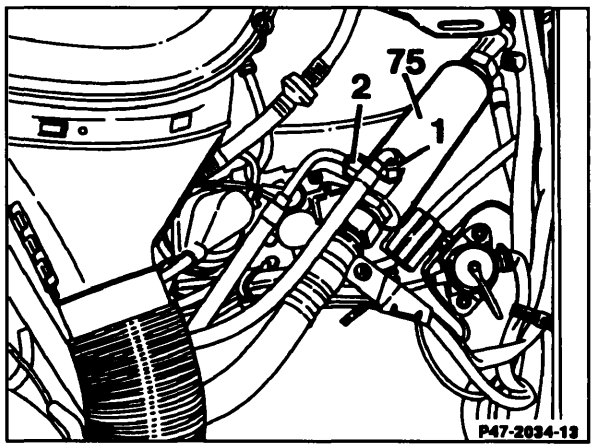

Model 201 Fuel cooler (75)

(AUS), (J), (USA)

To reduce the formation of vapour bubbles in the fuel system at high outside temperatures, a fuel cooler (75) is installed. It is located in the refrigerant return line between evaporator and A/C compressor. The fuel cooler is attached to the left wheelhouse in the engine compartment. When the engine is running, the fuel fed back by the diaphragm pressure regulator flows back pressureless through the fuel cooler into the fuel tank.

As soon as the A/C compressor is switched off, gases refrigerant, which flows through the inner pipe of the fuel cooler, removes the heat from the fuel.

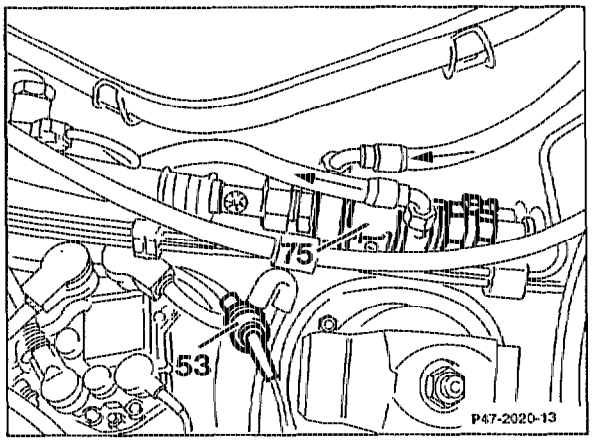

47-0010 Fuel tank with splash bowl

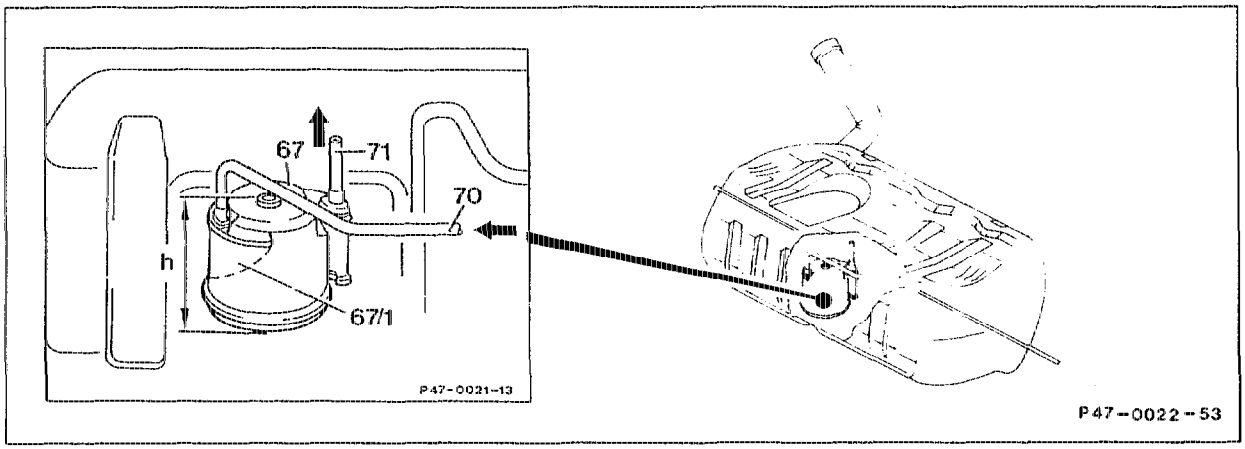

67	Splash bowl	70	Return pipe
67/1	Separating chamber	71	Riser pipe

A splash bowl (67) is installed in the fuel tank. Its task is to reliably supply the engine with fuel when the fuel level in the tank is low and during long cornering.
The fuel return jet flows at high speed out of the return nozzle into the splash bowl when the fuel pump is operating. It thus entrains the fuel around the return nozzle with it into the splash bowl. The return nozzle is located at the bottom of the splash bowl.

The fuel level (h) is retained in the splash bowl even if the level in the fuel tank drops below the height (h). The vapour bubbles contained in the fuel flowing back are separated from the fuel in the separating chamber (67/1) and rise up via the riser pipe (71). This avoids splashing noises.

A. Model 124

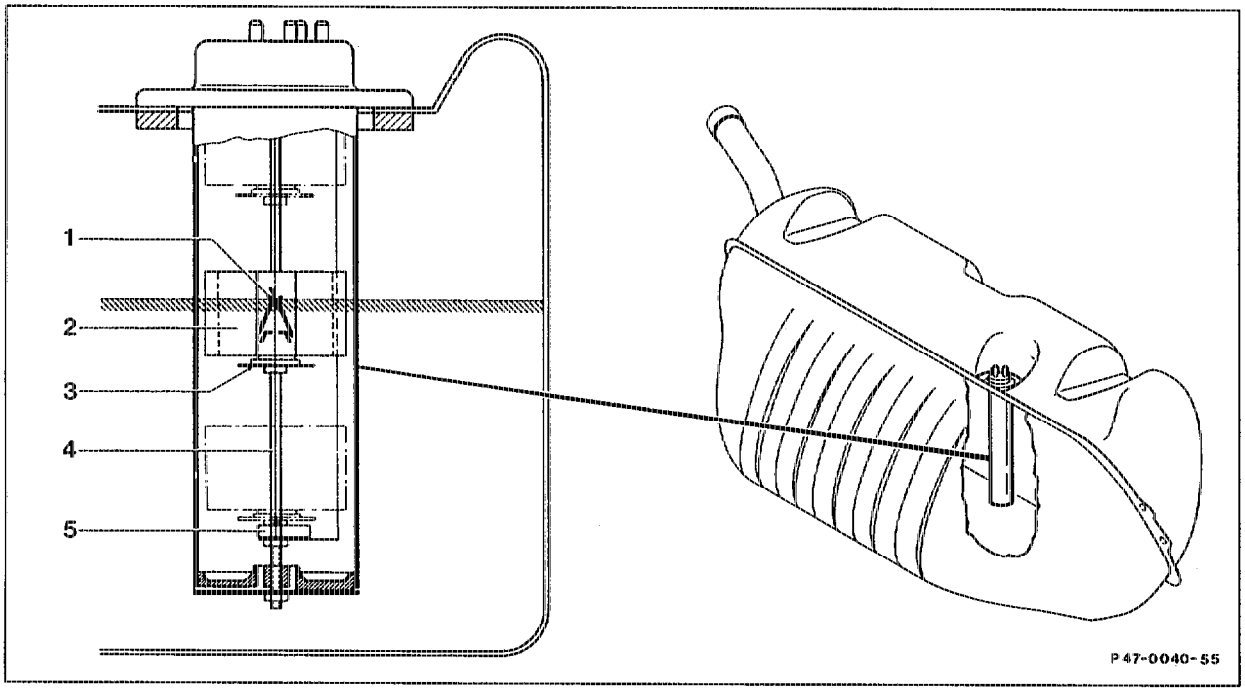

1	Wiper contact	4	Guide and contact rod
2	Float	5	Reserve warning contact
3	Contact plate		

As the fuel level drops, the variable resistance is increased by the float (2) moving down, as a result of which the voltage drops and the needle of the gauge in the instrument cluster moves back.
If the fuel level drops to the reserve quantity, the reserve warning contact closes (5) and switches ground to the reserve warning lamp, as a result of which this lamp lights up when the engine is running.

Note
The reserve warning lamp lights up with a weak light as a check function, with a strong light to indicate reserve quantity.
Testing fuel gauge (54-257).

B. Models 129, 140

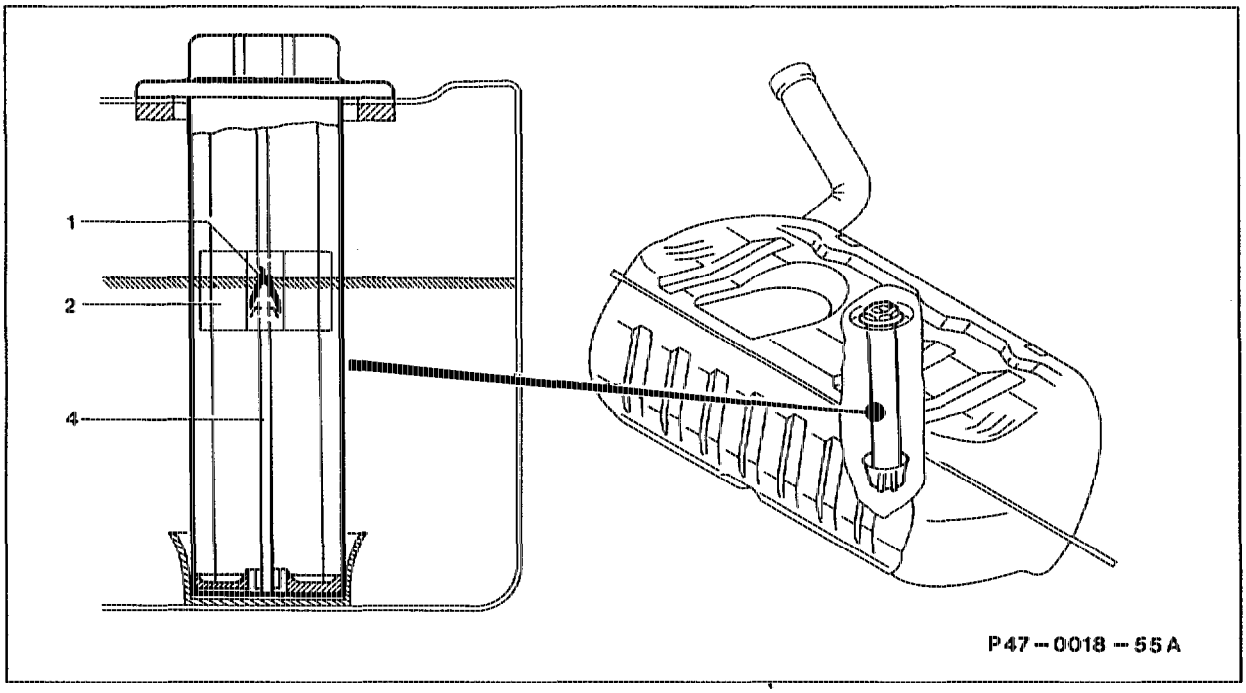

Shown on model 129

1	Wiper contact
2	Float
4	Guide and contact rod

As the fuel level drops, the variable resistance is increased by the float (2) as it moves down, as a result of which the voltage drops and the needle of the gauge in the instrument cluster moves back.
If the fuel level drops to reserve quantity, the reserve warning lamp is switched on by electronics in the gauge. As the reserve quantity decreases, the needle moves in the reserve field of the gauge to the end stop (dynamic indication). The reserve warning lamp lights up when the ignition is switched on (check function). As soon as the engine is running, it goes out provided the fuel tank contains more than the reserve quantity.

Note
The reserve warning lamp lights up with a weak light as a check function, and with a stronger light to indicate reserve quantity.
Testing fuel gauge (54-257).

A. All models

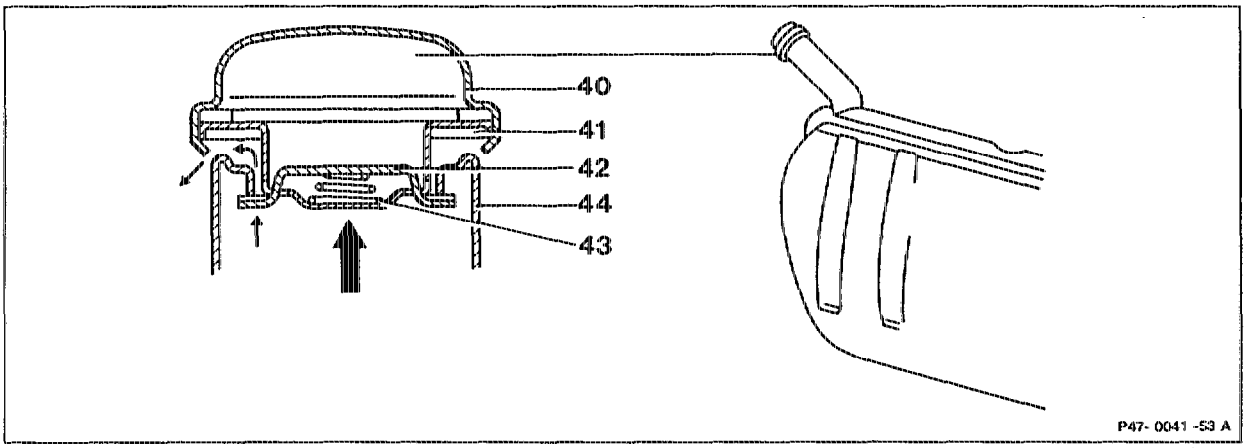

40	Cap	43	Compression spring
41	Seal	44	Filler neck
42	Locking bar		

Cap

The fuel evaporation gases are able to escape through the cap at a pressure of 100–300 mbar. This only occurs, however, if, for example, the vent pipe from the fuel tank is blocked as a result of crimping or improper routing. If the system is operating properly, a pressure of up to 50 mbar may occur in the fuel tank.

B. Model 124

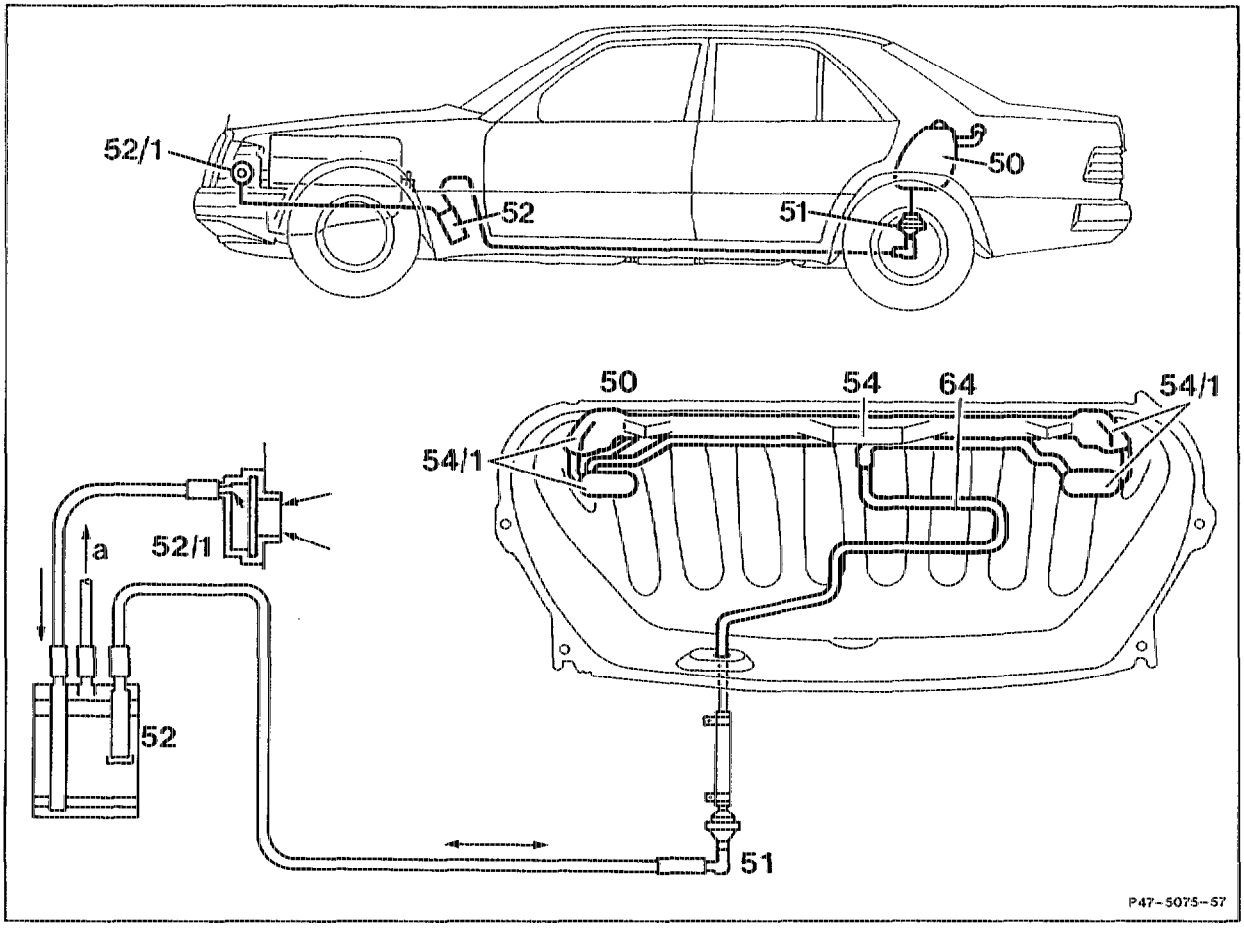

a To regeneration valve

The vent system consists of a central pipe (54) with interruption vessels (54/1) at the ends. The interruption vessels (54/1) prevent the fuel escaping along the vent line (64). The vent line (64) runs from the central pipe through the vent valve (51) to the activated charcoal filter (52). Air is admitted to the activated charcoal filter (52) and fuel tank (50) from the engine compartment through the cup seal (52/1).

C. Models 129, 140

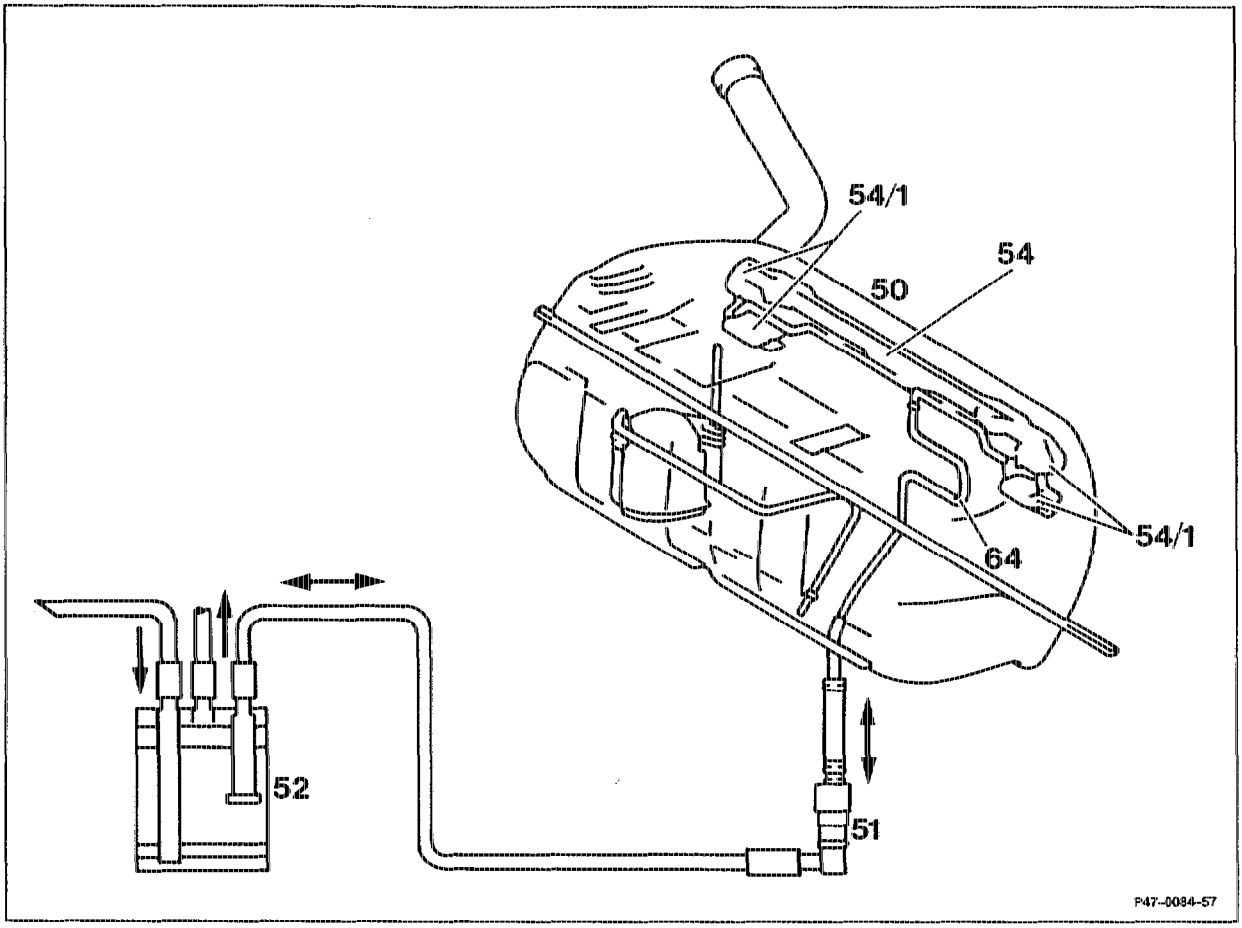

The vent system consists of a central pipe (54) with interruption vessels (54/1) at the ends. The interruption vessels (54/1) prevent the fuel escaping along the vent pipe (64). The vent pipe runs from the central pipe (64) through the vent valve (51) to the activated charcoal filter (52).

Model 129
Air is admitted to the activated charcoal filter (52) and fuel tank (50) from the left front of the side member.

Model 140
Air is admitted to the activated charcoal filter (52) and fuel tank (50) from the rear left wheelhouse.

D. Model 140 with through-loading facility

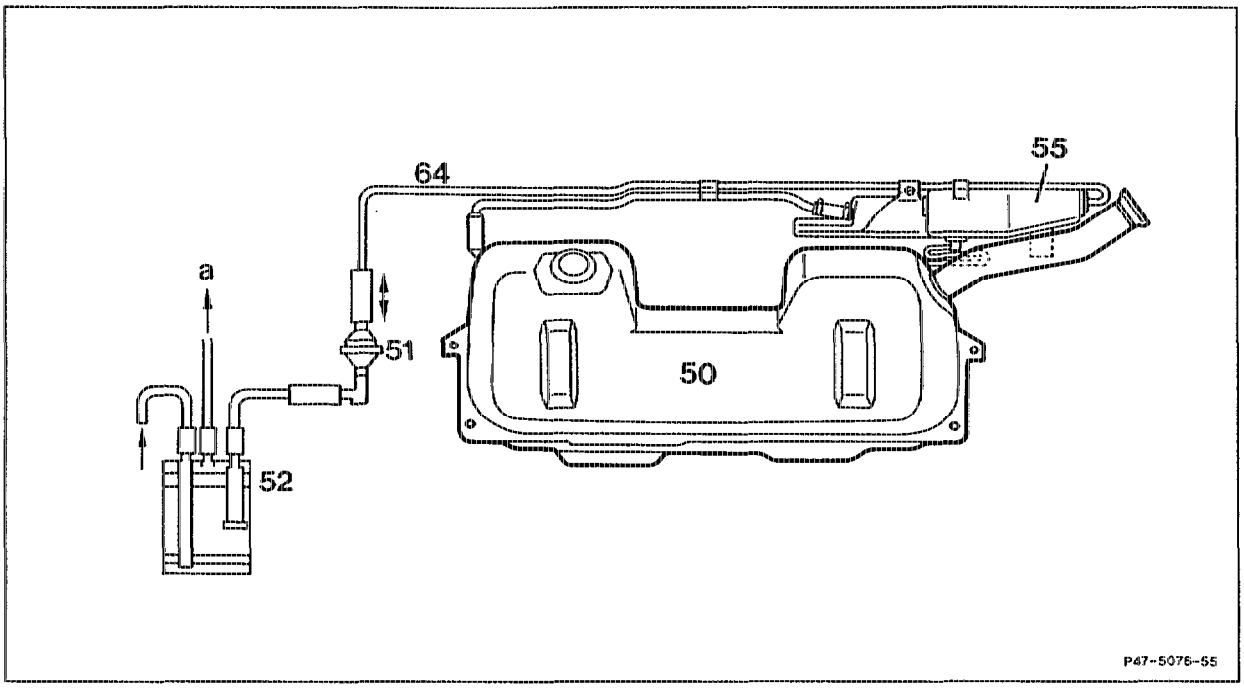

50	Fuel tank	55	Expansion tank
51	Vent valve	64	Vent pipe
52	Activated charcoal filter		
		a	To regeneration valve

On vehicles with through-loading facility, the fuel tank (50) is lower in the middle and the expansion tank (55) is located to the outside.

A. Function diagram

a) Engine 104

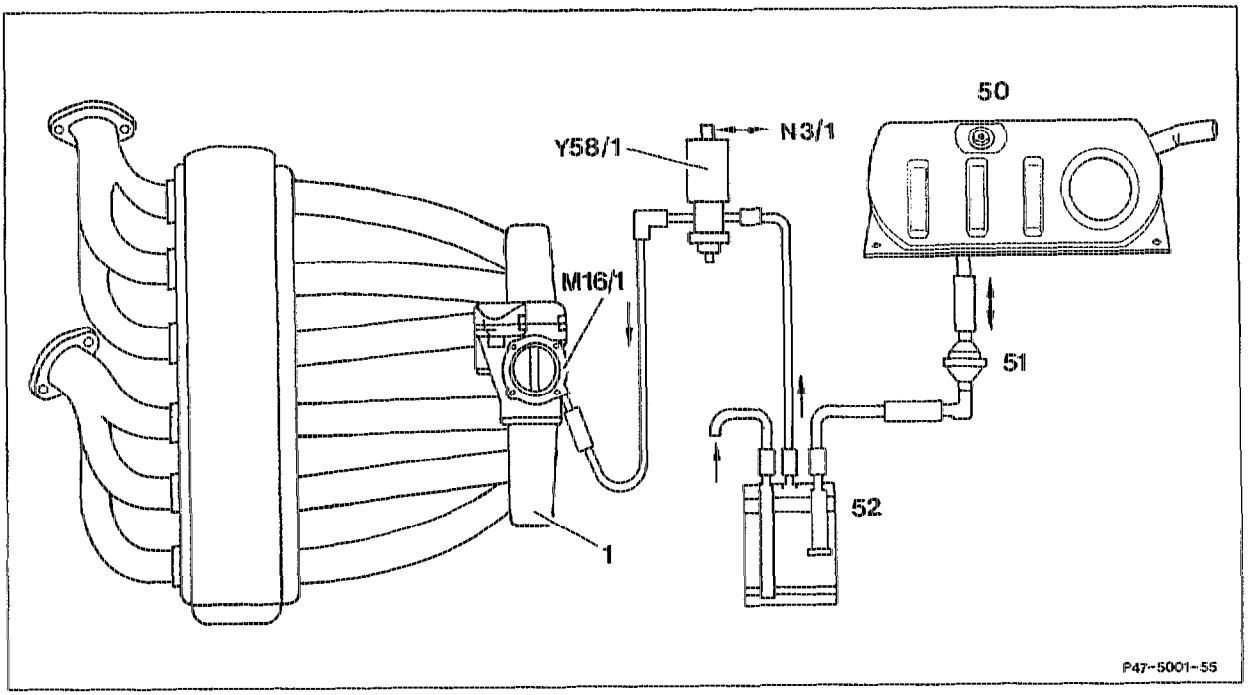

1	Intake manifold	M16/1	Electronic accelerator pedal (EFP) actuator
50	Fuel tank	N3/1	LH control unit
51	Vent valve	Y58/1	Regeneration switchover valve
52	Activated charcoal filter		

b) Engine 119

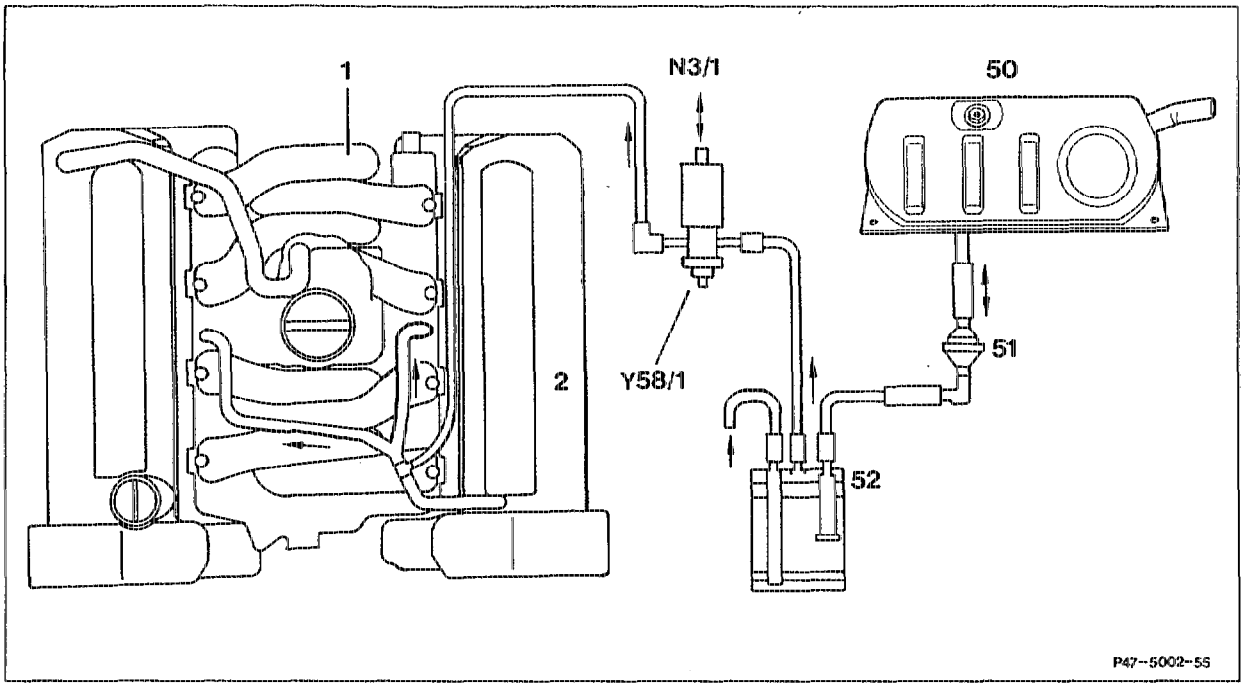

1	Intake manifold	N3/1	LH control unit
2	Left cylinder head	Y58/1	Regeneration switchover valve
50	Fuel tank		
51	Vent valve		
52	Activated charcoal filter		

c) Engine 120

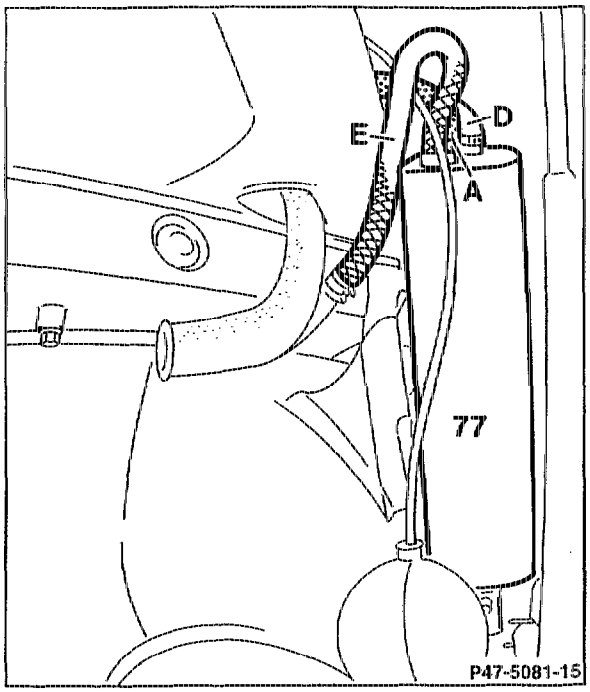

50	Fuel tank
51	Vent valve
52	Activated charcoal filter
M16/3	Right electronic accelerator pedal actuator
M16/4	Left electronic accelerator pedal actuator
N3/2	Left LH control unit
N3/3	Right LH control unit
Y58/2	Left regeneration switchover valve
Y58/3	Right regeneration switchover valve

d) Vehicles with through-loading facility

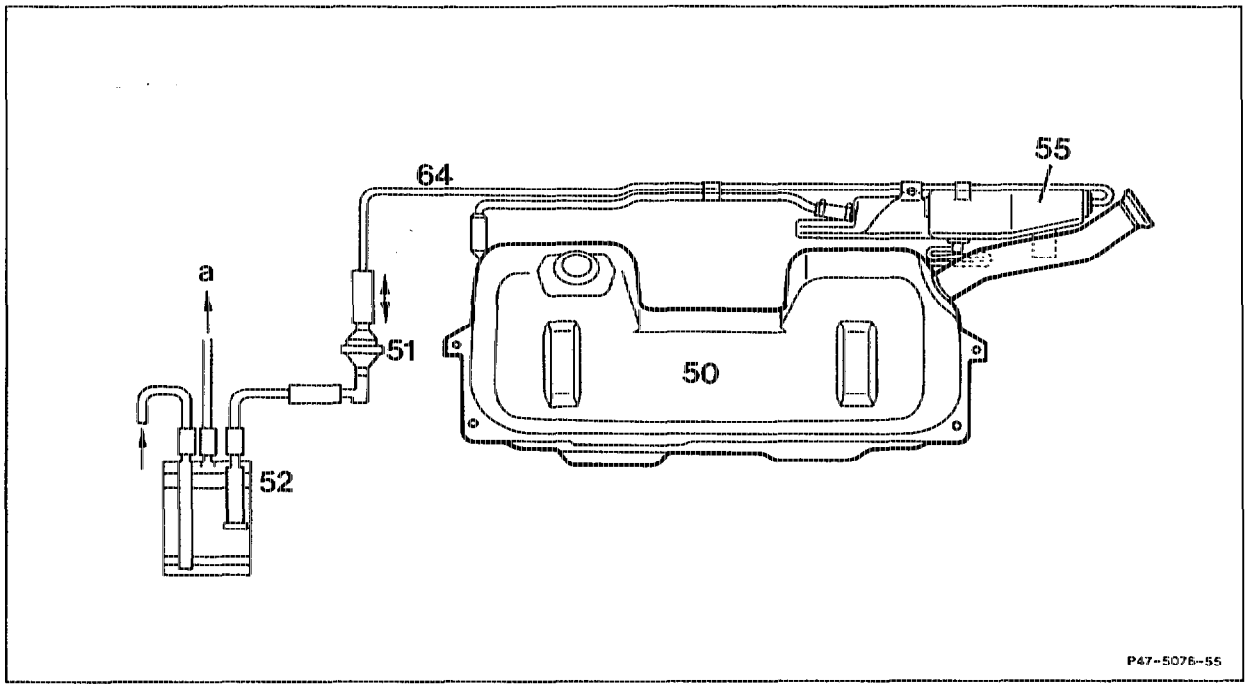

50	Fuel tank	a	To regeneration valve (see section a, c)
51	Vent valve		
52	Activated charcoal filter		
55	Expansion tank		
64	Vent line		

B. Function

Regeneration takes place provided the following conditions exist:

- coolant temperature >70 °C
- >2 minutes after starting engine
- engine not in deceleration mode.

A fuel evaporation control system is installed so that fuel vapours pass to atmosphere. The fuel vapours stored in the activated charcoal filter are drawn off at coolant temperatures >70 °C through the regeneration switchover valve (Y58/1, engine 120 Y58/2 and Y58/3) and combusted in the engine (not in deceleration mode).

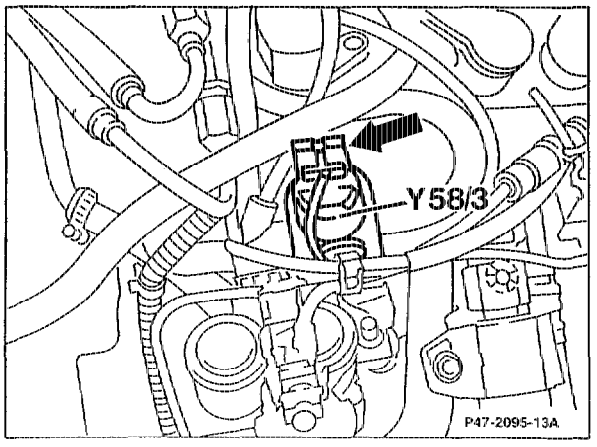

Y58/3	Right regeneration switchover valve
Arrow	Regeneration switchover valve coupling

To control the quantity regenerated, the regeneration switchover valve is actuated (pulsed) with a frequency of $7^1/_2$ Hz by the LH control unit (N3/1, engine 120 N3/2 and N3/3). The regeneration quantity is determined by the constant opening and closing of the switchover valve in on and off times of various length. The cross section in the switchover valve is altered as a function of the intake manifold vacuum by the diaphragm-guided valve needle. Testing fuel evaporation control system, see Diagnosis Manual Engine, Volume 2 LH Gasoline Injection System.

Regeneration switchover valve (Y58/1, engine 120 Y58/2 and Y58/3), deenergized closed. Valve plate opened.

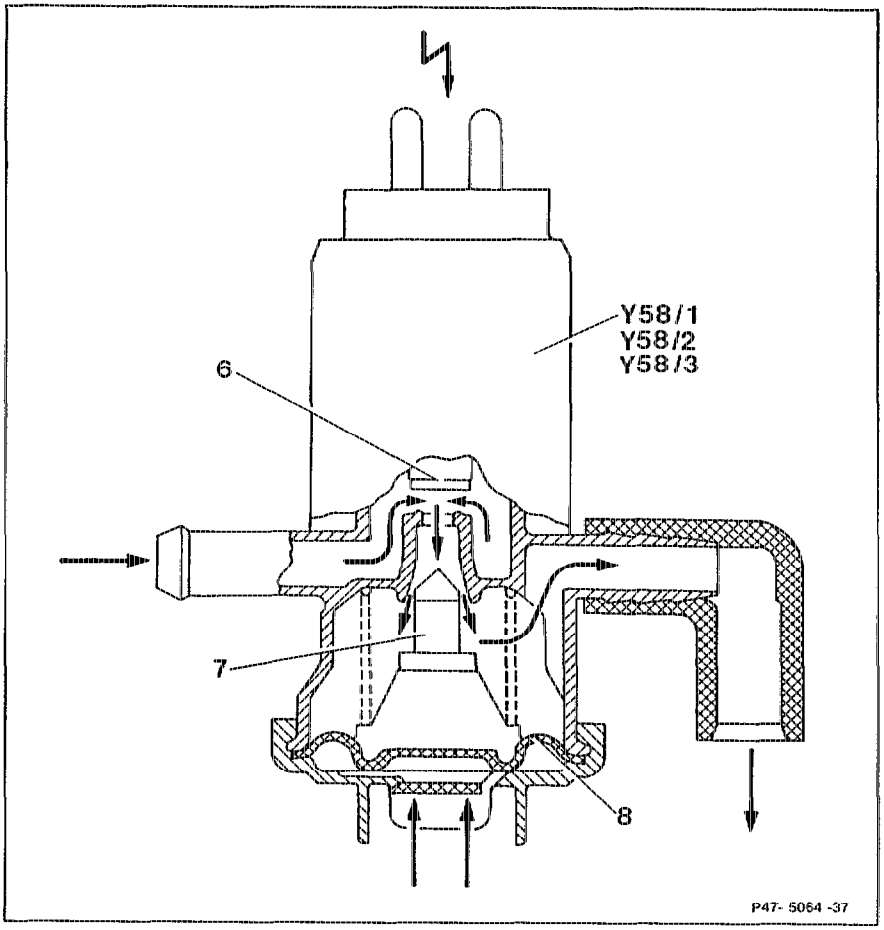

6 Valve plate
7 Valve needle
8 Diaphragm
Y58/1 Regeneration switchover valve (engine 104)
Y58/2 Left regeneration switchover valve
Y58/3 Right regeneration switchover valve

Operation no. of operation texts and work units or standard texts and flat rates:
47–4100.

A. Removing and installing guide funnel

(on all models with catalytic emissions control system)

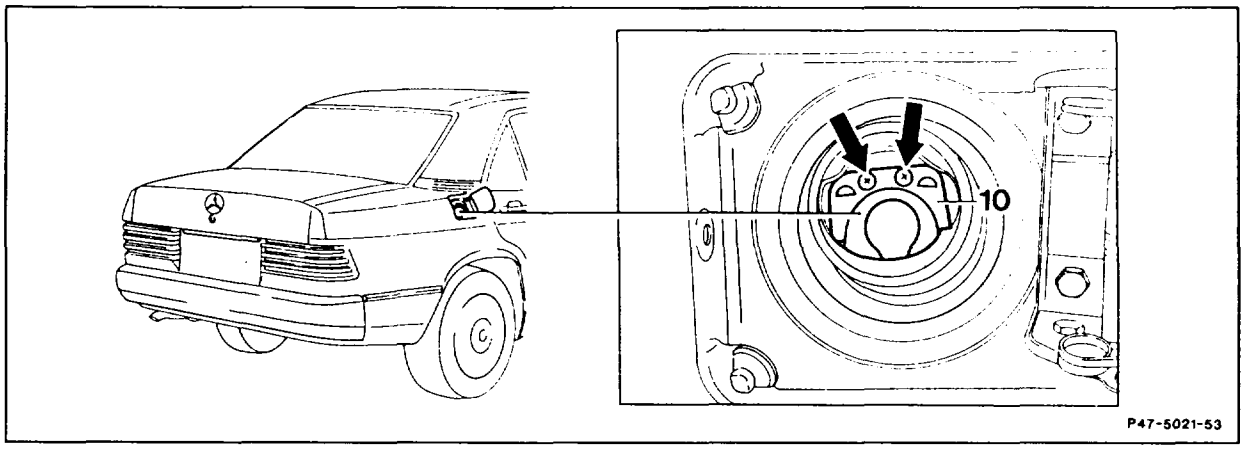

Guide funnel (10) . . . . . remove, install.

To do this, pull out the two rivets (arrows) with special tool 123 589 05 33 00, insert with drift.

⚠

Do not permit rivets to drop into fuel tank. They cancel the function of the splash bowl (fuel reserve quantity cannot be used).

Note

A guide funnel (10) is installed because of the smaller fuel dispensing nozzle for unleaded fuel. When replacing the fuel tank, a guide funnel must be installed.

Special tool

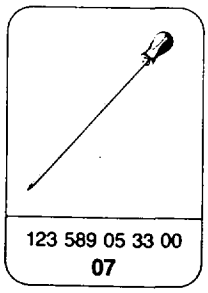

Note
Models 107, 124, 126, 201
National version (USA)
The guide funnel is provided with additional notches (arrows) to facilitate installation.

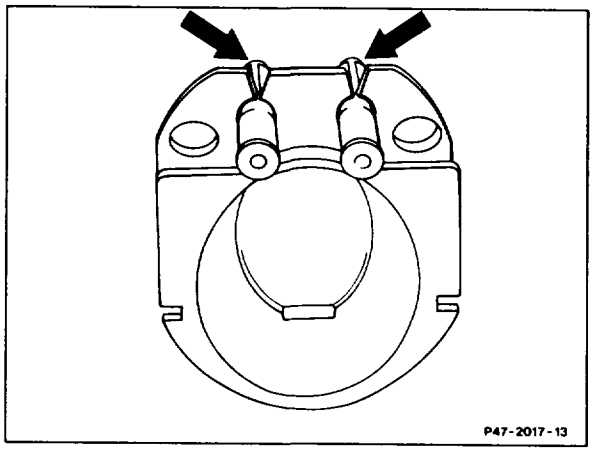

Production breakpoint: June 1989

Model	Vehicle ident end no. A/B	Vehicle ident end no. F
107	102856	–
124 Sedan	020969	–
124 Coupé	021039	–
124 Station Wagon	–	114201
126	484390	–
201	–	637121

B. Model 107

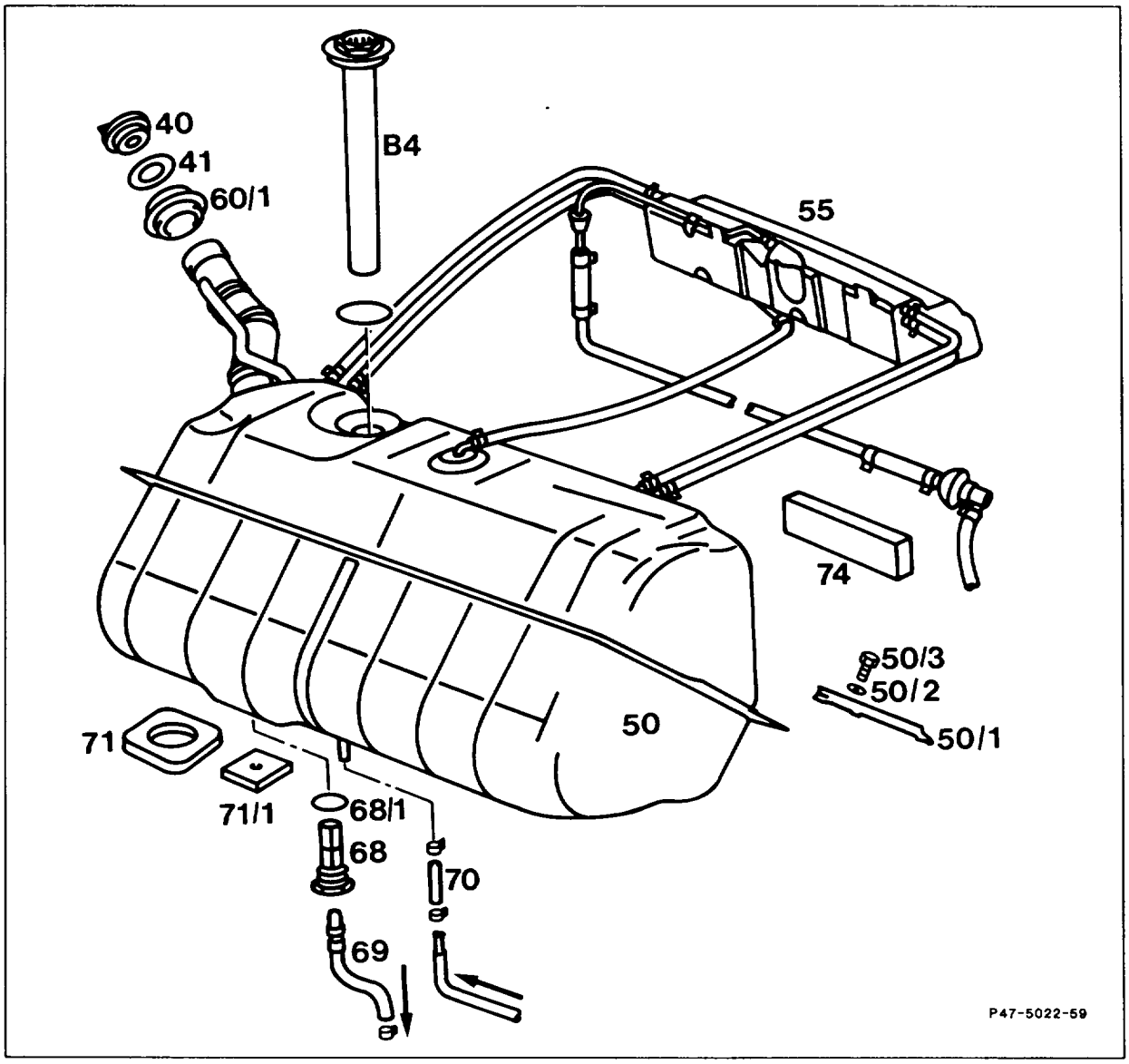

⚠

Pay attention to safety precautions. Risk of accident!

Ground cable	disconnect at battery, connect.
Pressure in fuel tank	release by removing cap (40), fitting on.
Seal (41)	check, replace if necessary.
Fuel gauge sender (B4)	remove, install (47–7000). Only when exchanging fuel tank.

Fuel expansion tank (55)	remove, install (47–8021).
Fuel tank (50)	drain. Carefully pump out fuel so that no fuel remains in the tank. Capacity approx. 85 liters.
Cup seal (60/1)	remove, insert.
Fuel feed line (69) and fuel return line (70)	take off, attach.
	Note Collect remaining fuel. Seal connections. Check suitability for reuse. Tightening torque 28 Nm (reference value).
Bolts (50/3, 4 ea.)	unscrew, screw in.
	Installation note Use washers (50/2). Tightening torque 20 Nm (reference value).
Fuel tank (50)	remove, insert.
	Installation note Stick sealing pads (71, 71/1) and soundproofing strips (74) with MB universal adhesive 000 989 92 71 if necessary. Install reinforcing plates (50/1) with reinforced side between bracket and fuel tank.
Fuel strainer (68)	remove, install. Clean and check suitability for reuse. Tightening torque 40 Nm.
	Note Remove fuel strainer with fuel tank in place. Screw M18 × 1.5 bolt with locking nut into fuel filter in place of the feed line, tighten locking nut and unscrew fuel strainer.
Seal (68/1)	replace.
Engine	run briefly. Check connections for leaks.

C. Model 124 Sedan

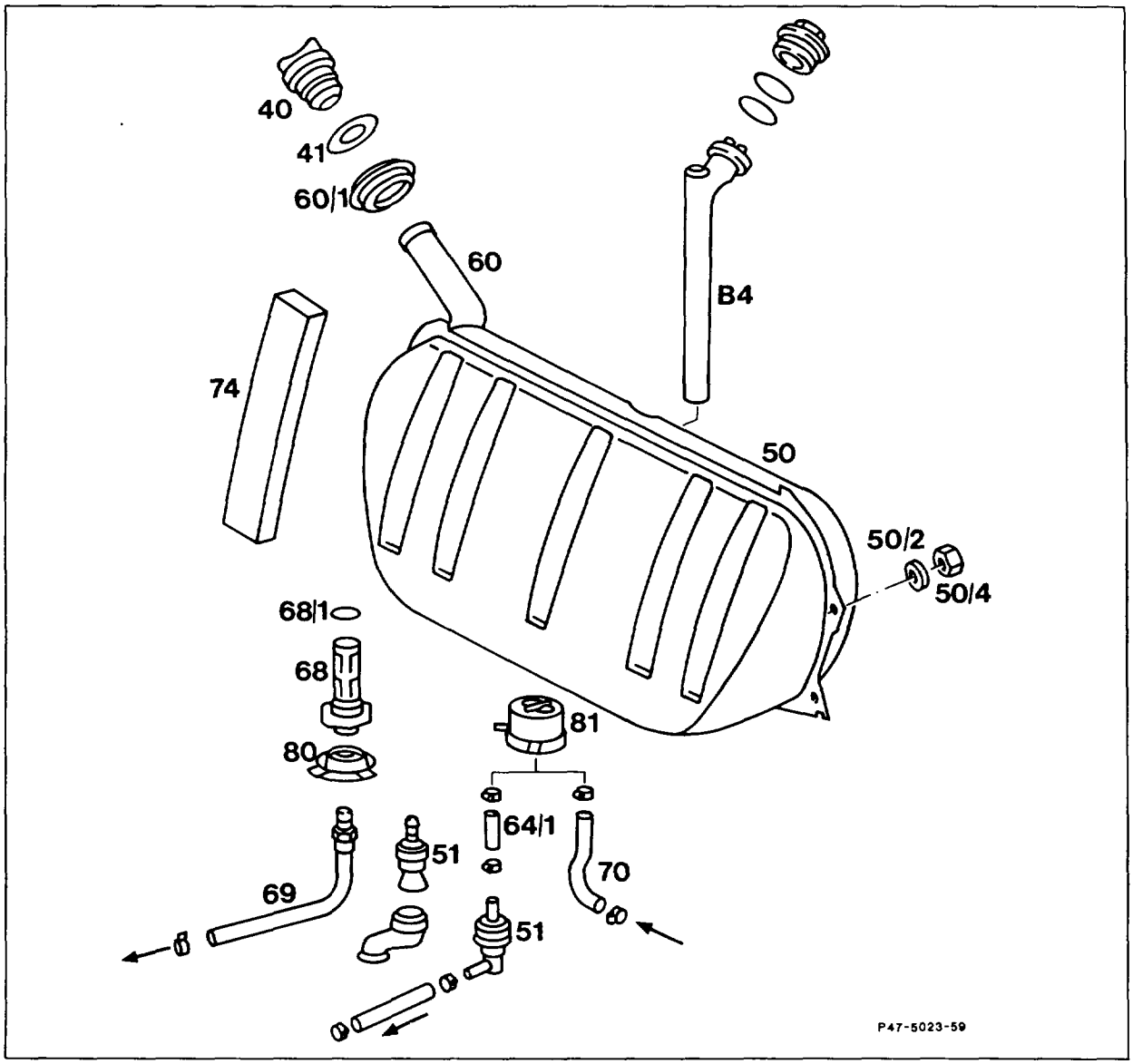

⚠
Pay attention to safety precautions. Risk of accident!

Ground cable	disconnect at battery, connect.
Pressure in fuel tank	release by removing cap (40), fitting on.
Seal (41)	check, replace if necessary.
Fuel gauge sender (B4)	remove, install (47–7000). Only if exchanging fuel tank.

Fuel tank (50)	drain. Carefully pump out fuel so that no further fuel remains in the tank. Capacity approx. 70 liters.
Cup seal (60/1)	remove, insert.
Fuel tank trim and also left and right trunk side trim	remove, install.
Fuel feed line (69), fuel return line (70), vent line (64/1), vent valve (51)	take off, fit on.
	Note Collect remaining fuel. Seal connections. Check suitability for reuse. Ensure cup seals (80, 81) are correctly seated. Tightening torque 28 Nm (reference value).
Nuts (50/4, 4 ea.)	screw down, screw up.
	Installation note Use washers (50/2). Tightening torque 20 Nm (reference value).
Fuel tank (50)	take out, insert.
	Installation note Stick sound proving strips with MB universal adhesive 000 989 92 71 if necessary.
Fuel strainer (68)	remove, install. Clean and check suitability for reuse. Tightening torque 40 Nm.
Seal (68/1)	replace.
Engine	run briefly, check connections for leaks.

Notes
Model 124
(except national version (AUS) (J) (USA))
Vent line (aluminium version) plastic-coated.

Production breakpoint

Model	Month/Year	Vehicle ident end no.
124.026/030	3–7/89	A 964095–B 045298

Model 124
Improved sealing of splash ball in fuel tank by means of O-ring. This avoids misfiring (in long right-hand curves and fuel tank less than "1/4 full").
Identification: green colored dot on bottom of filler neck.

Production breakpoint: February/March 1987

Model	Vehicle ident end no.
124	A 444663–A 448803

D. Model 124 Station Wagon

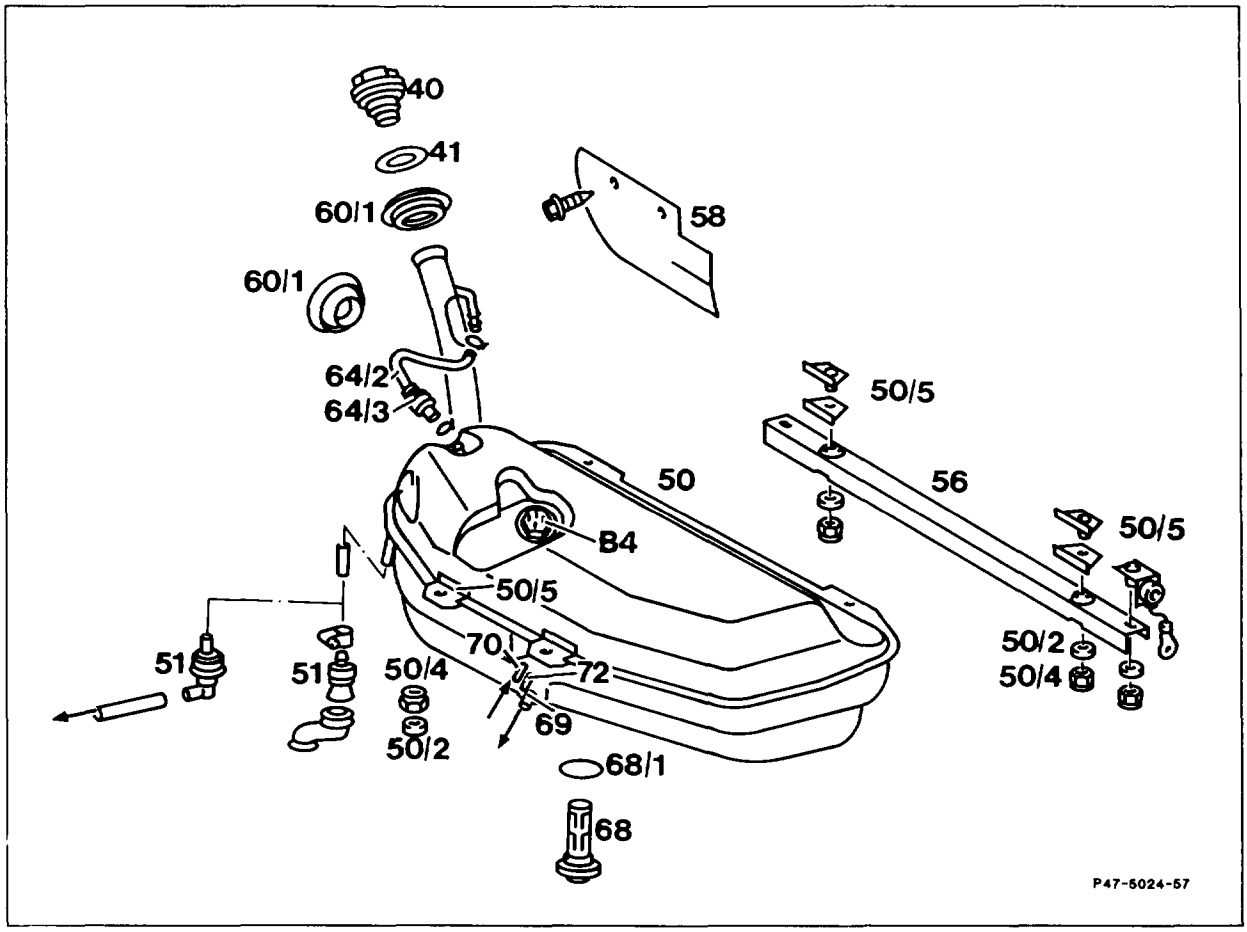

⚠

Pay attention to safety precautions. Risk of accident!

Ground cable	disconnect at battery, connect.
Pressure in fuel tank	release by removing cap (40), fitting on.
Seal (41)	check, replace if necessary.
Fuel gauge sender (B4)	remove, install (47-7000). Only if exchanging fuel tank.
Fuel tank (50)	drain. Carefully pump out fuel so that no fuel remains in the tank. Capacity approx. 72 liters.
Cup seals (60/1)	remove, insert.

Vent line (64/2)	remove, install.
	Installation note Pre-install vent line at fuel tank. Lay line with slight rise and free of kinks. Check that cup seal (64/3) is correctly seated.
Fuel feed line (69), fuel return line (70), leak line (72)	detach, fit on.
	Note Collect remaining fuel. Seal connections. Check suitability for reuse.
Vent valve (51)	detach, fit on.
Exhaust system	detach at rear suspension point, attach. Detach with V-belt.
Splasch guard (58) filler neck	remove, fit on.
Level line holder (left side)	remove, fit on.
U rail (56), attachment (50/2, 50/4, 50/5)	remove, install. Tightening torque 30 Nm. Use self-locking nuts (50/4).
	⚠ Support fuel tank when performing this step.
Fuel tank (50)	remove, insert.
	⚠ When removing fuel tank, ensure that the connection fitting for the vent line (64/2, at the filler neck) does not catch on a line. Push exhaust pipe and level line to the left.
	Installation note Stick sound proving strips between rear floor and fuel tank with MB universal adhesive 000 989 92 71

Fuel strainer (68)	remove, install, clean and check suitability for reuse. Tightening torque 40 Nm.
Seal (68/1)	replace.
Engine	run briefly. Check connections for leaks.

Note

Model 124 Sation Wagon

Vent line outlet at fuel tank bottom part (previously top part).

Production breakpoint: June 1986

Model	Vehicle ident end no.
124 T	F 014890

E. Model 126

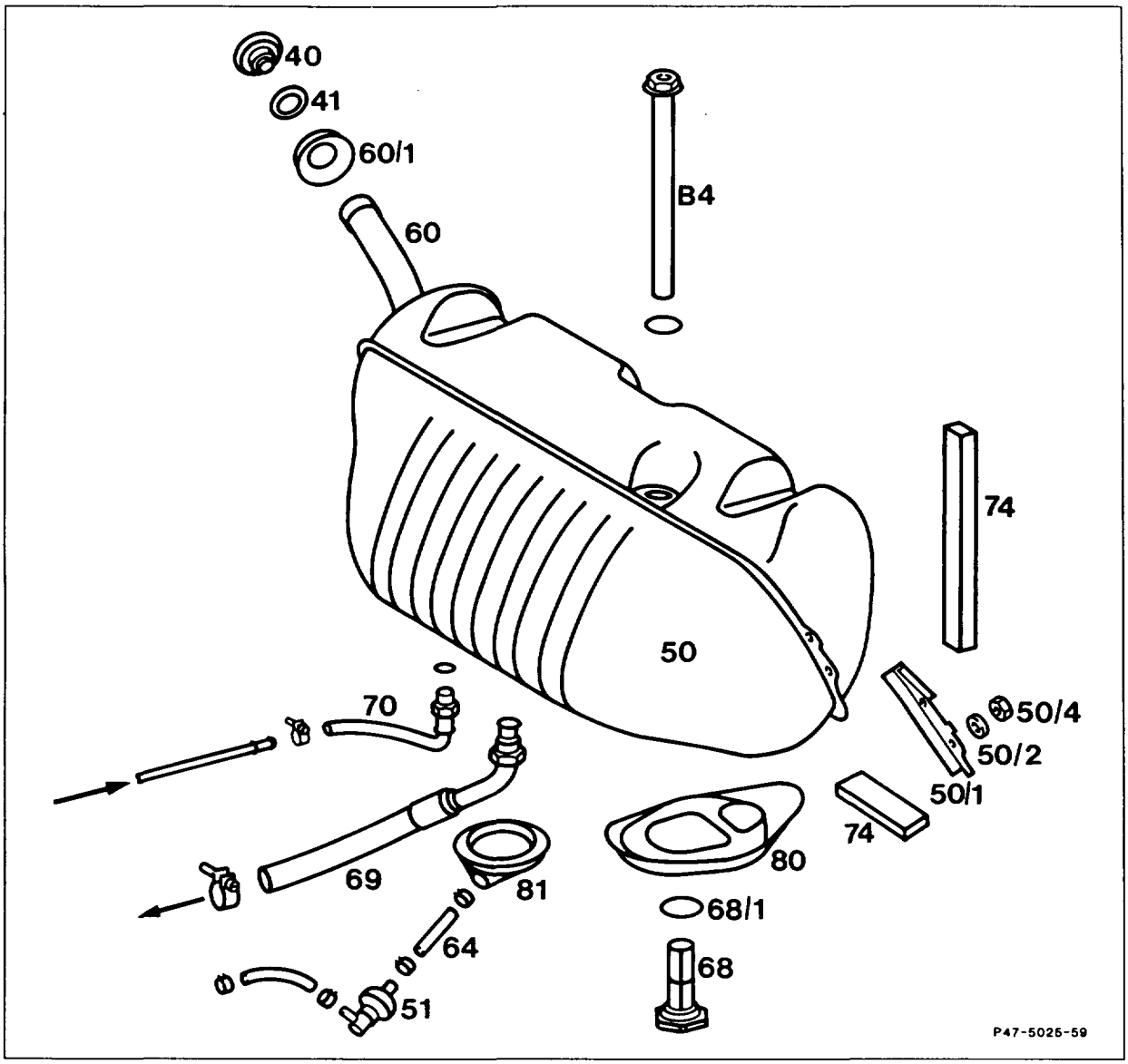

⚠
Pay attention to safety precautions. Risk of accident!

Ground cable	disconnect at battery, connect.
Pressure in fuel tank	release by removing cap (40), fitting on.
Seal (41)	check, replace if necessary.
Fuel gauge sender (B4)	remove, intall (47–7000). Only if exchanging fuel tank.

Fuel tank (50)	drain. Carefully pump out fuel so that no fuel remains in the tank. Capacity approx. 90 liters.
Cup seal (60/1)	remove, insert.
Trunk/fuel tank partition	remove, install.
Fuel feed line (69), fuel return line (70), vent valve (51)	remove, fit on.
	Note Use shortened ring wrench (shop-made tool) for fuel return line (70). Collect remaining fuel. Seal connections. Check suitability for reuse. Check that cup seals (80, 81) are correctly seated. Tightening torque 28 Nm (reference value).
Nuts (50/4, 4 ea.)	screw down, screw up.
	Installation note Use shims (50/2). Tightening torque 20 Nm (reference value).
Fuel tank (50)	remove, inset.
	Installation note Stick sound proving strip (74) with MB universal adhesive 000 989 92 71 if necessary. Install reinforcing plates (50/1) with reinforced side between bracket and fuel tank.
Fuel strainer (68)	remove, install, clean and check suitability for reuse. Tightening torque 40 Nm.
Seal (68/1)	replace.
Engine	run briefly. Check connections for leaks.

Shop-made tool
Commercially available, angled ring wrench, shortened as shown in sketch.

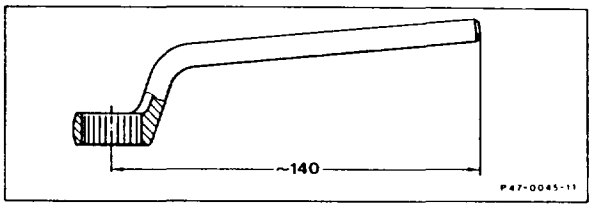

Note
Model 126, RHD
Improvement in corrosion protection through use of stainless steel for filler neck, lines and threaded flanges.

Production breakpoint: December 1987 – August 1988

Model	Engine	Vehicle ident end no.
126.020	103.941	A 383962–430586
126.024/025	103.981	A 383962–430586

F. Model 129

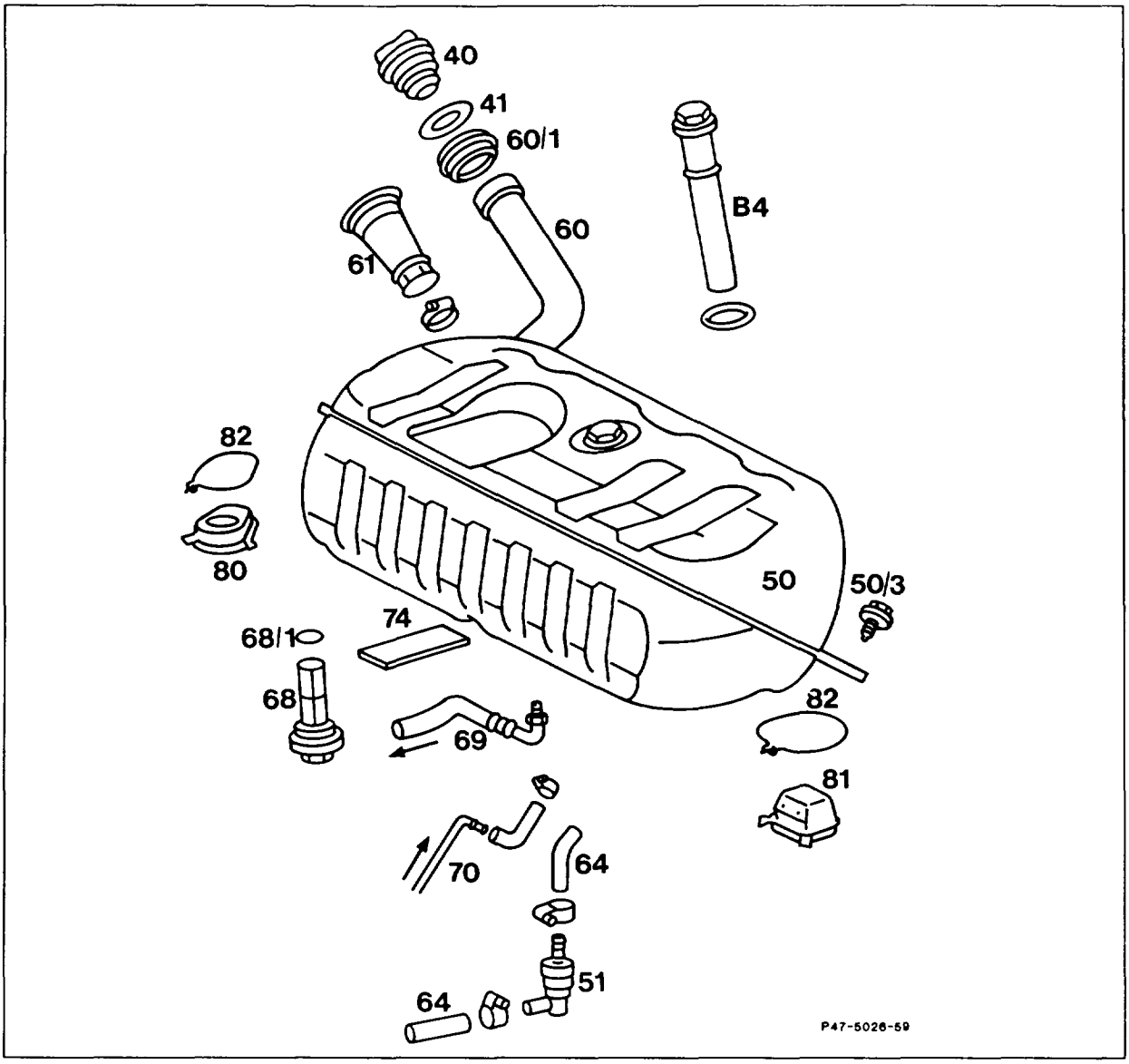

⚠
Pay attention to safety precautions. Risk of accident!

Ground cable	disconnect at battery, connect.
Pressure in fuel tank	release by removing cap (40), fitting on.
Seal (41)	check, replace if necessary.
Fuel gauge sender (B4)	remove, install (47–7000). Only if exchanging fuel tank.

Partition	remove, install.
Clip nuts for top attachment of partition	pull off, fit on.
Cover (61)	slacken, tighten, push back, pull forward.
Infrared remote control unit (N54) (if fitted)	remove, install.
Fuel tank (50)	drain. Carefully pump out fuel so that no fuel remains in the tank. Capacity approx. 80 liters.
Cup seal (60/1)	remove, insert.
Fuel feed line (69)	slacken at pump set inlet, tighten, collect remaining fuel.
Fuel feed line (69)	slacken at fuel strainer (68) with special tool 000 589 71 03 00, check suitability for reuse, tighten. Tightening torque 28 Nm (reference value).
Cup seals (80, 81), springs (82)	remove, insert.
Vent valve (51), return hose (70)	remove, fit on.
	Note To do this, detach exhaust system at the rubber rings, attach (detach with V-belt) and remove left drive shaft at inner connection flange (35–620). Collect remaining fuel. Seal connections. Check suitability for reuse.
Bolts (50/3)	unscrew, screw in.
	Installation note Use washers. Tightening torque 20 Nm (reference value).

Fuel tank (50)	remove, insert.
	Note If necessary, lever fuel tank out of the opening with plastic wedges or similar. Pull fuel tank in vehicle fully to the rear left and take out at the filler neck. If insufficient space is available, remove fuel strainer in order to install fuel tank and re-install afterwards from below. Stick sound proving strips (74) MB universal adhesive 000 989 92 71 if necessary.
Fuel strainer (68)	remove, clean, check for suitability for reuse, install. Tightening torque 40 Nm.
Seal (68/1)	replace.
Engine	run briefly. Check connections for leaks.

Special tools

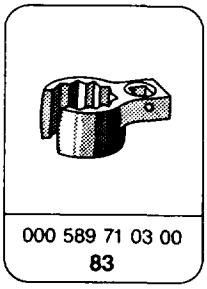

000 589 71 03 00
83

Location of components

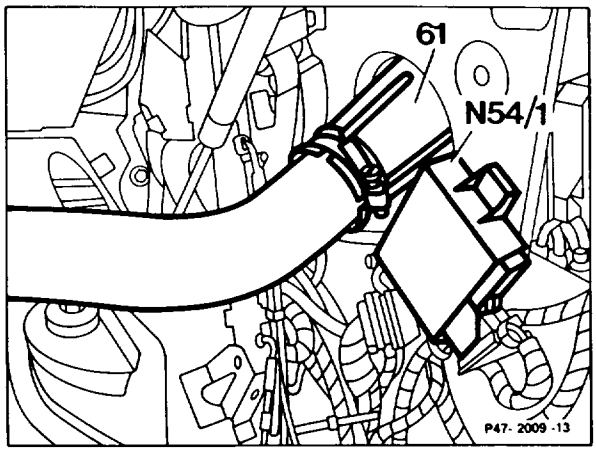

61 Cover
N54 Infrared remote control (IFZ) control unit

Diagram of fuel tank
- removing (sequence a, b)
- inserting (sequence b, a by analogy)

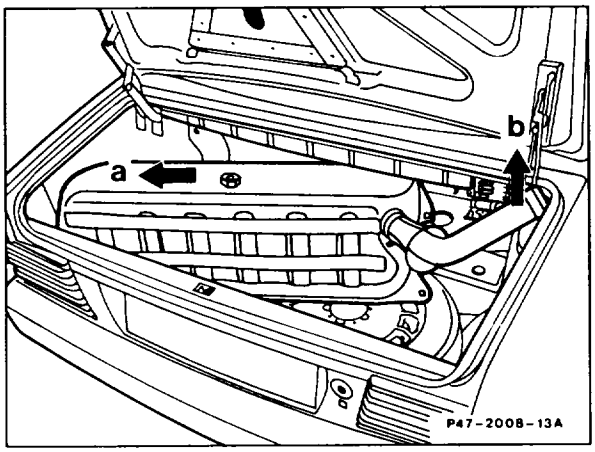

G. Model 201

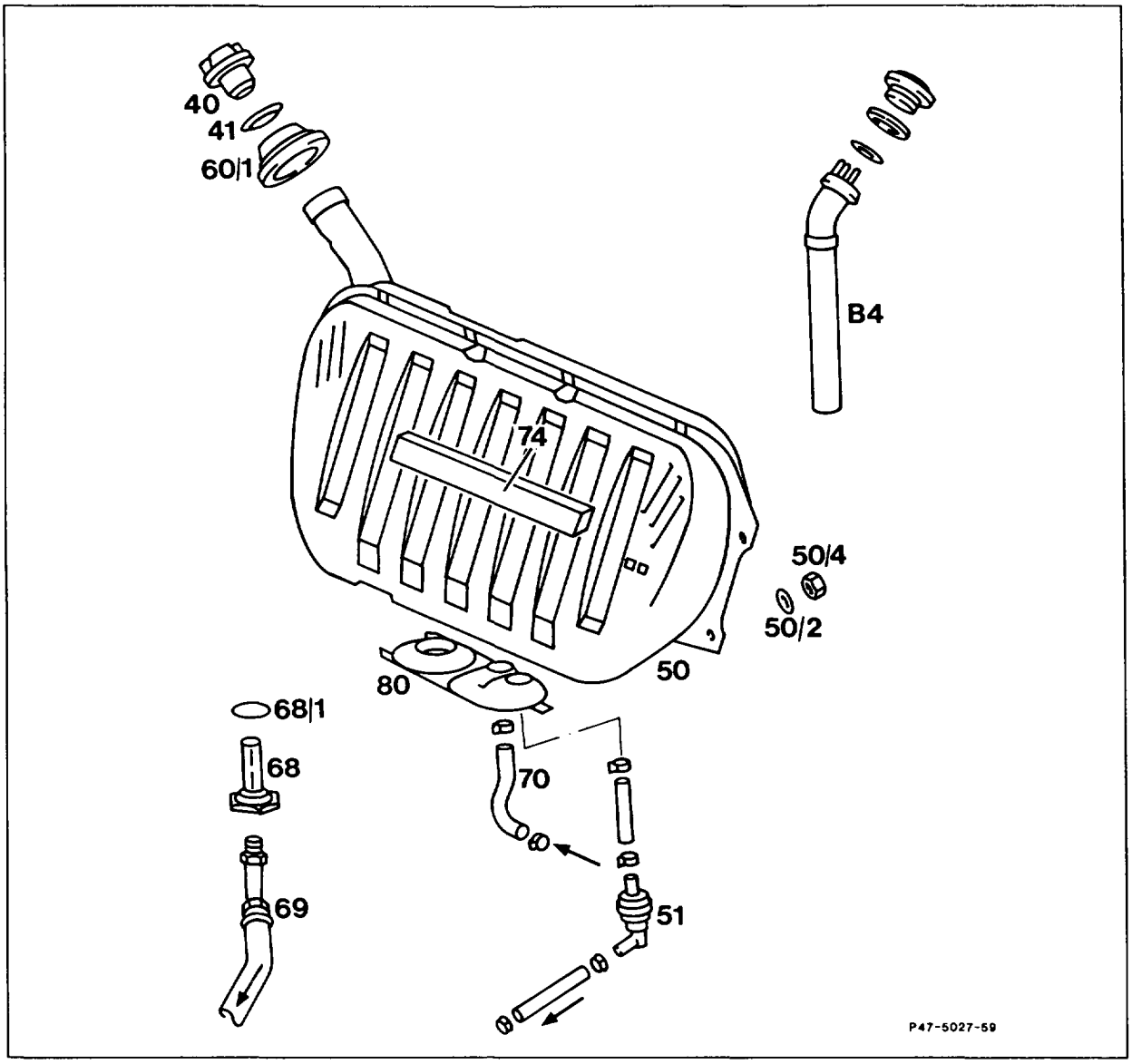

⚠

Pay attention to safety precautions. Risk of accident!

Ground cable	disconnect at battery, connect.
Pressure in fuel tank	release by removing cap (40), fitting on.
Seal (41)	check, replace if necessary.

Fuel tank (50)	drain. Carefully pump out fuel so that no fuel remains in the tank. Capacity approx. 55 or 70 liters, respectively.
Cup seal (60/1)	remove, insert.
Fuel tank trim	remove, install.
Fuel gauge sender (B4)	remove, install (47–7000). Only if exchanging fuel tank.
	Note In the case of plastic fuel tanks only 1 seal between fuel gauge sender (B4) and fuel tank.
Fuel feed line (69), fuel return line (70), vent valve (51)	take off, fit on.
	Note Collect remaining fuel. Seal connections. Check suitability for reuse. Ensure cup seal (80) is correctly seated. Tightening torque 28 Nm (reference value).
Nuts (50/4, 4 ea.)	turn down, turn up. In the case of plastic fuel tank, unscrew tensioning strap, screw on, see repair note.
	Installation note Use washers (50/2). Tightening torque 20 Nm (reference value).
Fuel tank (50)	remove, insert.
	Note pull out drain hose slightly upward and run behind the edge of the fuel tank. After installing fuel tank, lay drain hose properly again. Stick sound-deadening strips (74) with MB universal adhesive 000 989 92 71 if necessary.

Fuel strainer (68)	remove, clean, check suitability for reuse, install. Tightening torque 40 Nm.
Seal (68/1)	replace.
Engine	run briefly. Check connections for leaks.

Repair notes

Since 09/1988 the contours of the fuel tanks have been adapted to the modified space conditions.
Capacity approx. 55 and 70 liters, reserve quantity approx. 6.5 and 8 liters, respectively.
The 70-liter fuel tank is available in place of the 55-liter fuel tank as optional equipment, with the exception of (AUS) (J) (USA).

The 55-liter fuel tank is made either of sheet steel or plastic. Only the sheet steel fuel tank is supplied to the countries (AUS) (J) (USA).

Fuel tanks as of model care (09/1988) cannot be installed in fuel tanks manufactured prior to this date.

The plastic fuel tanks has other cup seals at the rear floor and filler neck than the sheet steel fuel tank.

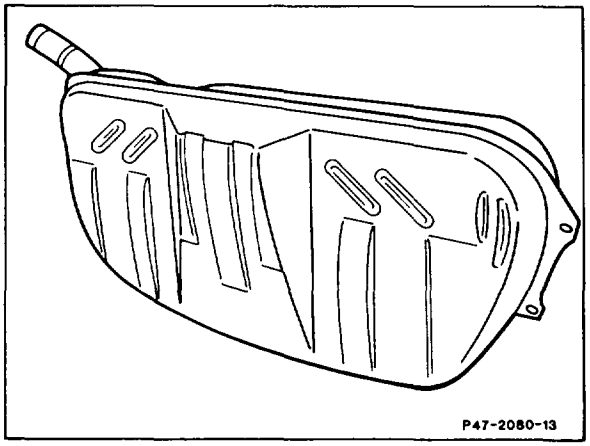

55-liter sheet steel fuel tank

When installing the tensioning strap (50/4), tighten the nuts (50/3) only slightly at first. Then, tighten the tensioning bolt (arrow) to 10 Nm. Following this, tighten the nuts (50/3) to 21 Nm.

Note
For replacements, only the plastic fuel tank with tensioning strap is supplied with the exception of the countries (AUS) (J) (USA).

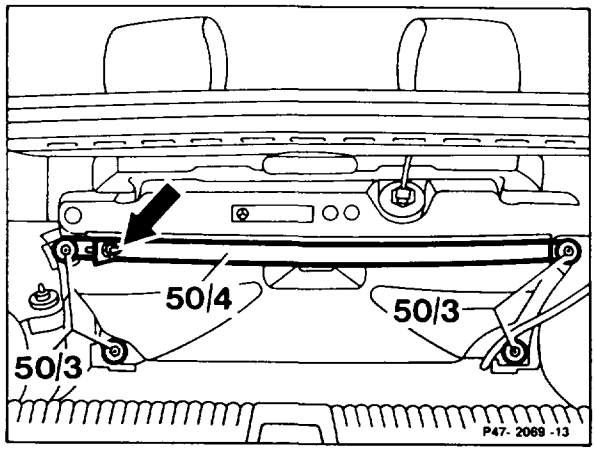

55-liter plastic fuel tank

Note
Model 201
(except national version (AUS) (J) (USA))
Plastic fuel tank.

Production breakpoint

Model	Engine/Year	Vehicle ident end no.
201.029	3–4/89	A 494377–498372
201.029	6/89	A 506044

Note re model 201.029
Check clearance between fuel hose (intake hose) and inner ring mass of left input shaft (minimum clearance 20 mm). The vehicle must be standing on its wheels ready for the road when performing this check.
If the clearance is insufficient, swivel fuel hose (69) in direction indicated by arrow until the clearance of 20 mm is achieved.
Tighten bolt connection (28 Nm).

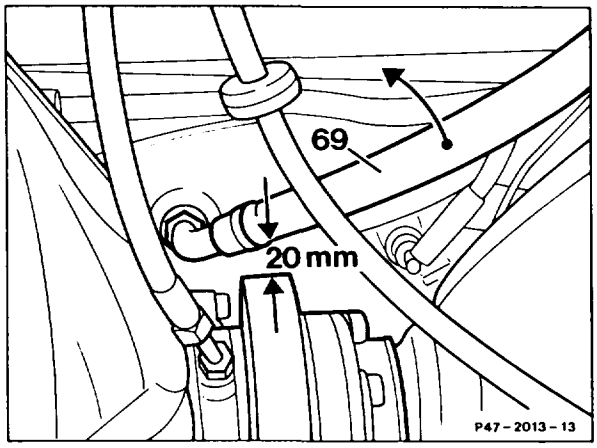

47-7000 Removing and installing fuel gauge sender

Operation no. of operation texts and work units or standard texts and flat rates:
47-7000.

A. Model 107

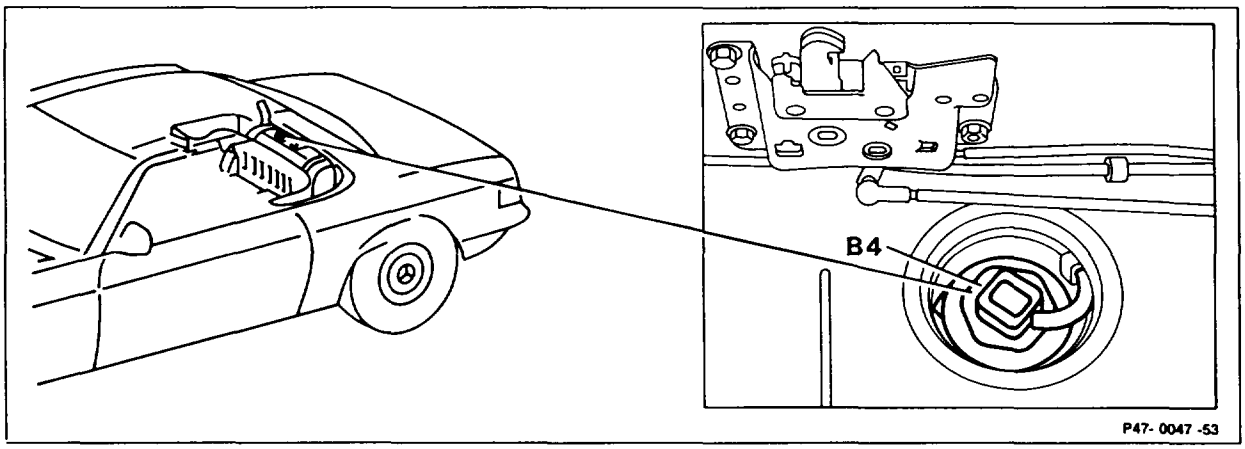

Battery ground cable	disconnect, connect.
Hardtop	take off, fit on.
Soft top	open, close.
Cover	unclip, clip in place.
Coupling at fuel gauge sender (B4)	unplug, secure against slipping off, plug in.
Fuel gauge sender (B4)	remove, run empty if necessary, install. Replace seal. Remove securing pin below adhesive strip (of new part). Tightening torque 40 Nm.

B. Model 124 Sedan, 201

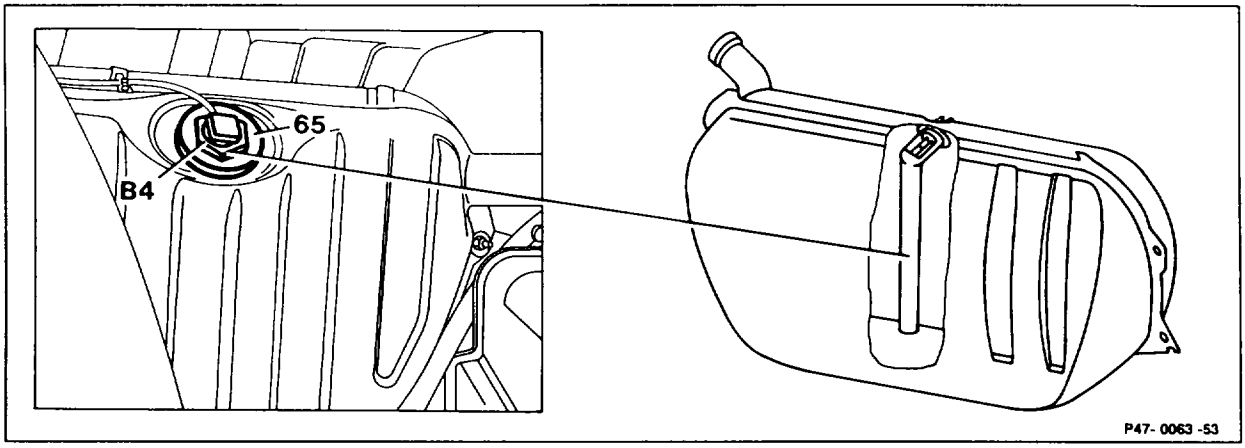

Battery ground cable	disconnect, connect.
Fuel tank trim	remove, install.
	Model 201
	Remove fuel tank trim only partially.
Coupling at fuel gauge sender (B4)	unplug, plug in. Secure against slipping off.
Sealing flange (65)	unscrew, screw on.
	Note
	If fuel tank full, pump out approx. 8 liters beforehand.
	In the case of sheet steel fuel tank, replace both seals at sealing flange (65).
Fuel gauge sender (B4)	remove, run empty if necessary, install.
	Remove securing pin below adhesive strip (only new part).
	On model 201, plastic fuel tank, replace seal between sender (B4) and fuel tank.
	Tightening torque 40 Nm.

C. Model 124 Station Wagon

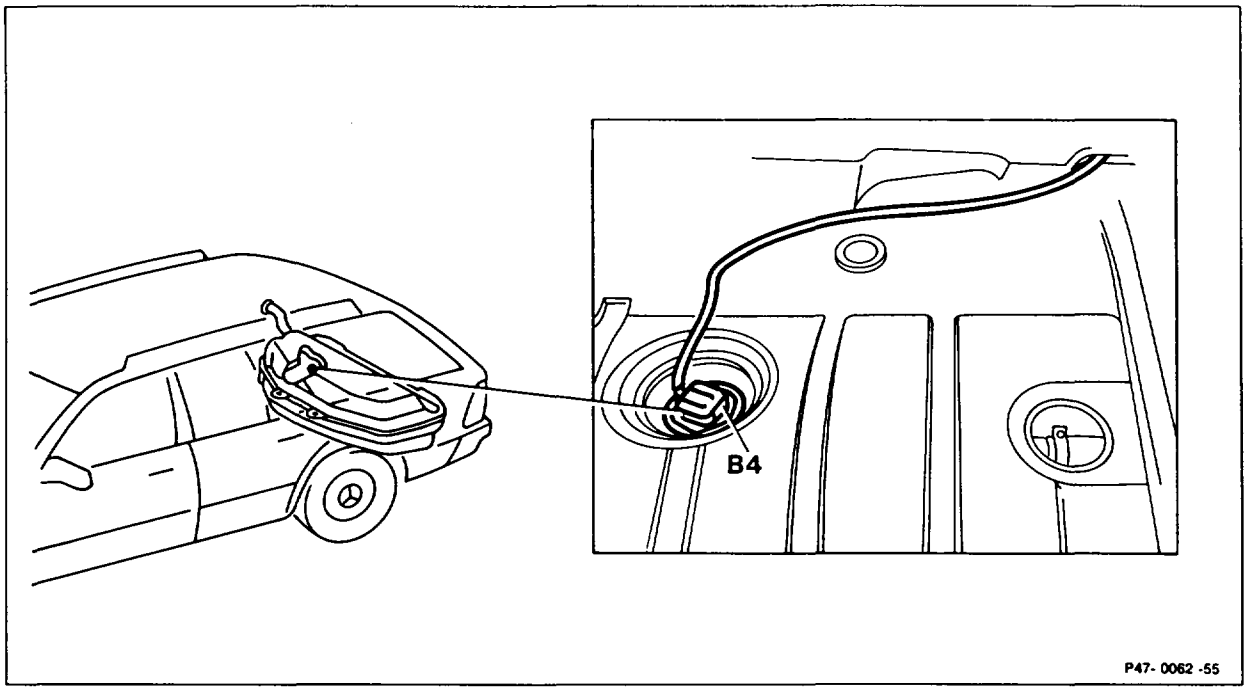

Battery ground cable	disconnect, connect.
Front load area flap or 3rd bench seat back rest	remove, install.
Load area trim	partially remove, install.
Cover	unclip, clip in place.
Coupling at fuel gauge sender (B4)	unplug, plug in.
Fuel gauge sender (B4)	remove, run empty if necessary, install. Replace seal. Remove securing pin below adhesive strip (only new part). Tightening torque 40 Nm.

D. Model 126

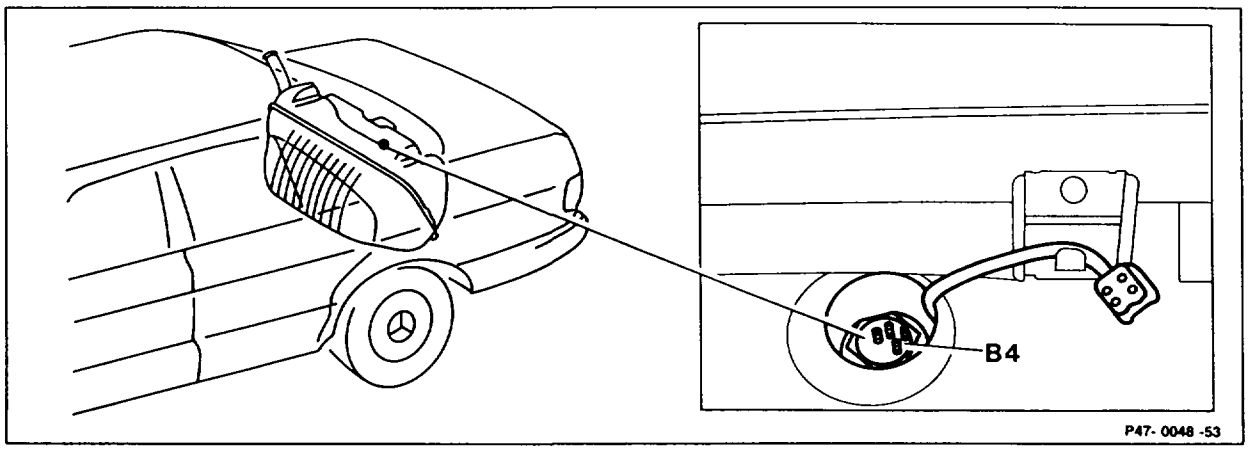

Battery ground cable	disconnect, connect.
Back rest of rear bench seat	remove, install (91–170).
Cover	unclip, clip in place.
Coupling at fuel gauge sender (B4)	unplug, secure against slipping off, plug in.
Fuel gauge sender (B4)	remove, run empty if necessary, install. Replace seal. Remove securing pin below adhesive strip (only new part). Tightening torque 40 Nm.

E. Model 129

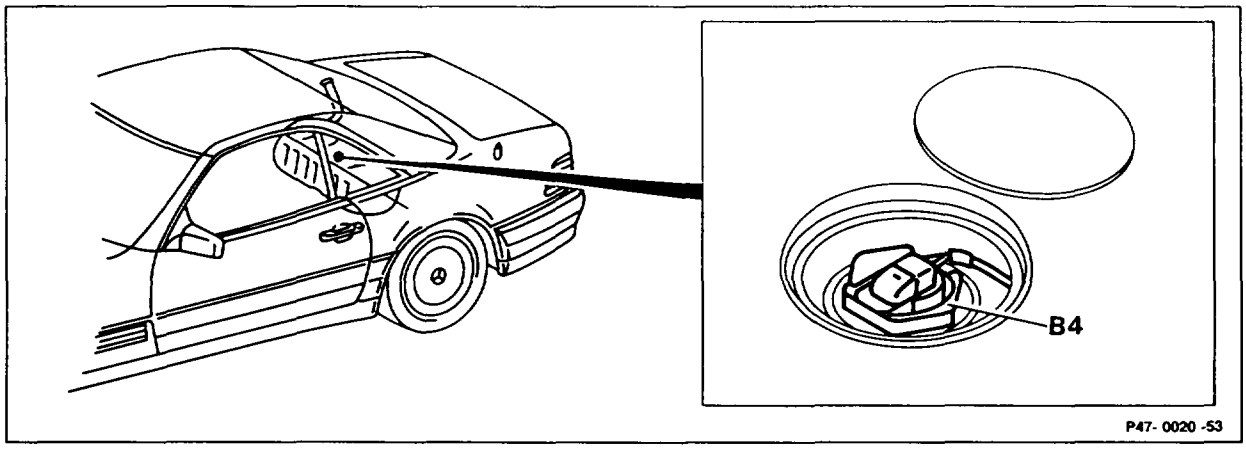

Battery ground cable	disconnect, connect. To do this, remove right side trim in trunk, install.
Hardtop	take off, fit on.
Soft top	open, close.
Cover	unclip, clip in place.
Coupling at fuel gauge sender (B4)	unplug, secure against slipping off, plug in.
Fuel gauge sender (B4)	remove, run empty if necessary, install. Replace seal. Remove securing pin below adhesive strip (only new part). Tightening torque 40 Nm.

Operation no. of operation texts and work units or standard texts and flat rates:

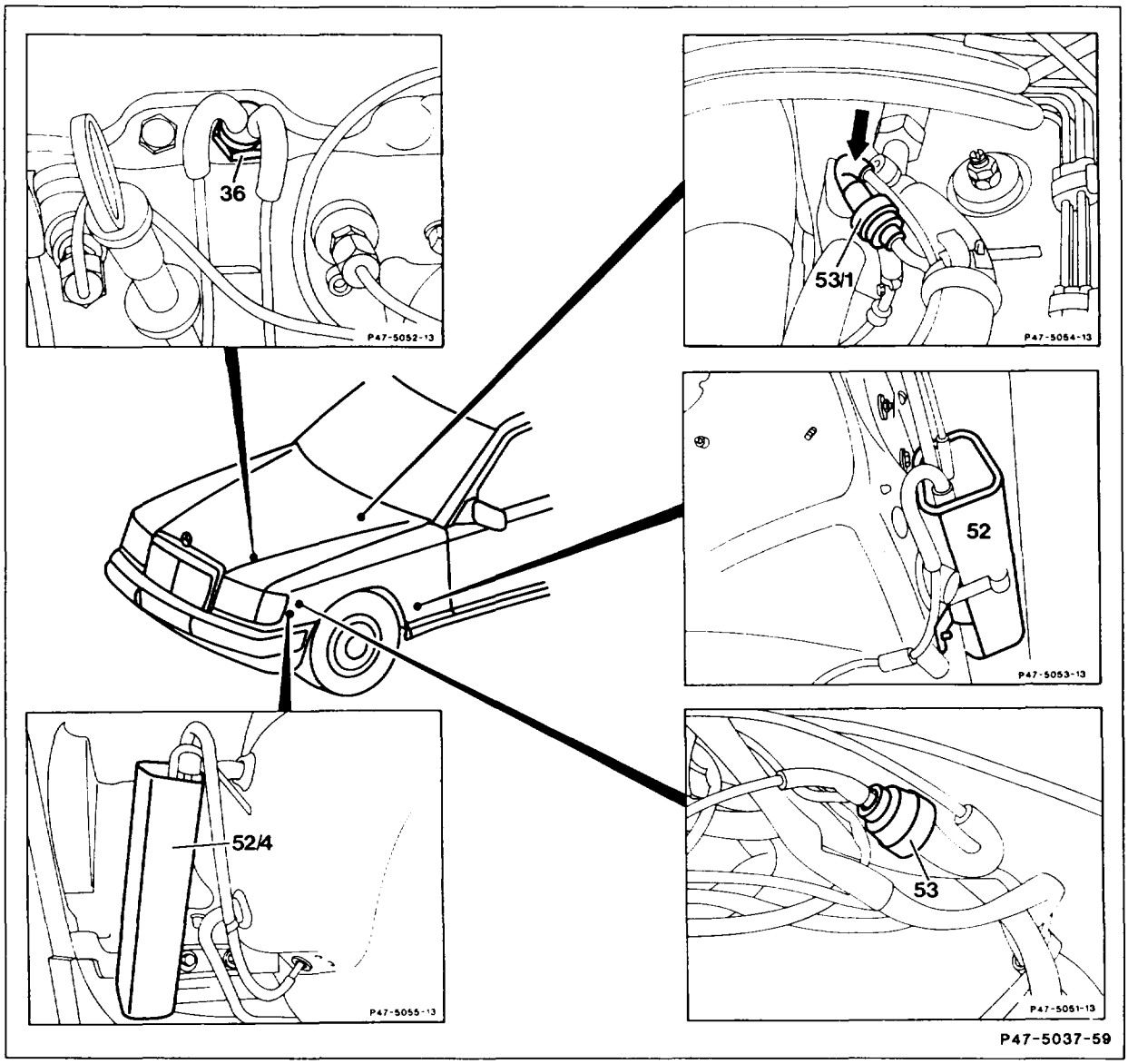

Location of components: models 107, 124, 126 and 201

36	50°C red thermovalve	52/4	Activated charcoal filter 107 (in front left wheelhouse)
52	Activated charcoal filter, models 124, 126, 201 (in front left wheelhouse)	53	Regeneration valve, models 107, 126, 201

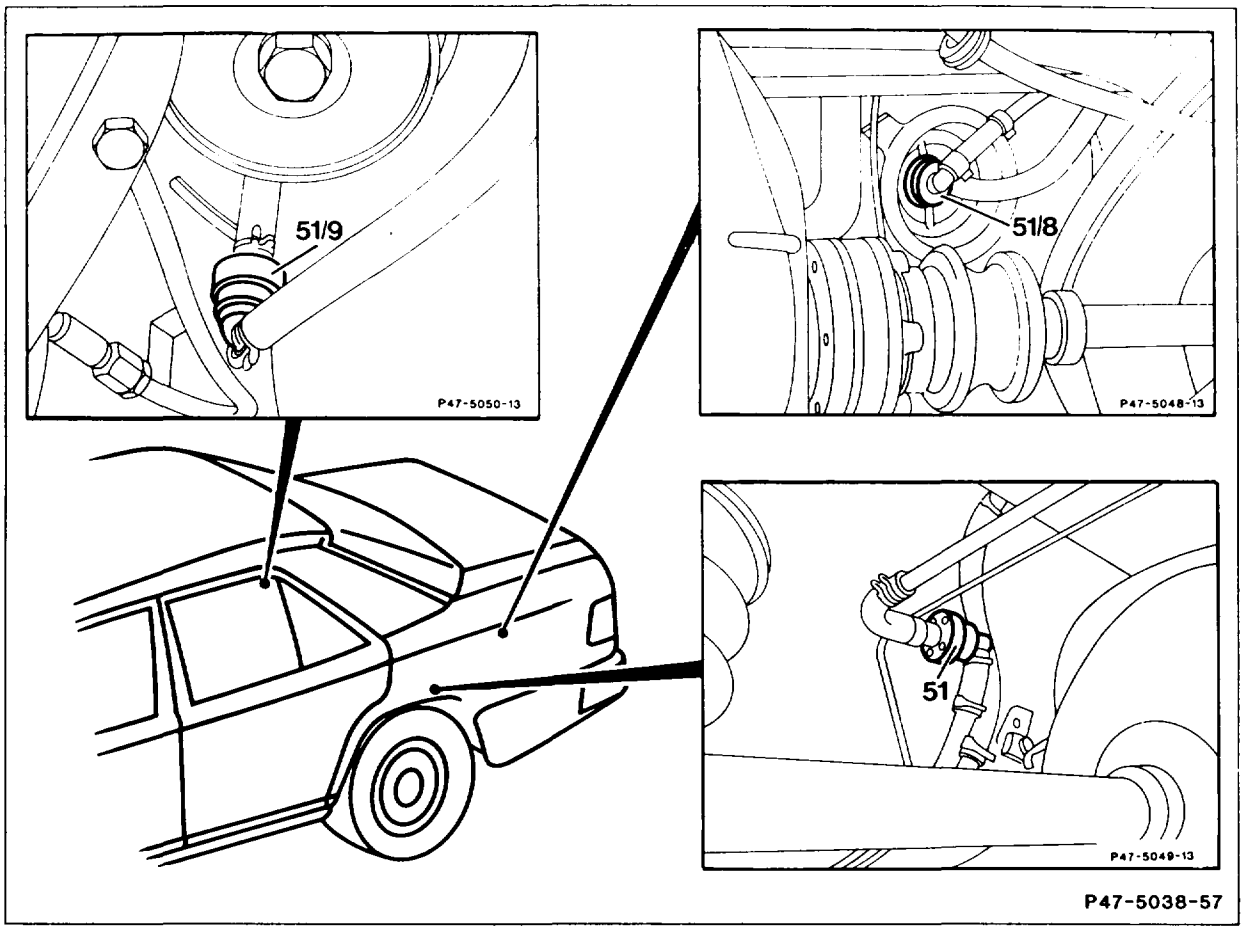

Location of components: models 107, 124, 126 and 201

51	Vent valve, model 107
51/8	Vent valve, models 124 Sedan, 126, 201
51/9	Vent valve, model 124 Station Wagon

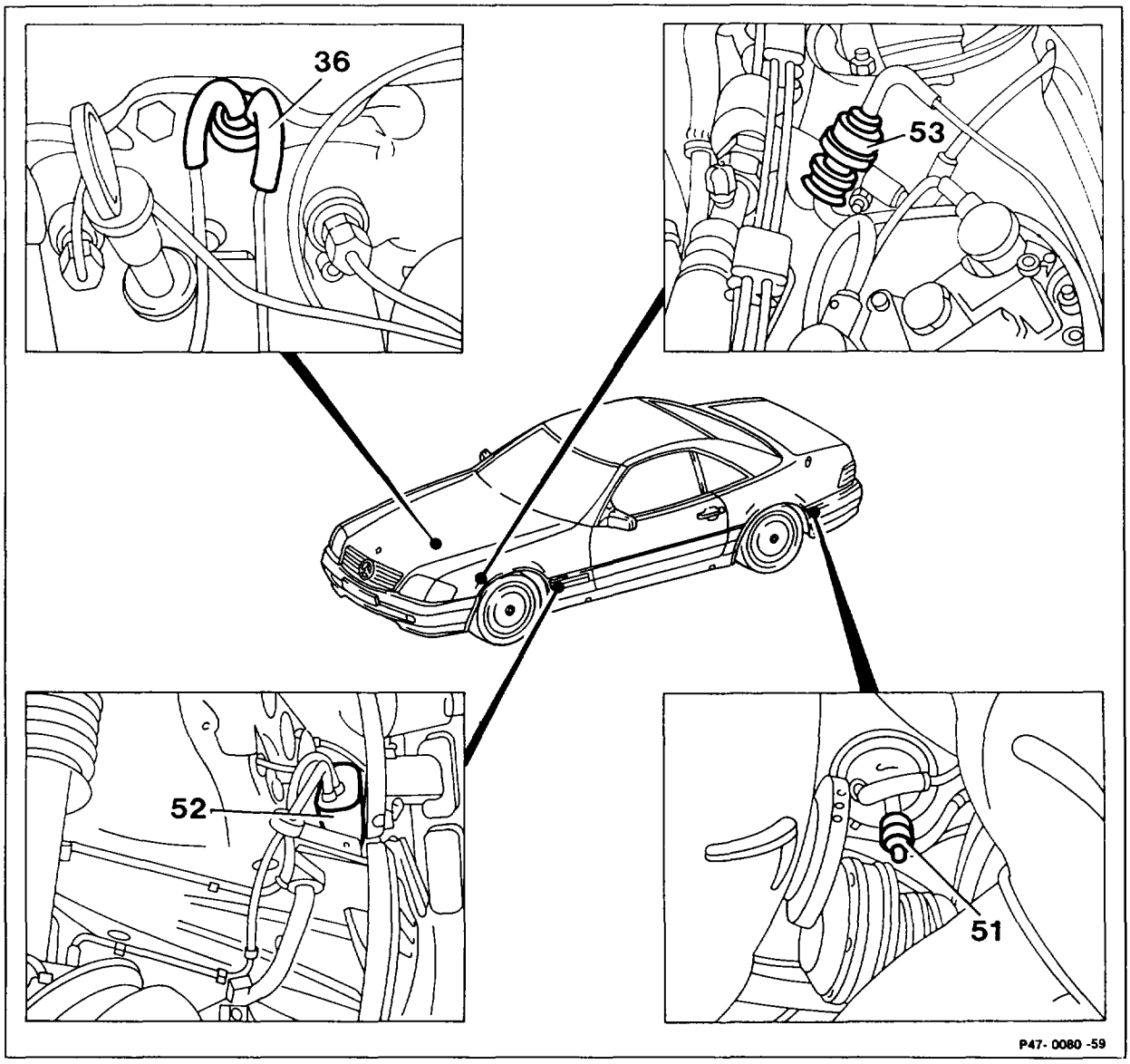

Location of components: model 129

36	70°C black thermovalve with white edging	52	Activated charcoal filter
51	Vent valve	53	Regeneration valve

Engine at operating temperature	approx. 80°C engine oil temperature. Special tool (018), 124 589 07 21 00.
Regeneration valve (53 or 53/1)	detach from black line to activated charcoal filter and slowly increase engine speed to approx. 3000/min. At idle speed, no extraction. Extraction occurs as engine speed rises.
Thermovalve (36, in sensor block)	check if passage blocked.

Vacuum lines (white/black and white/violet/black) .	check that they are correctly connected at the throttle valve body and at thermovalve (36). Check condition.
Vent valve (51, 51/8, 51/9)	test operation. Connect tester 201 589 13 21 00 to connection fitting to fuel tank (pressure 30–50 mbar, vacuum 1–16 mbar).
Lines	check from fuel tank via vent valve (51, 51/8, 51/9), activated charcoal filter (52, 52/4, remove bulkhead if necessary), regeneration valve (53) to throttle valve body (black)
Activated charcoal filter (52, 52/4)	check. The connections must be clear to each other.

Special tools

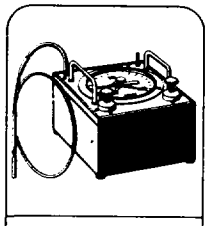

201 589 13 21 00
00 42 80

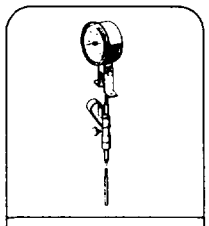

124 589 07 21 00
18

Repair note

- **Models 126, 201**
  Since 09/87 the housing of the activated charcoal filter has been made of plastic (previously sheet steel). When replacing parts, it is only permitted to replace like with like.

- **Model 124**
  The regeneration valve (53/1) has been attached to the partition of the left component compartment since 09/87.
  The regeneration line runs from the activated charcoal filter through the engine components compartment to the regeneration valve and throttle valve body.

up to 08/1987 located at left wheelhouse

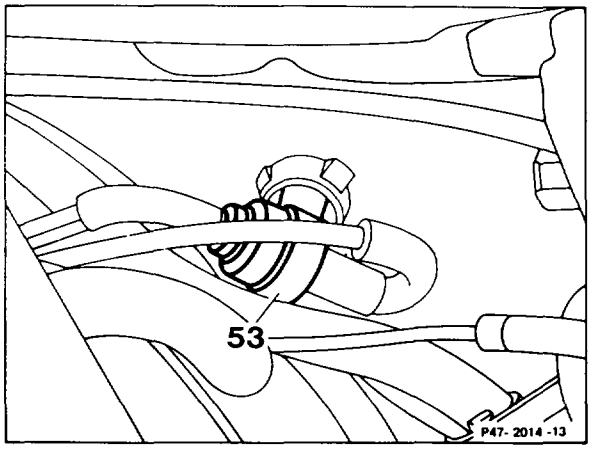

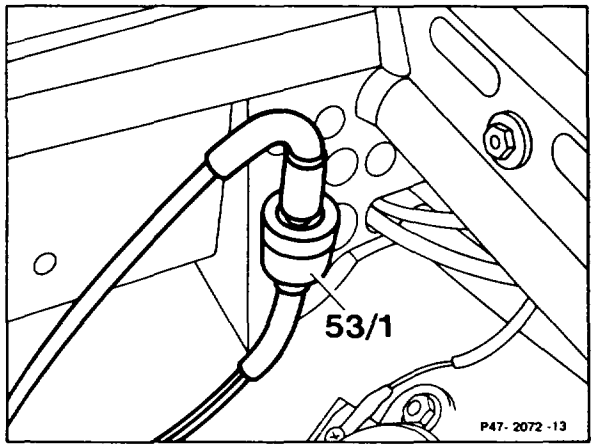

as of 09/1987 located at left partition

Notes
Models 107, 124, 126, 201
Fuel evaporation control system.
Thermovalve for regeneration modified to 70°C (previously 50°C).

Production breakpoint: August 1987

Model	Engine	Engine end no. manual transmission	Engine end no. automatic transmission
107.041	103.982	001571	006696
124.026	103.940	015305	031059
124.030/050/090	103.983	016764	085607
124.226	103.943	000091	000188
124.230/290	103.985	000400	001402
126.020	103.941	002786	008992
126.024/025	103.981	004674	038230
201.029	103.942	005709	008435

Model 124
Fuel evaporation control system

Production breakpoint: March 1987

Model	Vehicle ident end no.
124	A 470552 F 036428

47-8212 Removing and installing activated charcoal filter

Operation no. of operation texts and work units or standard texts and flat rates:
47-8212.

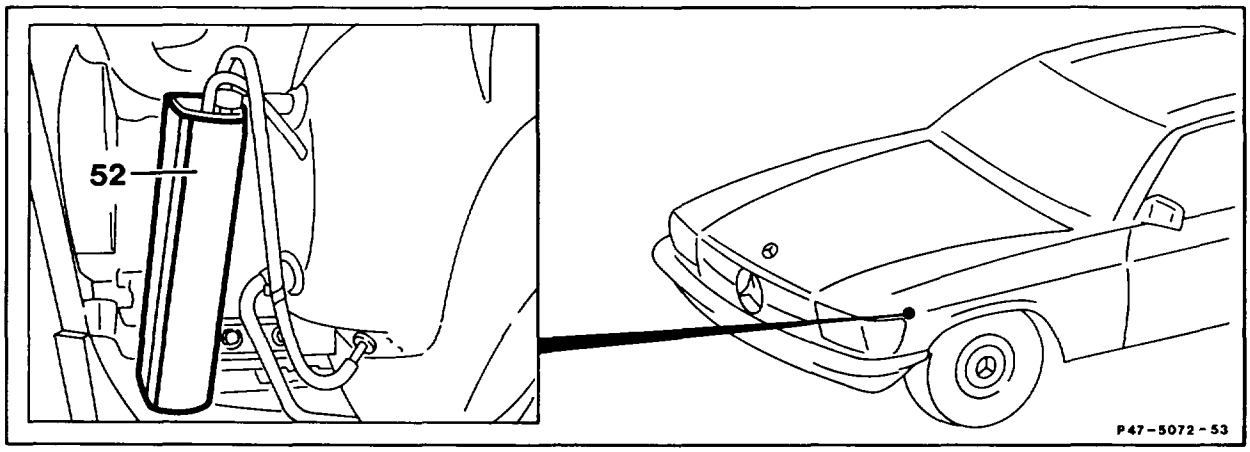

Model 107

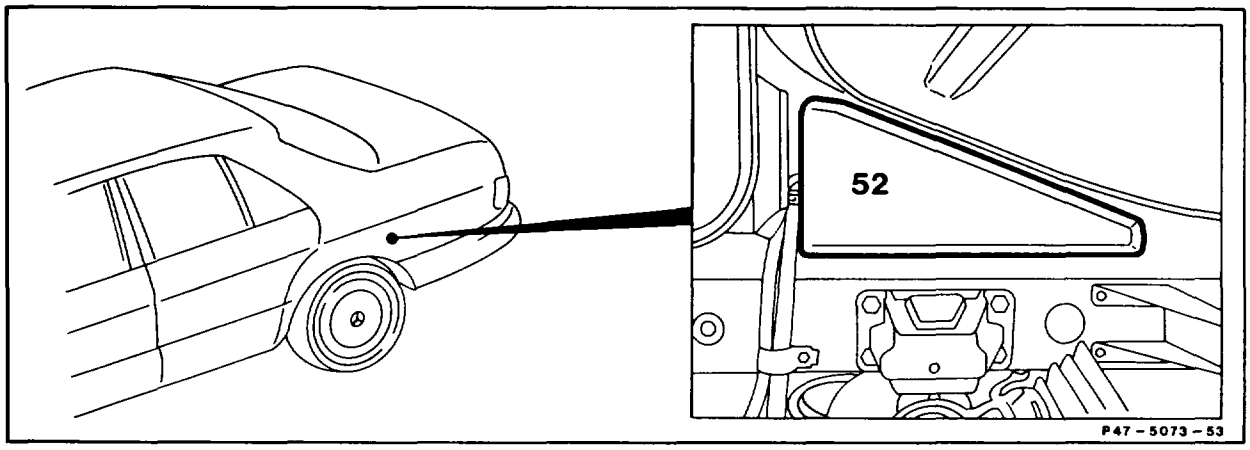

Model 126 with ASR

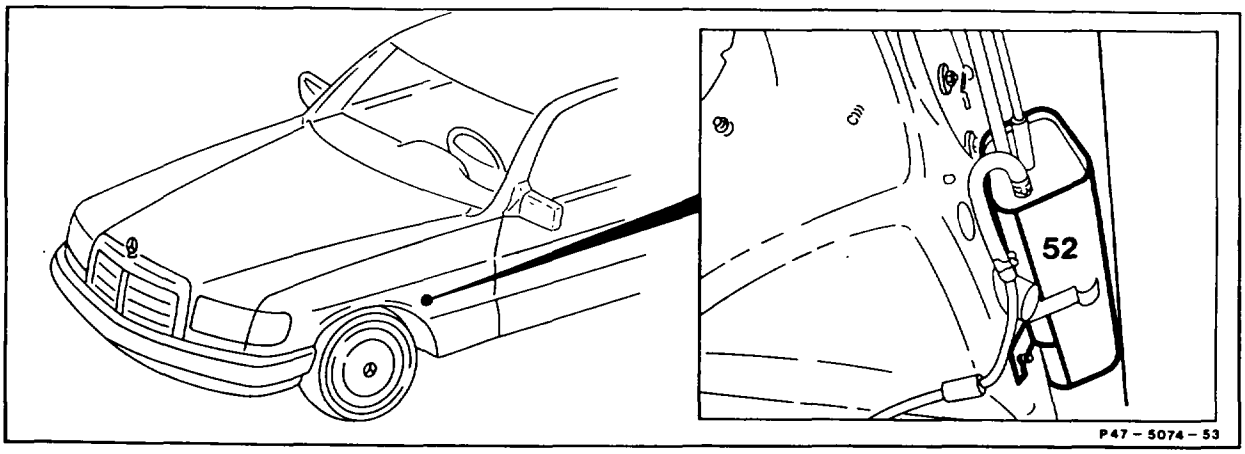

Model 124, model 126 without ASR, model 201

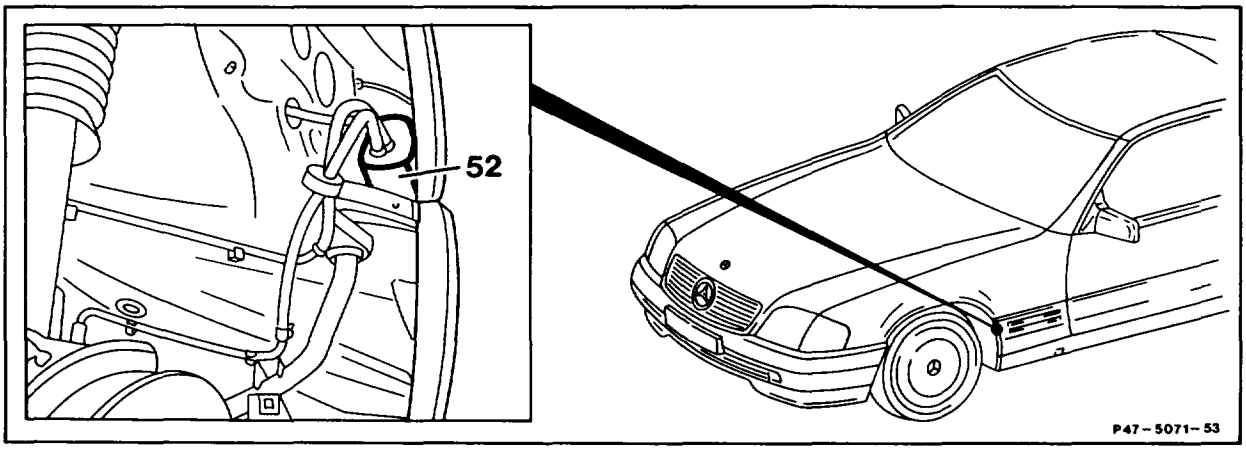

Model 129

Left front wheel	unscrew, screw on. Pay attention to tightening torque of wheel bolts (see RI 40–110).
Front left inner fender	remove, install.
Lines and wiring at activated charcoal filter (52)	detach, fit on.
Activated charcoal filter (52)	pull out upward, insert from top to bottom.

Note

On vehicles with ASR up to 08/1989 the activated charcoal filter (52) is located below the rear floor. The fuel tank is vented by the air-permeable floor of the activated charcoal filter.

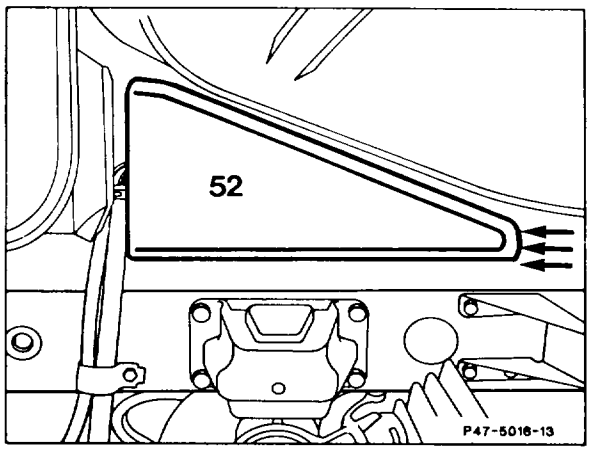

47–8252 Removing and installing regeneration switchover valve (fuel evaporation)

Operation no. of operation texts and work units or standard texts and flat rates:
47–8252.

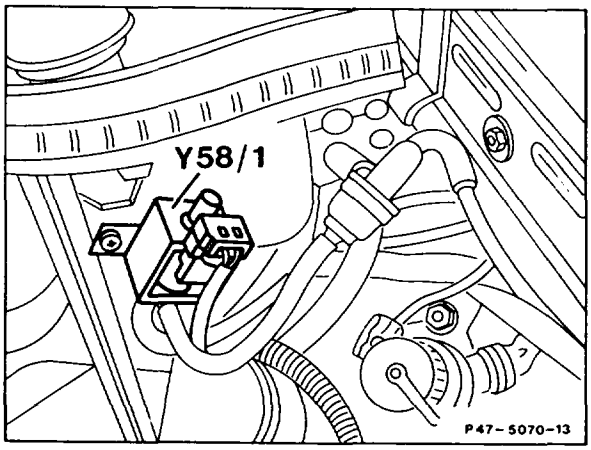

Model 124

Electric coupling at regeneration switchover valve	unplug, plug in.
Both regeneration lines	at regeneration switchover valve (Y58/1) detach, fit on.
Screw	unscrew, screw in.
Regeneration switchover valve (Y58/1)	remove, insert.
KE control unit fault memory	Read, erase if necessary (see Diagnosis Manual Engine, Volume 2, Register 0).

Note
Stored faults which may occur as a result of disconnected cables or simulation during test work, must be erased in the fault memory after completing all work.

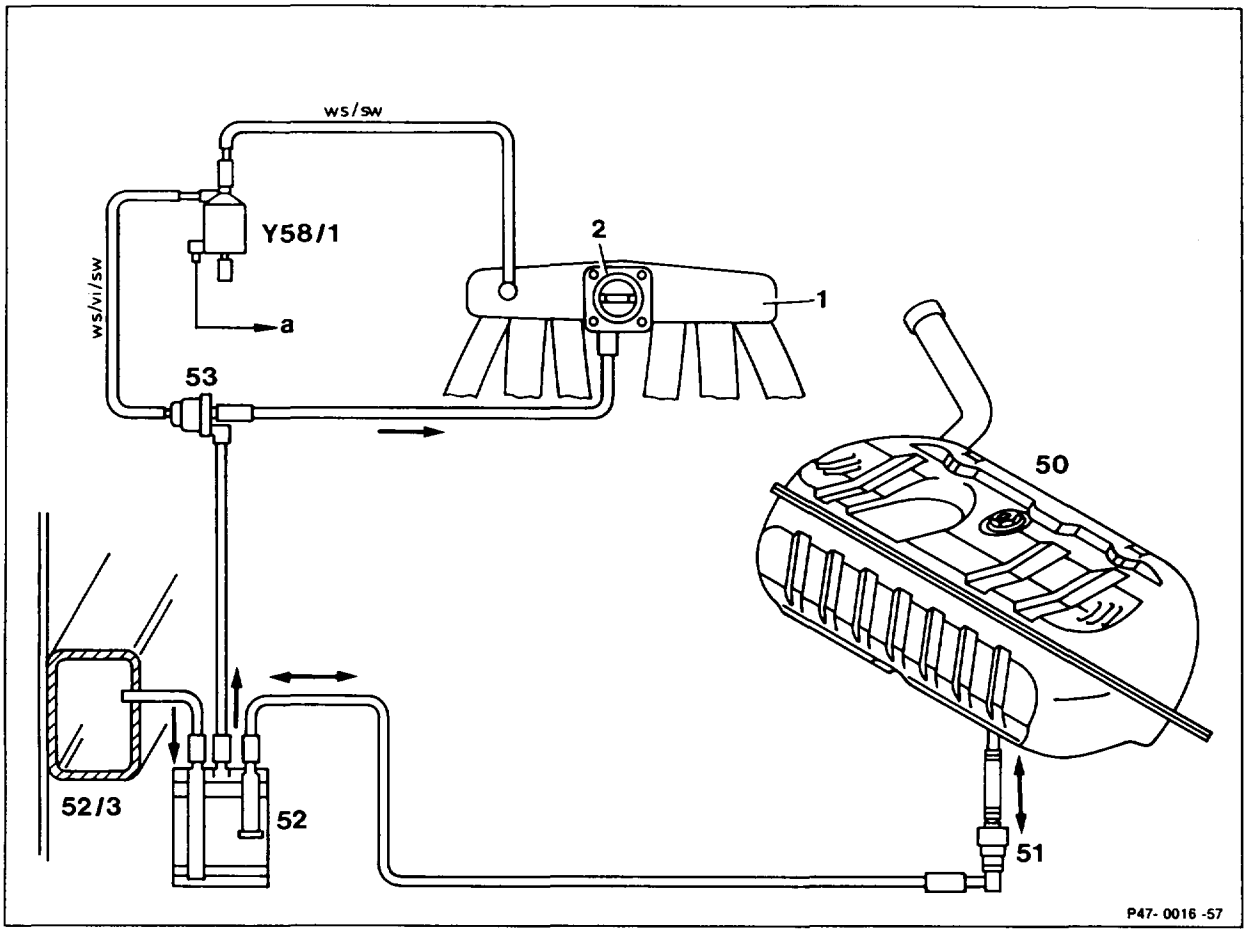

Function diagram of fuel evaporation control system

1	Intake manifold	52/3	Side member (only model 129)
2	Throttle valve body	53	Regeneration valve
50	Fuel tank	Y58/1	Regeneration switchover valve
51	Vent valve		
52	Activated charcoal filter	a	To KE control unit

Note

Model 124

Vent line (plastic-coated) between vent valve and activated charcoal filter made of aluminium (previously steel).

Production breakpoint: February–March 1988

Model	Engine	Vehicle ident end no. A
124.026	103.940	697836-730116
124.030	103.983	697836-730116

Retightening exhaust flange

4970

All models

Note: When performing this job number, the engine compartment lower panel or the noise encapsulation panel must be removed, and replaced after completing all maintenance work (refer to job number 6190 or 9400).

Retighten bolts/self-locking nuts of exhaust flange connections. Torque to 20 Nm.

On vehicles with V-engines, retighten exhaust flange connections on left and right sides.

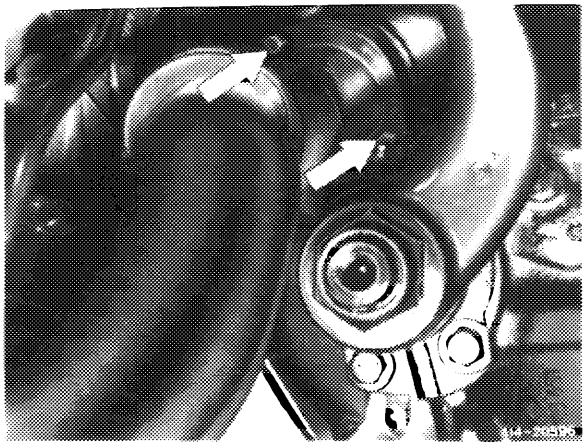

Model 107.025.045 048 (left hand side)

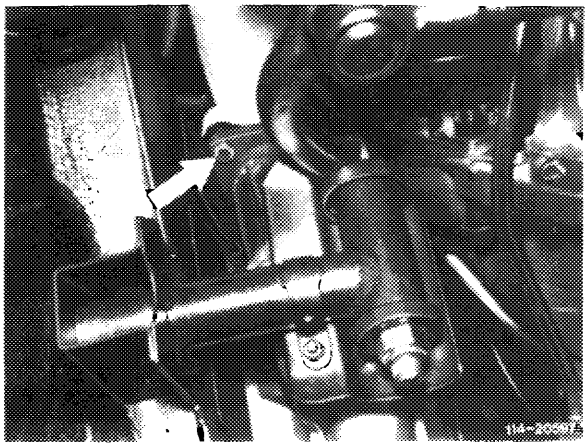

Model 107.025/045/048 (right hand side)

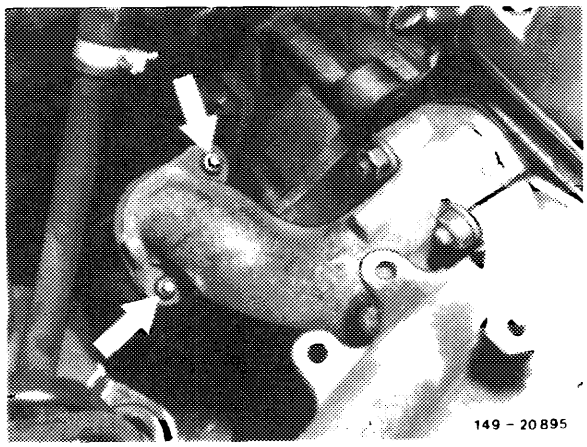

Model 123.123/130/150/190

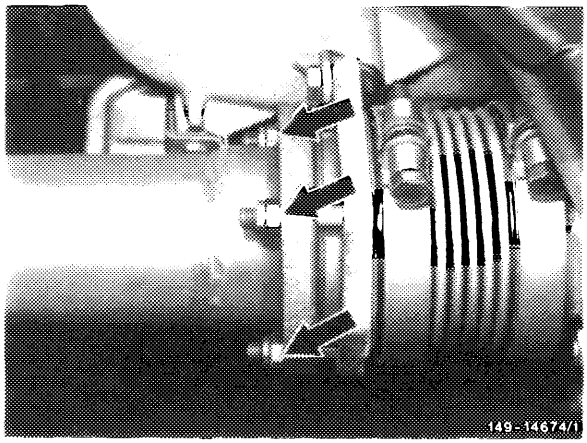

Model 123.133/153/193, 126.1

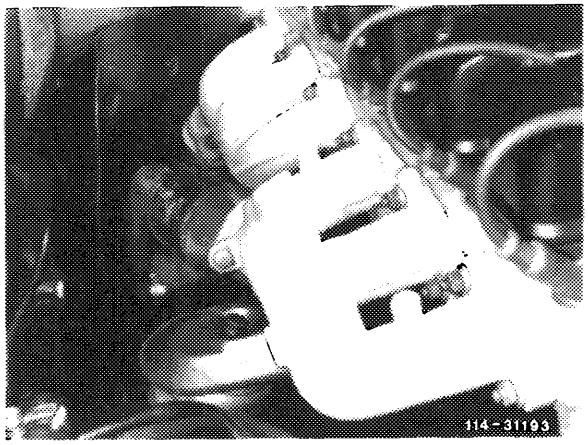

Model 124.026/030/05/090, 126.024/025, 201.029

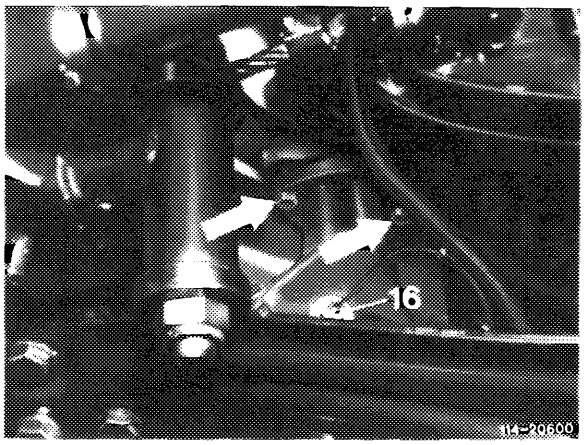

Model 126.03/04

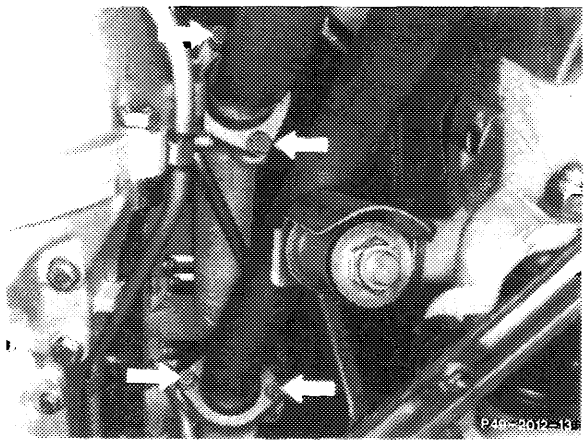

Model 129.061

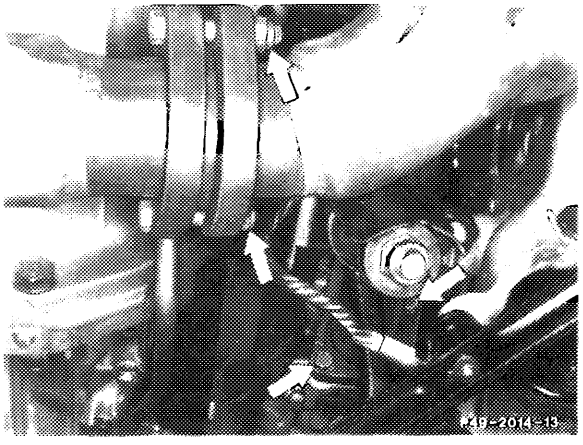

Model 129.066

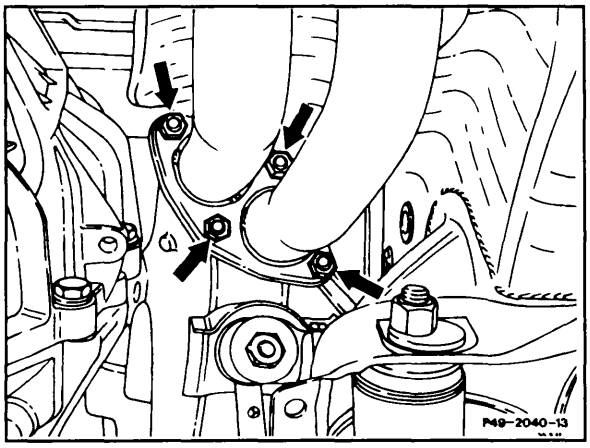

Model 201.02 up through 09.1984
(Non-catalyst model shown for location of bolts.)

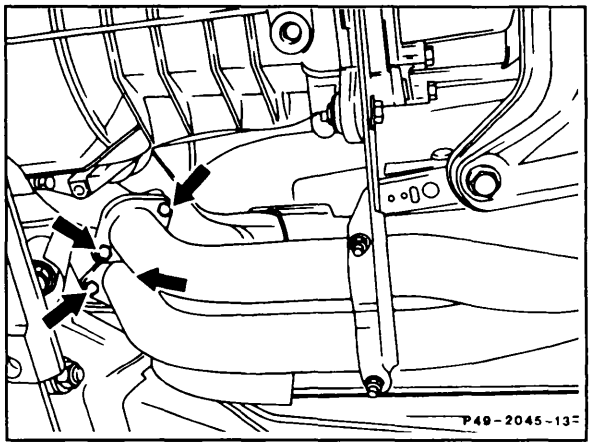

Model 201.02 as of 10.1984 and 201.03
(Non-catalyst model shown for location of bolts.)

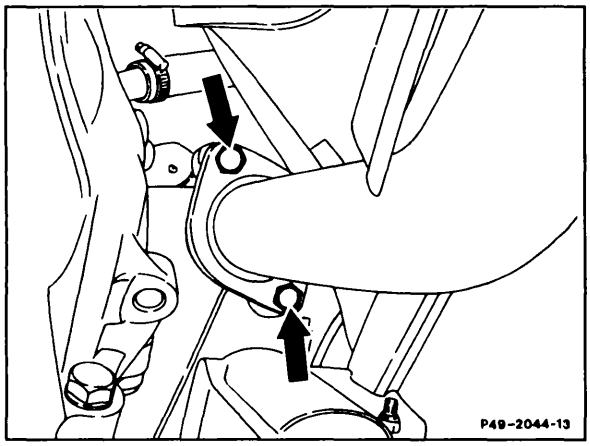

Model 201.122/126

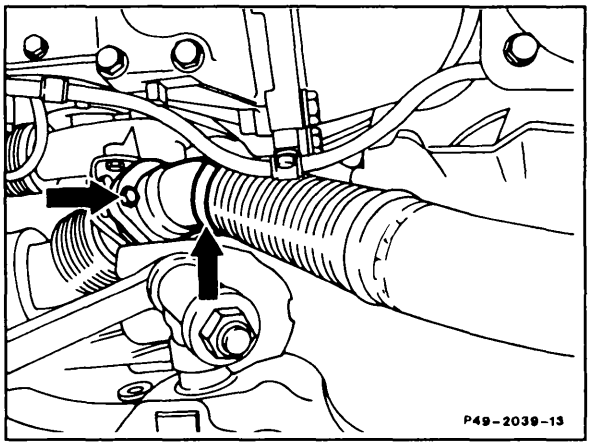

Model 124.133/193, 201.128

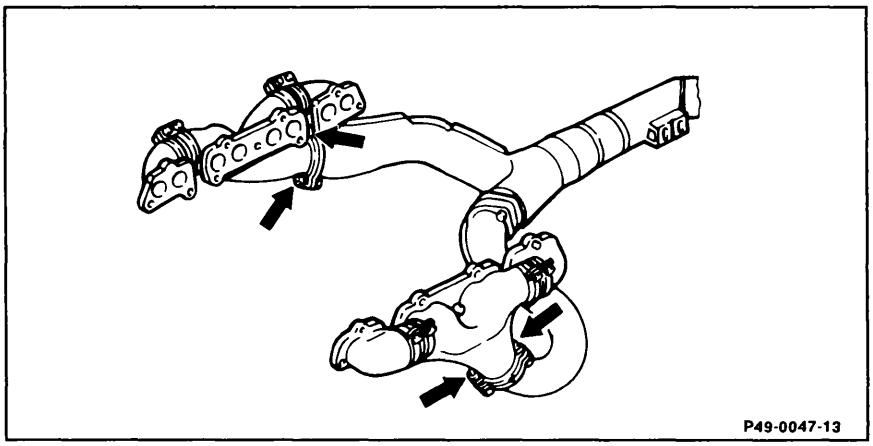

Model 124.034/036

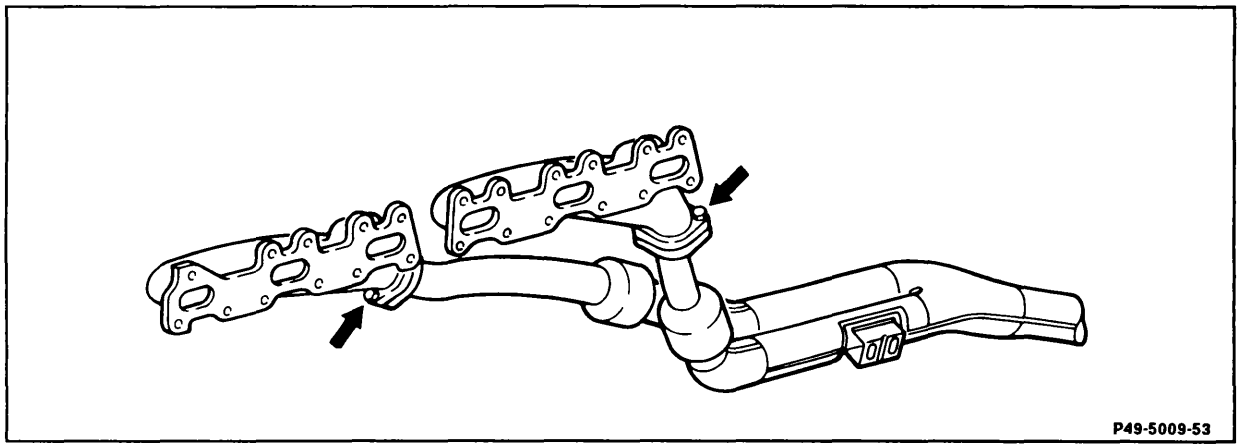

Model 140.03

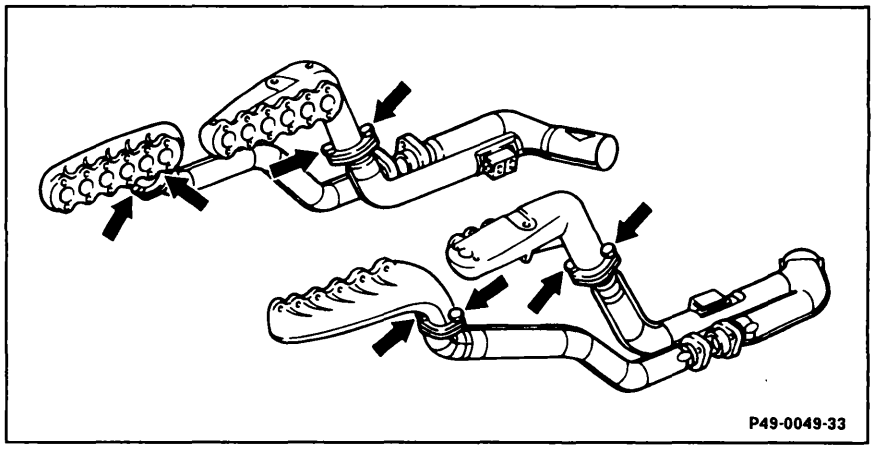

Model 140.057

Retightening exhaust system connections

4971

All models

Retighten bolts on slip joints or flanged connections. Torque to 20 Nm.

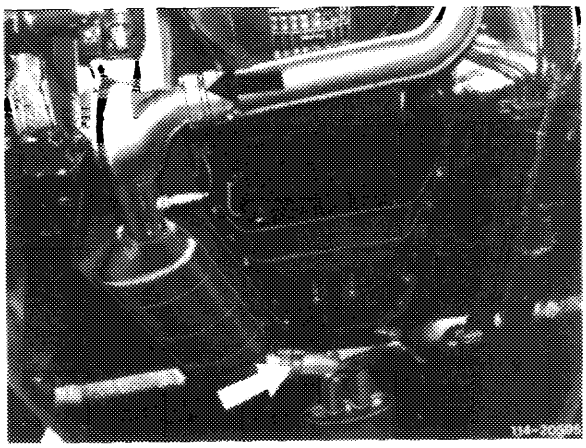

Model 107.025/045; 107.048 similar (no rear flange)

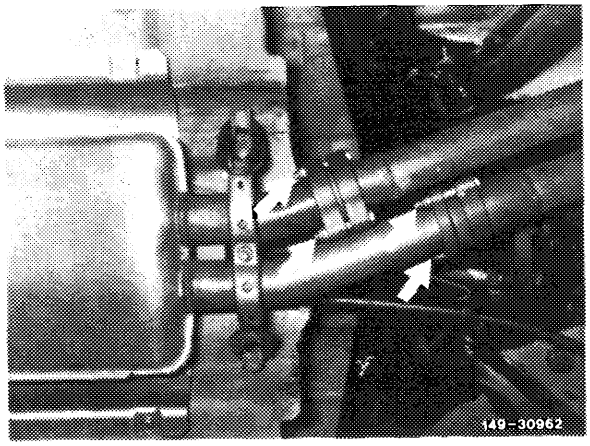

Model 107.048

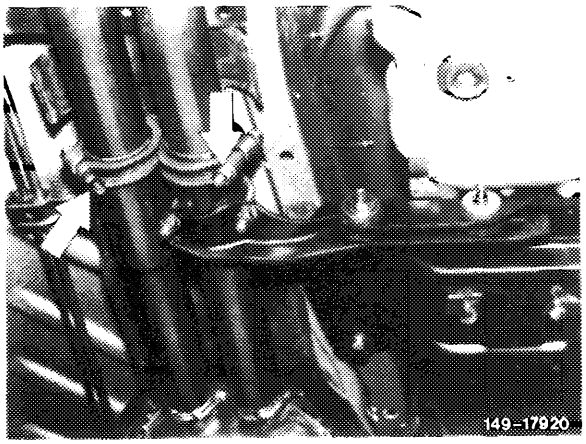

Model 123.03/05

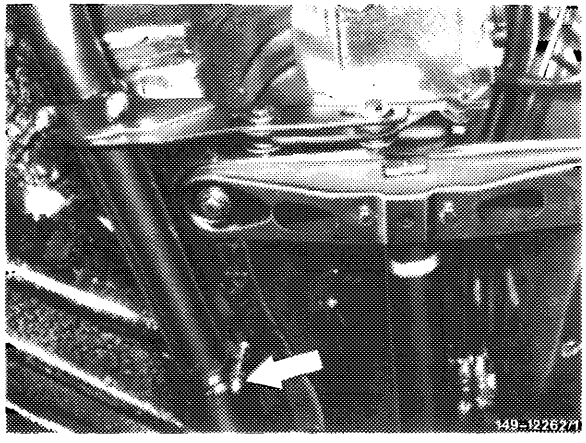

Model 123.123/130/150/190

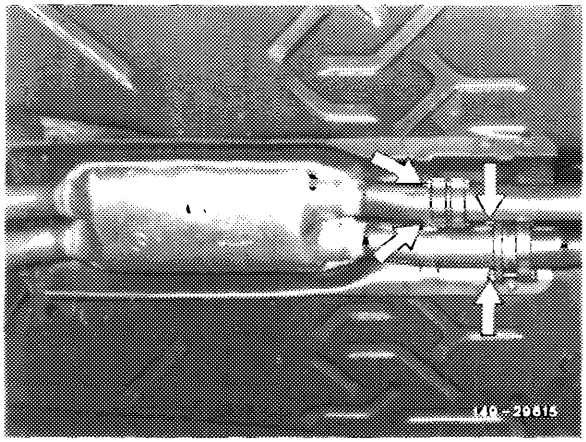

Model 124.026/030/05/09/2, 126.02, 201.029/034

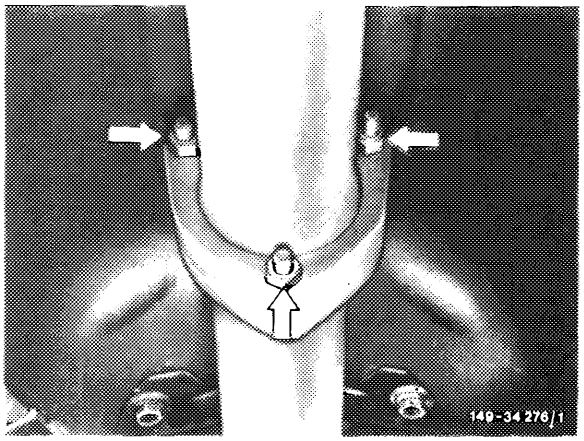

Model 124.133/193, 126.1, 201.128

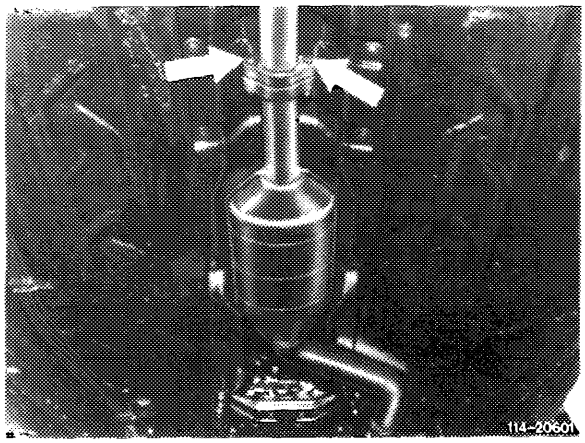

Model 126.03/04 up through 09.1985

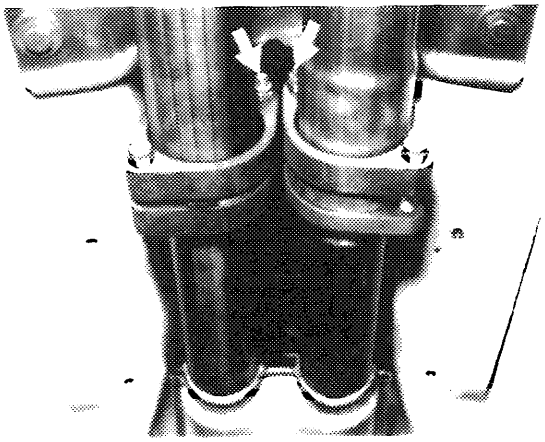

Model 126.03/04 as of 09.1985

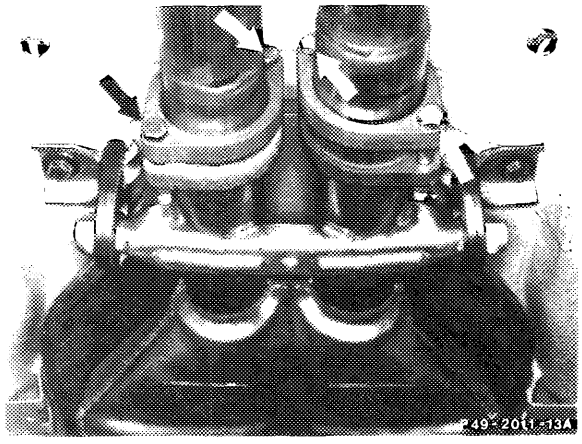

Model 129

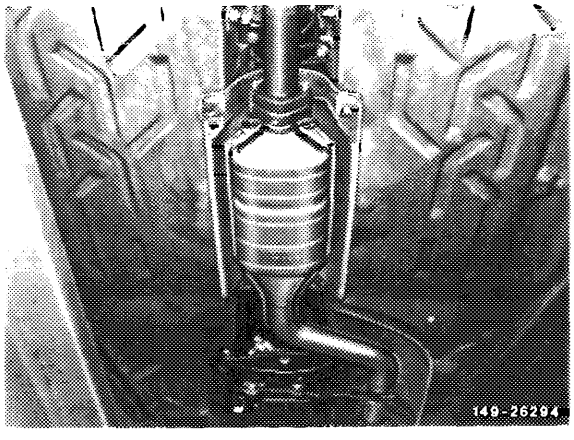

Model 201.024/028

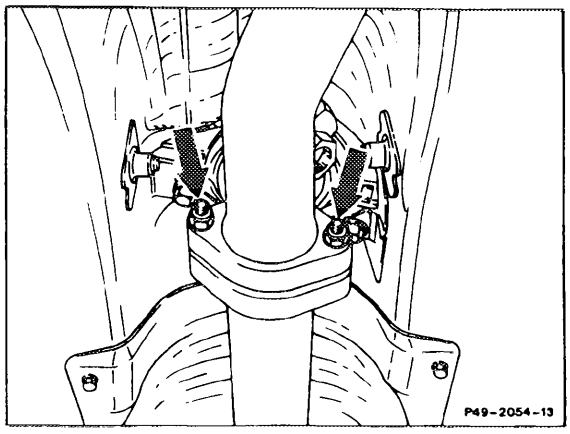

Model 201.122/126

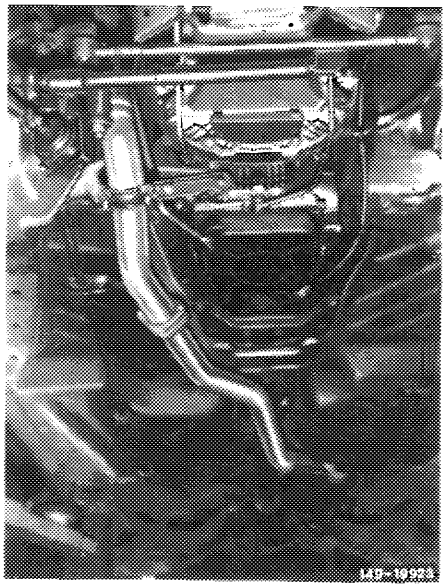

Model 123.133/153/193

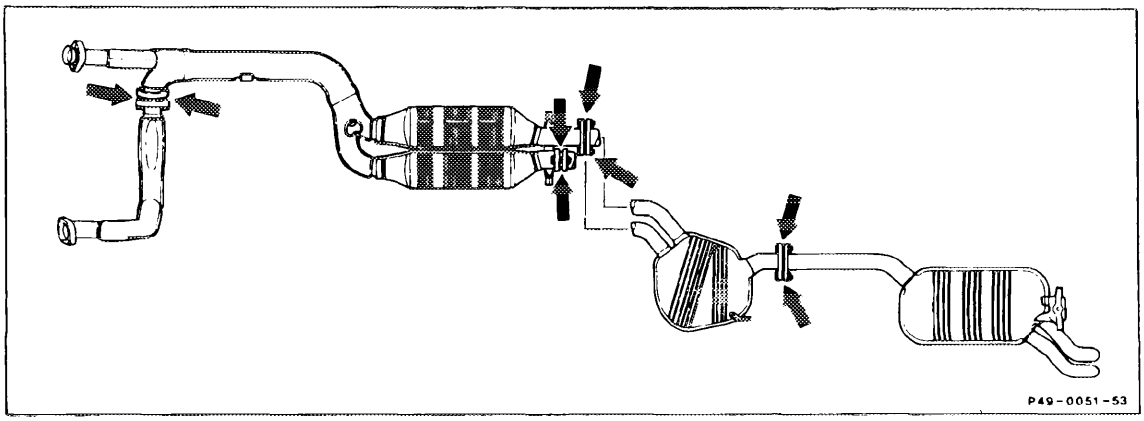

Model 124.034/036

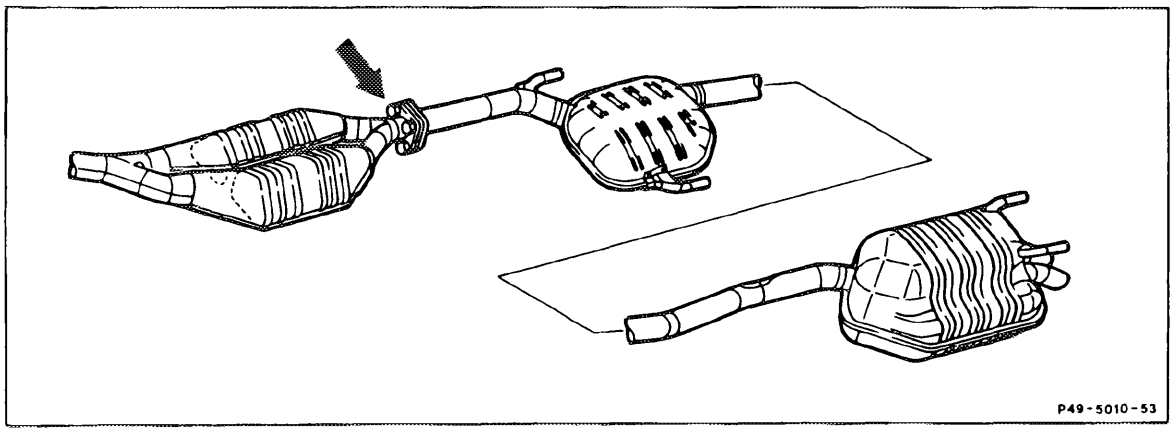

Model 140.03

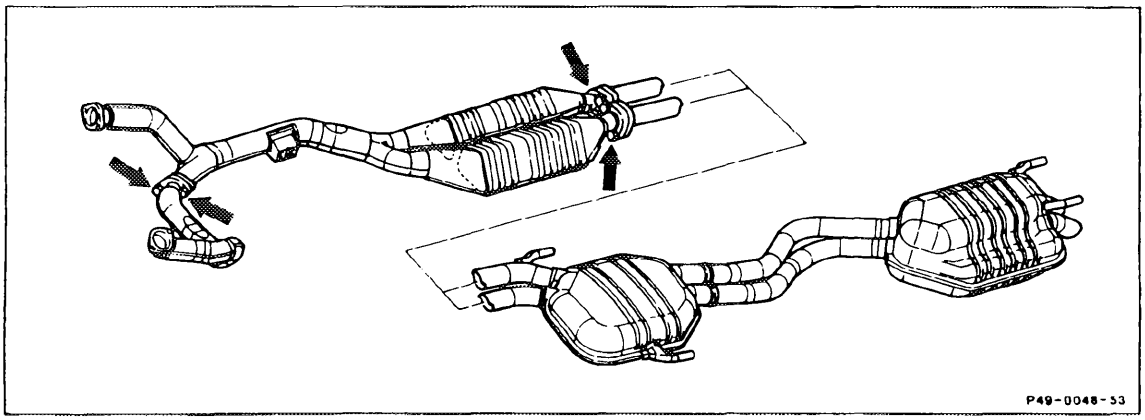

Model 140.042/051

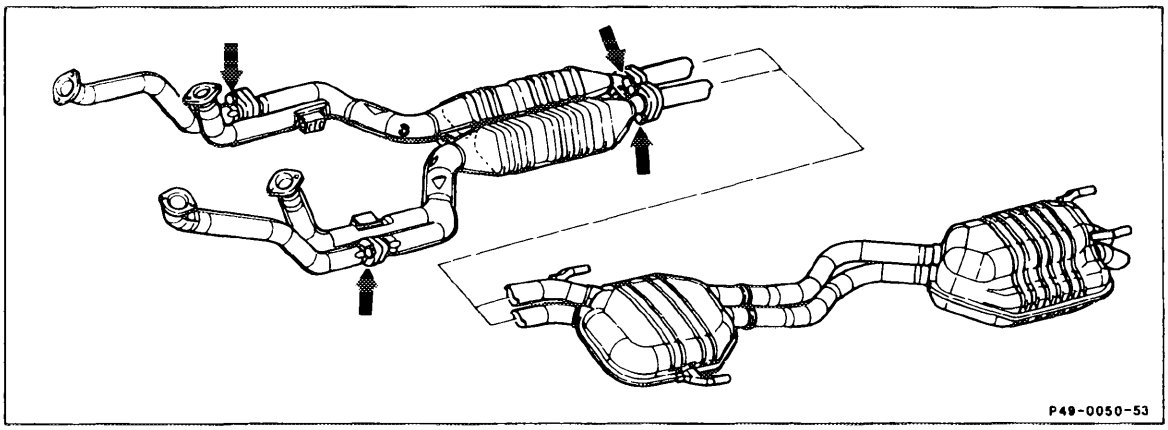

Model 140.057

The 3-way catalytic converters are designed as underfloor catalytic converters and are located in the exhaust system upstream of the center and tail silencer.

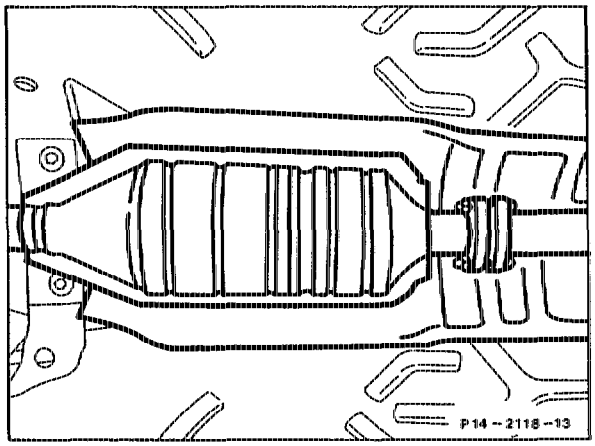

The task of the 3-way catalytic converter is to convert the three pollutants contained in the exhaust gas of gasoline engines, carbon monoxide (CO), hydrocarbons (HC) and oxides of nitrogen (NO_X), into the harmless compounds of water (H_2O), carbon dioxide (CO_2) and nitrogen (N_2).

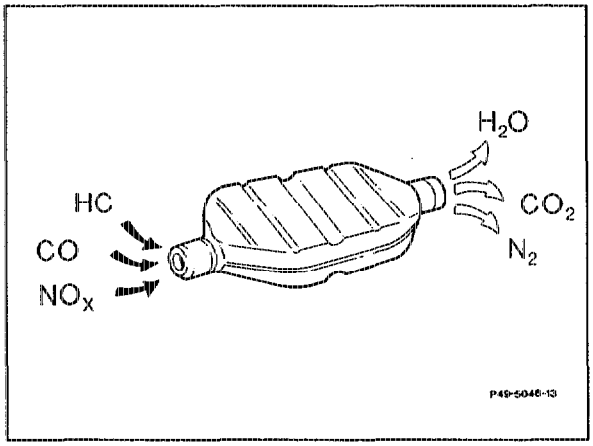

The catalyst contained within the catalytic converter is a term which comes from Greek and designates the element essential for catalytic conversion, which promotes the chemical reactions without itself being consumed. In the 3-way catalytic converter these are the noble metals platinum (Pt) and rhodium (Rh).

The catalytic converters consist essentially of three principle elements:

- Carrier body (monolith) made of high strength ceramic flexibly mounted on wire mesh

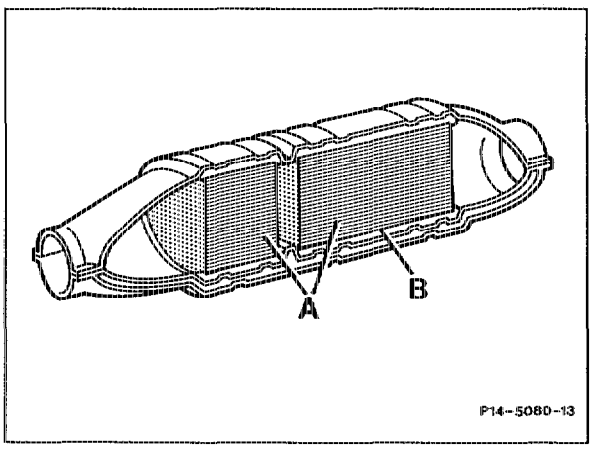

A Ceramic monolith
B Wire mesh

- An intermediate layer (washcoat) for enlarging the surface. As a result of the pore structure the surface on the monolith is increased approximately 7000 times.
- Catalytically active layer consisting of platinum (Pt) and rhodium (Rh).

Platinum accelerates the oxidation of hydrocarbons and carbon monoxide, rhodium the reduction of the oxides of nitrogen.
The portion of noble metal contained in a catalyst is some 2–3 grammes.

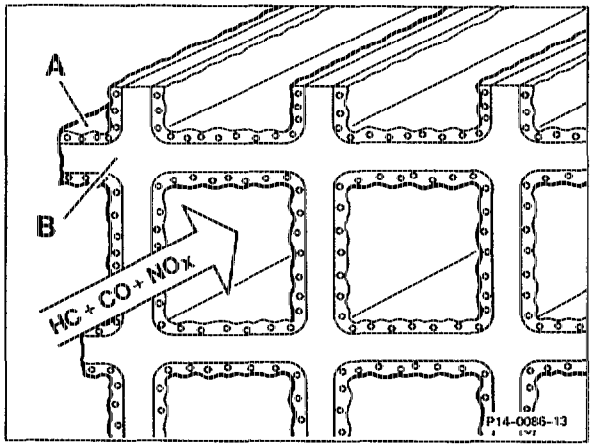

A Intermediate layer (washcoat) with platinum (Pt) and rhodium (Rh)
B Ceramic monolith

Function

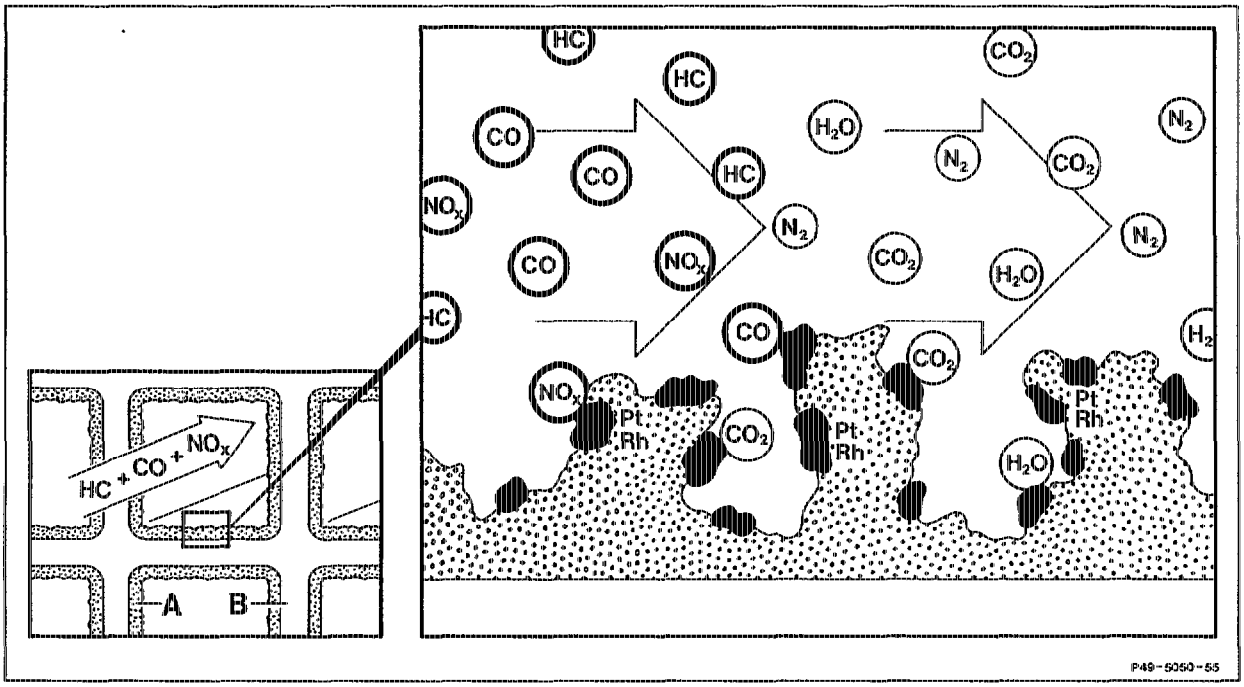

The exhaust gases flow through the catalytic converter and come into contact there with the noble metals (Pt and Rh). This results in the following chemical reactions:

- carbon monoxide (CO) and hydrocarbons (HC) are converted by oxidation to water (H_2O),
- oxides of nitrogen (NO_X) are converted by reduction to nitrogen (N_2).

Chemical reactions:

$$2\,CO + O_2 \rightarrow 2\,CO_2$$
$$2\,C_2H_6 + 7\,O_2 \rightarrow 4\,CO_2 + 6\,H_2O$$
$$2\,NO + 2\,CO \rightarrow N_2 + 2\,CO_2$$

The high conversion rate of the pollutants is determined essentially by the temperature and the residual oxygen content in the exhaust.

Oxygen is required for the oxidation of CO and HC while the reduction of the oxides of nitrogen takes place in an oxygen-deficient atmosphere. The variation between oxygen-poor and oxygen-rich exhaust is achieved by altering the fuel-air mixture within narrow limits around $\lambda = 1$.

The ratio of the fuel/air mixture is designated with lambda (λ), in which the following mean:

$\lambda < 1$ rich mixture
$\lambda > 1$ lean mixture
$\lambda = 1$ complete combustion (stochiometric air/fuel ratio, 14.7 mass parts of air to 1 mass part of fuel)

This fluctuation of the oxygen portion in the exhaust is achieved by means of the oxygen sensor and the lambda control (see Group 14). It is only as a result of this oxygen fluctuation that it is possible to chemically convert the three exhaust elements in the catalytic converter.

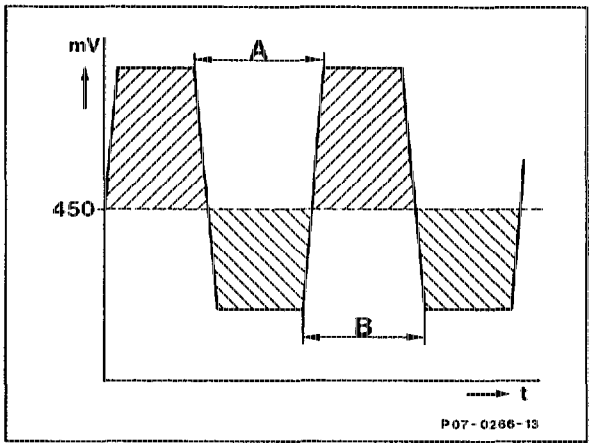

Voltage signals of oxygen sensor

A rich fuel/air mixture
B lean fuel/air mixture

The catalytic process, i. e. the chemical reaction begins in the catalytic converter from 250 °C. Excessively high temperatures cause a thermal overload.

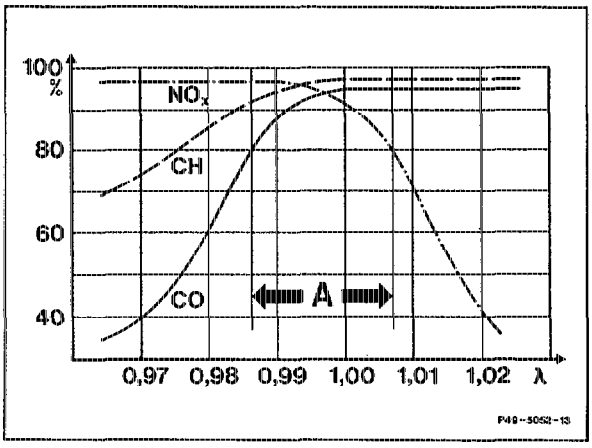

Conversion rate of pollutants in catalytic converter

A λ control range (catalyst window)

Vehicles fitted with a catalytic converter and an oxygen sensor should only be operated with unleaded fuel. Lead additives (Pb) in the fuel form a deposit on the chemically reactive surface of the catalyst and of the oxygen sensor, rendering the system ineffective.

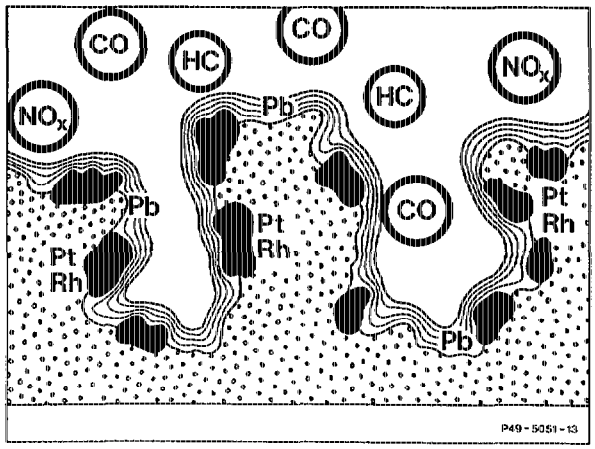

49–0025 General notes regarding vehicles with catalytic converter

Tow-starting or jump-starting
Tow-starting or jump-starting with the battery of another vehicle can be performed when the engine is cold and the catalytic converter system has cooled down. Avoid repeated attempts at starting, however. If the engine does not start **immediately**, do not make any further attempts to start the engine if it is at operating temperature in order to protect the catalytic converter system.

Checking catalytic converter system for thermal damage
If the catalyst is subjected to thermal stresses, it will be damaged. This can be checked visually with the exhaust system removed. Complaints regarding engine performance following engine faults are an indication that the catalyst has been subjected to thermal stresses. Residues of the molten catalyst block the exhaust pipe.

Fuel additives
As a matter of principle, these should not be used on vehicles fitted with a catalytic converter. It is important to ensure that only the specified quality of fuel is used.

Use of leaded fuel
If leaded fuel has inadvertently been used, check the operation of the lambda control. If the sensor is faulty, it must be replaced. If the emissions level exceeds 0.5 % CO, the complete catalytic converter system must be replaced.

Engine oils
The same oil recommendations (approved products, oil change intervals etc.) apply to vehicles **with** catalytic converter as to vehicles **without** catalytic converter.
Pay attention to the Specifications for Service Products.

Obnoxious odours
Hydrogen sulfide may be formed as a result of deposits of sulfur elements from the fuel in the catalytic converter. Hydrogen sulfide already causes obnoxious odours in minute concentrations, but is not harmful to health.

Risk of fire (parking off-road)
The catalytic converters are thermally insulated to ensure effective emissions control under all operating conditions. Provided the engine is operating properly, the temperatures which occur are no higher than in conventional silencer systems. Excessive temperatures only occur if (e. g. as a result of faults in the fuel ignition and injection system) uncombusted fuel air mixture gets into the catalytic converter.

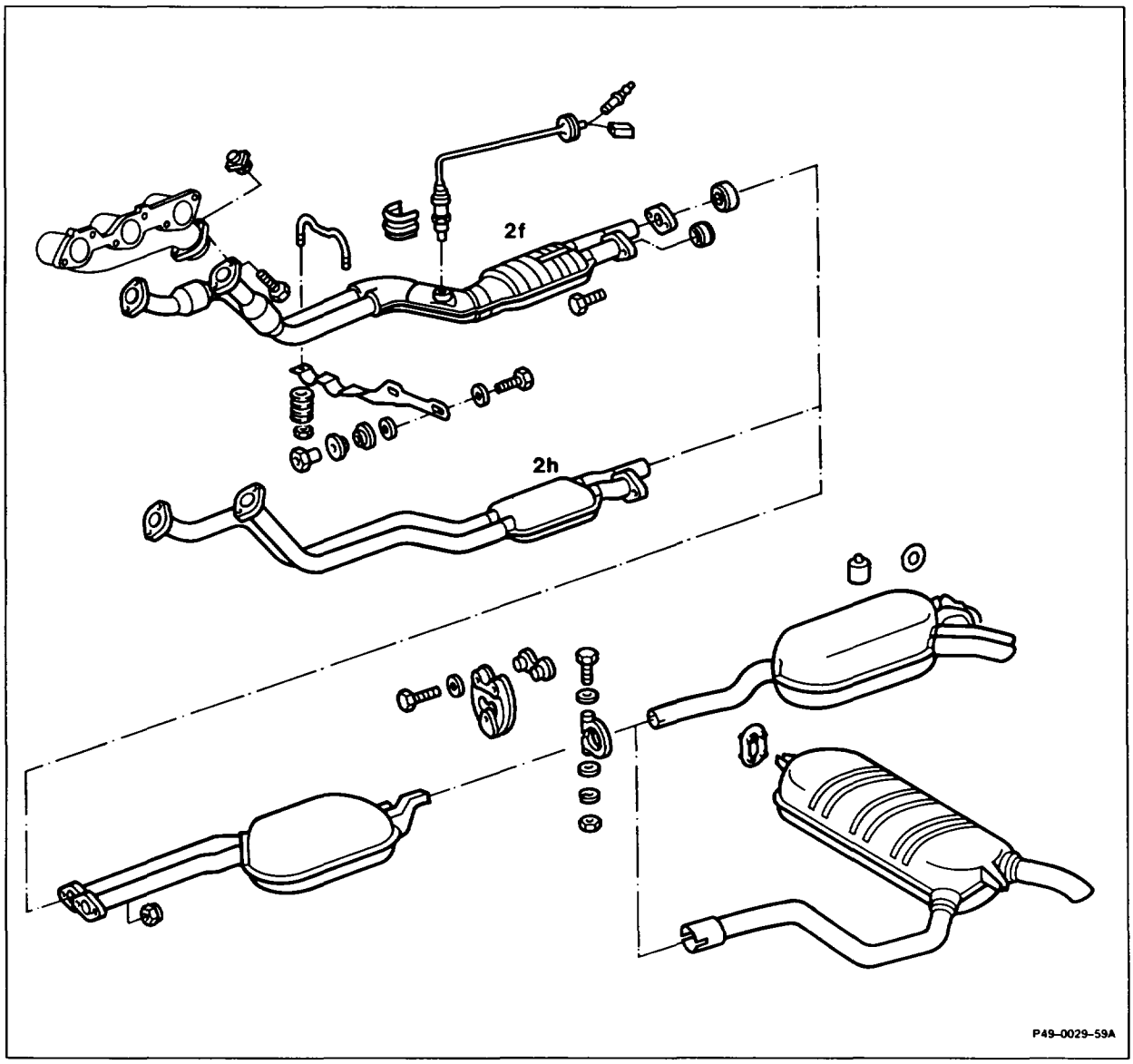

Shown on model 124

Exhaust system	remove (49–7000).
In place of rubber grommet of connection cable of oxygen sensor	insert a dummy plug.
	Note Not applicable to vehicles without closed-loop catalytic converter.
Front exhaust system (2f)	exchange with version without catalytic converter (2h).
Exhaust system	install (49–7000).
Resistance trimming plug for EZL ignition control unit and KE control unit	exchange (MF system).
	Note New resistance trimming plug for KE control unit must be sealed.
Engine data plate	replace.
Engine as per data plate	set: ignition timing point, CO level, idle speed (07.3–2053). Affix ASU disc to front license plate and issue test certificate.
Guide funnel in filler neck	remove (47–4100, section A).
Fuel information plate for unleaded fuel	remove.
	Note On vehicles with multi-functional mixture preparation and ignition system (MF), affix fuel information plate 124 583 36 21 A.

Commercially available tools and testers (see Workshop Equipment Manual)

Designation	e.g. Make, order no.
Engine tester with oscilloscope	Bosch, MOT 002.02
CO analyzer	

Parts

Designation	Engine	Part no.
Sealing wire	–	001 367 00 00 15
Seal	–	000 988 09 70
Engine data plate	103.940/941/982 without KAT 103.983/981/982 without KAT	124 584 57 21 124 584 60 21

Vehicles fitted with a catalytic converter must not be operated with leaded fuel.
For this reason, the catalytic converter and other components must be removed and the engine setting also altered for traveling in countries in which unleaded fuel is either not available or not throughout the country.

Basically, such customers who wish a conversion should be advised to consider a cost/benefit analysis.

Apart from the purely technical conversion work, a point to consider is that a vehicle registered in the Federal Republic of Germany must be presented to the Technical Inspection Centre for Motor Vehicles following the conversion and this may affect the reduction or the temporary exemption from vehicle license duty.

If the converted vehicle has to be presented to a Technical Inspection Centre for Motor Vehicles, a confirmation relating to the applicable technical data of the vehicle following conversion is essential.

This confirmation, relating to the individual vehicle, must be requested in good time from our department EP/BZT. Such an application should be submitted together with a copy of the vehicle registration documents.

Note
In the event that a customer wishes to have his vehicle equipped again with a catalytic converter at a later date, the removed parts should be made available to him.
We should like to point out that the re-installation must be approved by a Technical Inspection Centre for Motor Vehicles.
In this connection also, an individual confirmation should be requested in good time from our departmenet EP/BZT, enclosing a copy of the vehicle registration documents.

49–4940 Replacing center, tail silencer

Preceding work:
Removing exhaust system as of plug connection (49–0210).

Operation no. of operation texts and work units or standard texts and flat rates:
49–4940.

A. Plug-connected exhaust system

See Removing, installing, replacing and bolting exhaust system as of plug connection (49–7280).

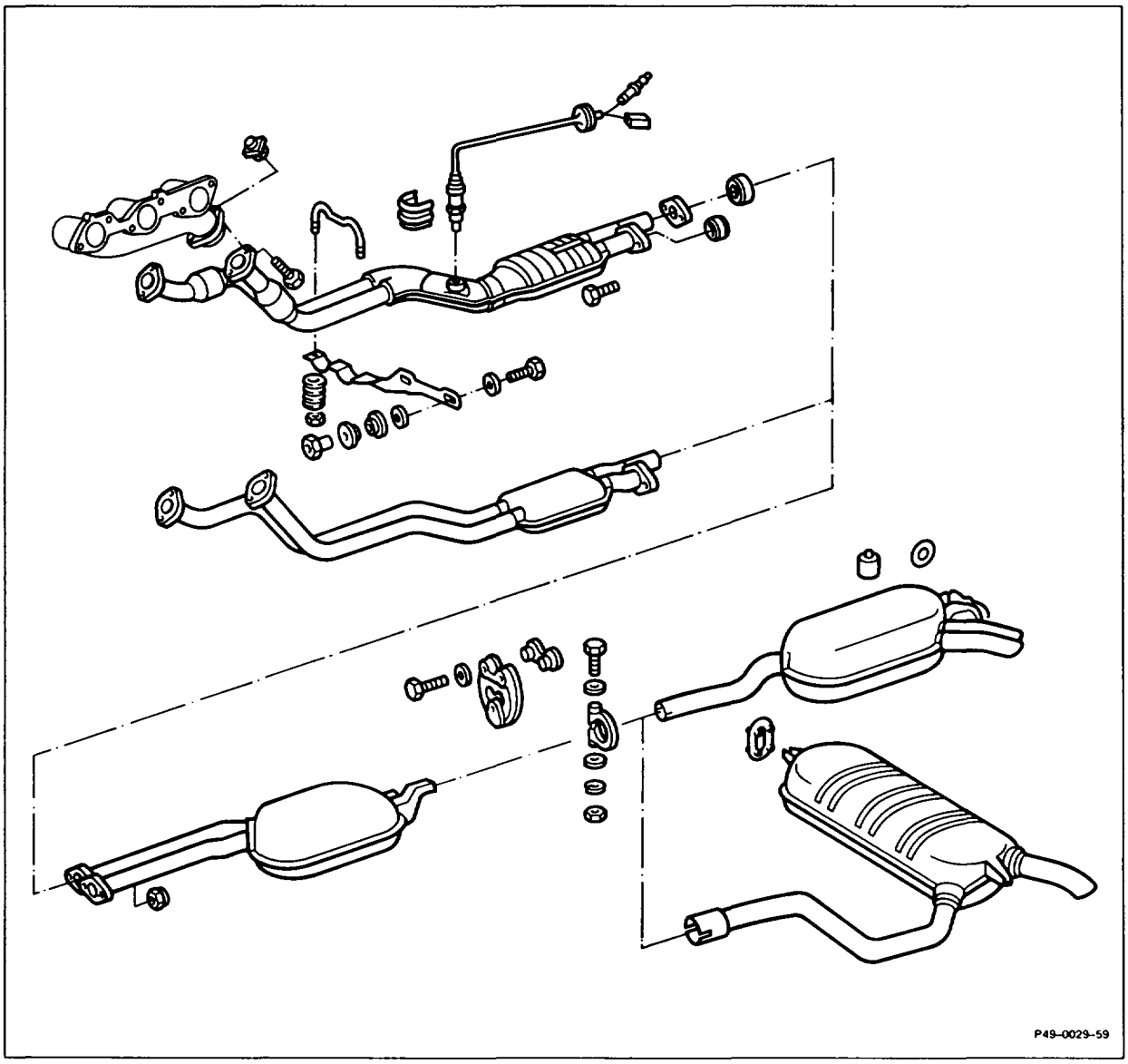

Shown on model 124

B. Welded exhaust system

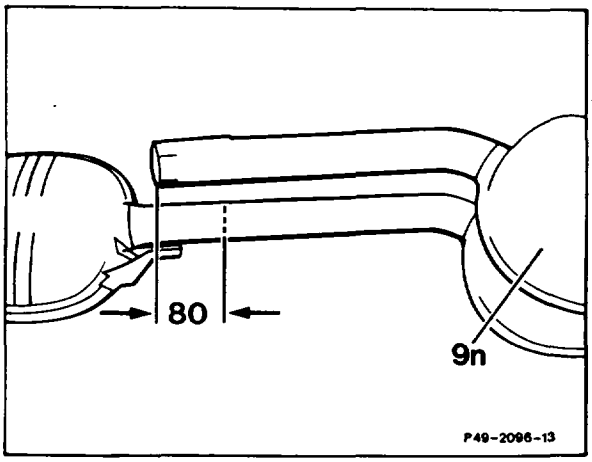

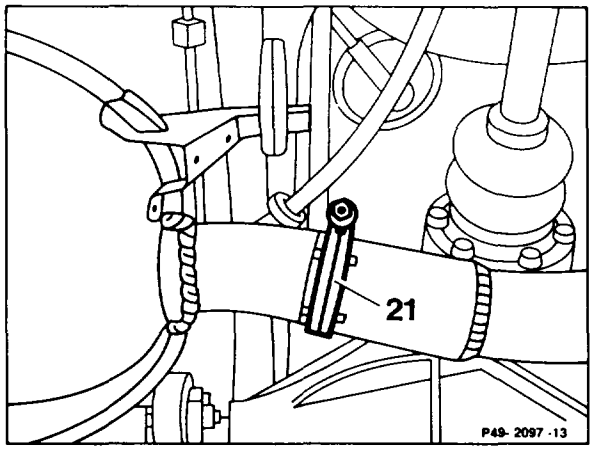

New tail silencer (9n) ..... position with plug connection exactly over the removed exhaust system and mark pipe length of new tail silencer on the removed exhaust system.

80 mm from the marking ..... (tolerance –10 mm) toward tail silencer, cut through pipe (broken line) to ensure an insertion depth of 70–80 mm.

For installation ..... use pipe clip (21).

Installation ..... is performed by analogy to removing, installing, replacing and bolting exhaust system as of plug connection (49–7280).

Note
When replacing the centre silencer, proceed by analogy to the tail silencer.

Model 107
For replacing the centre silencer, exchange complete front exhaust system (removing and installing exhaust system 49–7000).

49–5531 Removing and installing closed-loop catalytic converter

Operation no. of operation texts and work units or standard texts and flat rates:
49–5531.

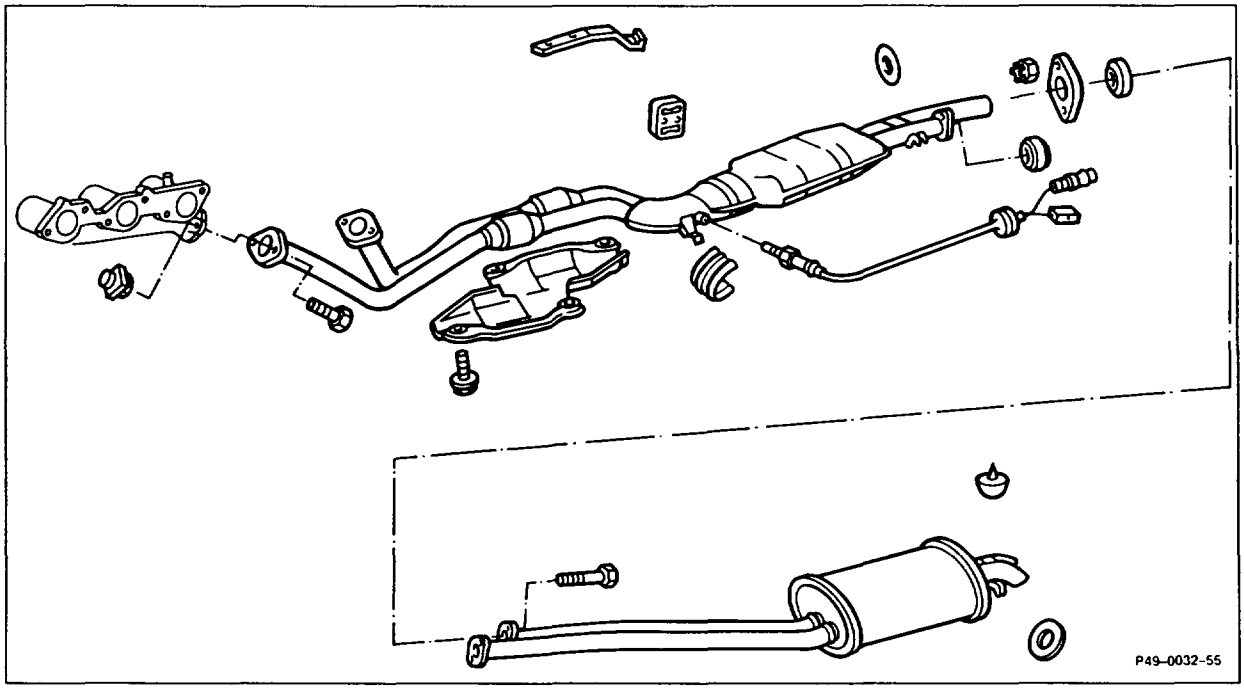

Shown on model 107.041

Exhaust system	remove, install (49–7000).
Parts	check, replace if necessary.

Note

Retrofit catalytic converter and oxygen sensor to RÜF versions.
The scope of work for installing a closed-loop catalytic converter in RÜF version vehicles (Code 821) is included as installation instructions in the "Optional equipment" folder – Volumes 1 and 2, Group 14.

Operation no. of operation texts and work units or standard texts and flat rates:

A. General

An open-loop catalytic converter can be retrofitted to vehicles with the chassis or vehicle ident end nos. stated below.

Model	Sales designations	Engine	Chassis or vehicle ident end no. as of
124.030	300 E	103.980	000 001

B. Installing open-loop catalytic converter

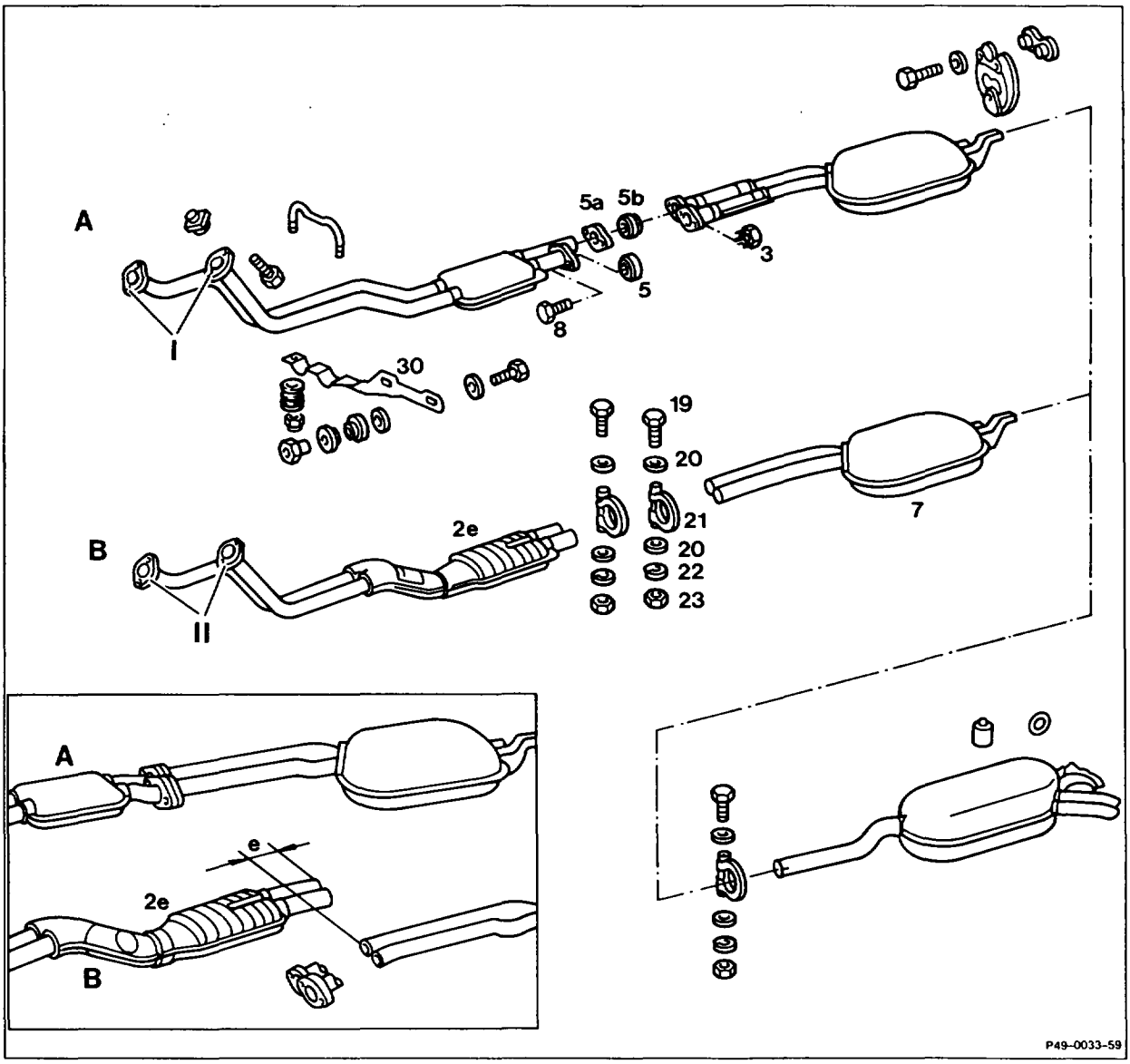

A Exhaust system without catalytic converter
B Retrofitted exhaust system with open-loop catalytic converter
e Pipe insertion depth

Note

Before installing the catalytic converter, check that the number affixed to the catalytic converter agrees with the part no. stated in the list.

Exhaust system	remove (49–7000).
Front exhaust pipe with open-loop catalytic converter (2e)	place next to exhaust system.
	⚠ The manifold flanges (I, II) must be at the same height.
Exhaust pipes of centre silencer (7)	cut to length.
	⚠ Pay attention to pipe insertion depth (e) of catalytic converter (e = 80 mm).
Exhaust system with open-loop catalytic converter	install (49–7000).
	Note Sintered seal (5), flange (5a), graphite seal (5b) no longer fitted. In place of the bolted joints, use nuts (3), bolts (8), pipe clips (21), bolts (19), washers (20), spring lock washers (22), nuts (23) from the installation kit. Insert new carrier (30) from the installation kit. Tightening torque of nuts (23) 25 Nm (reference value).
Fuel pump relay	install 002 545 26 05. This is necessary because the engine speed on KAT vehicles must be limited by fuel shutoff.
Engine	adjust. Set ignition timing point, idling speed and CO value upstream of catalytic converter (07.3–2053). To set CO, use measuring point (screw plug) upstream of catalytic converter.
	Note For values see table "test and adjustment data." The same conditions apply to conditioning as for vehicles without catalytic converter.

Engine data plate	(open-loop KAT) stick on radiator beam on left or right and enter current engine setting data with ballpoint pen.
Guide funnel in filler neck	install (47–4100, section A).
Information plate for unleaded fuel	stick into fuel filler recess.

Special tools

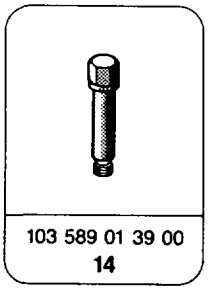

103 589 01 39 00
14

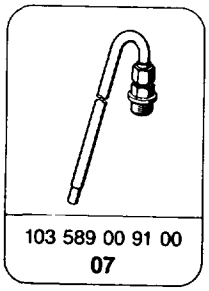

103 589 00 91 00
07

Parts

Model	Designation	Part no.
124.030	KAT installation kit	124 490 12 15
124.030	Fuel pump relay	002 545 26 05

Available from: Plant 50 (PEW Sindelfingen)

Listing (model, catalytic converter model designation/part no. and homologation approval number)

Model	Part no.	**Homologation approval no.**
124.030	124 490 11 14 124 490 14 14 (optionally)	[1])

[1]) The homologation no. (general operating permit) should be obtained by referring to the respective vehicle registration documents and entered in the manufacturer's confirmation.

Note

After installing the catalytic converter, the vehicle must only be operated with unleaded fuel.

Even before installing the catalytic converter, we recommend driving the vehicle with at least two tank fillings of unleaded fuel so that the contents of the tank do not have to be replaced.

Pay attention to notes for use of unleaded fuels (15–0509).

If the catalytic converter is to optimally reduce all pollutants, the ignition timing point, idle speed and idle emissions level must be set as stated in the table. A slight additional fuel consumption is permissible as a result of the altered engine setting.

For vehicles which are registered in the Federal Republic of German, an ASU certificate should be issued and a new test disc affixed to the front license plate.

For obtaining a reduction in vehicle license duty in the Federal Republic of Germany, the workshops in which installation is performed must issue a manufacturer's certificate to the respective Motor Vehicle Authority/Motor Vehicle Registration Authority. The manufacturer's confirmation should be submitted to the Motor Vehicle Authorities together with the vehicle registration documents.

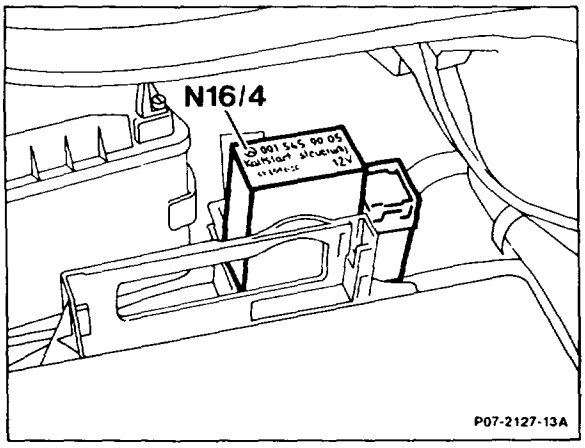

N16/4 Fuel pump relay

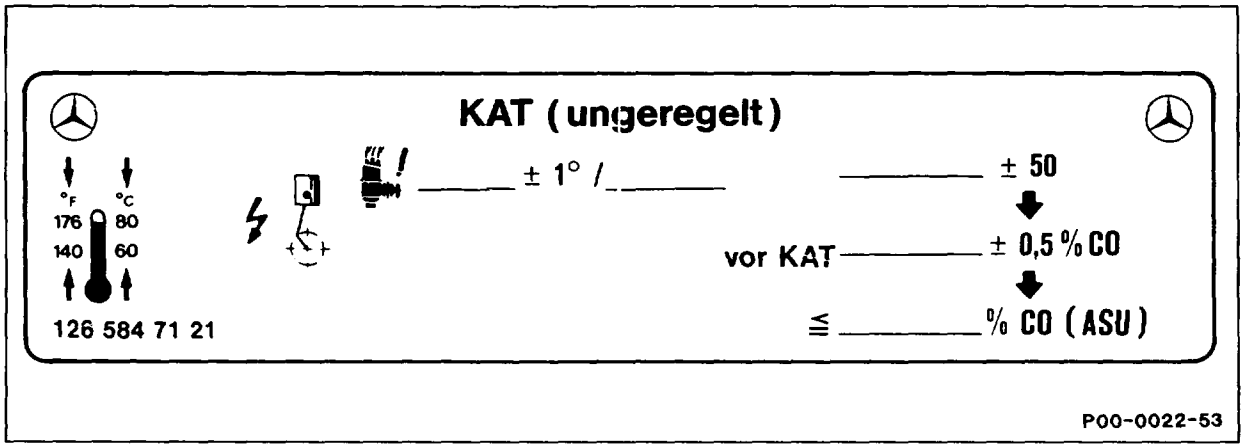

Engine data plate (open-loop KAT)

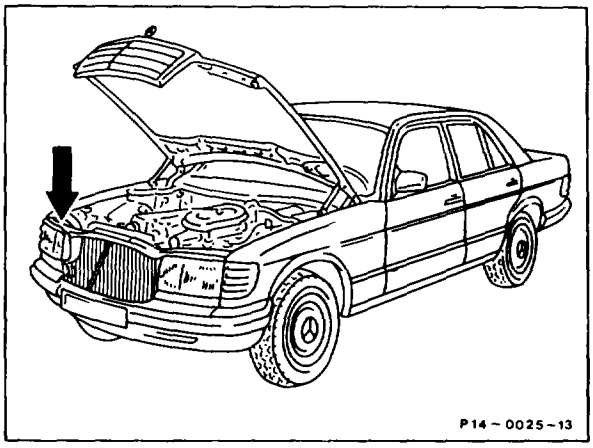

Location of engine data plate

49–7000 Removing and installing exhaust system

Preceding work:
Removing and installing engine compartment panel
Removing and installing, replacing and bolting exhaust system as of plug connection (49–7280).

Operation no. of operation texts and work units or standard texts and flat rates:
49–7000.

A. Model 107

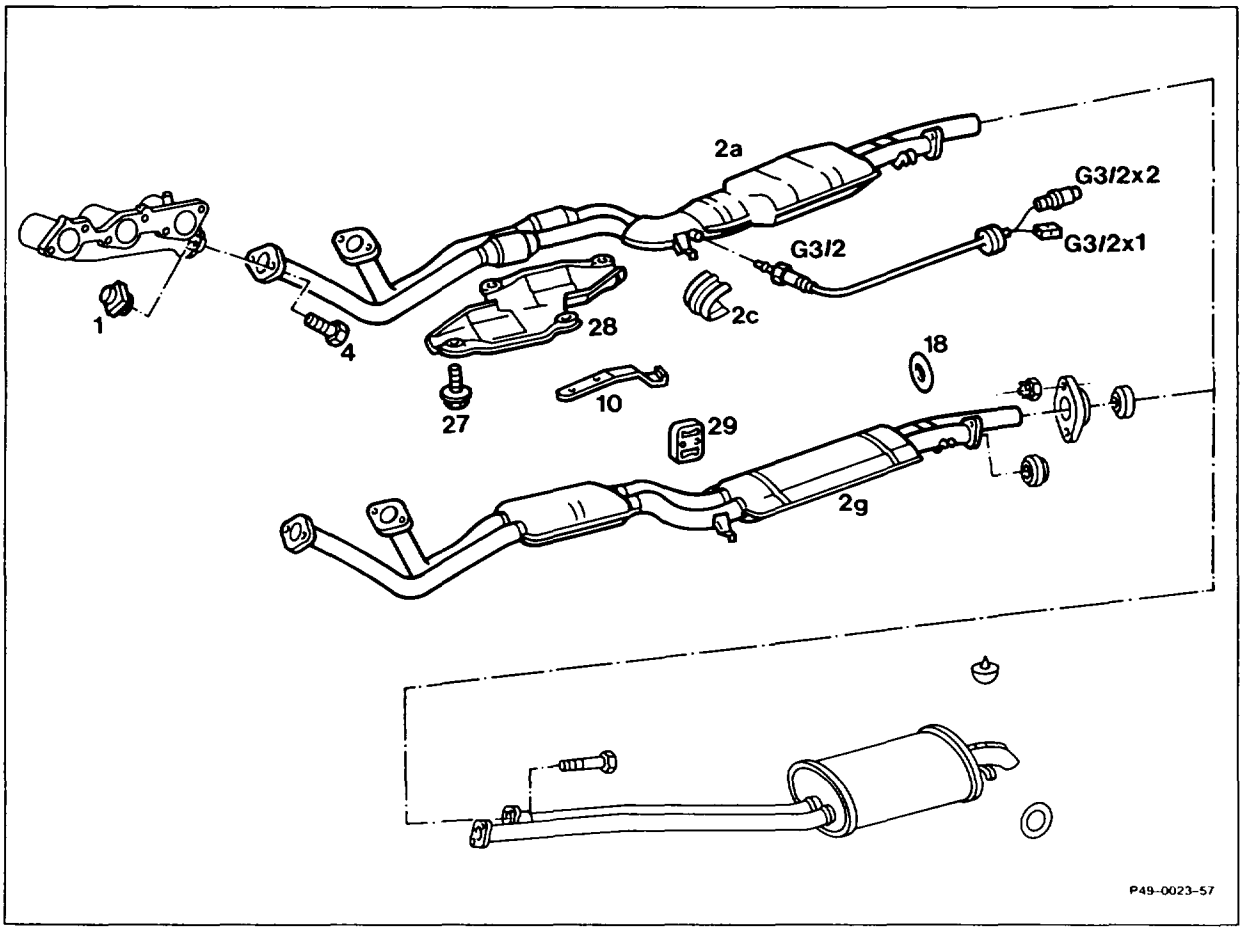

Plug connection, oxygen sensor heating coil (G3/2x1) and plug connection, oxygen sensor signal (G3/2x2) ..... in right footwell, below cover plate, separate, plug together.

Heat shield (2c) ..... pull off, fit on. Pay attention to installation position.

Oxygen sensor (G3/2) ..... unscrew, install.

Installation note
Coat thread with paste 000 989 88 51.
Ensure the cable is correctly routed.

Bolts (27)	unscrew, screw in. Take off flame shield (28), fit on (only J).
Bolts (4)	unscrew, screw in. Replace bolts (4). Tightening torque 25 Nm (reference value).
Rubber rings (18, 29)	detach, attach. Check whether damaged and worn.
Front exhaust pipe with front and underflow catalytic converter (2a) or front exhaust pipe with front and centre silencer (2g)	take off, fit on.
Riveted nuts (1)	at exhaust manifold, remove, install. Knock out riveted nuts with a suitable tool, (e.g. bolt).
	Installation note Install riveted nuts with cocking bolt 103 589 01 39 00. Tightening torque of cocking bolt 30 Nm (reference value).
Carrier (10)	check suitability for reuse, replace if necessary.
Exhaust system	with engine running, check for leaks.

Special tools

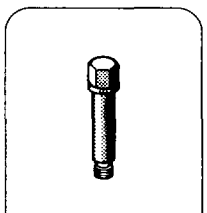

103 589 01 39 00
14

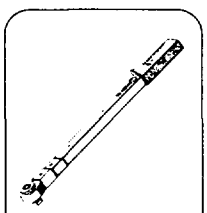

001 589 66 21 00
00

Location of oxygen sensor plug connection

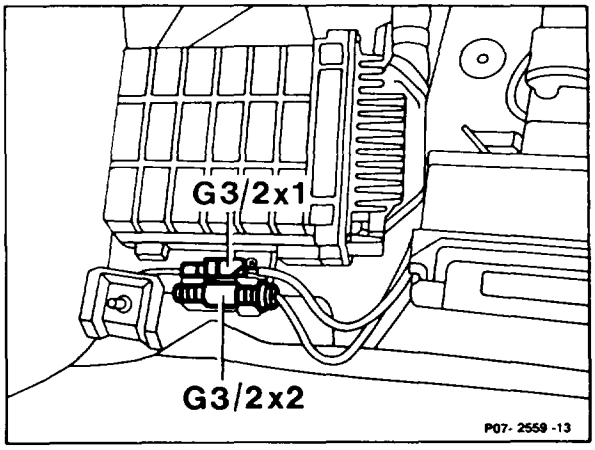

G3/2x1 Plug connection, oxygen sensor heating coil
G3/2x2 Plug connection, oxygen sensor signal

B. Models 124, 126, 201

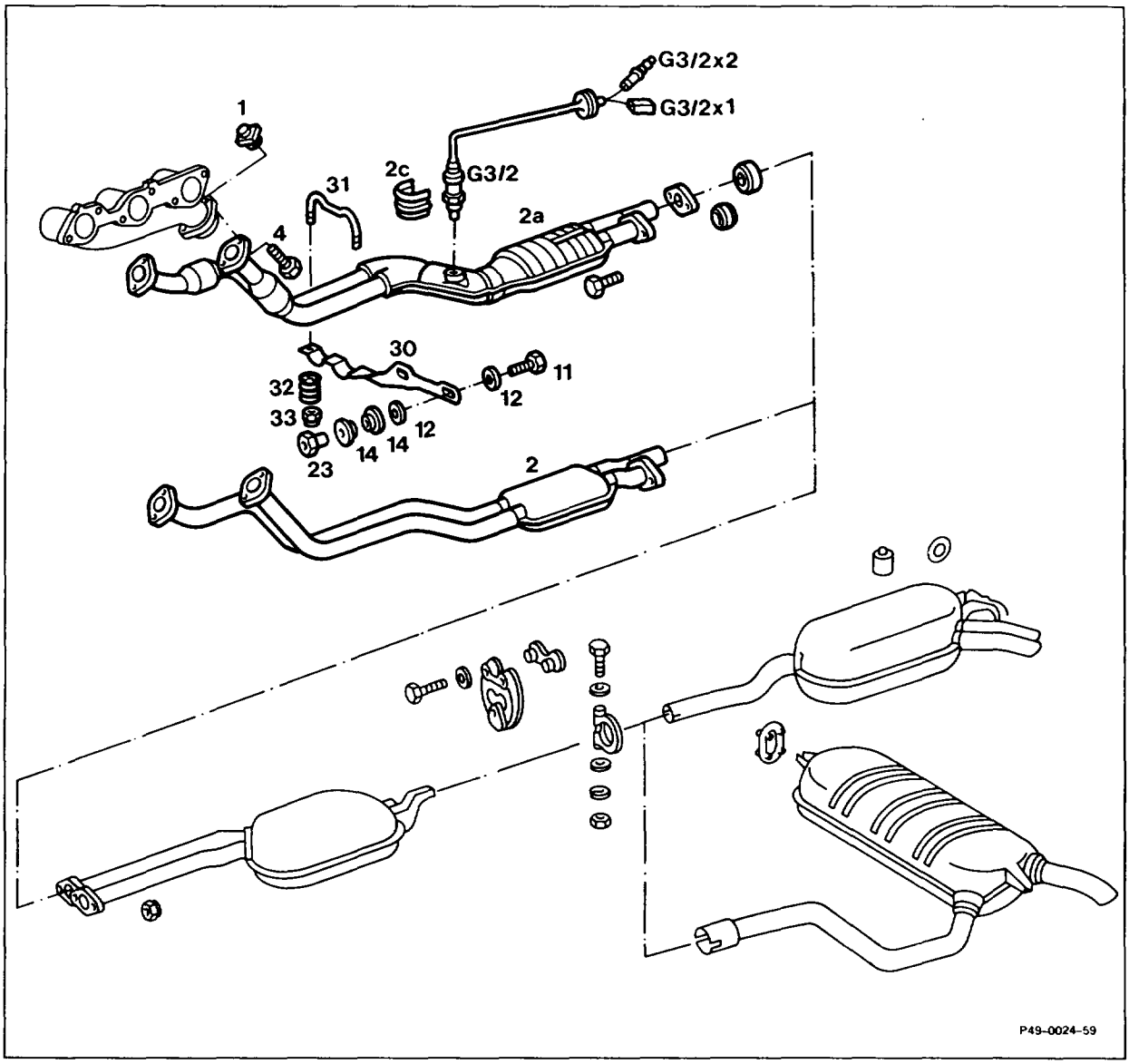

Shown on model 124

Plug connection, oxygen sensor heating coil (G3/2x1) and plug connection, oxygen sensor signal (G3/2x2)	in footwell, separate, plug together.
Heat shield (2c)	pull off, fit on. Pay attention to installation position.

Oxygen sensor (G3/2)	unscrew, install.
	Installation note Coat thread with paste 000 989 88 51. Ensure cable is correctly routed.
Retaining bar (31) with dished springs (32) and self-locking nuts (33)	take off, fit on.Tightening torque 7 Nm (reference value).
	Installation note Check parts and replace if necessary.
	⚠ Pay attention to illustration note for installing dished springs.
Bolts (4)	unscrew, screw in. Replace bolts (4). Tightening torque 25 Nm (reference value).
Carrier (30) with bolts (11), washers (12), rubber washers (14) and nuts (23)	take off, fit on. Tightening torque 20 Nm (reference value).
	Installation note Check parts and replace if necessary.
Front exhaust pipe with front and underflow catalytic converter (2a) or front exhaust pipe with silencer (2)	take off, fit on.
Riveted nuts (1)	at exhaust manifold, remove, install. Knock out riveted nuts with suitable tool (e.g. bolt).
	Installation note Install riveted nuts with cocking bolt 103 589 01 39 00. Tightening torque of cocking bolt 30 Nm (reference value).
Exhaust system	with engine running, check for leaks.

Special tools

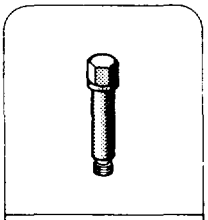

103 589 01 39 00
14

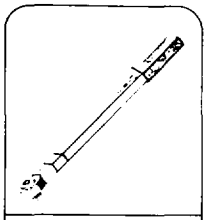

001 589 66 21 00
00

⚠
Install the dished springs at the retaining bar so that the curved face is always opposite the other (as illustrated).

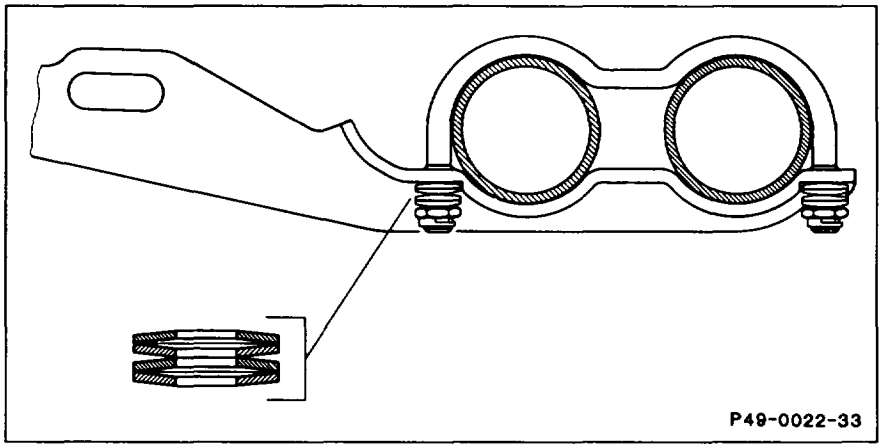

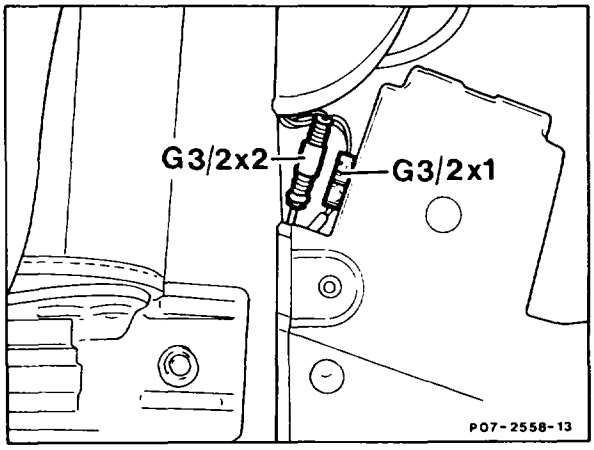

Model 124
G3/2x1 Plug connection, oxygen sensor heating coil
G3/2x2 Plug connection, oxygen sensor signal

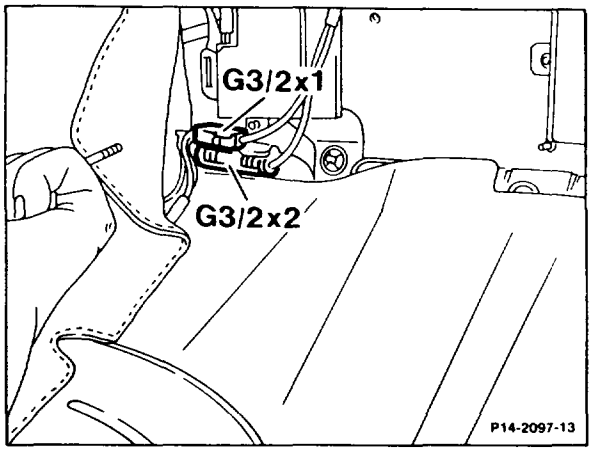

Model 126
G3/2x1 Plug connection, oxygen sensor heating coil
G3/2x2 Plug connection, oxygen sensor signal

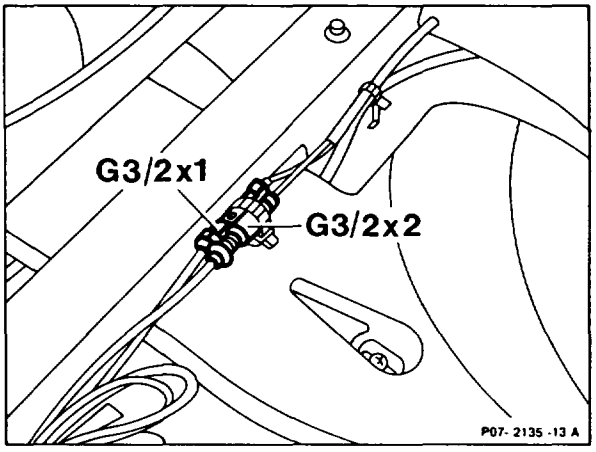

Model 201
1st version
G3/2x1 Plug connection, oxygen sensor heating coil
G3/2x2 Plug connection, oxygen sensor signal

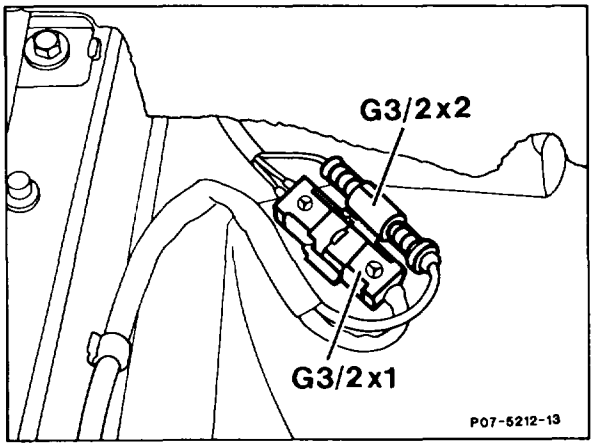

Model 201
2nd version
G3/2x1 Plug connection, oxygen sensor heating coil
G3/2x2 Plug connection, oxygen sensor signal

C. Model 129

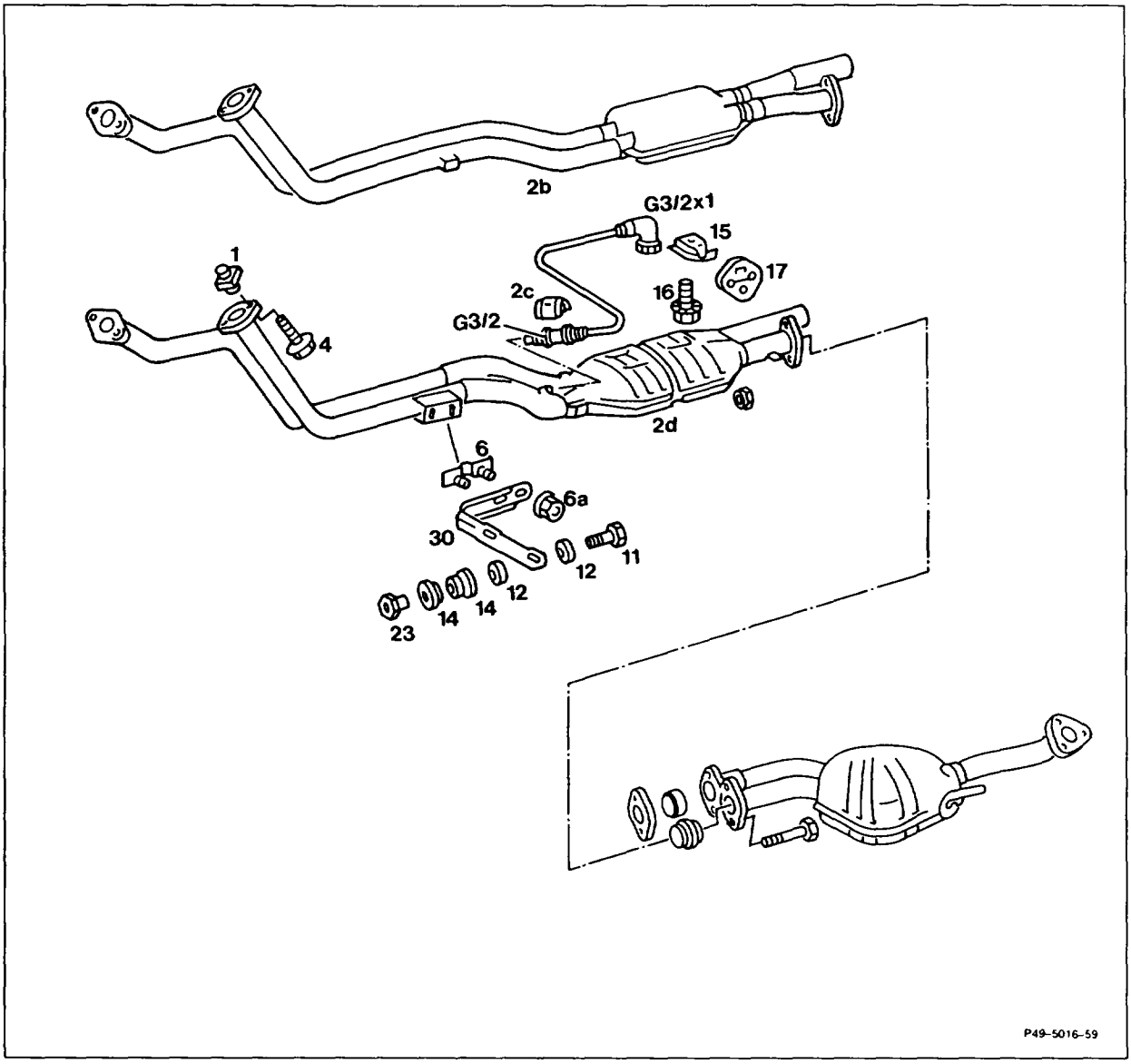

Plug connection, heated oxygen sensor (G3/2x1)	separate at outside right of transmission tunnel, plug together.

Note
Slackening union nut = counter-clockwise
Tightening union nut = clockwise

Heat baffle (2c)	pull off, fit on. Pay attention to installation position.
Oxygen sensor (G3/2)	unscrew, install.
	Installation note Coat thread with paste 000 989 88 51. Ensure the cable is correctly routed.
Self-locking nuts (6a)	unscrew, screw on, replace. Tightening torque 20 Nm (reference value).
Carrier (30) with bolts (11), washers (12), rubber washers (14) and nuts (23)	take off, fit on. Tightening torque 20 Nm (reference value).
	Installation note Check parts and replace if necessary.
Threaded plate (6)	check suitability for reuse, replace if necessary.
Bolts (4)	unscrew, screw in. Replace bolts (4). Tightening torque 23 Nm (reference value).
Rubber ring (17)	detach, attach. Check for damage and wear.
Front exhaust pipe with underflow catalytic converter (2d), or front exhaust pipe with front silencer (2b)	take off, fit on.
Bolt (16)	replace. Tightening torque 25 Nm (reference value).
Holder (15)	check suitability for reuse.
Riveted nuts (1)	at exhaust manifold, remove, install. Knock out riveted nuts with suitable tool (e.g. bolt).
	Installation note Install riveted nuts with cocking bolt 103 589 01 39 00. Tightening torque of cocking bolt 30 Nm (reference value).
Exhaust system	with engine running, check for leaks.

Special tools

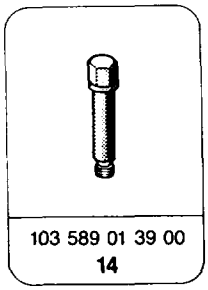

103 589 01 39 00
14

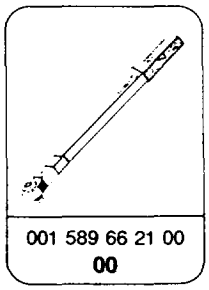

001 589 66 21 00
00

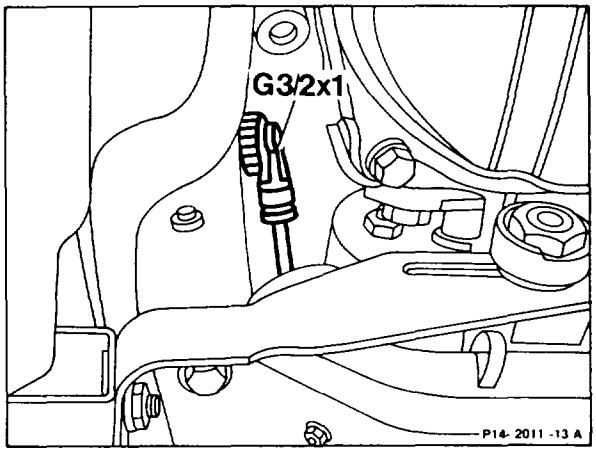

G3/2x1 Plug connection, heated oxygen sensor

49–7280 Removing, installing, replacing and bolting exhaust system as of plug connection

Operation no. of operation texts and work units or standard texts and flat rates:
49–7280.

A. Model 107

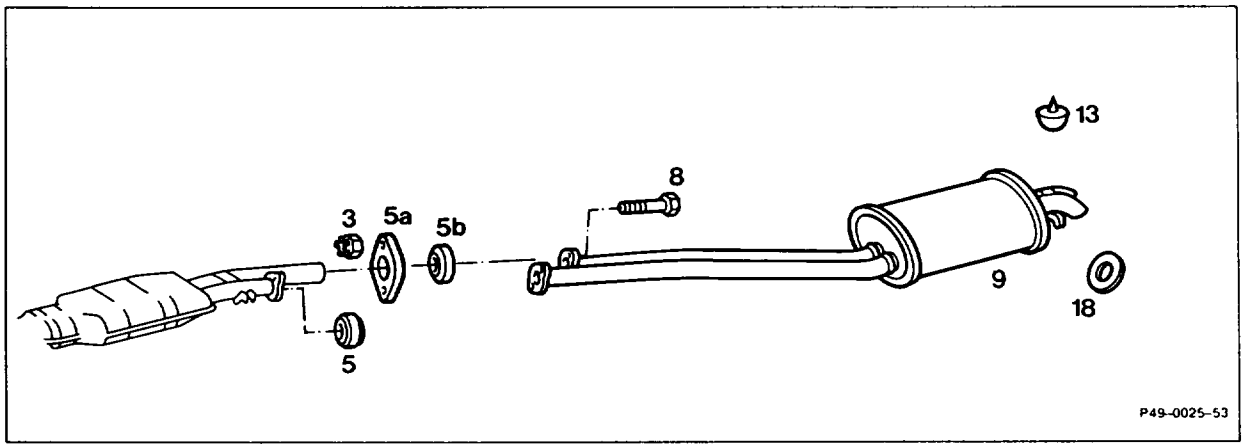

Bolted joints self-locking nuts (3), bolts (8)	remove, fit on. Replace self-locking nuts (3), bolts (8). Tightening torque 20 Nm (reference value).
Tail silencer (9)	detach from rubber ring (18), take off, fit on and attach. **Installation note** Check tail silencer (9), rubber ring (18) and rubber stop (13) for wear; exchange if necessary.
Sintered seal (5), flange (5a), graphite seal (5b) . .	check suitability for reuse, replace if necessary. **Installation note** Ensure parts are correctly installed.
Exhaust system	with engine running, check for leaks.

Note

If necessary, use emery cloth to remove combustion or corrosion residues from the tapered connectors of the pipes (2, 7) and sintered seal (5).

Ensure parts are correctly installed.

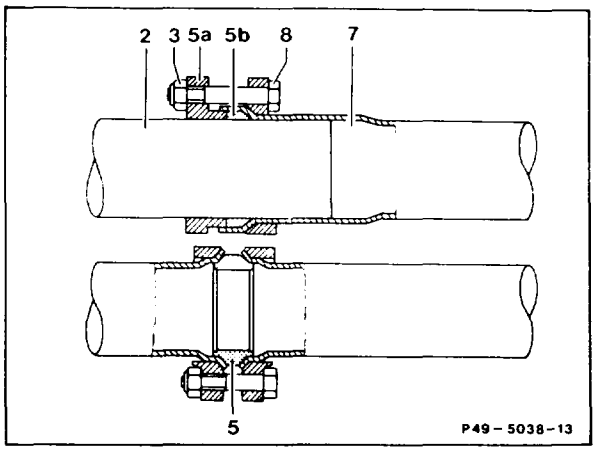

2 Front exhaust pipe
3 Self-locking nut
5 Sintered seal
5a Flange
5b Graphite seal
7 Middle exhaust pipe
8 M8 bolt

B. Model 124

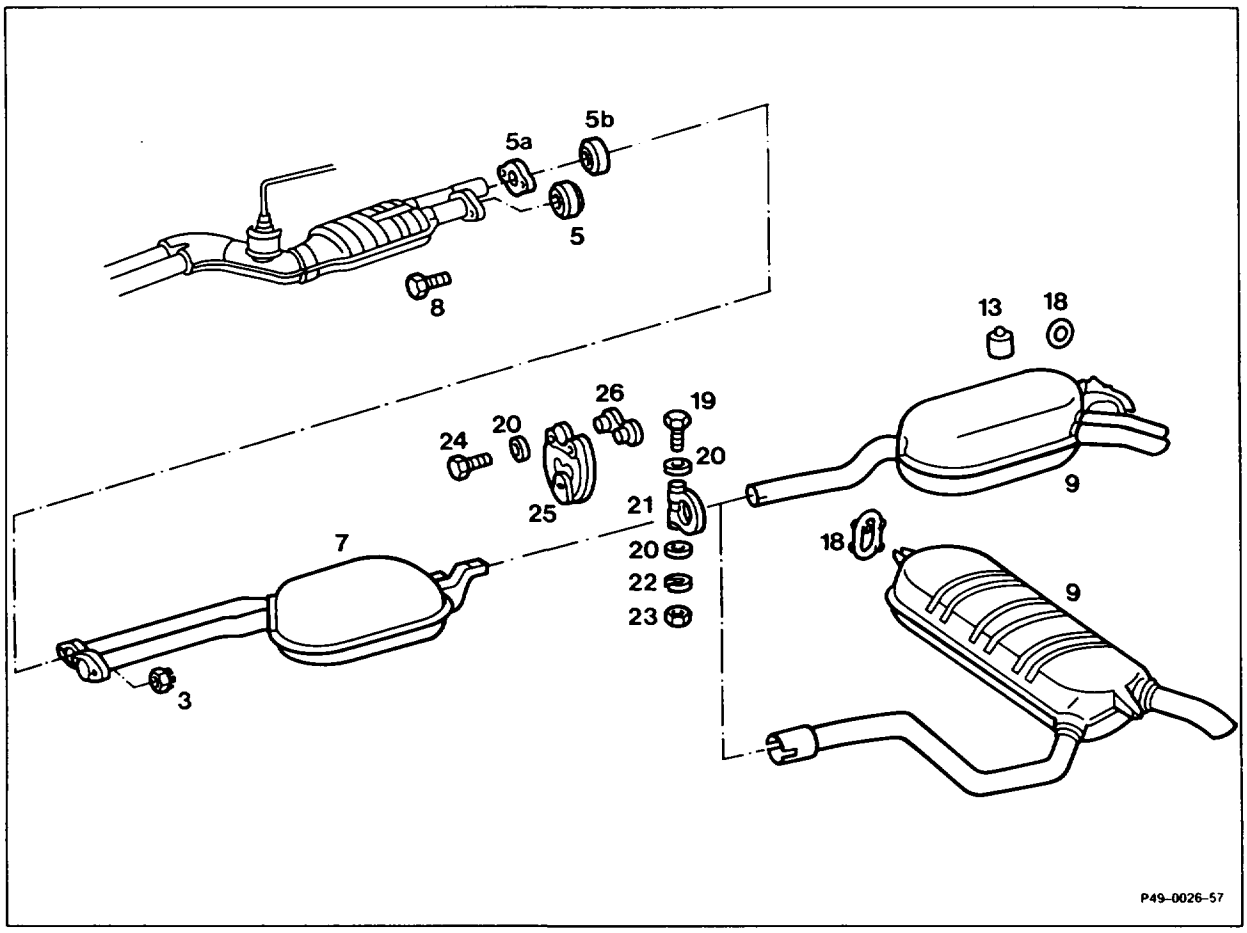

Bolt (19), washers (20), spring lock washer (22), nut (23)	take off, check, replace if necessary, fit on. Tightening torque 25 Nm (reference value).
Bolted joints (self-locking nuts) (3), bolts (8)	take off, fit on. Replace self-locking nuts (3), bolts (8). Tightening torque 20 Nm (reference value).
Tail silencer (9)	detach from rubber ring (18), take off, fit on and attach.

Installation note

Check tail silencer (9) and rubber ring (18) for wear; exchange if necesary.

Pipe clip (21)	pull off from tail silencer (9), check, replace if necessary, fit on.
Bolts (24), washers (20), suspension plate (25) and tensioning plate (26)	take off, check for wear and fit on.
Middle silencer (7)	take off, fit on.
Sintered seal (5), flange (5a), graphite seal (5b)	check suitability for reuse, replace if necessary.

Installation note

Ensure parts are correctly installed.

Rubber stop (13)	check for wear, replace if necessary.
Exhaust system	with engine running, check for leaks.

Note

If necessary, use emery cloth to clean combustion or corrosion residues from the tapered connectors of the pipes (2, 7) and sintered seal (5).

Ensure parts are correctly installed.

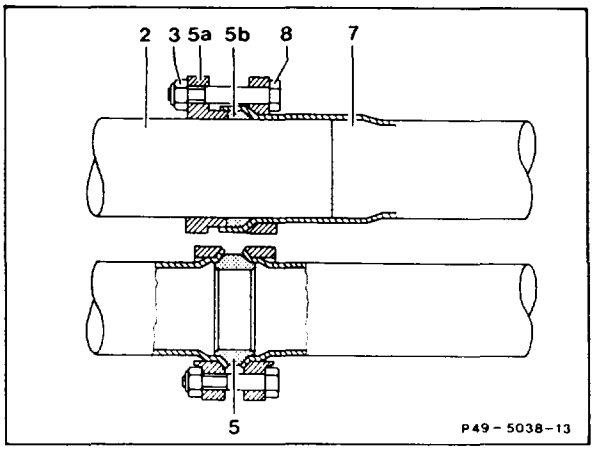

2 Front exhaust pipe
3 Self-locking nut
5 Sintered seal
5a Flange
5b Graphite seal
6 Sintered seal
7 Middle exhaust pipe
8 M8 bolt

C. Model 126

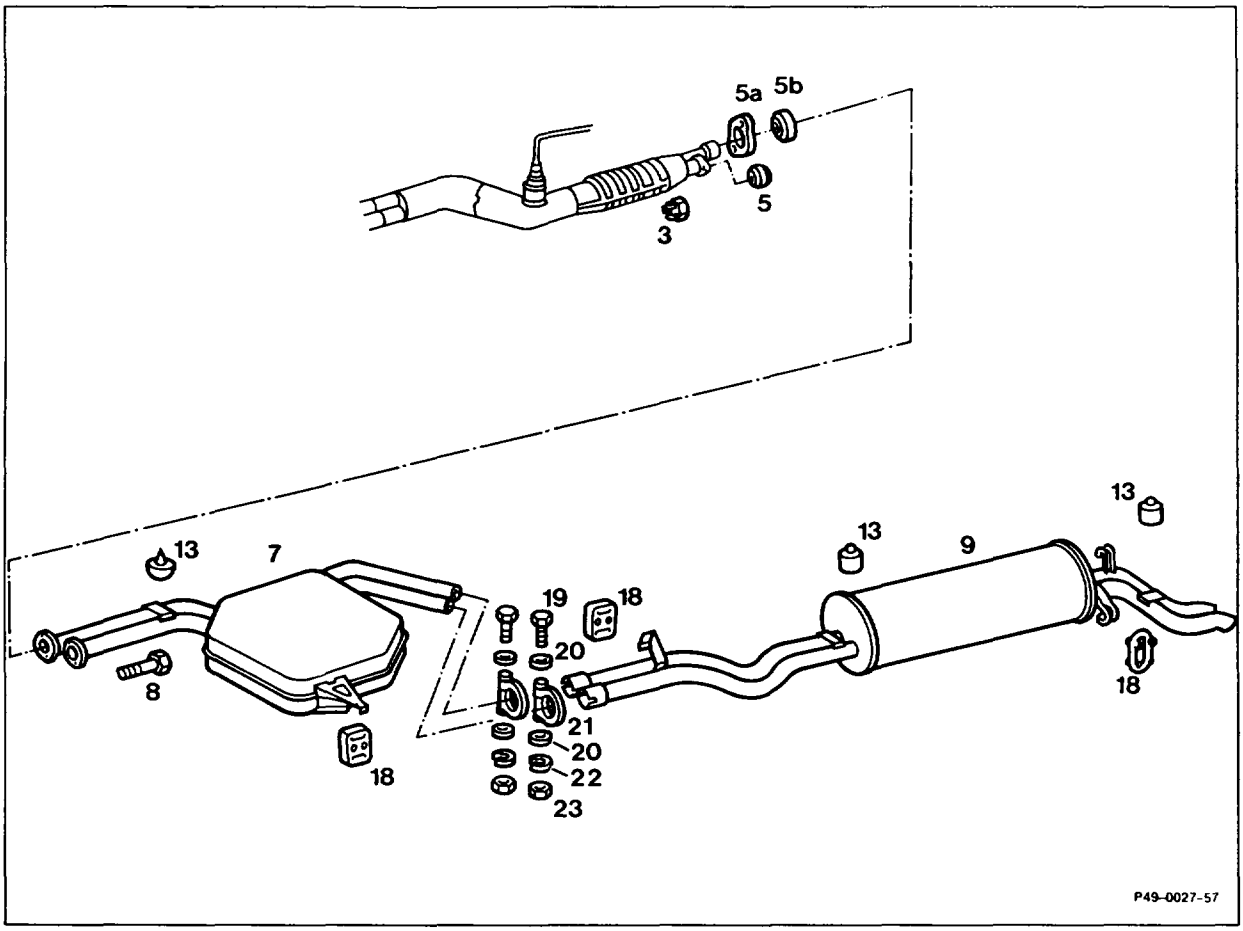

Bolts (19), washers (20), spring lock washers (22), nuts (23)	take off, check, replace if necessary, fit on. Tightening torque 25 Nm (reference value).
Bolted joints self-locking nuts (3), bolts (8)	take off, fit on. Replace self-locking nuts (3), bolts (8). Tightening torque 20 Nm (reference value).
Tail silencer (9)	detach from rubber rings (18) take off, fit on, and attach.

Installation note

Check tail silencer (9) and rubber rings (18) for wear, exchange if necessary.

Pipe clips (21)	remove from tail silencer (9), check, replace if necessary, fit on.
Middle silencer (7)	detach from rubber ring (18), take off, fit on and attach.
	Installation note Check middle silencer (7) and rubber ring (18) for wear, exchange if necessary.
Sintered seal (5), flange (5a), graphite seal (5b)	check suitability for reuse, replace if necessary.
	Installation note Ensure parts are correctly installed.
Rubber stop (13)	check for wear, exchange if necessary.
Exhaust system	with engine running, check for leaks.

Note

If necessary, use emery cloth to clean combustion or corrosion residues off the tapered connectors of the pipes (2, 7) and sintered seal (5).

Ensure parts are correctly installed.

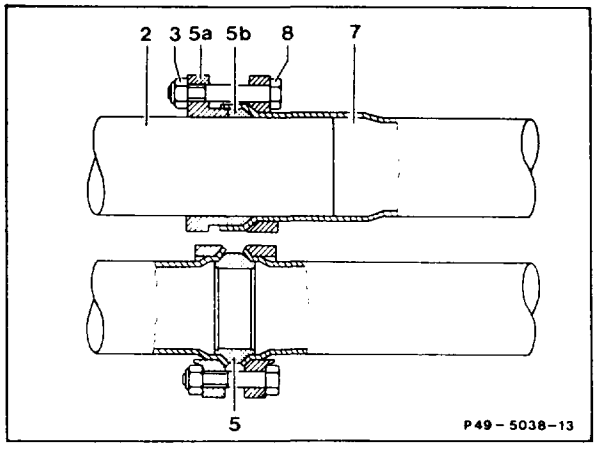

2 Front exhaust pipe
3 Self-locking nut
5 Sintered seal
5a Flange
5b Graphite seal
7 Middle exhaust pipe
8 M8 bolt

D. Model 129

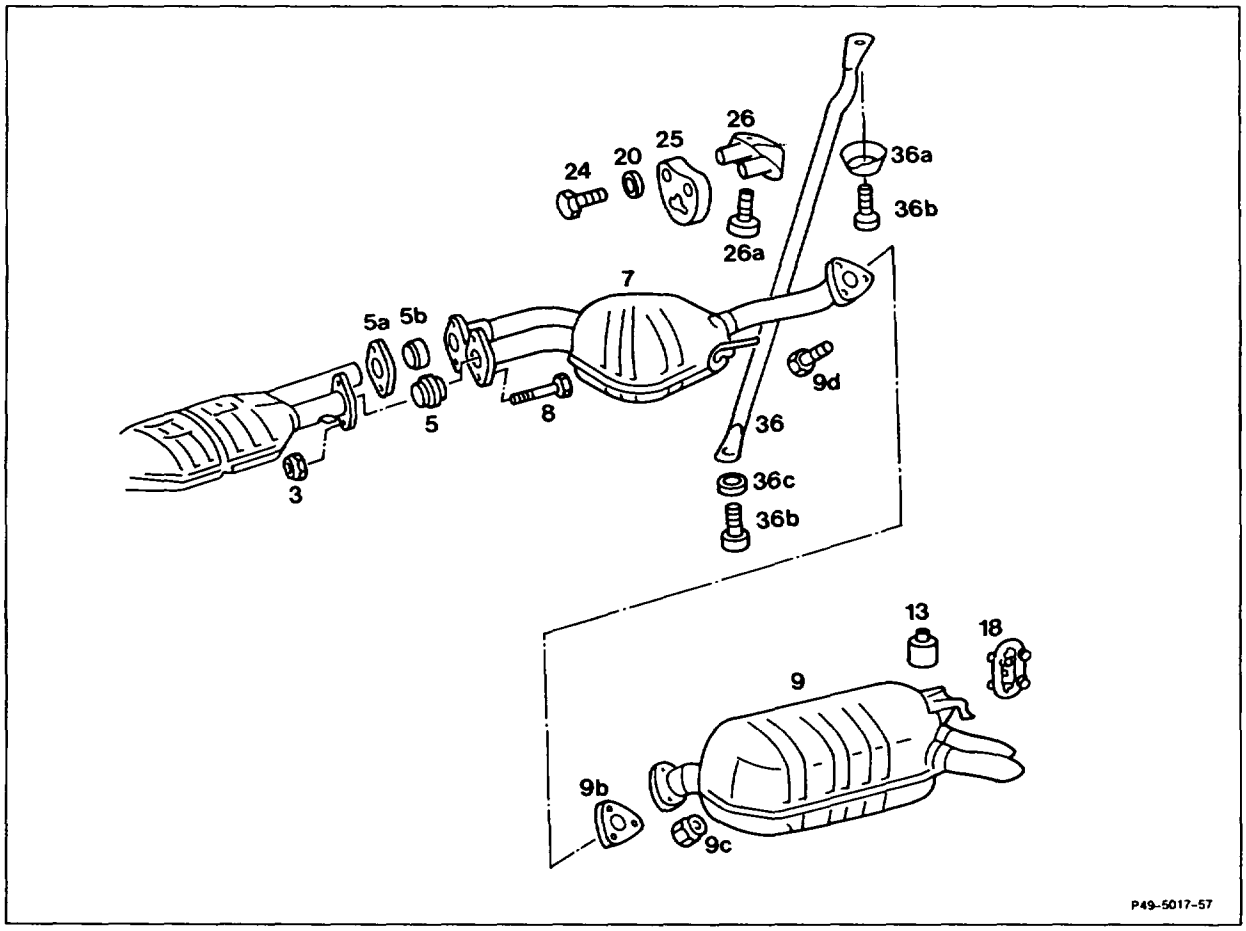

Self-locking bolts (36b)	unscrew, screw in.
	Installation note Replace bolts. Tightening torque 120 Nm.
Left frame cross strut (36), washer (36c) and reinforcing plate (36a)	take off, fit on.
Bolted joints self-locking nuts (3, 9c), bolts (8, 9d)	take off, fit on. Replace self-locking nuts (3, 9c), bolts (8, 9d). Tightening torque 20 Nm (reference value).
3-hole flange gasket (9b)	replace.
	Installation note Ensure part is correctly installed.

Tail silencer (9)	detach from rubber ring (18), take off, fit on and attach.
	Installation note Check tail silencer (9) and rubber ring (18) for wear, exchange if necessary.
Bolts (24, 26a), washers (20), suspension plate (25) and tensioning plate (26)	take off, check for wear and fit on.
Middle silencer (7)	take off, fit on.
Sintered seal (5), flange (5a), graphite seal (5b)	check suitability for reuse, replace if necessary.
	Installation note Ensure parts are correctly installed.
Rubber stop (13)	check for wear, exchange if necessary.
Exhaust system	with engine running, check for leaks.

Note

If necessary, use emery cloth to clean combustion or corrosion residues off the tapered connectors of the pipes (2, 7) and sintered seal (5).

Ensure parts are correctly installed.

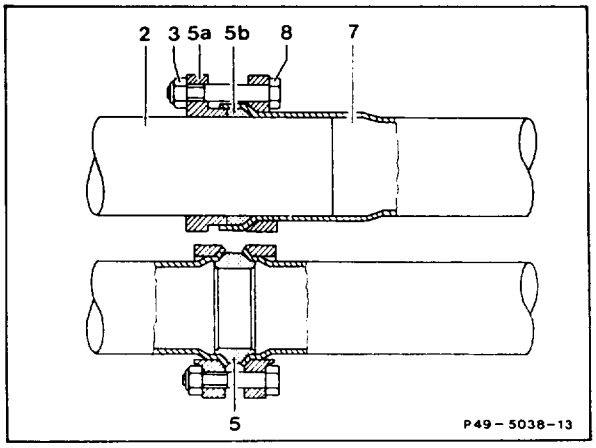

2 Front exhaust pipe
3 Self-locking nut
5 Sintered seal
5a Flange
5b Graphite seal
7 Middle exhaust pipe
8 M8 bolt

E. Model 201

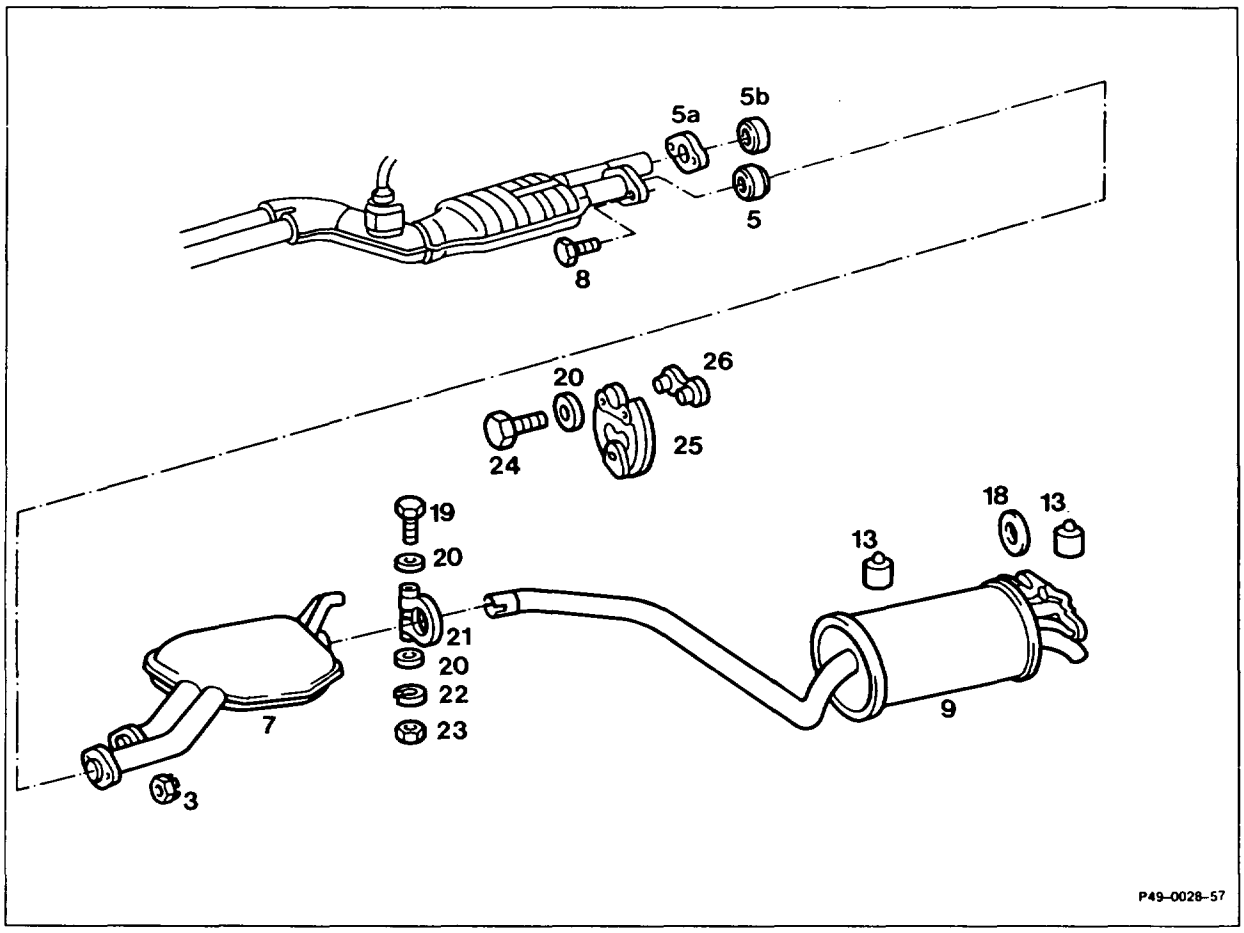

Bolt (19), washers (20), spring lock washer (22) and nut (23)	take off, check, replace if necessary, fit on.
Bolted joints self-locking nuts (3), bolts (8)	take off, fit on. Replace self-locking nuts (3), bolts (8). Tightening torque 20 Nm (reference value).
Tail silencer (9)	detach from rubber ring (18), take off, fit on and attach.

Installation note

Check tail silencer (9) and rubber ring (18) for wear, exchange if necessary.

Pipe clip (21)	remove from tail silencer (9), check, replace if necessary, fit on.
Bolts (24), washers (20), suspension plate (25) and tensioning plate (26)	take off, check for wear and fit on.
Middle silencer (7)	take off, fit on.
Sintered seal (5), flange (5a), graphite seal (5b)	check suitability for reuse, replace if necessary.

Installation note
Ensure parts are correctly installed.

Rubber stop (13)	check for wear, exchange if necessary.
Exhaust system	with engine running, check for leaks.

Note
If necessary, use emery cloth to clean combustion or corrosion residues off the tapered connectors of the pipes (2, 7) and sintered seal (5).

Ensure parts are correctly installed.

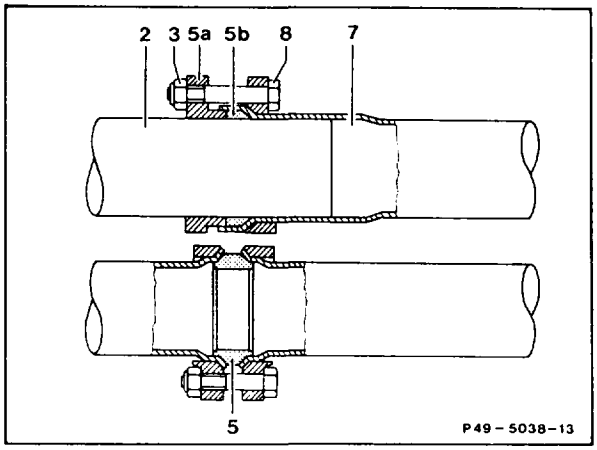

2 Front exhaust pipe
3 Self-locking nut
5 Sintered seal
5a Flange
5b Graphite seal
7 Middle exhaust pipe
8 M8 bolt

49–8701 Replacing carrier for exhaust bracket at transmission

Operation no. of operation texts and work units or standard texts and flat rates:
49–8701.

A. Models 124, 126, 201

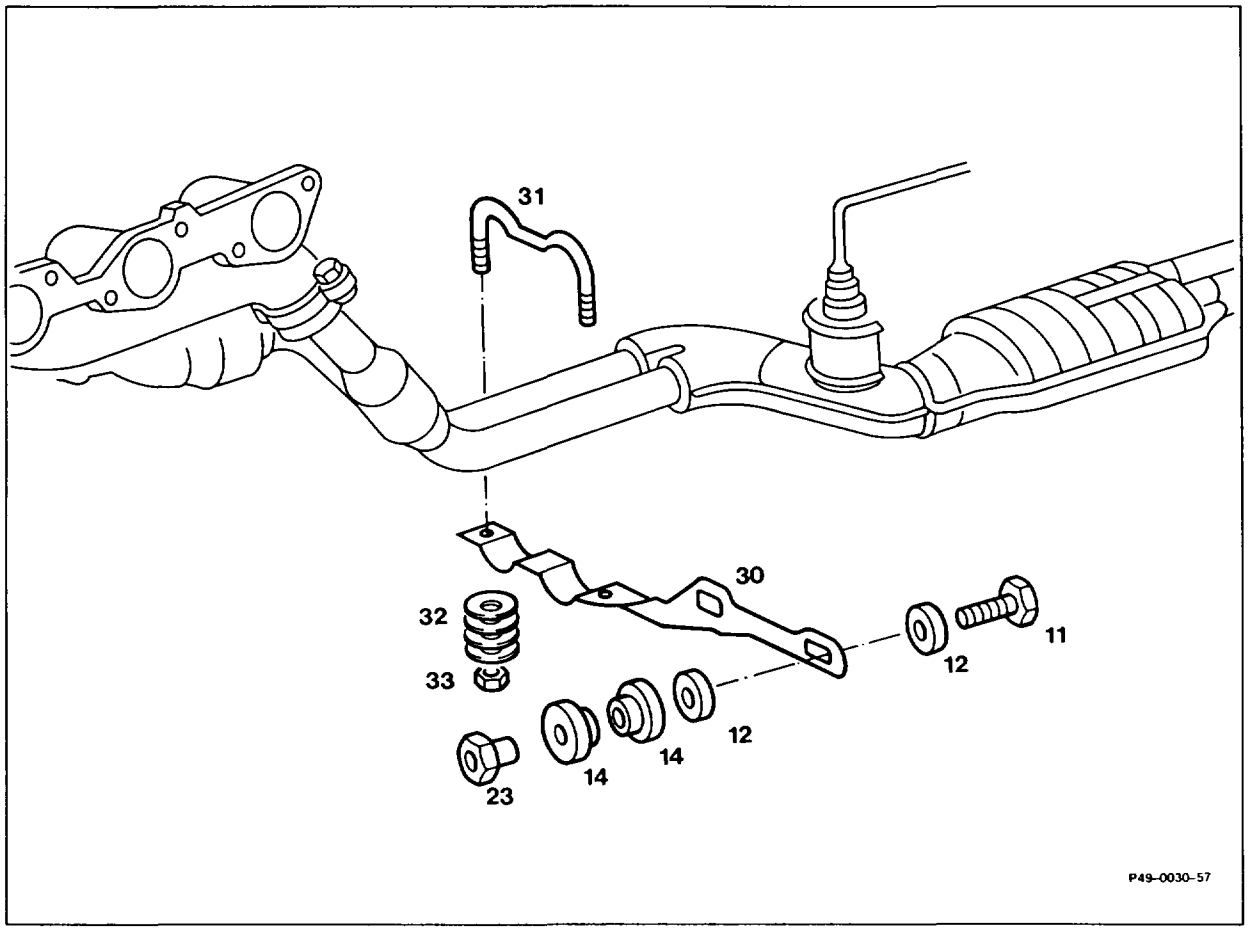

Shown on model 124

Retaining bar (31) with dished springs (32) and self-locking nuts (33)	take off, fit on. Tightening torque 7 Nm (reference value).
Carrier (30) with screws (11), washers (12), rubber washers (14) and nuts (23)	take off, fit on. Tightening torque 20 Nm (reference value).

Note
Check parts, replace if necessary.

B. Model 129

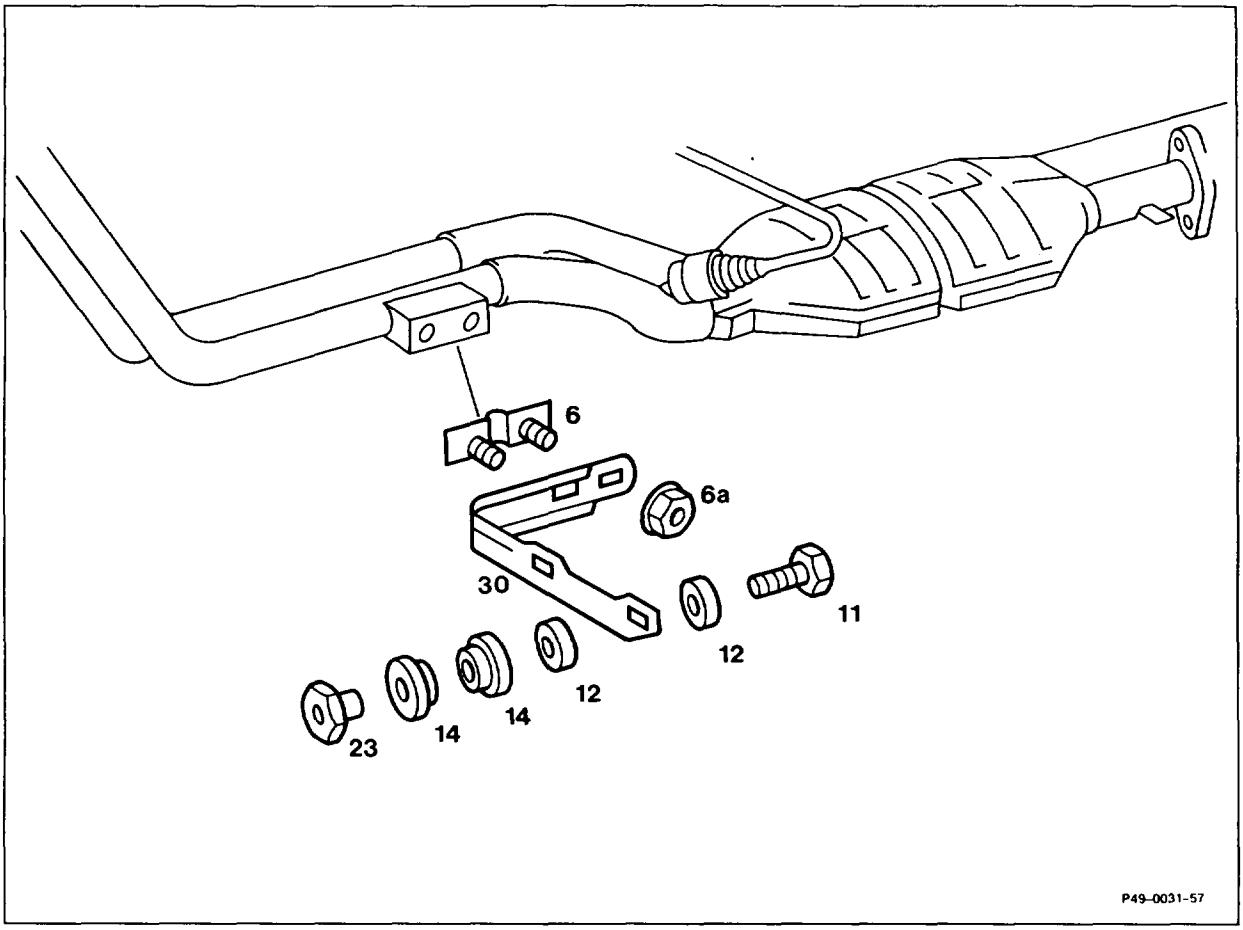

Self-locking nuts (6a)	unscrew, screw on, replace. Tightening torque 20 Nm (reference value).
Carrier (30) with screws (11), washers (12), rubber washers (14) and nuts (23)	take off, fit on. Tightening torque 20 Nm (reference value).
	Installation note Check parts, replace if necessary.
Threaded plate (6)	check suitability for reuse, replace if necessary.

Checking and correcting battery fluid level

5410

All models except 129

Fluid	distilled water only
Quantity	as required

Note:
Check fluid level more often when outside temperatures are high.

Batteries with overfill protection feature

- Check fluid level against markings on case.
- If distilled water must be added or the fluid level is not visible from outside unscrew all caps and add distilled water until the water no longer drains from the overfill protection.

Note:
When adding water do not push through the overfill protection membrane.

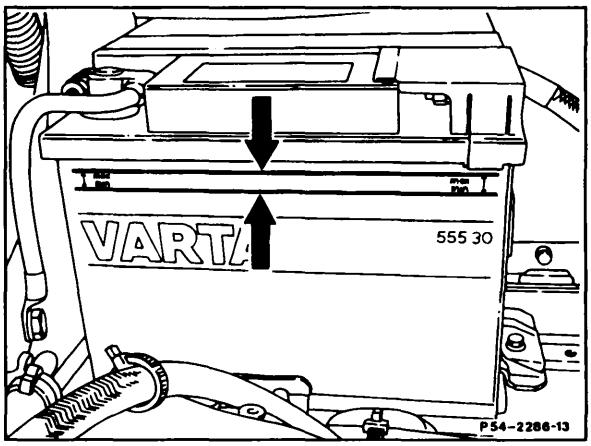

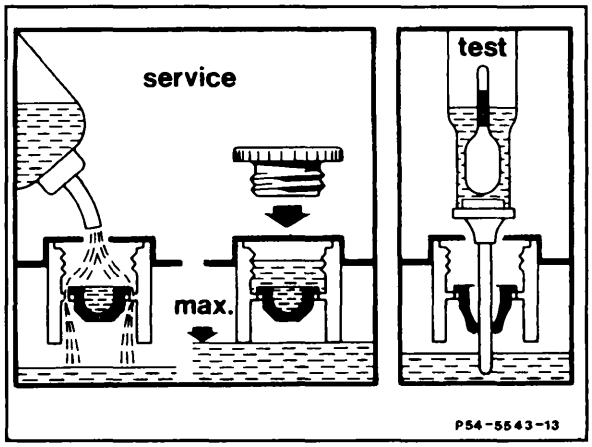

Batteries without overfill protection feature

- Unscrew or pull out all caps according to design.

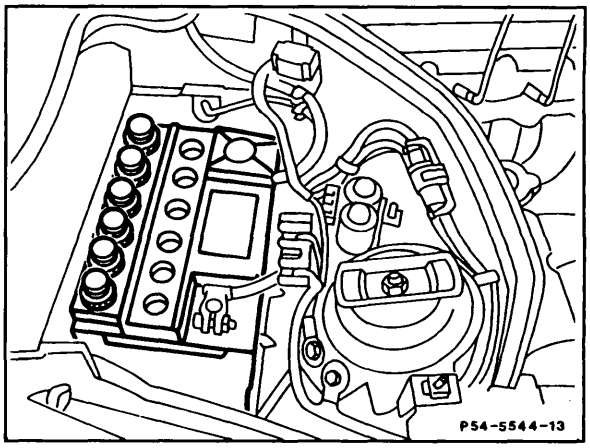

- Check fluid level in filler opening of cells and, if necessary, add fluid up to the inner marking.

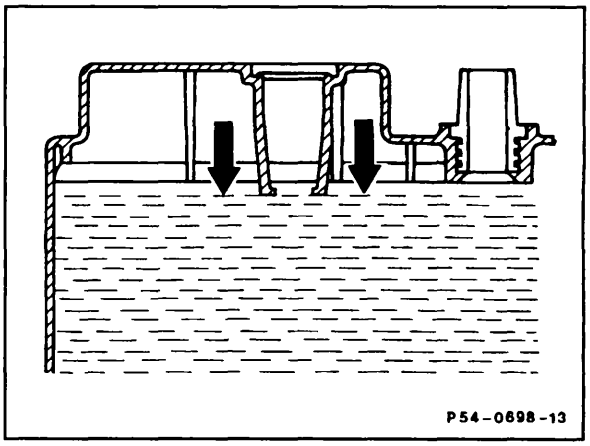

Checking warning and indicator lamps

5451

All models

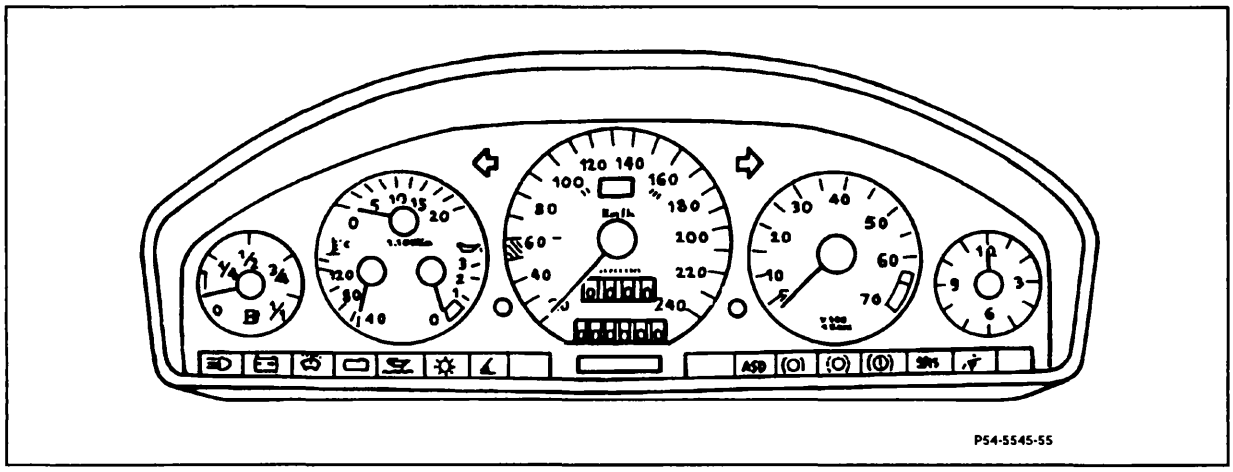

Functional check - ignition key in position 2.

- Check warning lamps:

- Check indicator lamps:

Fuel reserve (starting 09.1982).
charge indicator lamp
Brake pad wear indicator
ABS
Pre-glow
ETR, SRS Airbag - restraint system - should go out after approx. 10 s.
O_2 sensor replacement up thru model year 1985
O_2 sensor failure indicator starting model year 1986 (except 201.024) lights up briefly when switching ignition on.
Turn signal lamp left and right
Headlamp flasher
Parking brake and brake fluid level
Engine oil level indicator
Coolant level indicator
Washer fluid level indicator
Bulb failure warning unit.
Seat belt/backrest lock warning lamp
4MATIC function indicator
4MATIC warning lamp
Roll bar indicator lamp
Oil pressure waning lamp
CHECK ENGINE lamp

Copyright DaimlerChrysler AG 09.01.2003 CD-Ausgabe G/05/02 Will not be recorded by Modification services

Installation instructions for special equipment

Electric outside temperature gauge

Mercedes-Benz service

Revision: Speed-dependent electric outside temperature gauge

Model 124 lefthand steering

54.6

Scope

1 Disconnect grounding line on battery.

2 Loosen fuse carrier and put aside.

3 Remove lefthand front floor mat

4 Remove radio screen or radio.

5 Remove lower half of lefthand cover under instrument panel.

6 Remove instrument cluster.

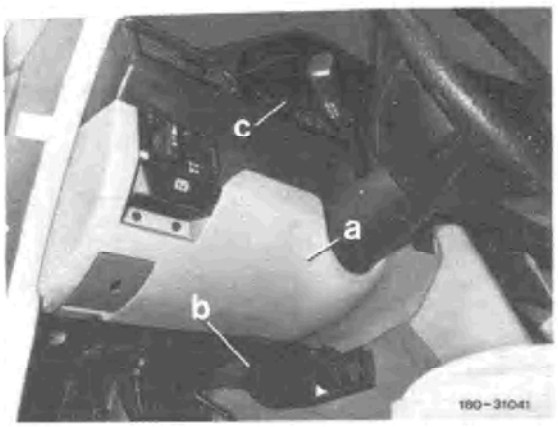

b Cover, bottom
c Instrument cluster

7 Pull out symbol strip (arrow) on instrument cluster.

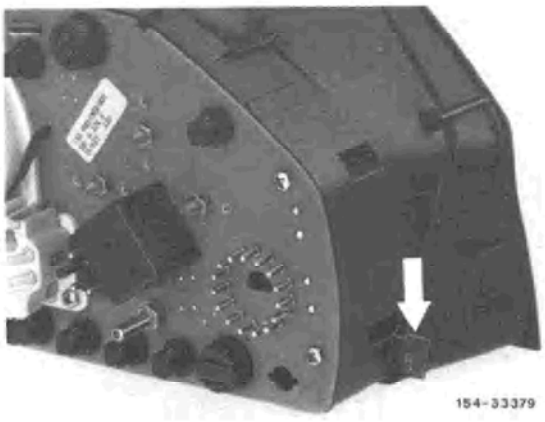

Copyright DaimlerChrysler AG 09.01.2003 CD-Ausgabe G/05/02 Will not be recorded by Modification services

Copyright DaimlerChrysler AG 09.01.2003 CD-Ausgabe G/05/02 Will not be recorded by Modification services

8 Cut off blue field of symbol strip (no longer required.

9 Slip shortened symbol strip back again into instrument cluster.

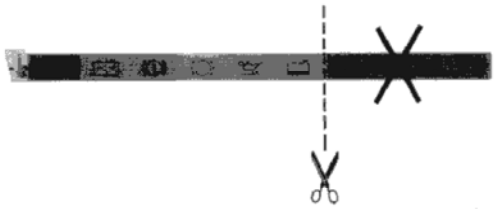

154-33378

10 Introduce outside temperature gauge into its shaft in instrument cluster and fasten with 2 screws.

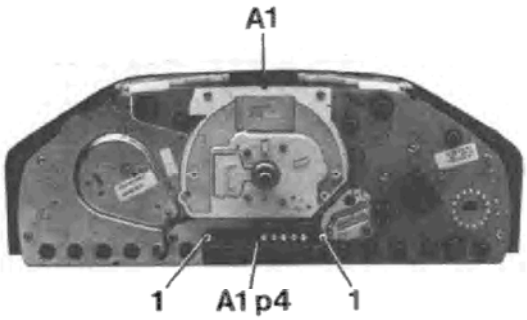

154-35 320

1 Screw B3.5 x 16
A1 Instrument cluster
A1p4 Outside temperature gauge

Vehicles with Hall-effect sensor only

11 Break out cut-out for Hall-effect sensor on instrument cluster.

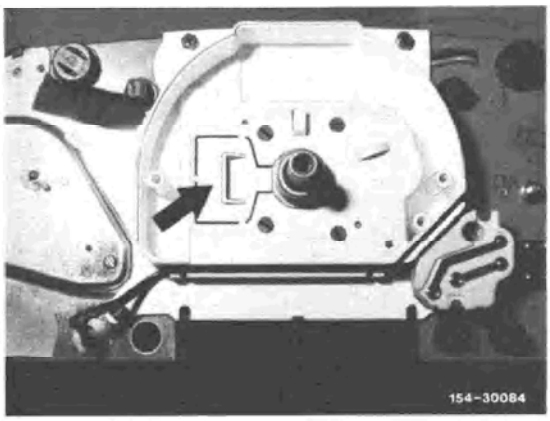

154-30084

12 Screw Hall-effect sensor to instrument cluster.

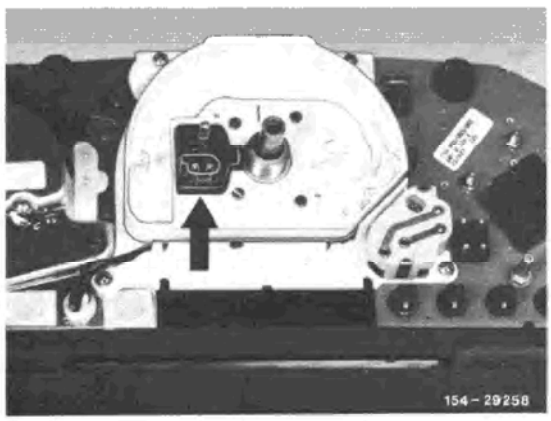

154-29258

Copyright DaimlerChrysler AG 09.01.2003 CD-Ausgabe G/05/02 Will not be recorded by Modification services

Copyright DaimlerChrysler AG 09.01.2003 CD-Ausgabe G/05/02 Will not be recorded by Modification services

13 Connect brown line of auxiliary harness Hall-effect sensor to main grounding point (W1, arrow) in instrument cluster cut-out.

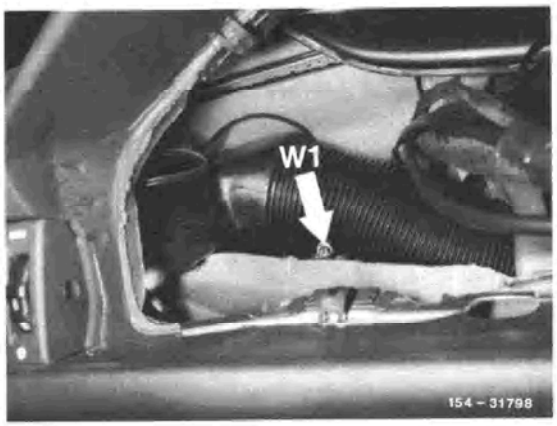

W1 Main ground (behind instrument cluster)

14 Install black/red-violet line from harness for Hall-effect sensor to fuse carrier (a) and connect to output of fuse 5.

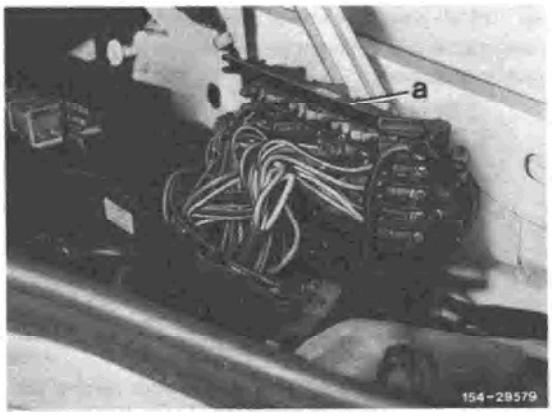

Vehicles with Hall-effect sensor only

15 Mount multipoint connector, Hall-effect sensor to holder.

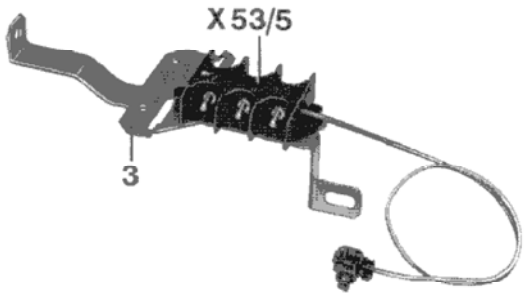

3 Holder
X53/5 Multipoint connector, Hall-effect sensor

16 Fasten multipoint connector, Hall-effect sensor with holder to lefthand upper fastening of heater box and to steering column console and connect all speed signal lines.

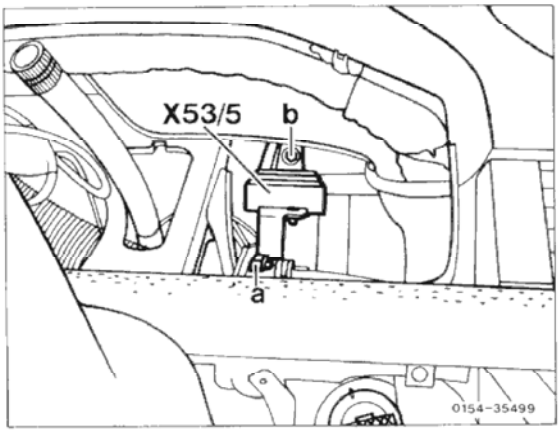

X53/5 Multipoint connector, Hall-effect sensor
a Nut M10
b Nut M6

Copyright DaimlerChrysler AG 09.01.2003 CD-Ausgabe G/05/02 Will not be recorded by Modification services

Copyright DaimlerChrysler AG 09.01.2003 CD-Ausgabe G/05/02 Will not be recorded by Modification services

All vehicles

17 Pull lacings of auxiliary harness with double connector and black/red line from interior into fuse and relay box and connect the black/red line to output of fuse 6.

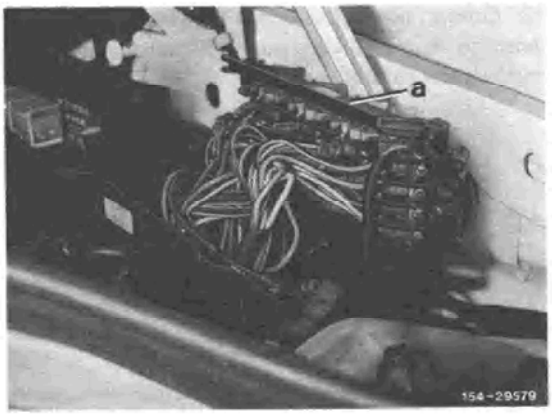

a Fuse carrier

18 Install grey/blue line of auxiliary harness along main harness to terminal block (X6, arrow) on heater box and connect.

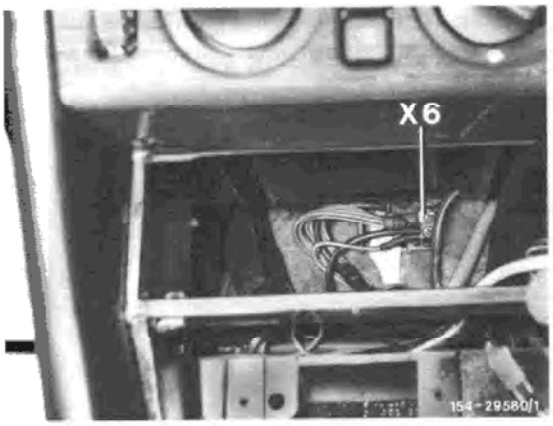

X6 Terminal block terminal 58d

19 Connect brown line of auxiliary harness to main grounding point (W1, arrow) in instrument cluster cutout.

20 Install instrument cluster, while also connecting the auxiliary harnesses for outside temperature gauge and Hall-effect sensor or multipoint connection.

21 Remove number plate, front.

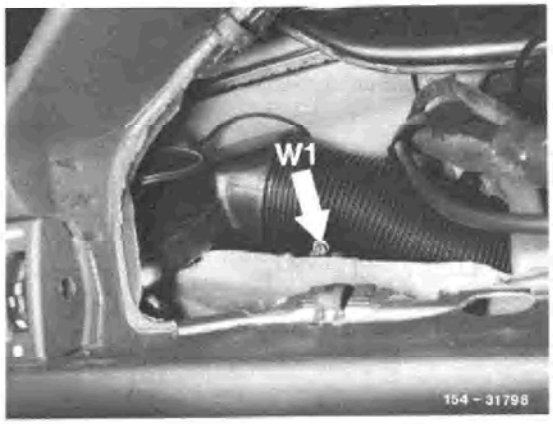

W1 Main ground (behind instrument cluster)

22 Remove rubber plug on front bumper or mark opening according to Fig. and drill to 25 mm dia.

23 Mark fastening hole for temperature sensor and drill to 3.5 mm dia. (vehicles without fastening hole only).

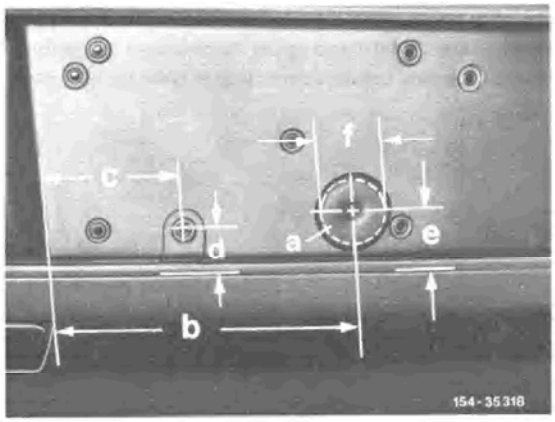

a Rubber plug
b 150 mm
c 95 mm
d 25 mm
e 35 mm
f 25 mm dia.

Copyright DaimlerChrysler AG 09.01.2003 CD-Ausgabe G/05/02 Will not be recorded by Modification services

Copyright DaimlerChrysler AG 09.01.2003 CD-Ausgabe G/05/02 Will not be recorded by Modification services

24 Slip grommet included in delivery on temperature sensor line.

25 Fasten temperature sensor to bumper with sheet metal screw BZ 3.5 x 9.5.

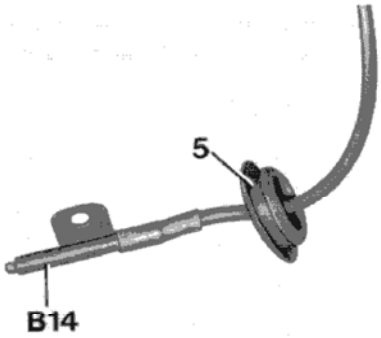

5 Rubber grommet
B14 Temperature sensor outside temperature gauge

26 Install temperature sensor line through opening of cover plate into bumper.

27 Fasten cover plate with sheet metal screw B 4.8 x 19, insert rubber grommet into opening of bumper and install temperature sensor line into recess of cover plate.

28 Mount number plate with new screws B 4.8 x 19 mm.

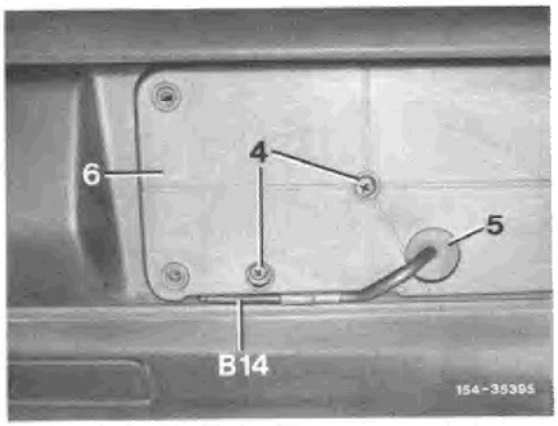

4 Sheet metal screw
5 Rubber grommet
6 Cover plate
B14 Temperature sensor, outside temperature gauge

29 Push lower edge of bumper away in forward direction (arrows). Then install temperature sensor line toward lefthand side member and fasten with clamps.

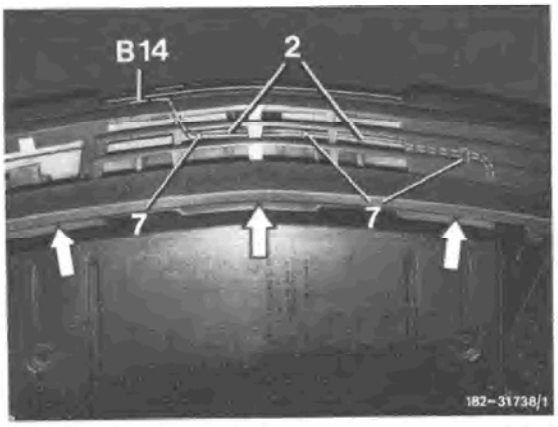

2 Temperature sensor line
7 Clamp
B14 Temperature sensor, outside temperature gauge

30 Fasten temperature sensor line to lefthand side member with cable strap.

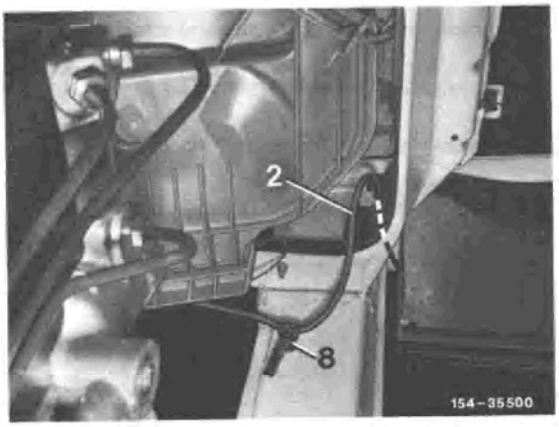

2 Temperature sensor line
8 Cable strap

Copyright DaimlerChrysler AG 09.01.2003 CD-Ausgabe G/05/02 Will not be recorded by Modification services

Copyright DaimlerChrysler AG 09.01.2003 CD-Ausgabe G/05/02 Will not be recorded by Modification services

31 Install temperature sensor line along headlamp harness, left, and fasten with available cable straps.

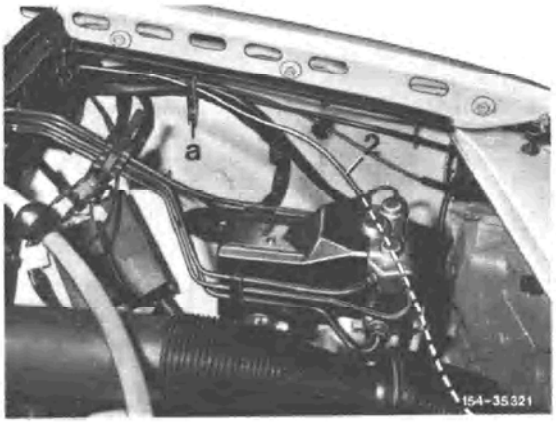

2 Temperature sensor line
a Available cable strap

32 Install temperature sensor line through unit compartment partition and rubber grommet (arrows) into fuse box.

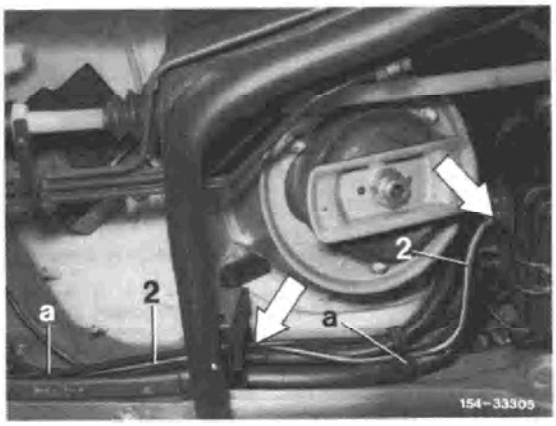

2 Temperature sensor line
a Available cable strap

33 Mount plug housing to line of temperature sensor. Connect temperature sensor to auxiliary harness.

34 Mount fuse and relay carrier.

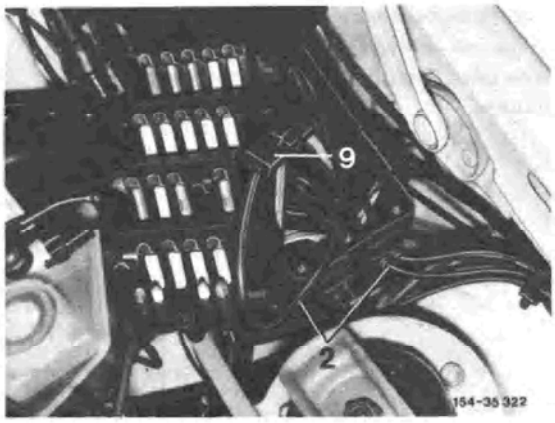

2 Temperature sensor line
9 Plug housing

35 Install radio screen or radio and ashtray.

36 Install cover under instrument panel, left.

37 Install floor mat front left.

38 Connect grounding line to battery.

39 Check outside temperature gauge for function.

Copyright DaimlerChrysler AG 09.01.2003 CD-Ausgabe G/05/02 Will not be recorded by Modification services

Copyright DaimlerChrysler AG 09.01.2003 CD-Ausgabe G/05/02 Will not be recorded by Modification services

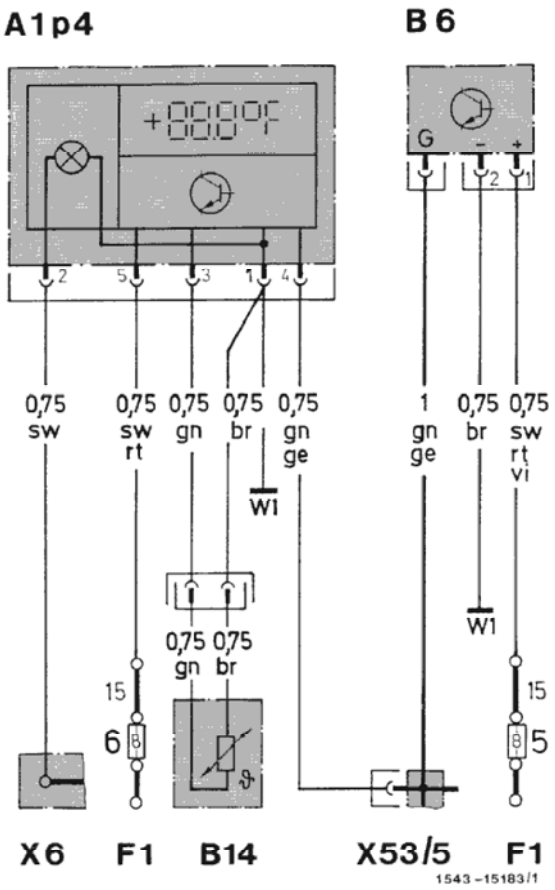

Wiring diagram

A1p4 Outside temperature gauge
B6 Hall-effect speed sensor
B14 Temperature sensor outside temperature gauge
F1 Fuse and relay box
Fuse 5, terminal 15
Fuse 6, terminal 15
W1 Main ground (behind instrument cluster)
X6 Terminal block terminal 58d
X53/5 Multipoint connector/Hall-effect sensor

How-to-order note

Take parts required for installation from the following spare parts data:

Scope Hall-effect sensor[1]) Hall-effect sensor harness[1]) Multipoint connector Hall-effect sensor[2])	ET fiche Group 54
Holder[2])	ET fiche Group 82

1) On vehicles without Hall-effect sensor only
2) On vehicles with Hall-effect sensor only

Available from: Plant 50 (PEW Sindelfingen)

Copyright DaimlerChrysler AG 09.01.2003 CD-Ausgabe G/05/02 Will not be recorded by Modification services

Copyright DaimlerChrysler AG 09.01.2003 CD-Ausgabe G/05/02 Will not be recorded by Modification services

Mercedes-Benz

service information

TO: OUR MERCEDES-BENZ PASSENGER CAR DEALERS

DATE: November 1993 (Supersedes S.I. MBNA 54/40, Nov. 1992) **REF. NO.** MBNA 54/40a

Revision: ***Model applicability, and revised text.***

SUBJECT: **ALL MODELS**
BATTERY JUMP-STARTING AND CHARGING

With the increasing number of complex electronic control modules in modern automobiles comes an increased risk of electronic component damage when working with the battery. To avoid damage to the vehicle's electrical system, certain procedures must be followed.

⚠WARNING!
Batteries contain sulfuric acid and generate a highly flammable and explosive hydrogen gas. Always wear eye protection, preferably chemical safety goggles or a face shield when working on or near batteries. Never lean over a battery. Improper connecting or disconnecting of battery terminals, jumper cables or charger clamps can create sparks. A spark, flame or lighted cigarette can cause a battery to explode and cause serious facial/eye injuries. Never jump start or charge a frozen battery, this may cause the battery to explode. A frozen battery must be first thawed out before jump starting or charging.

Refer to S.I. MBNA 54/38 (October 1993) for a complete description of proper battery care and handling procedures.

Jump starting
⚠CAUTION!
The power surges generated during a typical jump start are substantial. While the electronic components in all Mercedes-Benz automobiles are designed to withstand a normal jump-starting attempt, damage may occur if the incorrect procedure is used. **Therefore, all service personnel are cautioned that Mercedes-Benz vehicles are to be jump started only from another 12 volt battery.** The use of starting devices (such as boost-start chargers, free-standing generators, etc.) is likely to cause extensive damage to the electrical system and its components.

© 1994 Mercedes-Benz of North America, Inc.
Mercedes-Benz Canada, Inc.
Service and Parts Literature

All rights reserved. Reproduction or translation in whole or in part is not permitted without authorization from the publisher. Printed in U.S.A.

General procedure for jump starting from one vehicle to another (follow procedure in Owner's Manual for specific vehicle applications)

1. Position the vehicle with the charged battery so that the jumper cables will reach, but never let the vehicles touch. Make sure the jumper cables do not have loose or missing insulation.
2. On both vehicles:
   - Turn off engine and all lights and accessories, except hazard warning flashers or work lamp.
   - Apply parking brake and shift selector lever to position "P".

Important!

3. Clamp one end of the first jumper cable to positive (+) terminal of the discharged battery and the other end to positive (+) terminal of the charged battery. Make sure the cable clamps do not touch any other metal parts.
4. Clamp one end of the second jumper cable to the grounded negative (−) terminal of the charged battery and the final connection to a grounded heavy metal bracket in the engine compartment or on the engine of the disabled vehicle (In case the disabled vehicle is a equipped with a trunk-mounted battery, make the final connection to either a grounded metal bracket or the battery ground wire where it attaches to the vehicle body.).
5. Start engine of the vehicle with the charged battery, switch off all unnecessary accessories and run at high idle. Make sure the cables are not on or near pulleys, fans, or other parts that will move when the engine is started. Then start engine of the disabled vehicle in the usual manner.
6. After the engine has started, remove jumper cables by exactly reversing the above installation sequence, starting with the last connection made first. When removing each clamp, make sure that it does not touch any other metal while the other end is still attached.

Jumper cable specifications

- Minimum cable cross-section of 25mm² or approx. 2 AWG
- Maximum length of 11.5 ft. (3.5m).

Charging

⚠CAUTION!

Always disconnect the battery from the vehicle's electrical system before connecting a battery charger. Most battery chargers generate voltage high enough to cause electrical system and component damage.

In all cases, the instructions in the owners manual should be followed. Damage caused by improper jump starting and/or charging is not covered under warranty, since this is considered a workshop risk.

Labeling

A warning label (Figure 1) is being installed in all models at the VPC. In case this label is missing or damaged, it may be ordered as a literature item through MB-NET. The labels are available individually

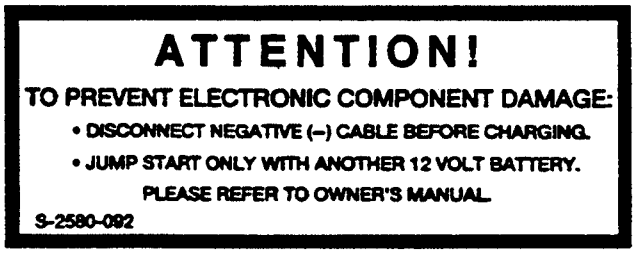

Figure 1

Description	Part Number	Dealer Net (S)
Battery charging warning label	S-2580-092	0.01

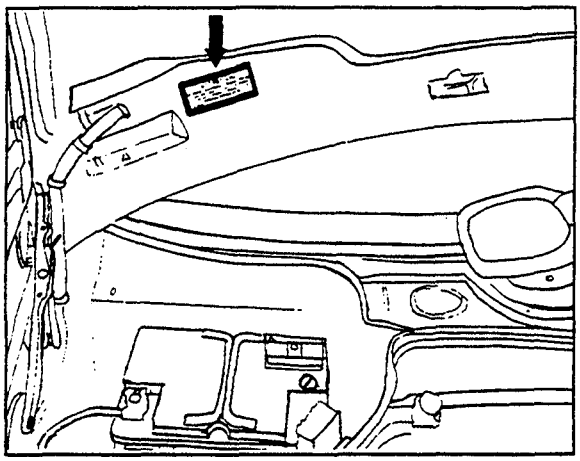

Figure 2 Model 124 (except 124.034/036)
On hood crossmember above battery.

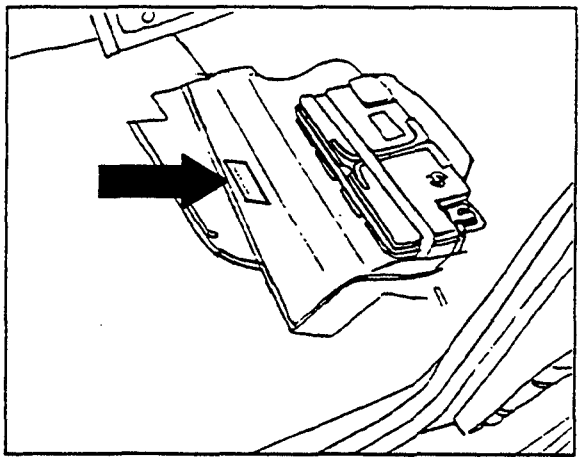

Figure 3 Model 124.034
Placed over existing sticker on underside of battery cover facing battery.

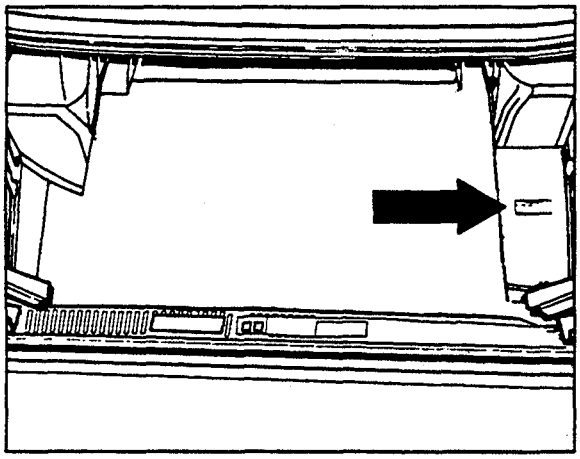

Figure 4 Model 124.036
On battery compartment cover, visible with floor mat lifted.

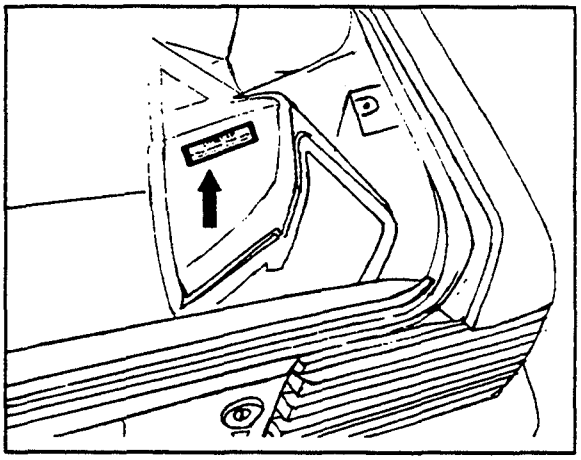

Figure 5 Model 129
On battery compartment cover, facing quarter panel above battery.

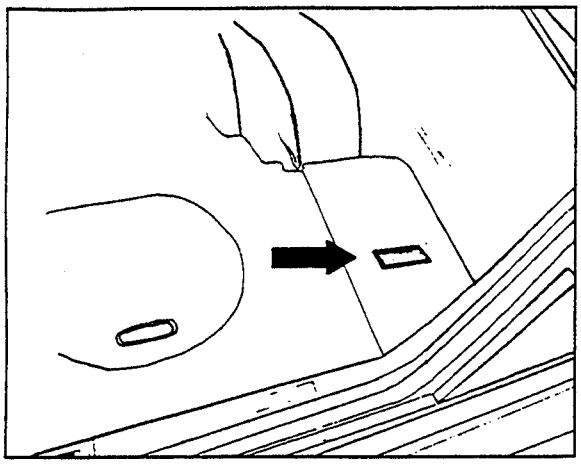

Figure 6 Model 140
On top of battery compartment cover, visible with floor mat lifted.

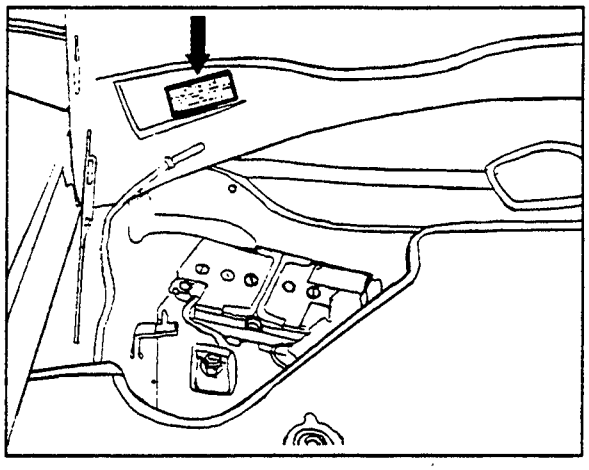

Figure 7 Model 201
On hood crossmember above battery.

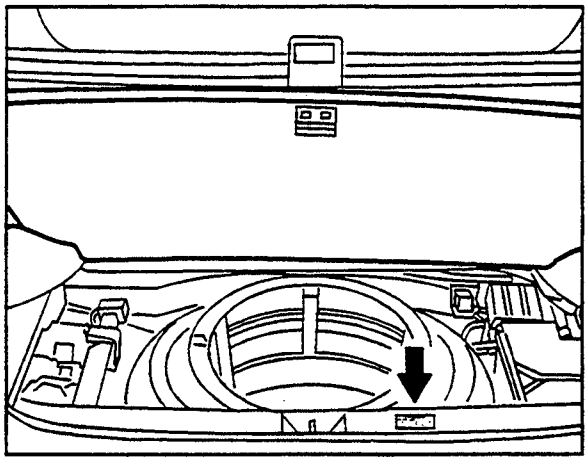

Figure 8 Model 202
On top of rear center piece trim cover

A. Warnings and safety precautions for lead acid batteries

P54-8561-59

(1) **Fire, sparks, naked flames and smoking prohibited:**

- Avoid sparks when handling cables and electrical equipment.
- Avoid short circuits.

(2) Wear eye protection.

(3) Keep acid and batteries away from children.

(4) **Risk of explosion:**
- A highly explosive gas mixture is produced when charging batteries.

(5) Pay attention to the instructions on the battery, in the instructions for use and in the Owner's Manual of the car.

(6) **Risk of burns:**
- Battery acid is extremely caustic.
- Wear protective gloves and eye protection.
- Do not tilt battery as electrolyte may flow out of the vent openings.

(7) **First aid:**
- If acid splashes into your eyes, rinse out immediately with clear water for several minutes. Then, consult a doctor without delay.
- If acid splashes onto your skin or clothing, neutralize immediately with acid converter or soap suds and wash out with plenty of water.
- If acid is swallowed, consult a doctor without delay.

(8) **Warning note:**
- Do not expose batteries unprotected to direct daylight.
- Discharged and faulty batteries may freeze up; always store in frost-free place.

(9) **Disposal:**
- Dispose of old batteries at an official collection point.
- Do not tilt batteries when transporting.
- Never dispose of old batteries in domestic refuse.

B. Filling the battery

⚠
Pay attention to warning notes and safety precautions (section A).

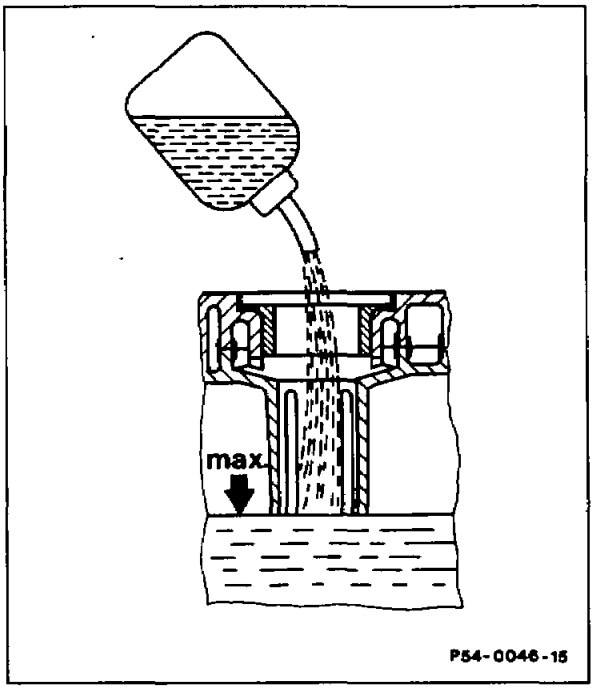

Version A

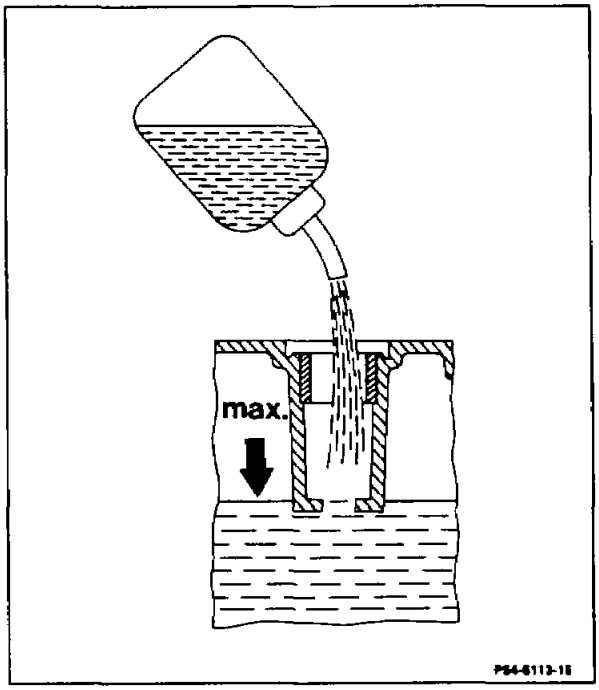

Version B

Cell caps	unscrew, screw in.
Electrolyte	add with a filling device up to the inner level marking.

Note
Version A: Up to lower edge of filler pipe.
Version B: Up to top edge of web.

54–0006 Treatment of battery when vehicle taken out of use

Preceding work:
Charging battery, checking condition and capacity, section A (54–1130).

Operation no. of operation texts and work units or standard texts and flat rates:

⚠
Pay attention to warning notes and safety precautions (op. no. 54–0001, section A).

Ground cable at battery . . . . . disconnect.

Note
This prevents the battery being discharged by open-circuit electrical components (clock etc.).

Every 3 months . . . . . recharge battery and then measure electrolyte density. **Specification** 1.28 kg/dm³, tropics 1.23 kg/dm³ (see table).

Note
On no account leave battery discharged otherwise sulphide cristals will form on the plates. Sulphated plates cause initial damage to the battery and result in a premature failure.

Antifreeze protection in °C at charging state

	normal	Tropics
charged	– 65	– 40
semi-charged	– 30	– 13
discharged	– 4	– 1

Note
The electrolyte density is dependent on temperature and alters by 0.01 kg/dm³ for each 15 °C.
Examples:

Electrolyte density at	20 °C	1.28 kg/dm³
Electrolyte density at	35 °C	1.29 kg/dm³
Electrolyte density at	5 °C	1.27 kg/dm³

54–0180 Installing separate fuse for blower motor (up to 06/86)

Operation no. of operation texts and work units or standard texts and flat rates:

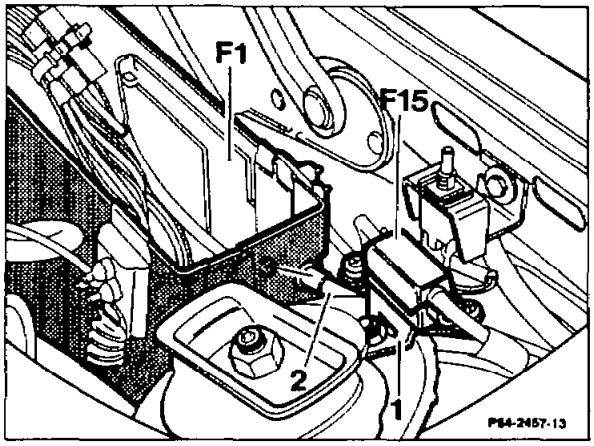

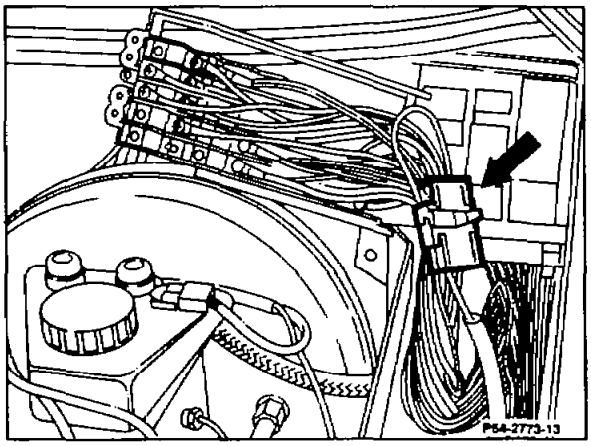

Ground cable at battery	disconnect.
Bracket (1) for auxiliary fuse box (F15) at left suspension dome	screw on.
Auxiliary fuse box (F15)	attach to bracket (1).
Fuse carrier	remove (54–1255).
Additional wiring harness (2)	run along existing wiring and run through grommet (3) into fuse and relay box (F1).
Cable (pink/grey) with cable shoe of auxiliary wiring harness (2)	connect at input fuse 12.
Cable (black/green)	disconnect at output fuse 12 and connect to 1-pin terminal block (arrow).
Terminal block (arrow)	secure to wiring harness in fuse and relay box (F1).
Fuse carrier	install (54–1255).
Ground cable at battery	connect.
Fuse insertion strip	replace.
Function check	perform.

Parts

Qty.	Designation	Part no.
1	Auxiliary wiring harness with fuse box	126 540 30 13
1	Bracket	124 545 53 40
1	Terminal block	000 540 08 69
1	Cable strap	001 997 42 90
2	4.2×13 self-tapping screws	007981 004244
1	Fuse insertion strip (USA) and French	124 545 09 00
1	Fuse insertion strip German and English	124 545 10 00
2	Screws	007985 004123
2	Spring lock washer	912004 004102

A. Function

A 5, 7 or 9-pin overvoltage protection relay is installed depending on the vehicle model and special equipment. This relay protects the control units (ABS, CIS-E, etc.) from excessively high voltage.

The battery voltage is present continuously at relay terminal 30. With the 7 and 9-pin versions the battery voltage is also connected to terminal 30a over the 10 A flat plug-in fuse. When the ignition/starter switch is turned to position 2 (driving position), the voltage is present at terminal 15 causing the relay to pull in. Power is supplied to terminals 87 (5-pin version) or 87E and 87L (7 and 9-pin versions).

Voltages > 22 V in the vehicle electrical system are connected directly to ground by the Z diode (fuse defective).

In the event of overloads occurring **after** the overvoltage cutout, the circuit is interrupted by the 10 A flat plug-in fuse. The 9-pin version is also fused separately at terminals 87E and 87L, whereby when the fuse for 87E blows 87L is also switched off.

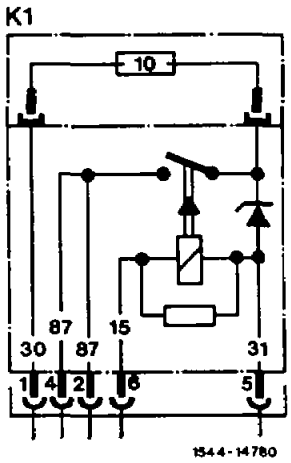

Circuit
Overvoltage protection, 5-pin

Circuit
Overvoltage protection, 7-pin

K1/1

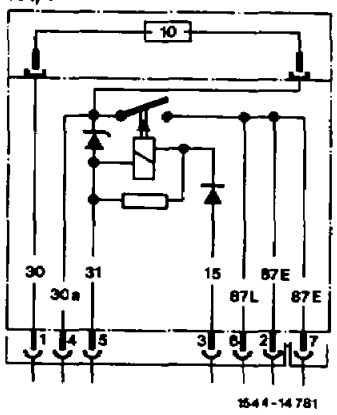

Circuit
Overvoltage protection, 9-pin

K1/2

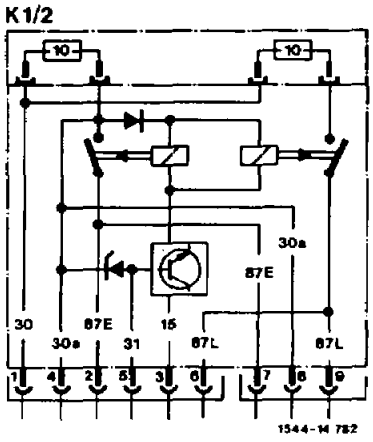

B. Testing

Z diode in relay (5-pin)
Perform test with ABS tester and protective adapter according to test step 12.

Z diode in relay (7 and 9-pin)
Perform test with approved multimeter as follows:

1. Switch multimeter to diode testing range.

2. Connect removed relay to multimeter **observing polarity;** multimeter connection + to terminal 31 and connection – to terminal 30. Use electrical connection set 201 589 00 99 00.

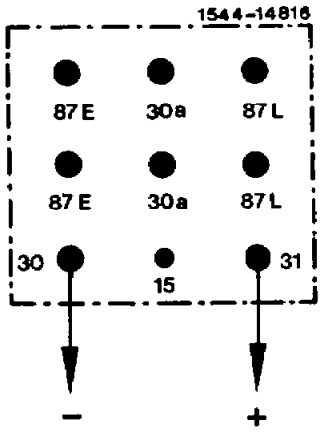

Specification 0.4 to 1.5 V

3. If specified value is not reached, check 10 A flat plug-in fuse and replace overvoltage protection relay.

Special tools

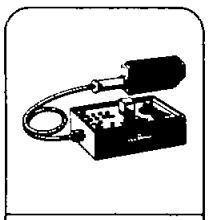
126 589 09 21 00
42

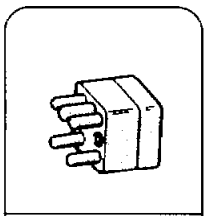
126 589 15 63 00
42

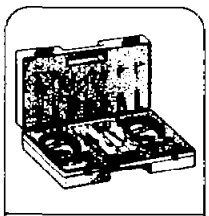
201 589 00 99 00
15 54

Commercially available test equipment

Digital multimeter	e.g.	Sun company, DMM-5 Hermann company, Avometer 2003

C. Repair Instructions

Only engine main wiring harnesses with 7-pin connector for the overvoltage protection relay are available for replacement.

After installation of an engine main wiring harness with 7-pin connector for overvoltage protection in a vehicle with 5-pin overvoltage protection, it is also necessary to replace the overvoltage protection and bracket for the control units.

On vehicles with ABS plug the lead for the power supply for the ABS control unit into the separate 3-pin connector into socket 7 on the connector for overvoltage protection. Replace the terminal block on the removed bracket for the control units with terminal block (8) and fasten with cable strap.

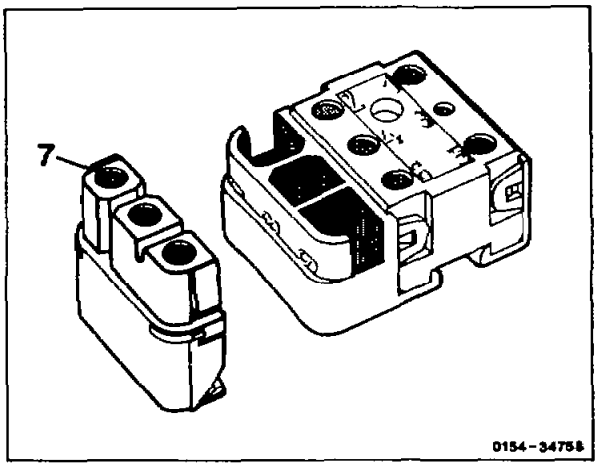

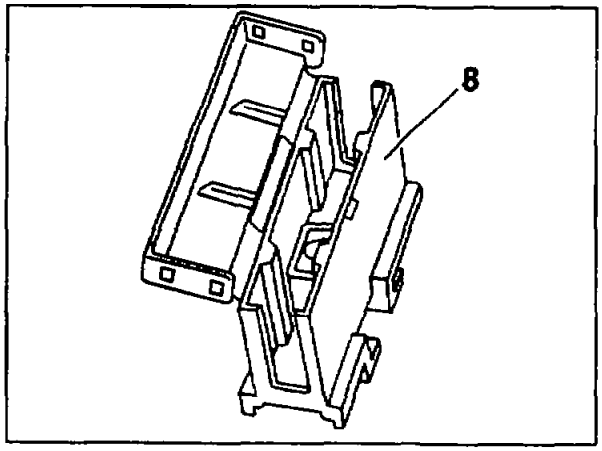

Parts

Designation		Part no.
Overvoltage protection relay, 7-pin	Optionally	201 540 32 45 201 540 38 45
Bracket for control unit		124 545 43 40
Terminal block		000 540 08 69
Cable strap		001 997 41 90

Available from: plant 50 (PEW Sindelfingen)

54–0246 Removing and installing odometer Ⓢ (bis 03/93) fehlt

Operation no. of operation texts and work units or standard texts and flat rates:

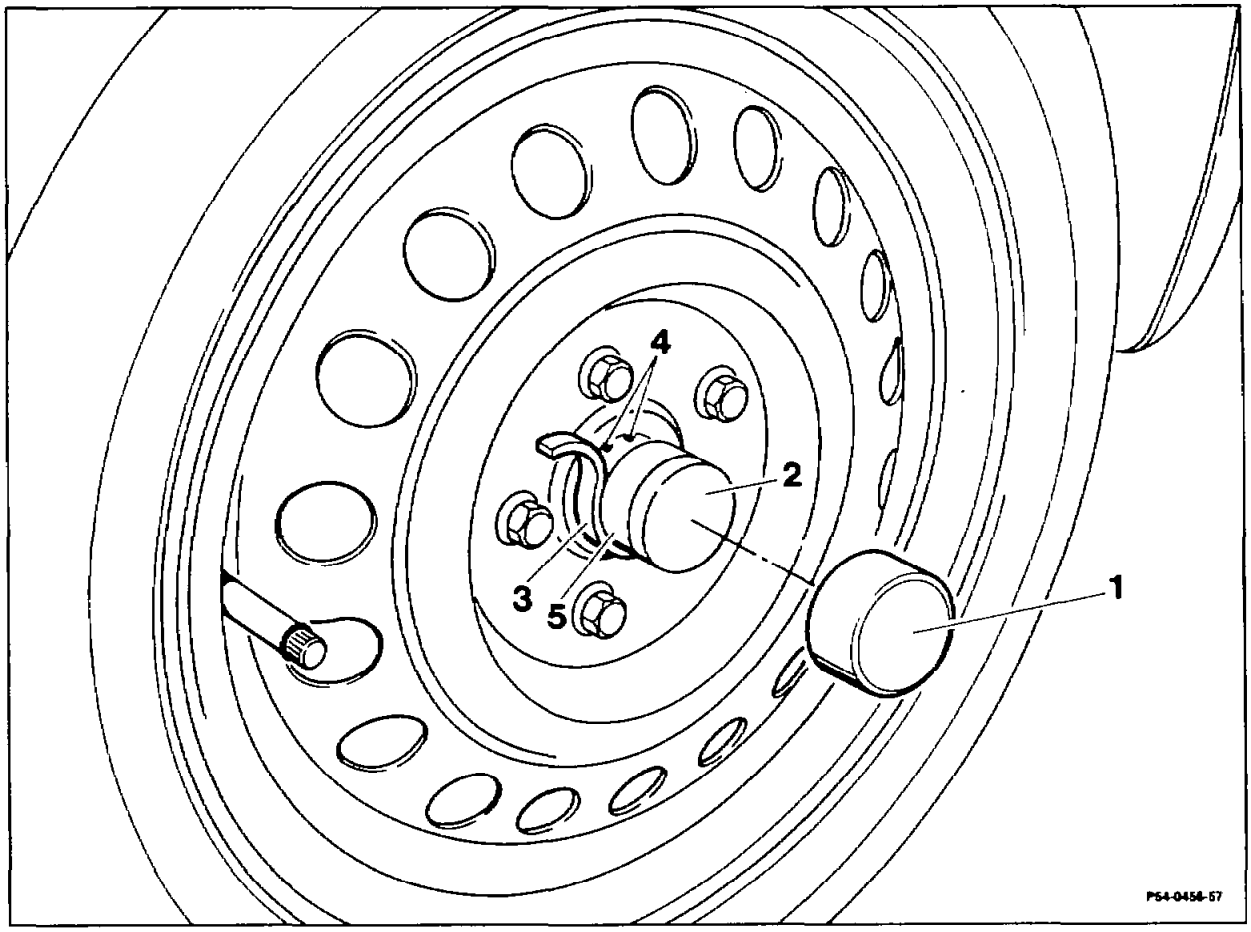

Protective cap (1) and cover (2)	take off (steps 1–2).
	Note The reading of the distance can be taken using the socket wrench in the protective cap. The socket wrench is fitted in the glovebox with effect from 05/89.
Lead strap (3)	cut open and pull off with pliers (step 3).
Welding points (4)	flatten off with a file and drill open approx. 6 mm deep with a 3 mm dia. drill (steps 4–5).
Odometer (5)	turn to right with insertion tool until the welding points shear off (step 6).

Holder for odometer	remove (step 7).
New holder	insert, tighten twelve-sided hexagon socket screw with torque wrench 000 589 10 99 01, 20 ± 5 Nm (step 8).
Odometer (5)	install, 20 ± 5 Nm. Secure with 6 welding points (steps 9–10).
Lead strap (3)	attach and stamp.
Cover (2) and protective cap (1)	fit on.

Note
The odometer is fitted for tax calculation purposes on vehicles with diesel engines.

Special tool

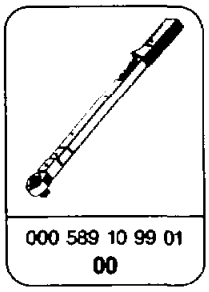

000 589 10 99 01
00

Note
An odometer is fitted to the rear right wheel hub of vehicles with diesel engines in place of the stamp counter.

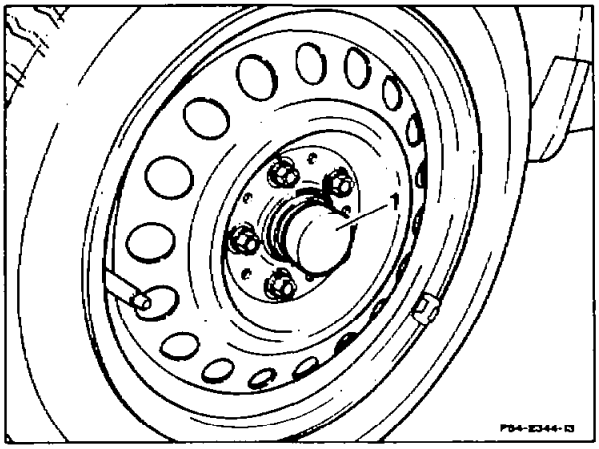

1 To take the reading of the distance travelled, remove the protective cap in the cover (2).

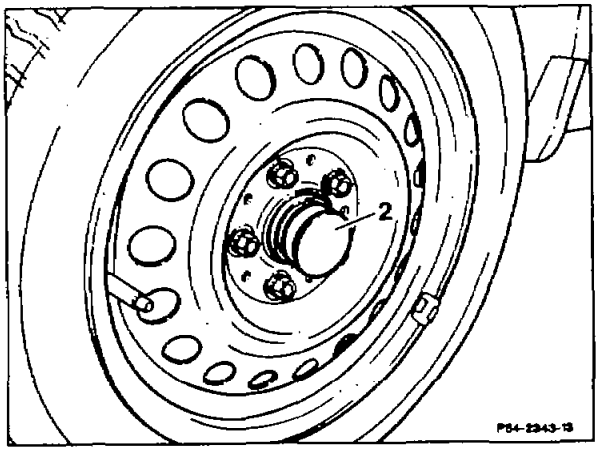

2 The reading of the distance can be taken using the wrench in the protective cap.

Note
The wrench is installed in the glovebox with effect from 05/89.

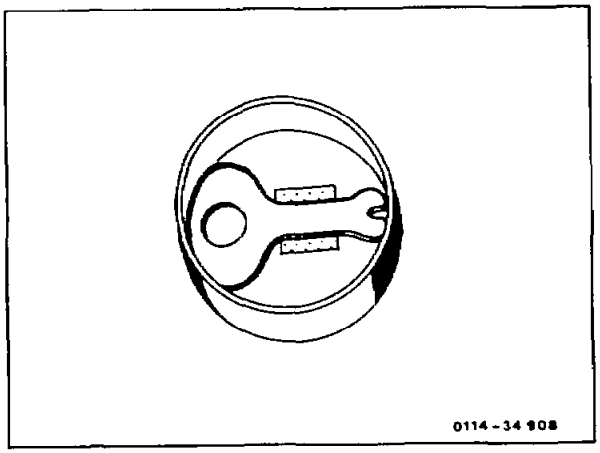

3 Cut open lead strap, e. g. with a screwdriver. Pull lead strap off with pliers.

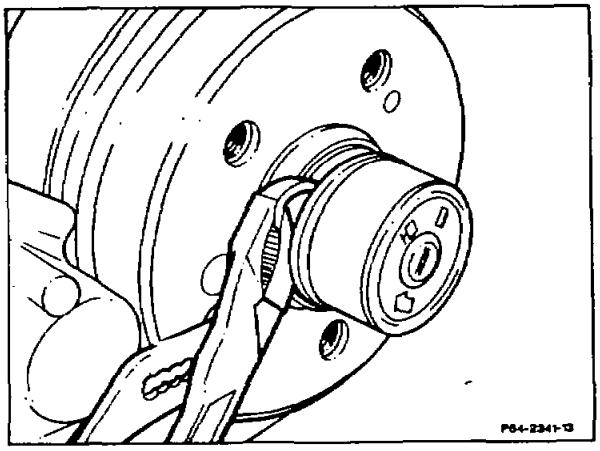

4 Flatten the outer edge with a file or milling cutter in order to drill open the 6 welding points.

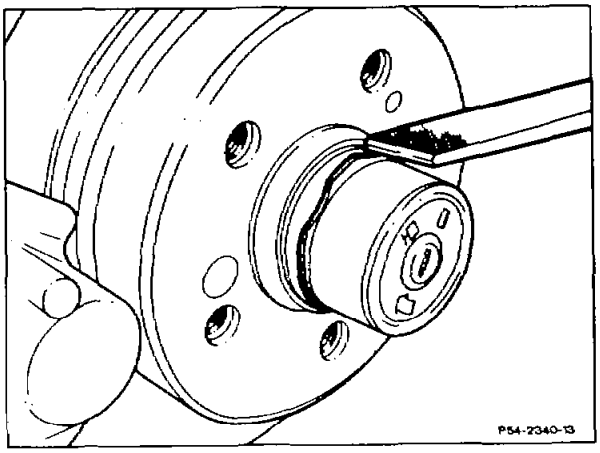

5 Drill open the 6 welding points approx. 6 mm deep with a 3 mm dia. drill.

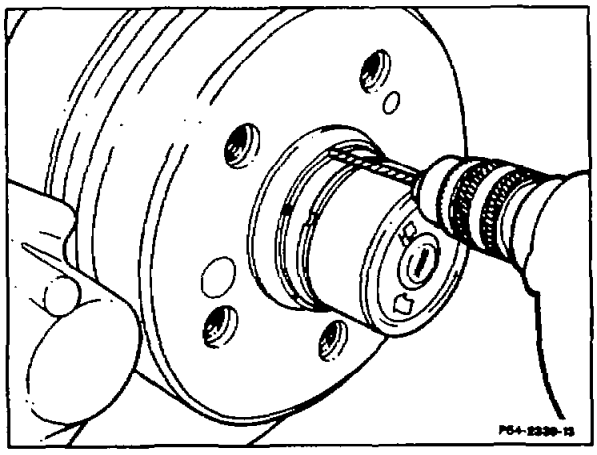

6 Turn odometer to the right with insertion tool until the welding points shear off.

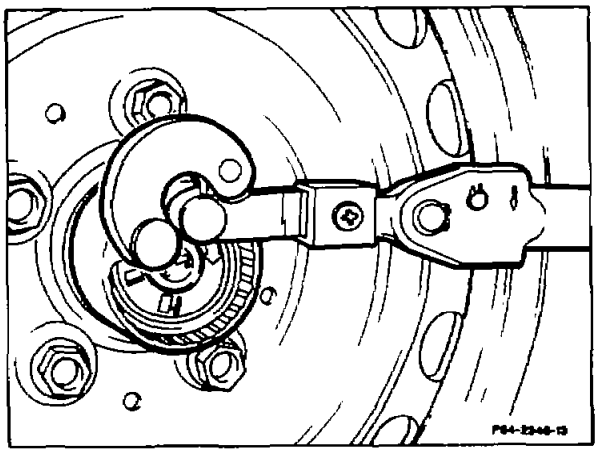

7 Remove holder for odometer. To do this, slacken twelve-sided socket screw and take out holder.

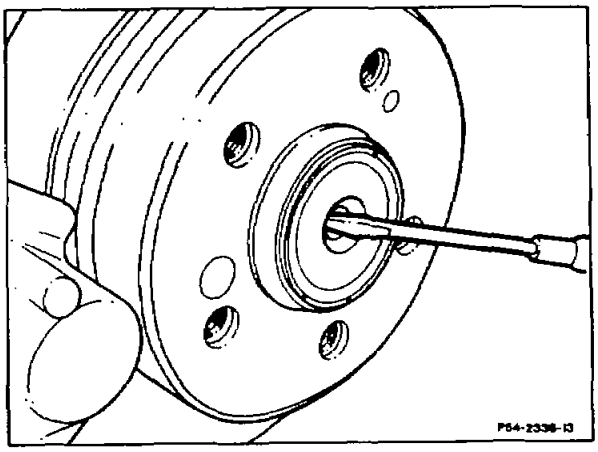

8 Insert new holder and tighten twelve-sided socket screw to 20 ± 5 Nm.

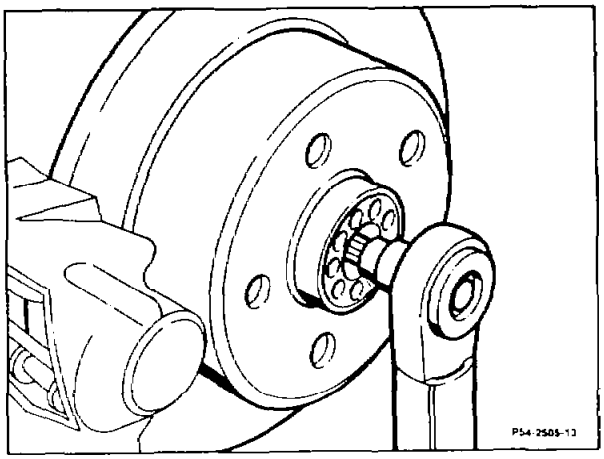

9 Tighten odometer to 20 ± 5 Nm with fitting tool.

10 Make 6 welding points for securing the odometer.

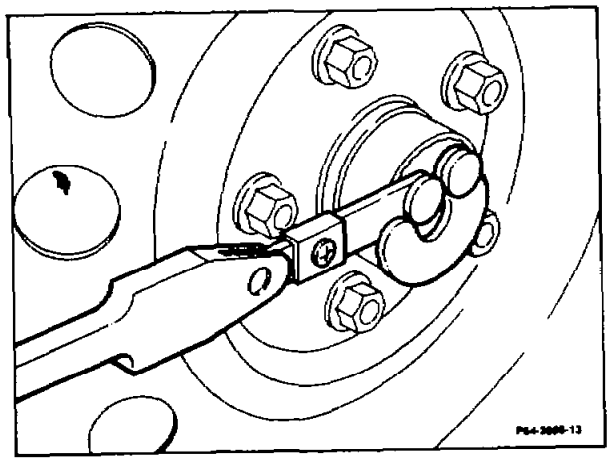

11 Fit on lead strap and stamp.

12 Fit on cover and protective cap.

54–0248 Hall sensor, road speed signal with mechanical/electronic speedometer

Preceding work:
Instrument cluster removed (54–6015).

Operation no. of operation texts and work units or standard texts and flat rates:

A. Removal, Installation

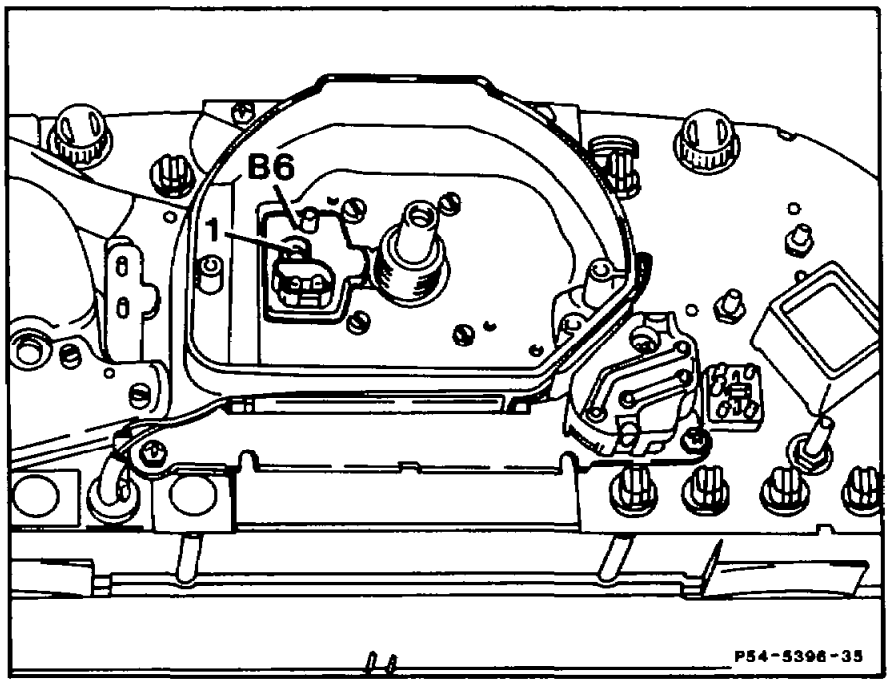

Securing screw (1)	remove, insert.
Hall sensor (B6)	take off, insert.

Note
If multiple use is made of the road speed signal, a multiple pin connection/Hall sensor X53/5 is installed.

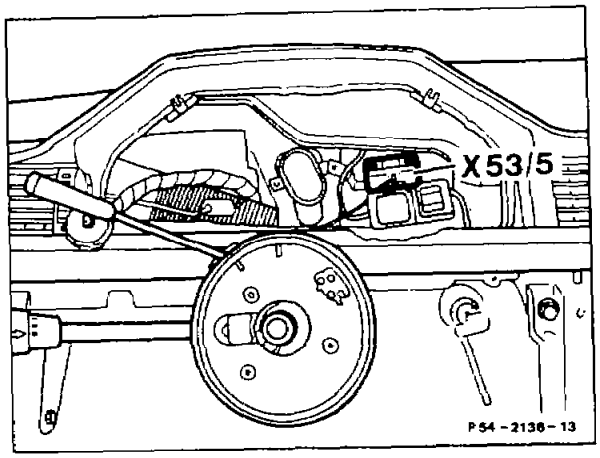

X53/5 Multiple pin connection/Hall sensor

B. Block diagram of road speed signal with mechanical speedometer

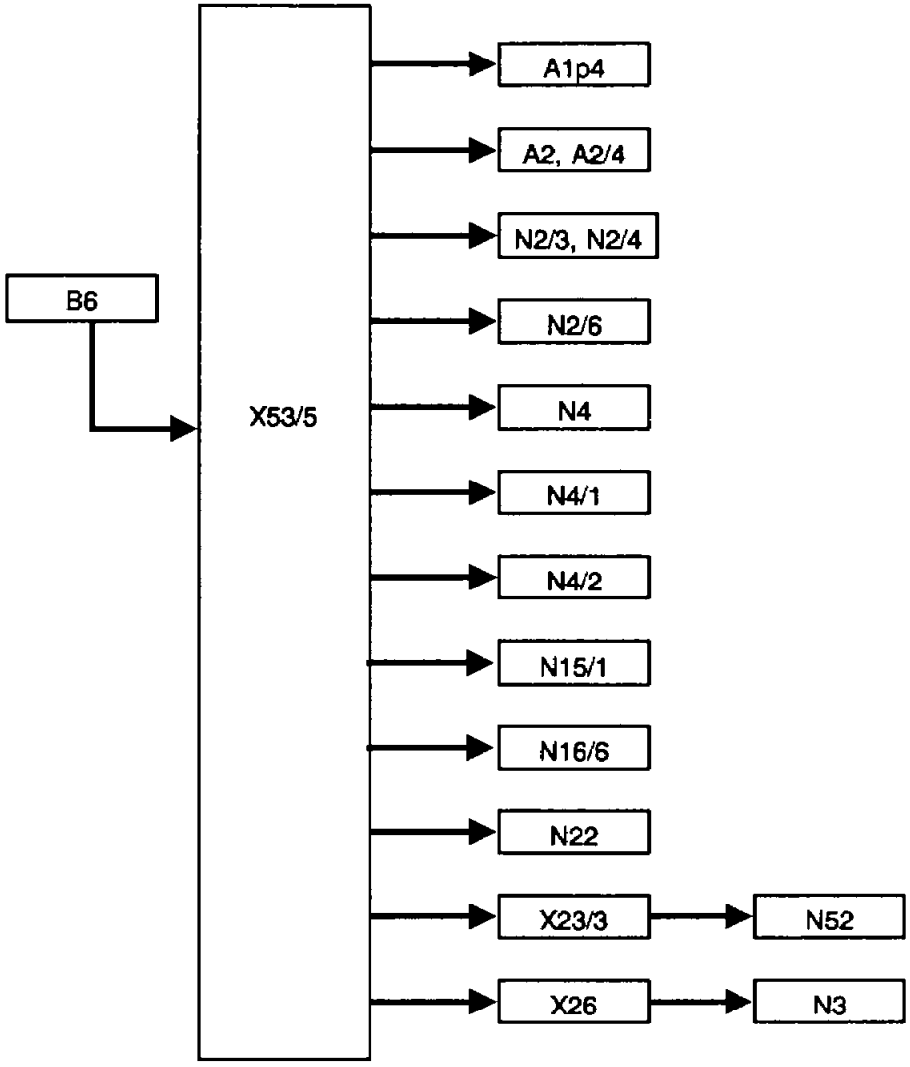

A1p4	Outside temperature indicator
A2	Radio
A2/4	Radio control unit
B6	Hall-effect speed sensor
N2/3	Seat belt warning control unit (SA)
N2/4	Seat belt warning control unit (SA)
N2/6	Parking brake warning module
N3	KE control unit
N4	Tempomat cruise control (TPM) amplifier
N4/1	Electronic accelerator pedal (EFP)/Tempomat cruise control (TPM)/idle speed control (LLR) control unit
N4/2	Tempomat/cruise control (TPM) control unit with reference resistor
N15/1	5-speed automatic transmission control unit
N16/6	Fuel pump relay with kick-down and compressor cut-out
N22	Automatic climate control (KLA) pushbutton control unit
N52	Soft top control unit
X23/3	Plug connection, soft top/interior (14-pin)
X26	Plug connection, interior/engine
X53/5	Multi-point plug connection, Hall-effect sensor/road speed signal

C. Block diagram of road speed signal with electronic speedometer

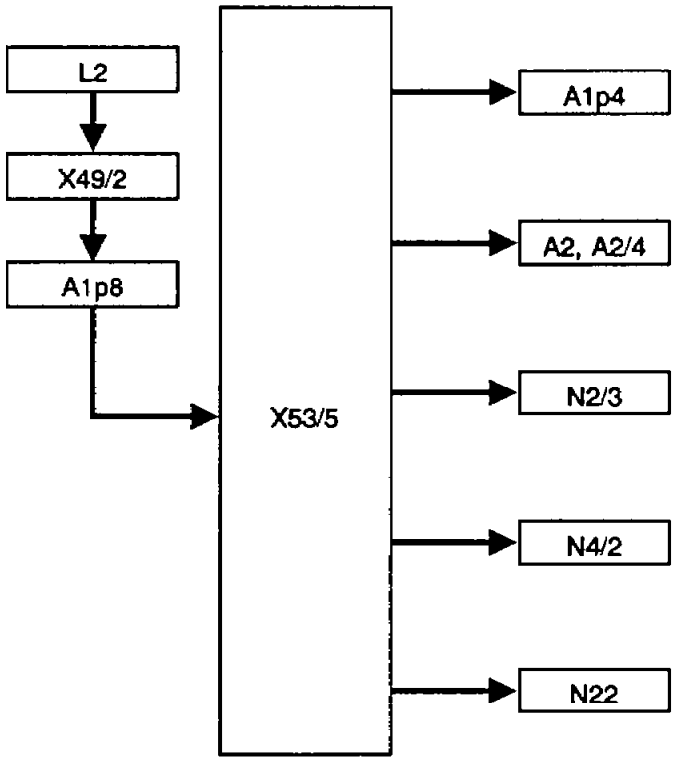

A1p4	Outside temperature indicator
A1p8	Electronic speedometer
A2	Radio
A2/4	Radio control part
L2	Road speed inductive sensor, transmission
N2/3	Seat belt and road speed warning control unit (SA)
N2/4	Seat belt and road speed warning control unit (SA)
N4/2	Tempomat cruise control (TPM) control unit with reference resistor
N22	Automatic climate control (KLA) pushbutton control unit
X49/2	Plug connection, starter lockout and reversing light switch
X53/5	Multi-point plug connection, Hall-effect sensor/road speed signal

Operation no. of operation texts and work units or standard texts and flat rates:

A. Testing sensor with multimeter

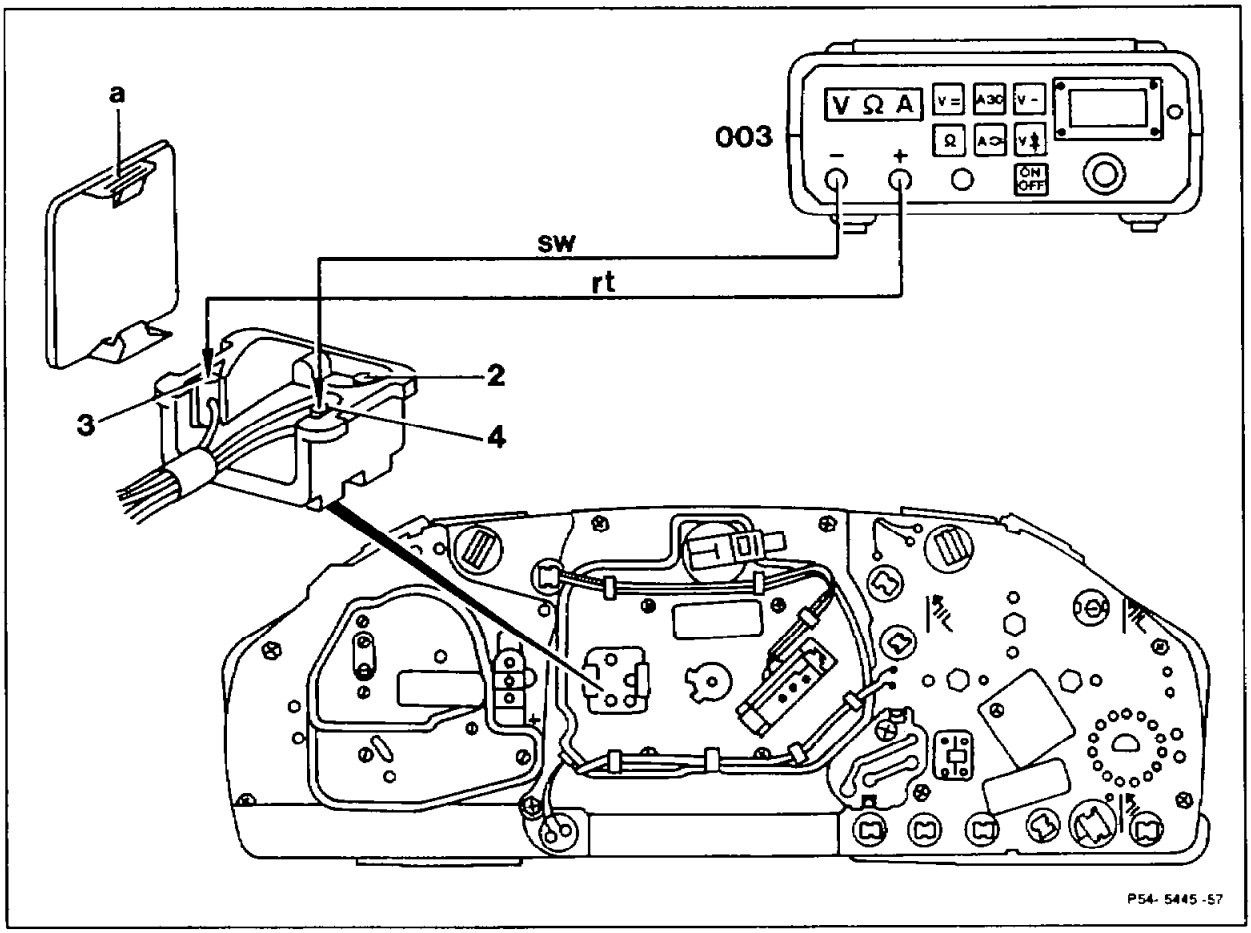

Static test

Instrument cluster	remove, reinstall (54–6015).
Cover (a)	remove on connector housing.
Voltage	check with multimeter (003) between socket 4 (brown wire, ground) and socket 2 (black/violet wire with red dots, terminal 15). For this purpose turn key in ignition/starter switch to position 2.

Specified value: Battery voltage
Use electrical connection set 201 589 00 99 00 for testing.

Resistance	measure with multimeter (003) between socket 4 (brown wire, ground) and socket 3 (white wire, sensor lead). **Specified value:** 2 k Ω ± 200 Ω Use electrical connection set 201 589 00 99 00 for testing.

Dynamic test with multimeter

Multimeter (003)	connect (see figure): *Red test wire to socket 3 (white wire, sensor wire).* Black test wire to socket 4 (brown wire, ground) Use electrical connection set 201 589 00 99 00 for testing.
Multimeter (003)	switch on (range: volt ~)
Vehicle	drive on dynamometer or on road. The voltage should increase continuously at increasing speed up to approx. 40 km/h > 1 V.
Cover (a) on connector housing	close.

B. Testing sensor and speedometer with frequency generator

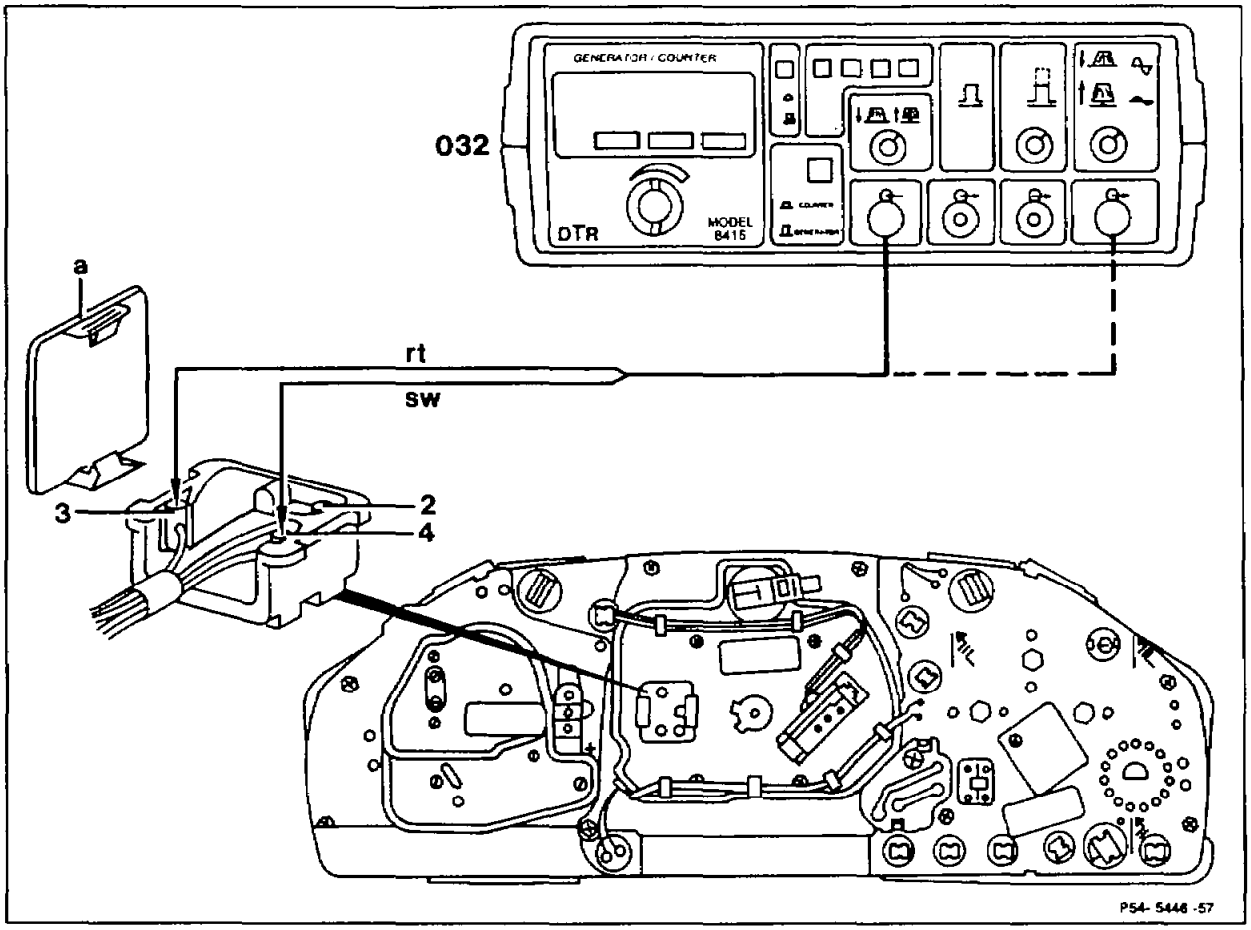

Static test

Instrument cluster ..... remove, reinstall (54–6015).

Cover (a) ..... open on connector housing.

Voltage ..... check with multimeter (003) between socket 4 (brown wire, ground) and socket 2 (black/violet wire with red dots, terminal 15). For this purpose turn key in ignition/starter switch to position 2.

Specified value: Battery voltage
Use electrical connection set 201 589 00 99 00 for testing.

Resistance ..... measure with multimeter (003) between socket 4 (brown wire, ground) and socket 3 (white wire, sensor wire).

Specified value: 2 k Ω ± 200 Ω.
Use electrical connection set 201 589 00 99 00 for testing.

Dynamic test with frequency generator

Frequency generator (032)	connect (see figure): Red test wire to socket 3 (white wire, sensor wire). Black test wire to socket 4 (brown wire, ground) Use electrical connection set 201 589 00 99 00 for testing.
Sensor	test (frequency generator in counter mode).
Vehicle	drive on dynamometer or on road. The frequency should increase continuously at increasing speed.
Key in ignition/starter switch	turn to position 2 (battery voltage).
Speedometer	test (frequency generator in alternator mode, sine wave function). The speed reading should increase at increasing frequency.

Special tool

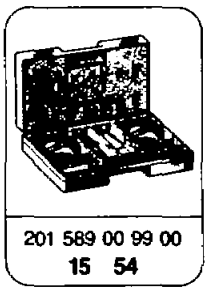

201 589 00 99 00
15 54

Commercially available testers

Multimeter	e. g.	Sun DMM–5 or Avometer 2003
Function generator	e. g.	Dynatrade, DTR 8416

54–0254 Testing electric oil pressure gauge

Operation no. of operation texts and work units or standard texts and flat rates:

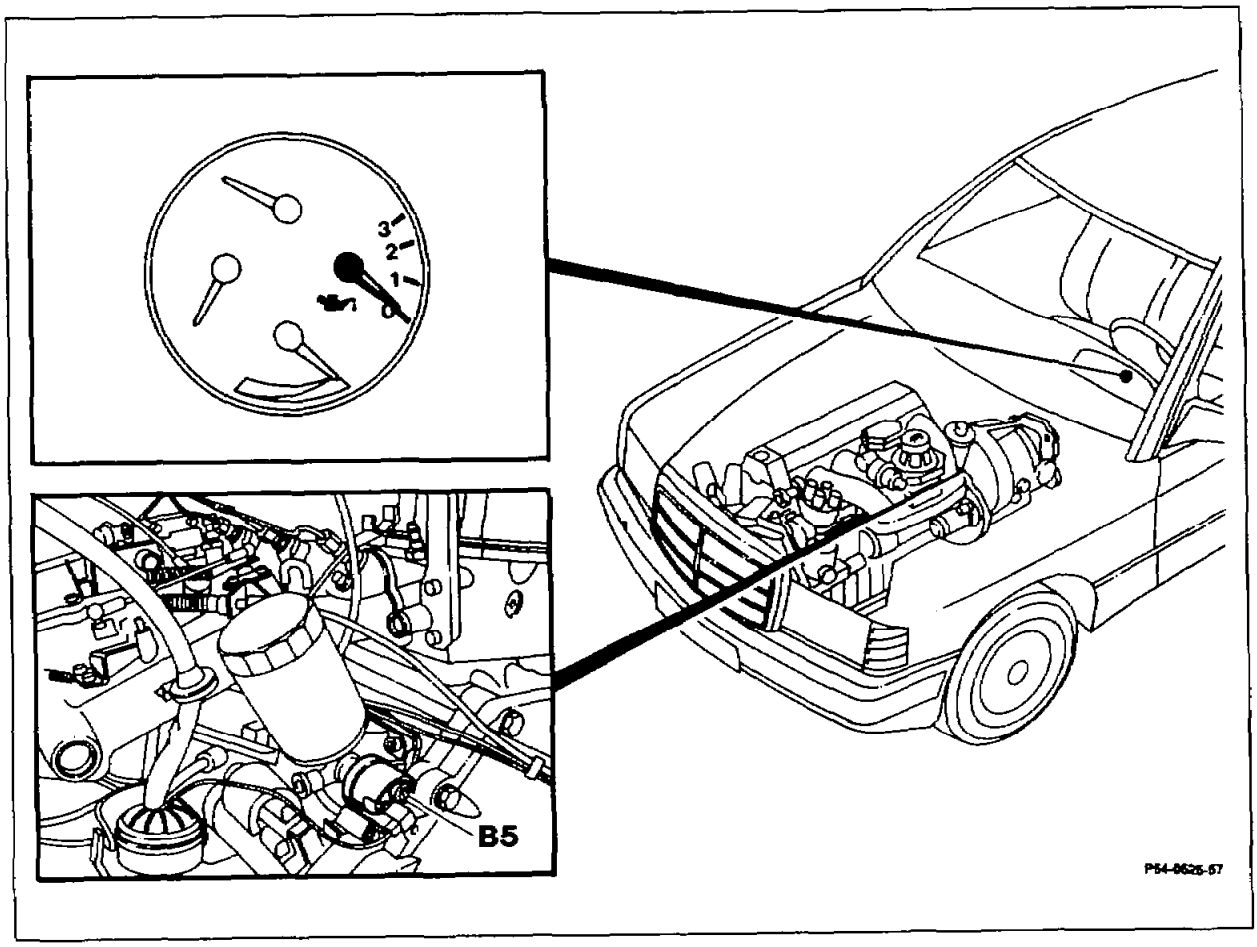

B5 Oil pressure gauge sensor

Key in steering lock	turn to position 2 (battery voltage).
Electrical connection	unplug from oil pressure gauge sensor (B5). Specified reading: 3 bar.
If specified reading is not achieved	test cable from oil pressure gauge sensor (B5) to instrument for short to ground.
Cable in order	replace instrument.
When engine switched off, oil pressure gauge rises	connect cable from oil pressure gauge sensor (B5) to ground. If reading is 0 bar, replace oil pressure gauge sensor (B5).

Reading remains at 3 bar . . . . . cable has open circuit.

Note
The oil pressure gauge is controlled electrically.

An oil pressure gauge sensor (B5) installed in the oil filter controls the gauge in the instrument cluster.

Positive exists continuously at the oil pressure gauge in the instrument cluster when the ignition is switched on. Negative is applied in the oil pressure gauge through the sensor (B5). As the pressure rises, the ohmic resistance of the oil pressure gauge sensor (B5) increases and the reading of the gauge alters.

Test data

Pressure (bar)	Resistance (ohms)
0	approx. 10
1	approx. 69
2	approx. 129
3	approx. 184

Note
The resistance of the oil pressure gauge sensor (B5) depends on the pressure in the system.

Special tool

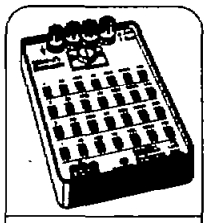

124 589 09 63 00
15 54

54–0255 Testing gauge for economic driving (ECONOMY) (up to 06/90)

Operation no. of operation texts and work units or standard texts and flat rates:

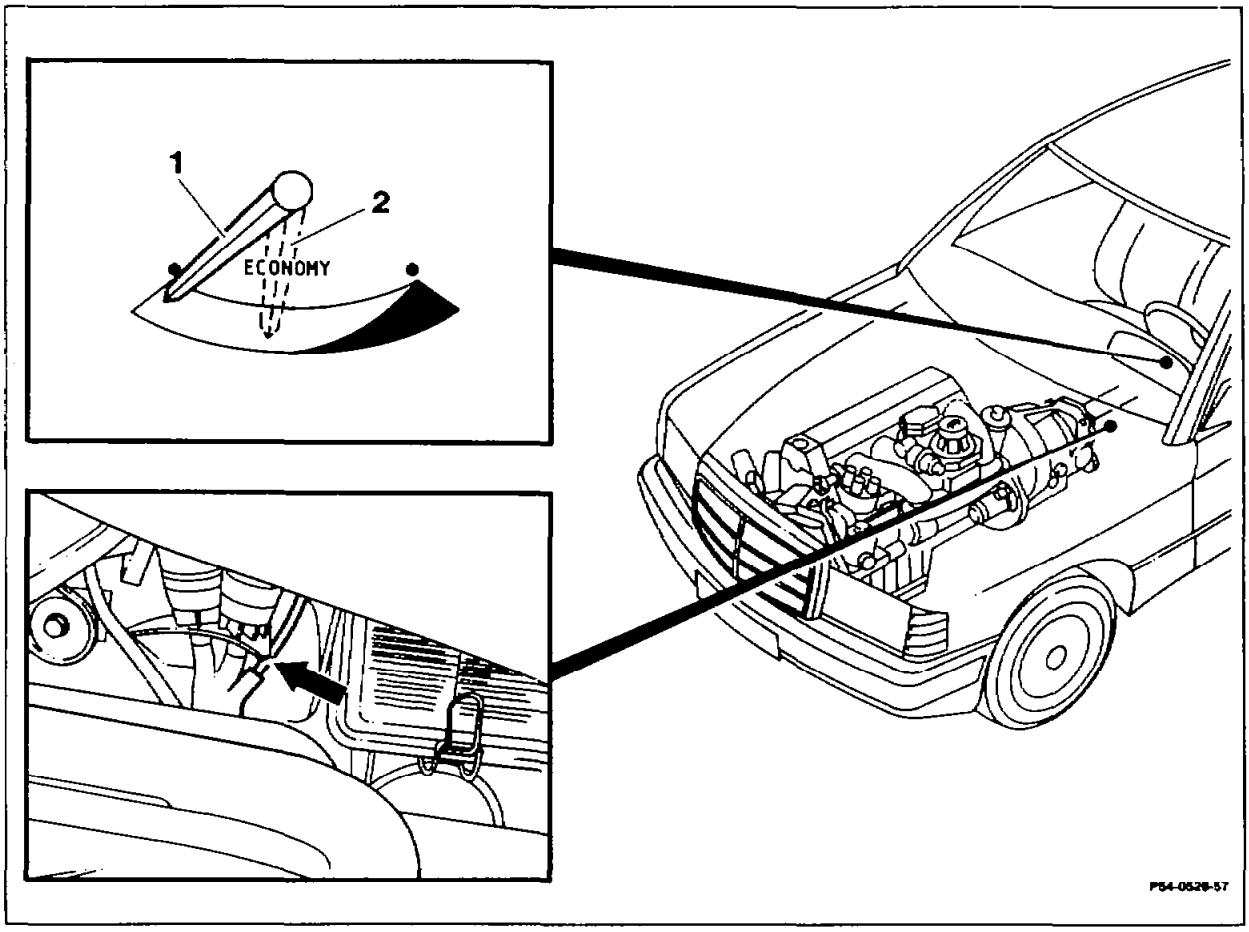

Vacuum line at distributor (arrow)	detach.
Tester 201 589 13 21 00	connect to vacuum line to intake manifold.
Engine	start. Specification at idling speed: –0.4 to –0.6 bar. If the specification is not achieved, the vacuum line is fouled or leaking; clean or replace as necessary.
Tester 201 589 13 21 00	connect between intake manifold and gauge.
Pointer in gauge	moves to the left (1), specification at left stop: ≥ –0.585 bar.

Idling speed	increase until pointer of gauge is at start of red field (2). Specification: approx. 0.4 bar.
Specified value or reading of gauge not reached	leak in vacuum system of headlamp range control and/or air conditioner.
	Note If a faulty vacuum unit at the transmission is found on vehicles with automatic transmission, *oil may also be present in the gauge and in the cable.* Clean cable and replace gauge.
Tester 201 589 13 21 00	disconnect.

Special tool

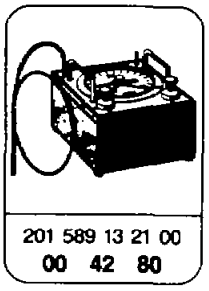

201 589 13 21 00
00 42 80

Function

The gauge is connected by a vacuum line to the intake manifold and indicates the momentary fuel consumption as a function of intake manifold vacuum.

At a high intake manifold vacuum the pointer is in the black field of the gauge (low fuel consumption); as intake manifold vacuum drops, the pointer moves into the red field. The momentary fuel consumption increases.

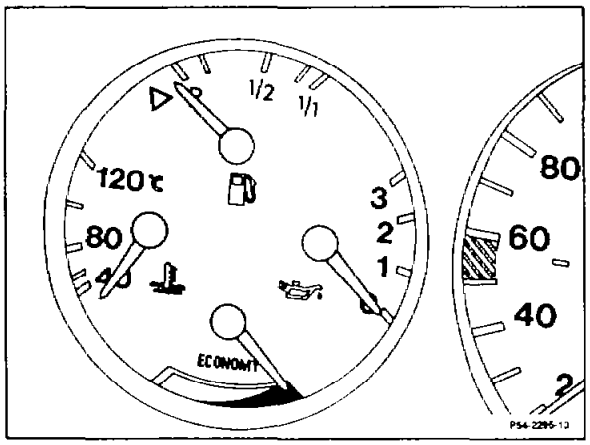

When the engine is not running, the pointer is in the red field against the right stop pin.

Note
The pointer only indicates a reading at a vacuum of ≥0.08 bar.

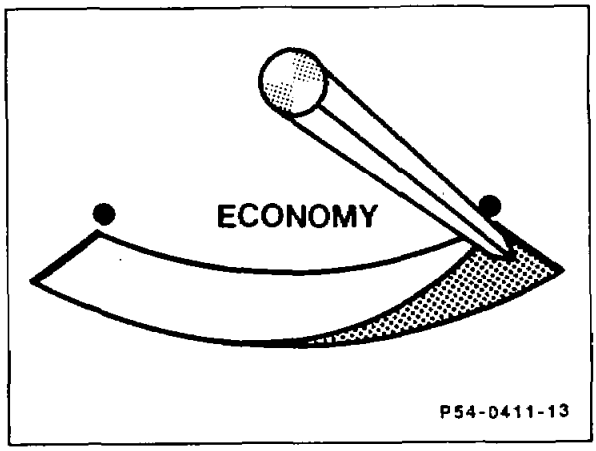

Note
If the pointer remains in the red field against the right stop, there is a leak in the vacuum line to the gauge (connection point, line) or the gauge is faulty.

Renew vacuum line and/or gauge.

If the gauge is very sluggish, the cause may be oil in the vacuum line and/or in the instrument. Oil can get into the vacuum system as a result of a faulty membrane in the vacuum unit at the automatic transmission, and this then results in failure of the gauge.

54–0256 Function of fuel gauge sensor

Operation no. of operation texts and work units or standard texts and flat rates:

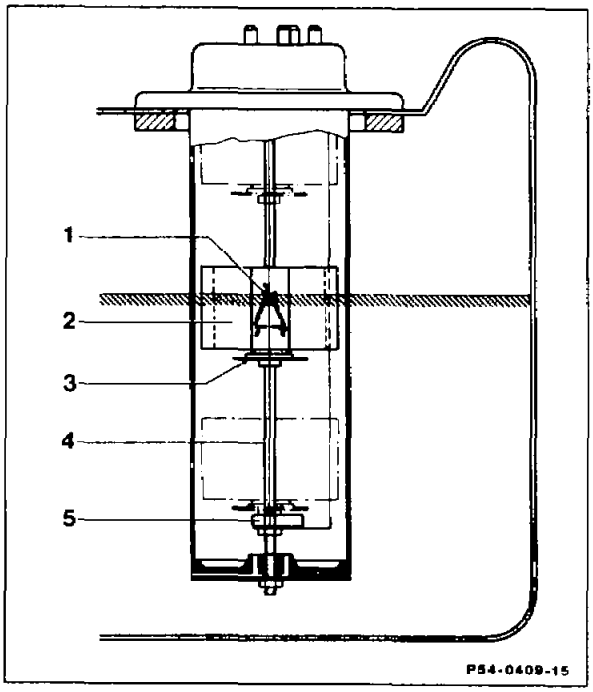

Fuel gauge sensor

1	Wiper contact
2	Float
3	Contact plate
4	Guide and contact rod
5	Reserve warning contact

Electrical function . . . . . .

As the fuel level drops, the resistance is increased by the wiper contact (1) at the float (2) of the sensor. The current drops and the needle in the gauge moves back.

As the fuel level drops further, the reserve warning contact (5) in the fuel gauge sensor is closed and this switches ground to the reserve warning lamp.

Wiring diagram of fuel gauge

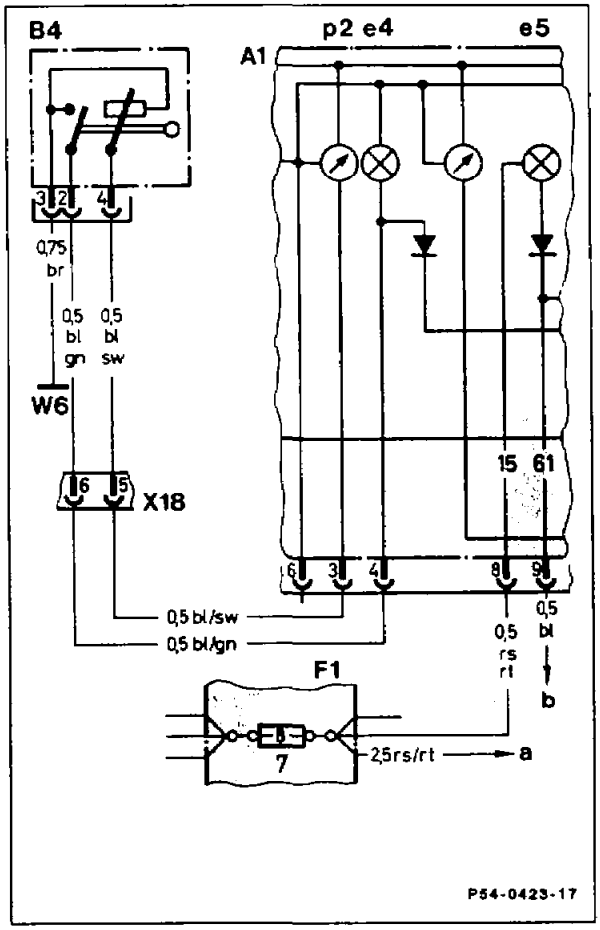

A1	Instrument cluster
A1e4	Fuel reserve warning lamp
A1e5	Charge indicator lamp
A1p2	Fuel gauge
B4	Fuel gauge sensor
F1	Fuse and relay box
W6	Ground, trunk, left wheelhouse
X18	Plug connection, interior/taillamp harness (8-pin)
a	To ignition starter switch S2/1 terminal 15
b	To lamp failure monitoring unit N7 terminal 61

54–0257 Testing fuel gauge

Preceding work:
Partition panel between fuel tank and trunk removed (68–700).
Fuel gauge sensor removed (47–0120).

Operation no. of operation texts and work units or standard texts and flat rates:

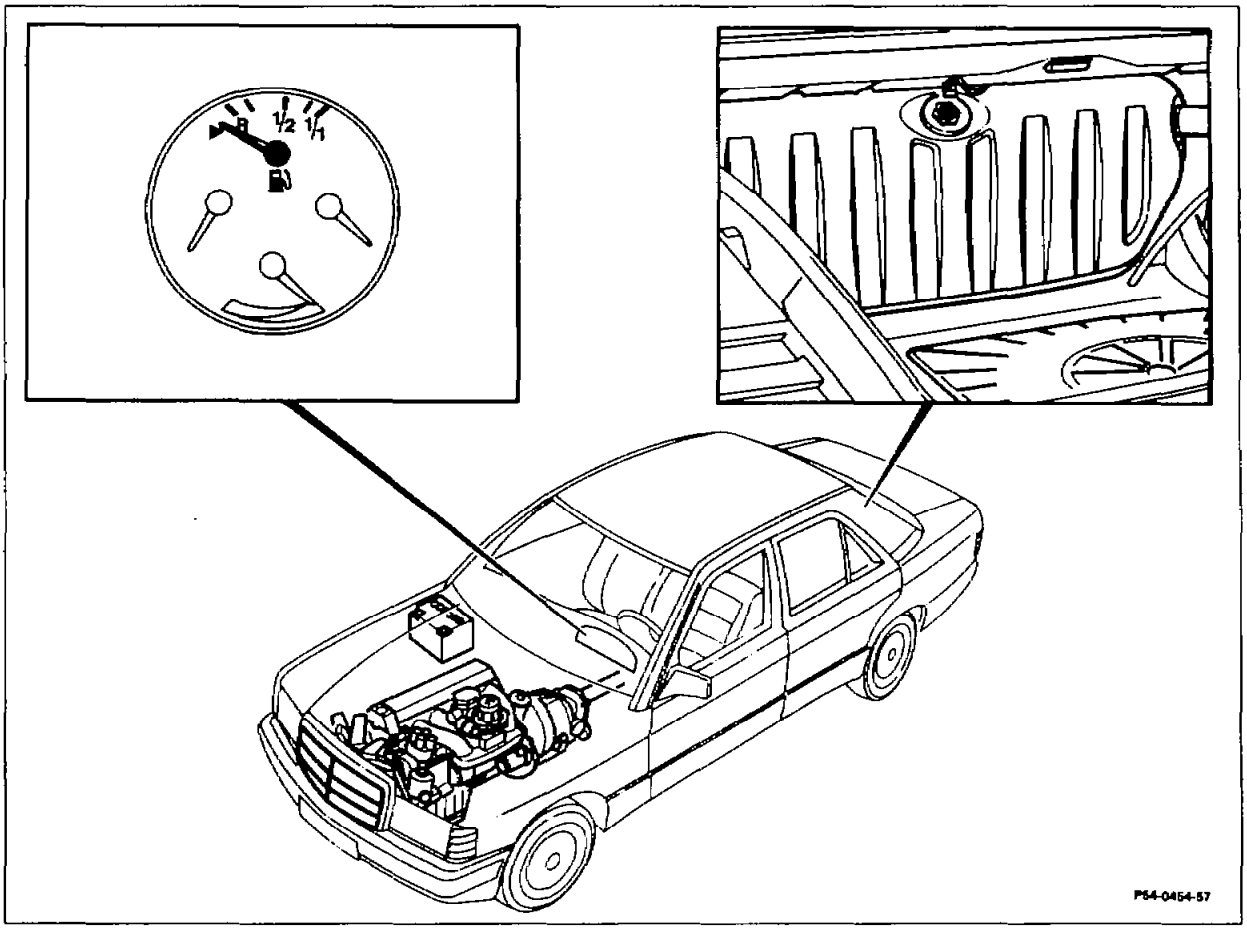

Testing fuel gauge sensor

Multimeter to terminal G and terminal 31 . . . . . connect and measure resistance.

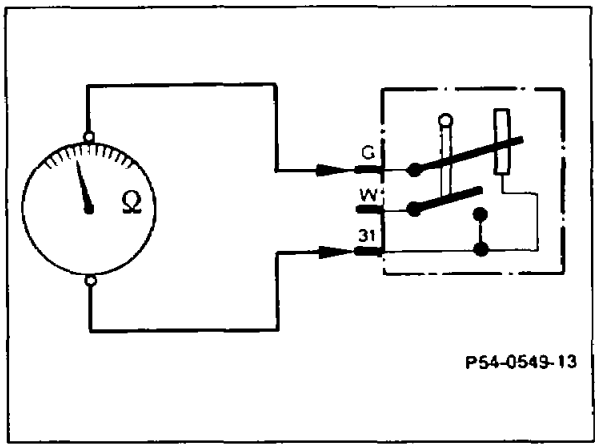

	Sedan 70 or 90 liter fuel tank	Model 124.034 (except exhaust countries) and model 124.036, 90 liter fuel tank	T-model	Convertible
In installed position Float down	85.6 ± 2.5 Ω	80.4 ± 0.6 Ω	77.8 ± 2.3 Ω	77.8 ± 0.8 Ω
Sensor turned 180° Float up	1.9 ± 0.7 Ω	1.9 ± 0.6 Ω	3.2 ± 0.7 Ω	3.2 ± 0.6 Ω

Testing reserve warning contact

Multimeter to terminal W and terminal 31 . . . . . connect and measure resistance.

Specification approx. 0 Ω in installed position.
Specification ∞ Ω turned 180°.

Note

The reserve warning lamp lights up when the ignition is switched on (check function). As soon as the engine is running, it goes out provided the fuel tank contains more than the reserve quantity.

The reserve warning lamp lights up with a weak light for the check function, and with a brighter light for reserve warning.

Testing wiring harness

Resistance at contact 3 connector of fuel gauge sensor and vehicle ground . . . . . measure.

Specification approx. 0 Ω, if test value is ∞ Ω *ground cable has open circuit.*

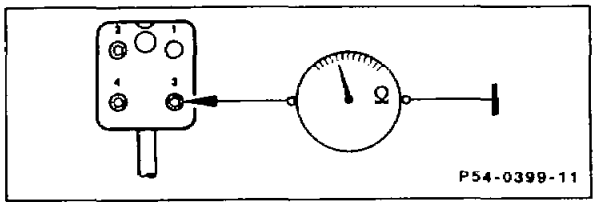

Fuel gauge sensor . . . . . install (47–0120).

Measure resistance at terminal G and terminal 31 and note. The reading depends on the contents of the fuel tank.

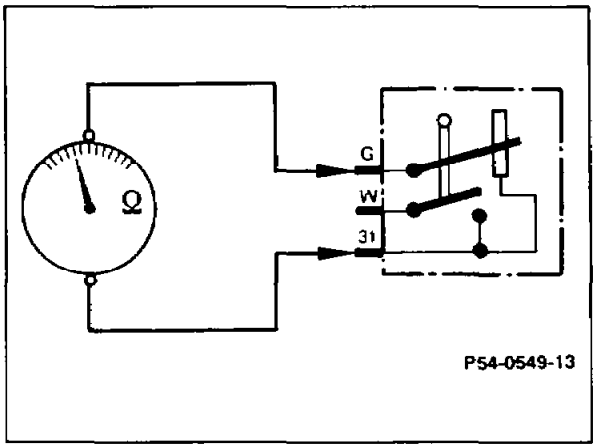

Connector at fuel gauge sensor . . . . . plug in.
Instrument cluster . . . . . remove (54–6015).
Multimeter . . . . . connect to contacts 1 and 3 and measure resistance.

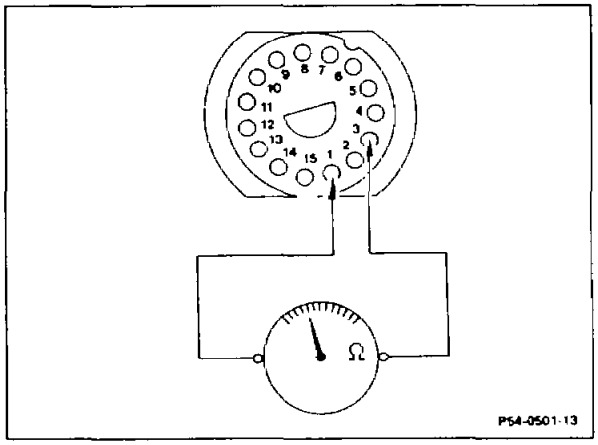

Specification	is the reading measured and noted at terminal G and terminal 31 of fuel gauge sensor; minor variation possible due to line length.
Measured value higher or ∞ Ω	poor contact at wiring harness connectors (at instrument cluster, at main wiring harness, taillamp harness or at fuel gauge sensor), cold solder point or cable has open circuit.
No fault detected during tests	replace gauge.
Instrument cluster	install (54–6015).

Test data fuel gauge sensor

	Sedan	T-model	Mod. 124.036/ 034 [1])	Convertible
Resistance with float up	3.3 ± 0.7 Ω	8.6 ± 0.7 Ω	4.0 ± 0.6 Ω	8.6 ± 0.7 Ω
Resistance with float down	85.6 ± 2.5 Ω	77.8 ± 2.3 Ω	80.4 ± 0.6 Ω	77.8 ± 0.8 Ω

[1]) Model 124.034 with 90 liter fuel tank (except exhaust countries)

Commercially available tester

Multimeter	e. g. Sun DMM–5

54–0264 Testing windscreen washer level indicator

Operation no. of operation texts and work units or standard texts and flat rates:

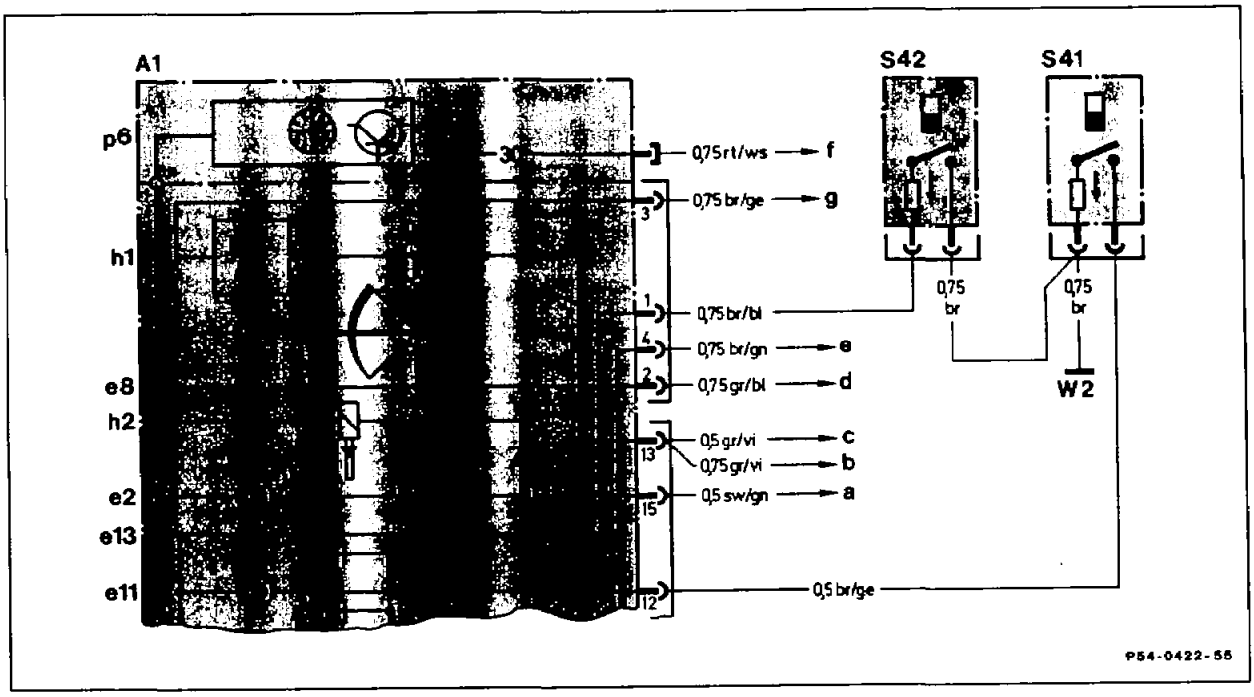

Wiring diagram of windscreen washer and coolant level indicator

A1	Instrument cluster	W2	Ground, front right (at headlamp unit)
A1e2	Right turnsignal indicator lamp	X27	Plug connection, starter wiring harness
A1e8	Instrument lighting	a	To plug connection, combination switch S4x1
A1e11	Coolant level indicator lamp	b	To cigar lighter with ashtray illumination, front R3
A1e13	Windscreen washer level indicator lamp	c	To lamp failure monitoring unit N7
A1h1	Warning buzzer	d	To terminal block X6 terminal 58d
A1h2	Audible turnsignal indicator	e	To plug connection X27 headlamp wiring harness
A1p6	Electronic clock	f	To fuse and relay box F1 terminal 30
A1r1	Instrument lighting rheostat	g	To warning buzzer contact, lighting
S41	Switch, coolant level indicator lamp		
S42	Switch, windscreen washer level indicator lamp		

Test data

Resistance at windscreen washer level indicator lamp switch with windscreen washer level	"max"		∞ Ω
	"min"	approx.	5 Ω
Battery voltage		approx.	12 V

Commercially available tool	
Multimeter	e. g. Sun, DMM–5

Note
The windscreen washer level indicator lights up when the ignition is switched on (check function). As soon as the engine is running, it goes out provided the windscreen washer level is above "min".

The indicator lamp lights up with a weak light for the check function and with a bright light if there is a fault.

The windscreen washer level indicator should be tested if any of the following complaints exist:

A. Indicator lamp lights up constantly when engine is running and the windscreen washer fluid at correct level.
B. Indicator lamp does not light up when ignition key in position "2".
C. Indicator lamp does not light up when engine running and windscreen washer level below "min".

A. Indicator lamp lights up constantly when engine is running and windscreen washer fluid is at correct level

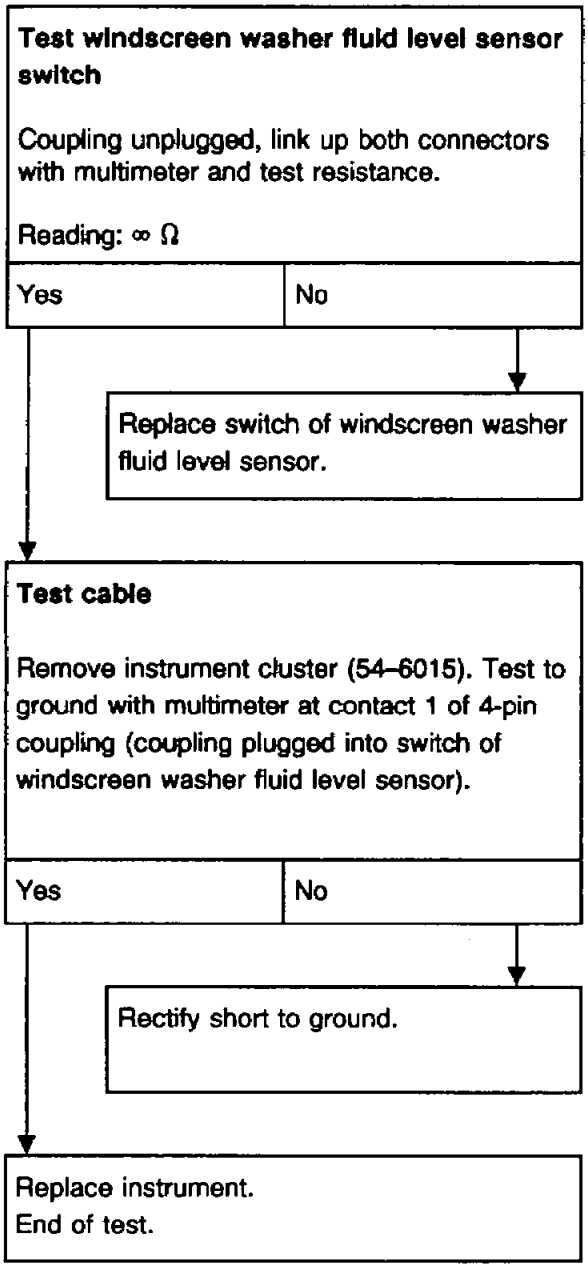

B. Indicator lamp does not light up when ignition key in position "2"

Check operation of bulb.

Yes	No

→ Replace bulb.

Remove instrument cluster (54–6015).
Measure voltage with multimeter at contacts 6 and 9 of the 15-pin coupling.

Reading: approx. 12 V

Yes	No

→ Rectify open circuit according to wiring diagram.

Replace instrument.
End of test.

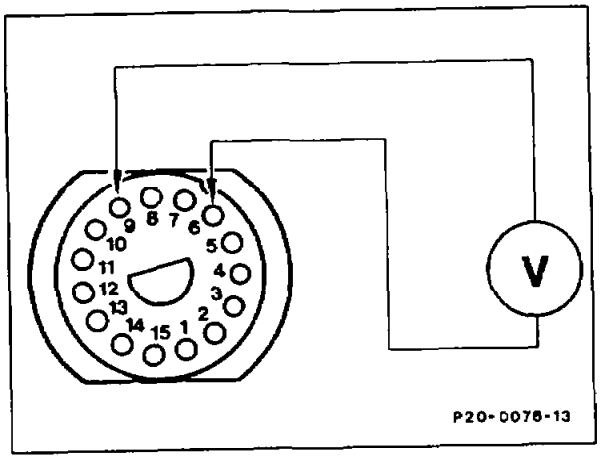

C. Indicator lamp does not light up when engine running and windscreen washer level below "min" (section "B" in order)

Test switch of windscreen washer fluid level sensor

Coupling unplugged, link up both connectors with multimeter and test resistance.

Reading: approx. 5 Ω

Yes	No

→ Replace switch of windscreen washer fluid level sensor.

Test cable

Connect multimeter to 2-pin coupling of switch of windscreen fluid level sensor (brown cable) and battery positive.

Reading: approx. 12 V

Yes	No

→ Test ground connection, correct.

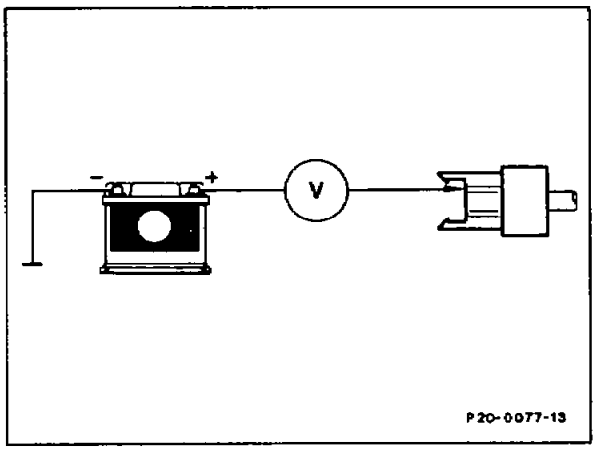

Bridge coupling of switch of windscreen fluid level sensor. Indicator lamp should light up when key in position "2".

Yes	No

→ Rectify open circuit according to wiring diagram.

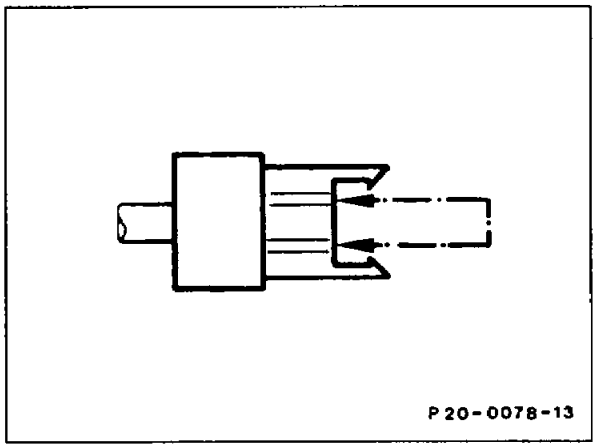

End of test.

54–0320 Removing and installing rear dome lamp and switch

Operation no. of operation texts and work units or standard texts and flat rates:

A. Station wagon

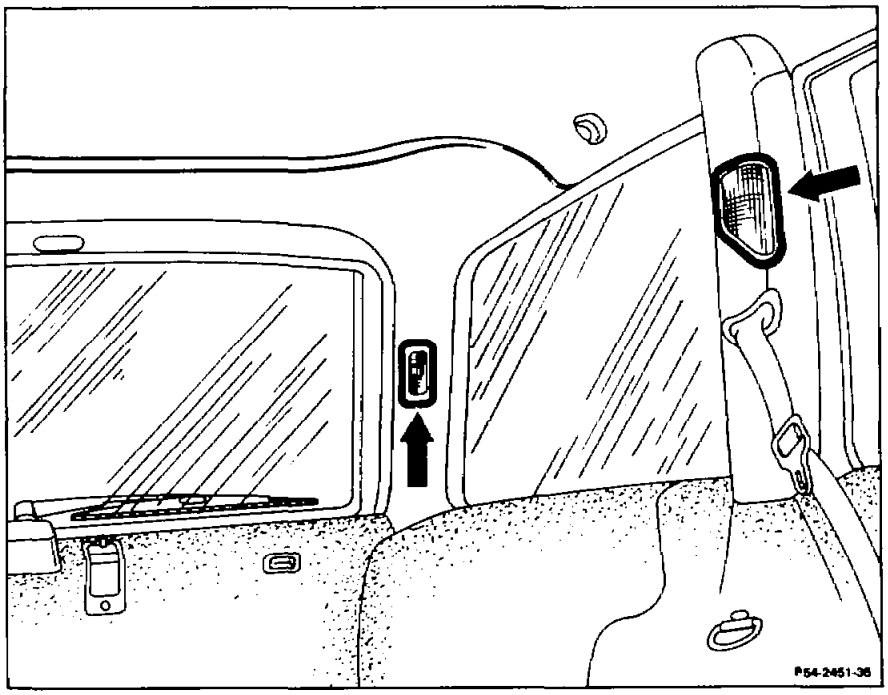

Dome lamp	unclip at the side marked with arrow, clip into place.
Electrical connections	unplug, plug in.
Tailgate contact switch	remove, install (step 1).
	Note The contact switch (A12s2) for the tailgate is integrated in the lock and can only be removed complete with the lock.
Switch in cover, top center console	remove, install (54–3190, step 2).

1 The contact switch (A12s2) for the tailgate is integrated in the lock and can only be removed complete with the lock.

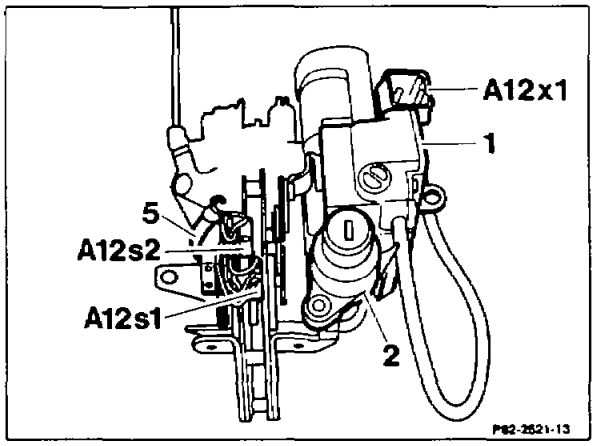

2 The four dome lamps can be switched on by the switch (3) which is located on the switch console.

Switch positions:
0 = Dome lamps switched off
I = Dome lamps constantly on
II = Dome lamp controlled by rear door contacts and tailgate contact

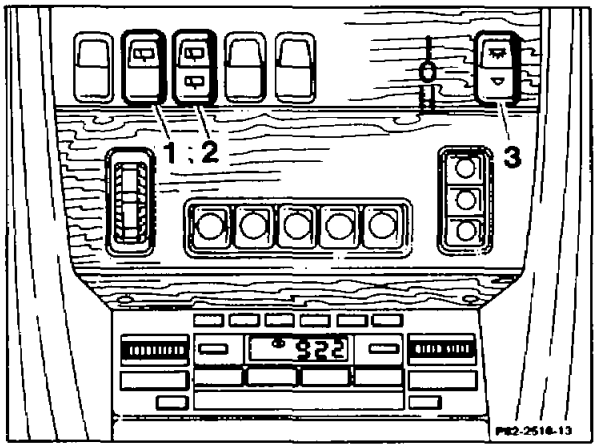

B. Sedan trunk lighting

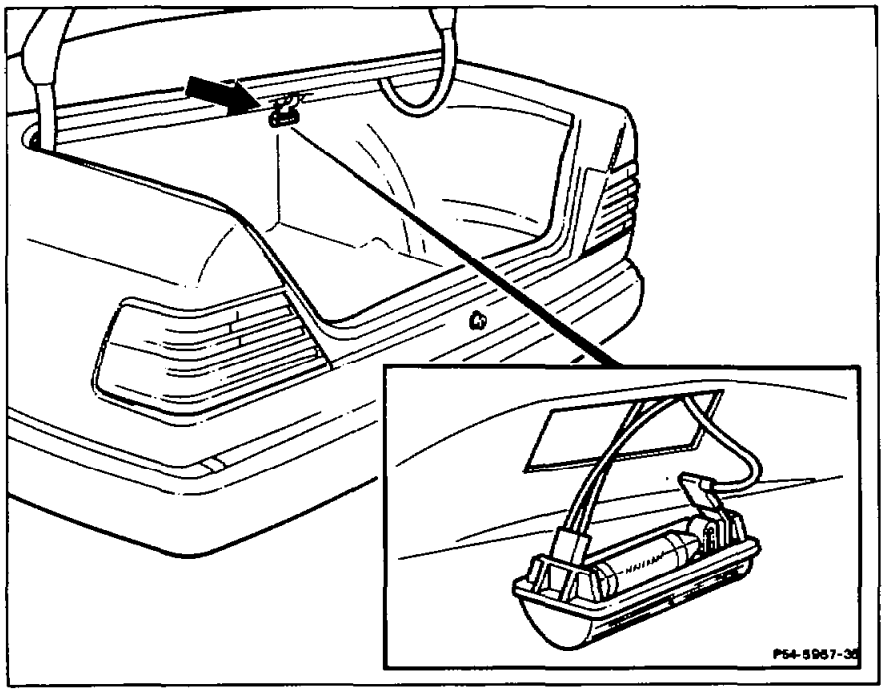

Trunk lighting	unclip, clip in place (arrow).
Electrical connections	unplug, plug in.
Bulb	remove, replace.

Operation no. of operation texts and work units or standard texts and flat rates:

A. Location of fuses

Standard version

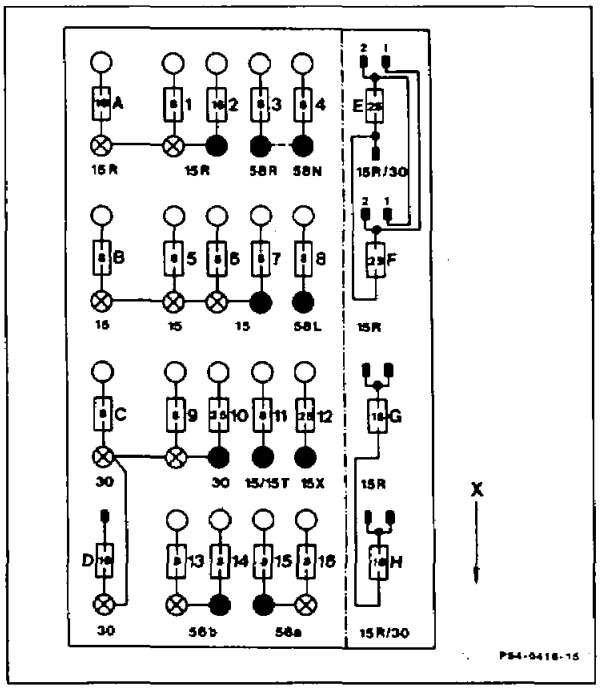

Fuse C differs depending on model and version.
See Wiring Diagrams Model 124

(USA) version

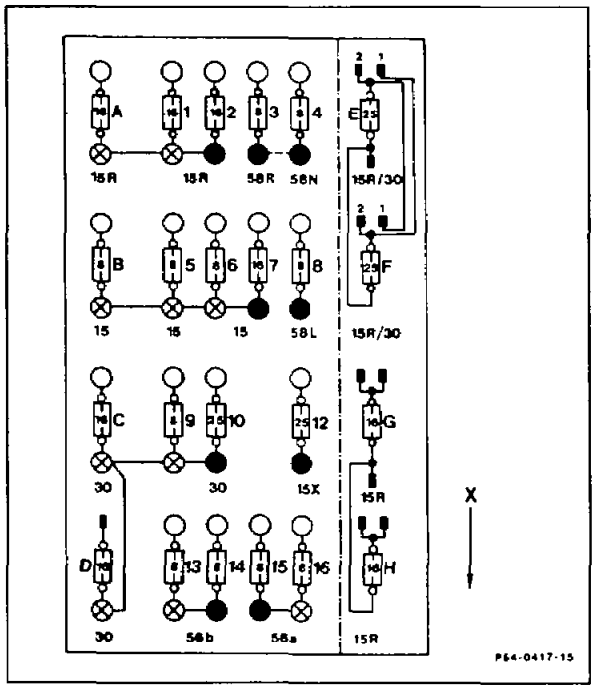

(USA) version Fuse A and B according to model and version.
See Wiring Diagrams Model 124 (USA)

X Direction of travel
○ Protected fuse connection
⊗ Fuse feed without cable connection
● Fuse feed with cable connection
– – Loose jumper, clamped from below

B. Unfused connections

Terminal block (X4/10) 3-pin, terminal 30/ terminal 61 (battery

Assignment:
Fuel pump relay, terminal 30
Idle speed shutoff valve relay with automatic transmission and air conditioner
Overvoltage protection relay, terminal 30

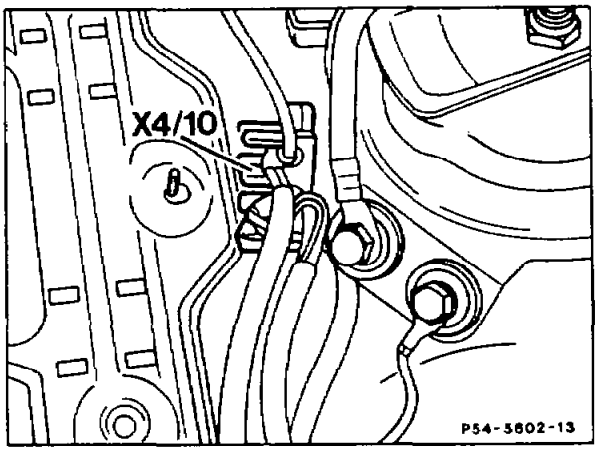

Terminal block (X4, X4/1) terminal 30/interior

Assignment:
ABS (USA)
Battery
Alternator
Exterior light switch
Headlamp flasher, connection to combination switch
Power window relay (USA), (S)
Convenience control relay (USA)
Idle speed shutoff valve relay without automatic transmission and air conditioner
Starter
Preglow time relay (USA)
Ignition starter switch

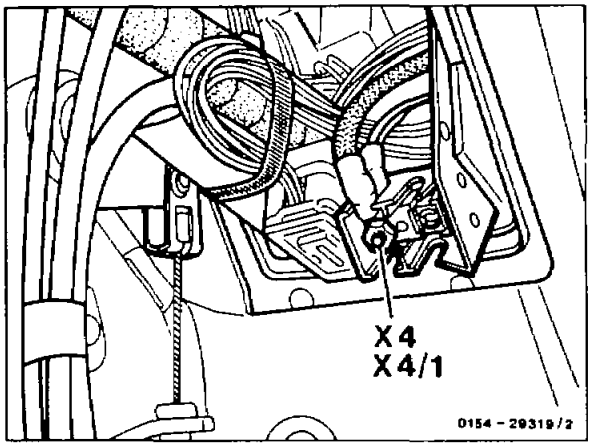

C. Unfused connections in fuse and relay box at fuse carrier

Input fuse	Terminal	Connection
2	15R	Seat belt tensioner/airbag
7	15	Overvoltage protection relay, terminal 15
E/F	15R/30	Convenience control relay, terminal 87
G/H	15R	Power window relay, terminal 87 (S)

54-0405 Warning device for parking brake (rental vehicles)

Operation no. of operation texts and work units or standard texts and flat rates:

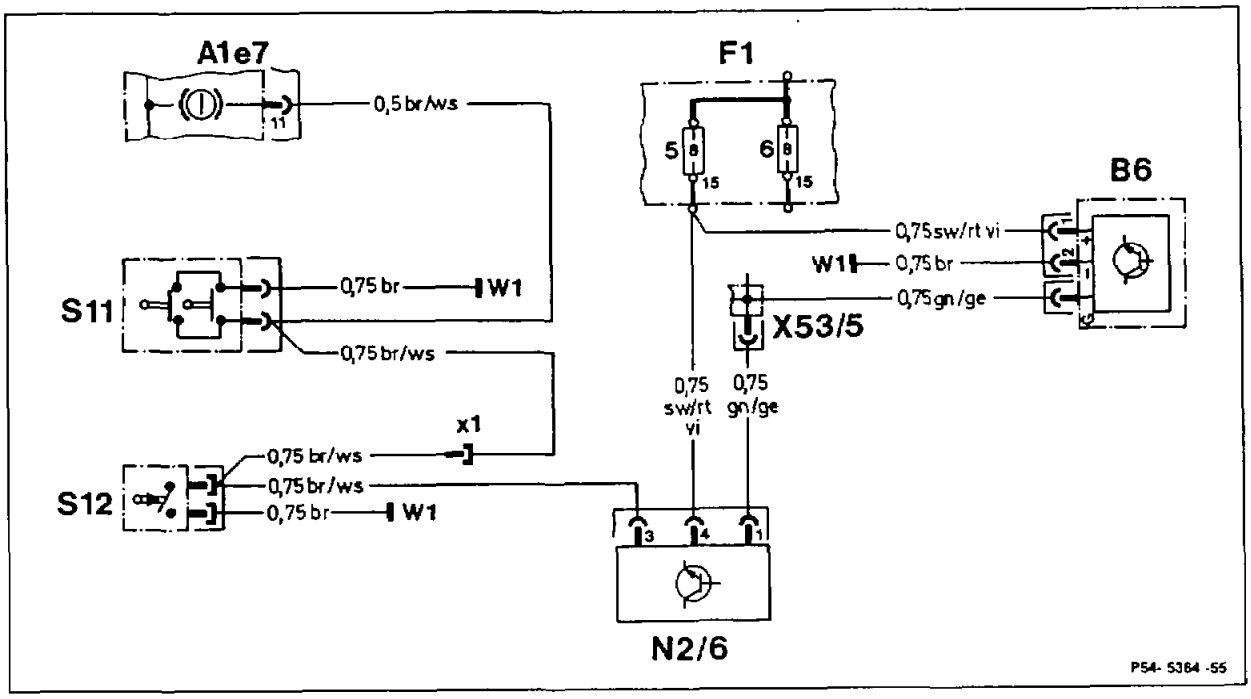

A1	Instrument cluster
A1e7	Brake fluid and parking brake warning lamp
B6	Hall sensor, road speed
F1	Fuse and relay box
N2/6	Parking brake warning device
S11	Brake fluid warning lamp switch
S12	Parking brake warning lamp switch
S12x1	Plug connection, parking brake switch
W1	Main ground (behind instrument cluster)
X53/5	Multiple pin connector/Hall sensor

Function

The voltage for the parking brake warning device (N2/6) is tapped in the fuse and relay box (fuse 5, terminal 15). When the parking brake is applied, ground from the parking brake warning lamp switch (S12) is supplied to the parking brake warning device (N2/6). If a road speed signal is supplied additionally by the Hall sensor (B6), the warning buzzer sounds.

N2/6 Parking brake warning device

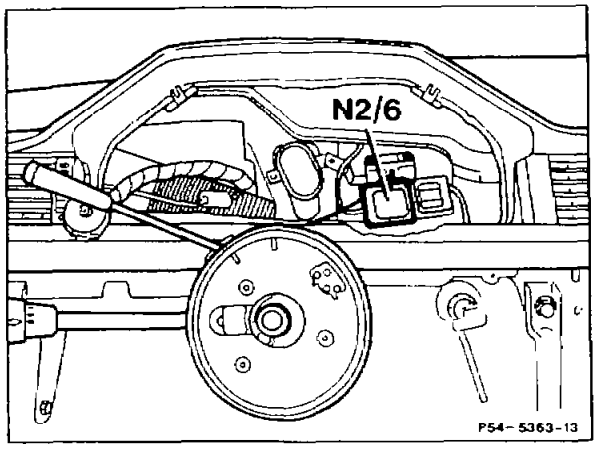

Preceding work:
Testing battery charge state.
All assemblies and equipment in the vehicle operating properly.

A. Testing total no-load current consumption

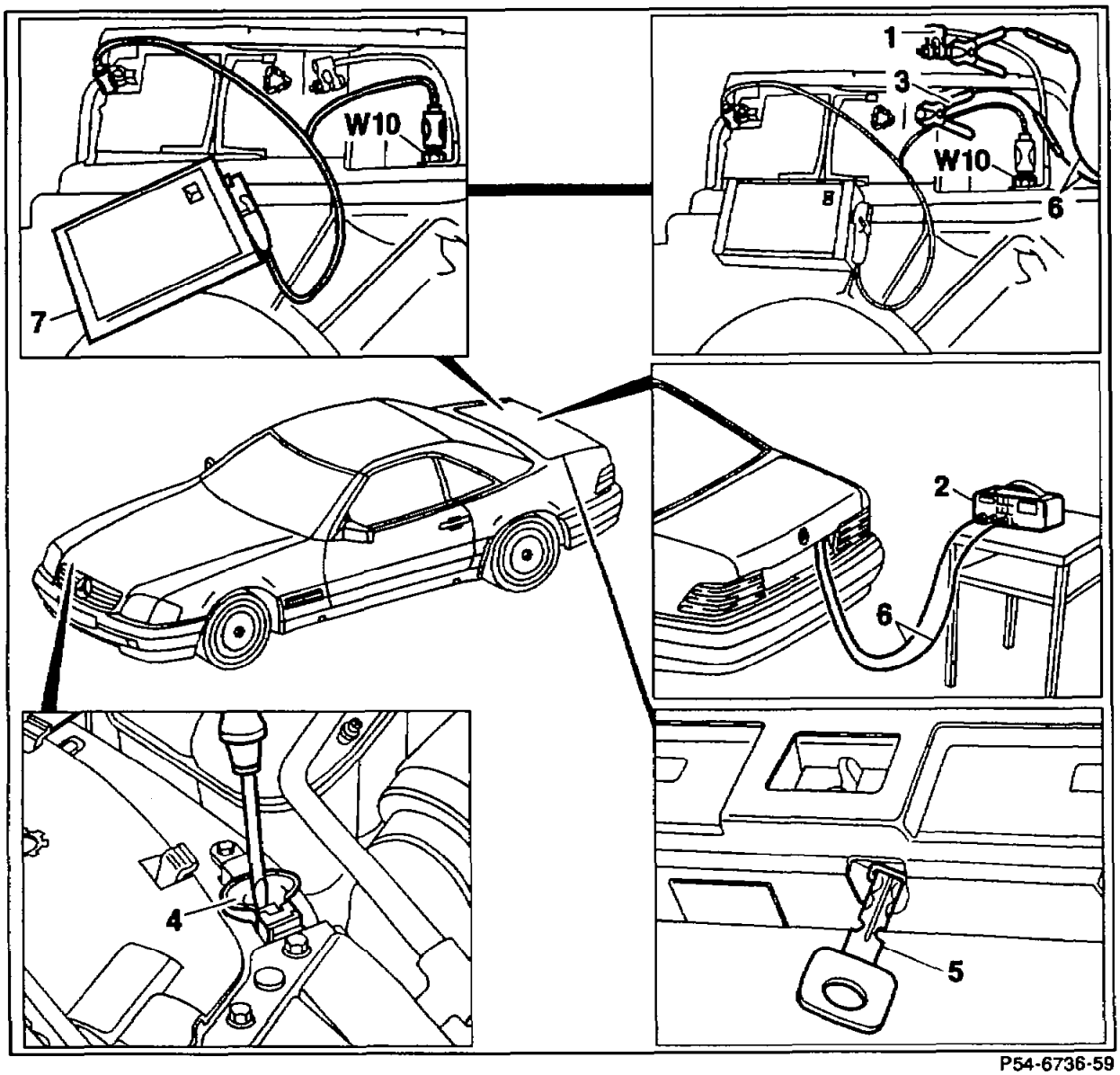

P54-6736-59

Shown on model 129

The test on model 124 is carried out in the same way as in model 129

1	Ground cable	5	Key for operating microswitch at inner trunk lock
2	Multimeter	6	Test cable
3	Negative terminal of battery	7	No-load current retention equipment
4	Right hood lock	W10	Battery ground

Preparing test

Side windows of front doors	open.
All electrical components	switch off e.g.: • remove ignition key, • switch off auxiliary heater, • switch off car phone, • switch off radio, • fold make-up mirror closed, • switch off reading lights, • turn light switch to position "0", • close doors, interior lighting should go off automatically after a few seconds.
	⚠ Pay attention to limit value of multimeter for current measurements. When central locking pump operates, a current of approx. **20 A** flows.

Preparing test with no-load current retention equipment

No-load current retention equipment (7)	connect as follows: Ground cable (–) to battery ground (W10). Positive cable (+) to positive terminal of battery.
No-load current retention equipment (7)	switch on.
Ground cable (1) at battery	disconnect.
Multimeter (2)	connect as follows; use "electrical connection set" (201 589 00 99 00) for this step. Positive cable (+) to battery ground terminal. Negative cable (–) to negative terminal of battery (3).
Multimeter (2)	switch on (Amperes range).
No-load current retention equipment (7)	switch off and disconnect.
Test cables (6)	run to the right out of engine compartment.
	Note On model 124.034/ .036 run the test cables to the right out of the trunk.
Hood	close.
	Note On model 124.034/ .036 close trunk lid.

Preparing test without no-load current retention equipment

Nut of ground terminal	slacken.
	⚠ Do not pull off ground terminal!
Multimeter (2)	switch on (Amperes range).
Multimeter (2)	connect as follows; use "electrical connection set" (201 589 00 99 00) for this step. Positive cable (+) to battery ground (W10). Negative cable (–) to negative terminal of battery (3).
Ground cable (1) at negative terminal of battery (3)	pull off carefully.
	⚠ Do not interrupt circuit otherwise any faults whic exist are erased.
Mulitmeter (2) with test cables (6)	run to the right out of engine compartment.
	Note On model 124.034/ .036 run the test cables to the right out of the trunk.
Hood	close, lock should engage.
	Note On model 124.034/ .036 close trunk lid.

Test

Test step	Test procedure	Tester/ test connection	Operation/ requirement	Specification	Possible cause/ remedy
1	No-load current	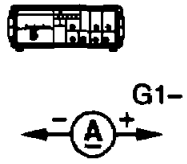	• Lock car • Wait about 4 minutes (run-on time for electrical components)	**No-load current** ≤ 0.05 A (50 mA) or ≤ 0.085 A (85 mA) models with immobilizer	**Readout ≤ 0.05 A, or ≤ 0.085 A** (models with immobilizer) • Carry out test step 2 **Readout > 0.05 A, or > 0.085 A** (models with immobilizer) • Carry out test step 3
2	No-load current	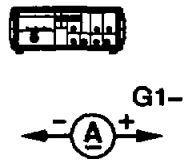	• Unlock car • Wait about 4 minutes (run-on time for electrical components)	**No-load current** ≤ 0.05 A (50 mA) or ≤ 0.085 A (85 mA) models with immobilizer	**Readout ≤ 0.05 A, or ≤ 0.085 A** (models with immobilizer) • End of test **Readout > 0.05 A, or > 0.085 A** (models with immobilizer) • Carry out test step 4

Test step	Test procedure	Tester/ test connection	Operation/ requirement	Specification	Possible cause/ remedy
3	No-load current	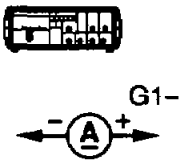	• Unlock car • Wait about 4 minutes (run-on time for electrical components)	**No-load current** ≤ 0.05 A (50 mA) or ≤ 0.085 A (85 mA) models with immobilizer	**Readout ≤ 0.05 A, or ≤ 0.085 A** (models with immobilizer) • Note readout • Then, carry out section B **Readout > 0,05 A, or > 0,085 A** (models with immobilizer) • Carry out test 4
4	No-load current	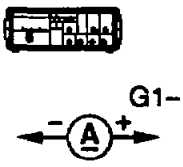	• Open trunk lid • Operate microswitch at trunk lock (5) • Wait about 4 minutes (run-on time for electrical components)	**No-load current** ≤ 0.05 A (50 mA) or ≤ 0.085 A (85 mA) models with immobilizer	**Readout ≤ 0.05 A, or ≤ 0.085 A** (models with immobilizer) • Set switch at trunk lock, replace if necessary (trunk lighting) • As a check, once again carry out test step 1 **Readout > 0.05 A, or > 0.085 A** (models with immobilizer) • Note readout • Then, carry out section B

B. Determining circuit with increased no-load current consumption

Preceding work:
Total no-load current consumption tested (section A).

Preparing test

Open fuse and relay box (F1) and take off cover (7).

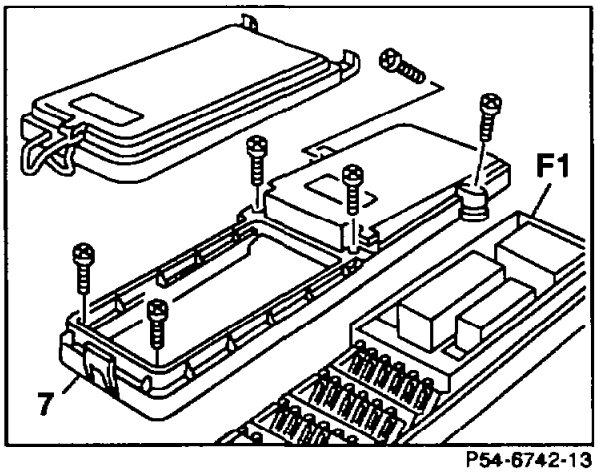

P54-6742-13

Note
When dealing with the problem of increased no-load current when car locked (section A, test step 3), carry out the following points in addition:

- On models with ATA:
  Hold right hood switch (S62) pressed with insulating tape or lock right hood lock (4) with a screwdriver.

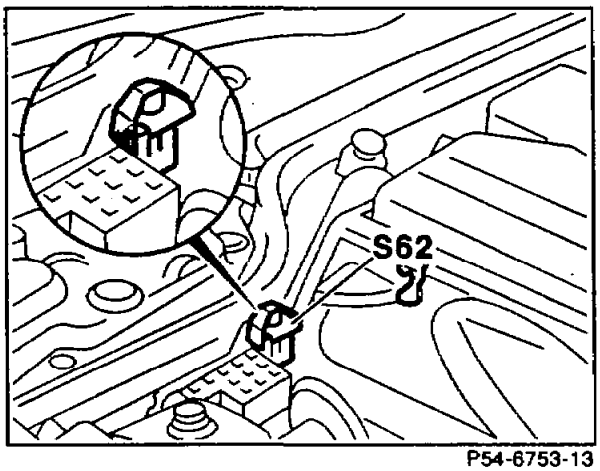

P54-6753-13

Switch on interior motion sensor, if fitted.

- Lock car.

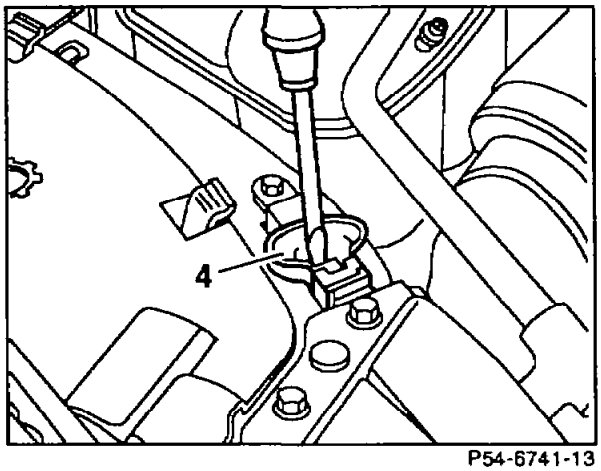

P54-6741-13

Models with module box (model 124.034/ .036) (F23)
Remove cover (13) at module box (F23).

Inspect gasket (10) for signs of damage, replace if necessary.

When the installing the cover (13) ensure the gasket (10) is correctly located.

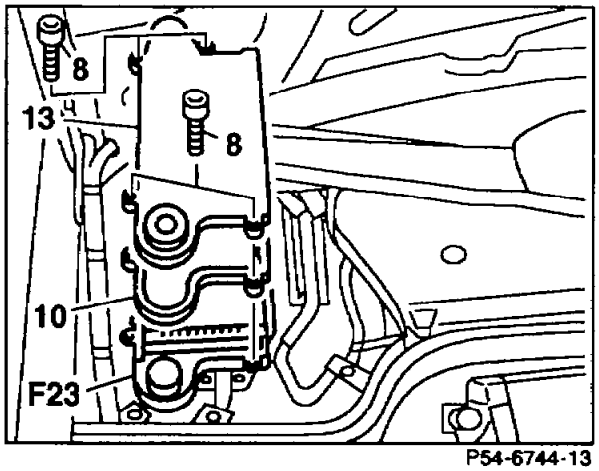

P54-6744-13

Open cover (11) at base module (N16/1).

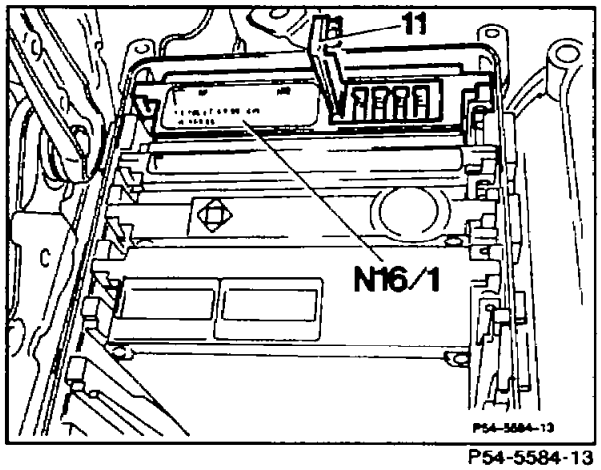

P54-5584-13

Note
In order to avoid incorrect measurements, the switch at the trunk lock has to be operated when the trunk lid is open or, if the switch is missing, the bulbs of the trunk lighting on the left and right have to be removed.

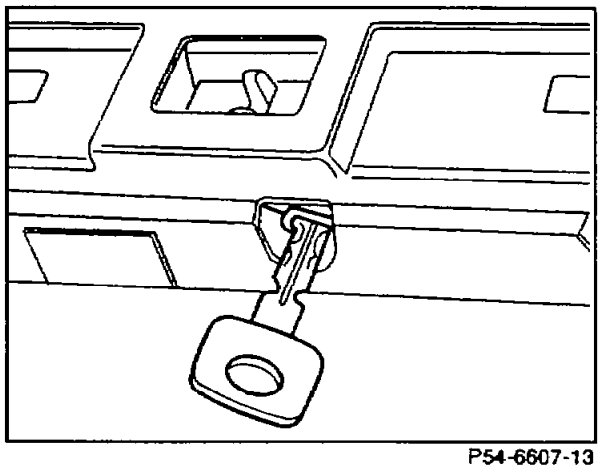
P54-6607-13

Test step 1

⚠

Pay attention to up-to-date information (AI).
First of all check circuits of components which are listed in the up-to-date information.

Fuse ..... remove.

Note

Remove fuses for the ATA only if car is unlocked (alarm signal).

No-load current ..... read off on multimeter (2), connected to battery, and compare with noted figure.

If total no-load current drops <0.02 A (20 mA):

Fuse ..... re-insert.

- Carry out test in the same way with all fuses in the fuse boxes and in the base module. Wait 5 seconds between each individual test.

Note

After inserting a fuse, the connected components may briefly indicate an increased no-load current. The radio by as much as 0.240 A (240 mA).
The increased no-load current consumption is eliminated by switching the radio on and off.

If no fault is found during these tests ..... carry out section D.

If total no-load current drops >0.02 A (20 mA):

Replace the component listed in the up-to-date information or carry out section C, respectively.

Note

After replacing the component listed in the up-to-date information, once again test total no-load current consumption (section A).

- On models with ATA, unlock hood lock on right or remove insulating tape from hood switch (S62).

If total no-load current increases >0.02 A (20 mA):
Cause return current along a different current path, carry out test step 2.

Test step 2

Test cables (6) and, as need be, test adapter . . . connect to a second multimeter, switch on (Amperes range).

Faulty fuse (from test step 1 models up to approx. 08/95) . . . . . remove.

Multimeter . . . . . connect to fuse carrier and read off no-load current after 5 seconds.

No-load current ≤0.02 A (20 mA):
- The protected circuit is o.k.
- Re-insert fuse, wait 5 seconds and test all further fuses as specified in test step 1.

Note
After inserting a fuse, the connected components may briefly indicate an increased no-load current. The radio by as much as 0.240 A (240 mA).
The increased no-load current consumption is eliminated by switching the radio on and off.

No-load current >0.02 A (20 mA):
- Determine the protected components with an increased no-load current consumption (section C).

C. Determining protected components with increased no-load current consumption

Preceding work:
Total no-load current consumption tested (section A).
Circuit with the increased no-load current consumption determined (section B).

Test cables (6) and, as need be, test adapter ...	connect to a second multimeter, switch on (Amperes range).
Multimeter	connect to faulty fuse.
Possible no-load current consumer at fault fuse	determine according to fuse box insertion sheet or wiring diagram file "Wiring Diagrams Passenger Cars" and unplug connector.
No-load current	read off at second multimeter.

No-load current >0.02 A (20 mA):

- Component is o.k., plug in connector again at the tested component.
- Carry out test in the same way with all the possible components at the faulty fuse.

Note

If a measurement is made at the fuse carrier of the radio or if the connector of the radio is unplugged, the no-load current may rise by approx. 0.240 A (240 mA).
The increased no-load current is eliminated by switching the radio on and off.

No-load current ≤0.02 A (20 mA):

- Replace component.

Total no-load current	test once again at multimeter (2) which is connected to the battery.

Readout ≤0.05 A (50 mA) or ≤0.085 A (85 mA) models with immobilizer

- End of test.

⚠

On models with ATA unlock hood lock on right or remove insulating tape from hood switch (S62).

Readout >0.05 A (50 mA) or >0.085 A (85 mA) models with immobilizer

- After this determine no-load current consumption at the next untested fuses (section B).

D. Determining unprotected components with increased no-load current consumption

Preceding work:
Total no-load current consumption tested (section A).
Circuit with the increased no-load current consumption determined (section B).

Unprotected components	are e.g.: • Components of exhaust gas recirculation system (EGR) • Components of airbag system (AB) • Components of knock control system (KSS) • Components of electronic ignition system (DI) • Base module (BM) • Anti-theft systems e.g. immobilizer • Components of idle speed control (ISC) system • Generator, starter ignition switch Unprotected components see "Wiring Diagrams".
Multimeter (2)	disconnect at negative terminal of battery (3).
Coupling or connection at possible no-load current consumer	separate and tie back to ensure no contact (determine connector or connection in wiring folder "Wiring Diagrams Passenger Cars".
Multimeter (2)	connect to negative terminal of battery (3) and wati about 4 minutes (run-on time for electronic components). **Note** The no-load current consumption may rise as a result of the radio by approx. 0.240 A (240 mA). The increased no-load current consumption is eliminated by switching the radio on and off.

Read off no-load current on multimeter (2) and compare with noted figure . . . . . .

If total no-load current drops ≤0.02 A (20 mA) or ≤0.035 A (35 mA) in the case of a immobilizer control module:

- Component is o.k.
- Disconnect multimeter (2) at negative terminal of battery (3)
- Plug in connector or connection again at the component
- Repeat test with all possible no-load current consumers as described

If total no-load current drops >0.02 A (20 mA) or >0.035 A (35 mA) in the case of a immobilizer control module:

- Replace component

Test total no-load current at multimeter (2) . . . . .

Readout ≤0.05 A (50 mA) or ≤0.085 A (85 mA) models with immobilizer

- End of test.

⚠

- On models with ATA unlock hood lock on right or remove insulating tape from hood switch (S62)

Readout >0.05 A (50 mA) or >0.085 A (85 mA models with immobilizer)

- Carry out test with unprotected no-load current consumers not yet tested, as described

Special tools

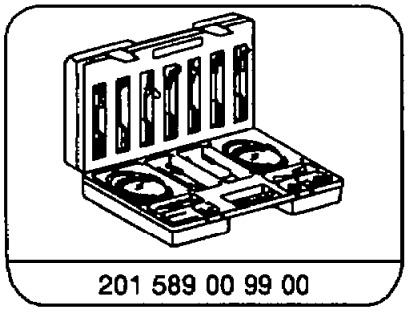

201 589 00 99 00

Commercially available tools and testers, MB testers (see Workshop Equipment Manual)

Designation	E.g. make, order no.
Multimeter	Sun DMM-5 Fluke, 88
No-load current retention equipment	Hans Zeheter CMP 12.2

54–1255 Removing and installing front fuse and relay box and location of auxiliary fuse boxes

Operation no. of operation texts and work units or standard texts and flat rates:

A. Removal, installation

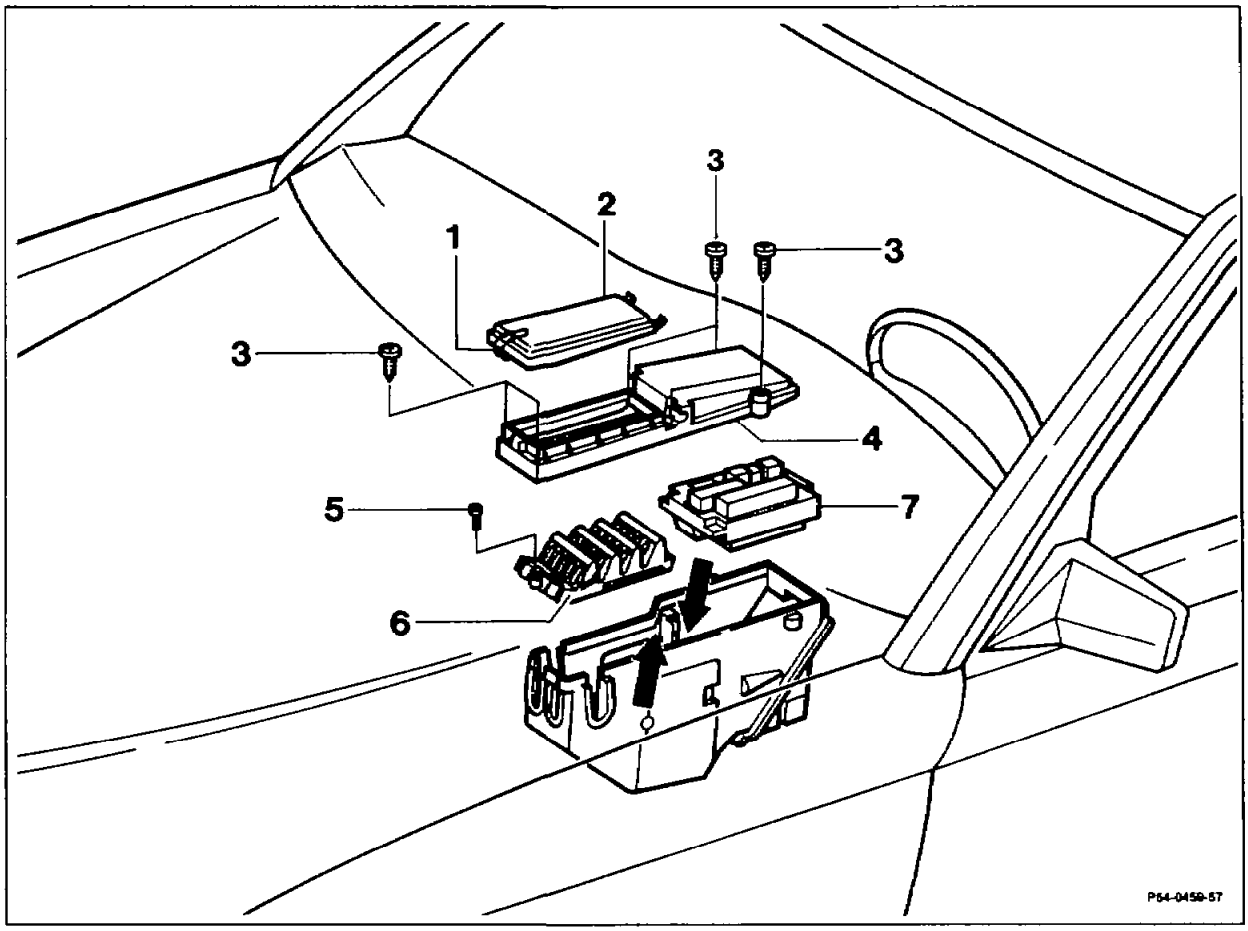

Catch (1)	open, close.
Cover of fuse box (2)	take off, fit on.
Phillips screws (3)	unscrew, screw in.
Cover of relay box (4)	take off, fit on.
Phillips screw (5)	unscrew, screw in.
Fuse carrier (6)	take out, insert.
Fuse and relay box	press apart (arrow).
Relay holder (7)	take out, insert.

Note
The catches (arrows) must be pressed in order to remove the couplings for the relays.

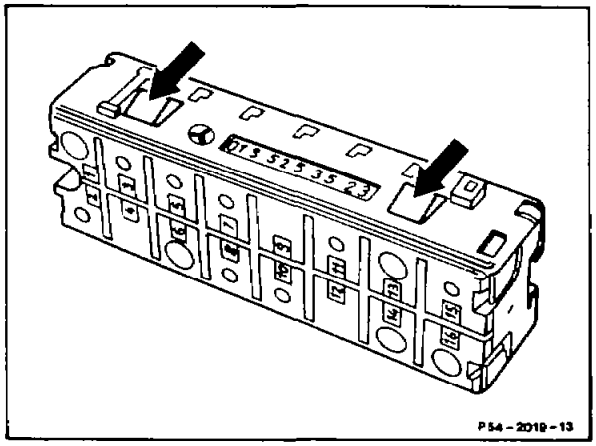

B. Location of auxiliary fuse boxes

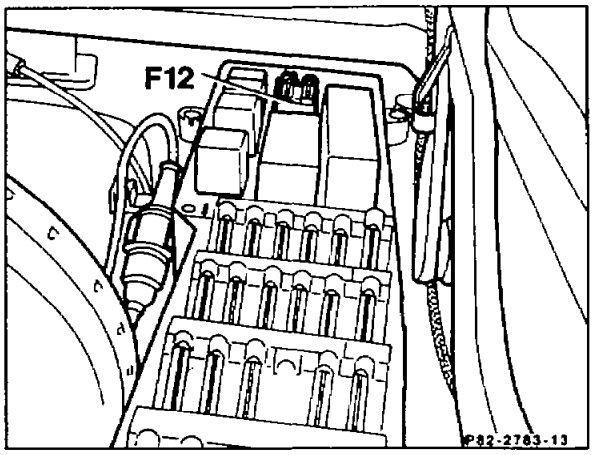

F12 Auxiliary fuse box, auxiliary heater (STH)

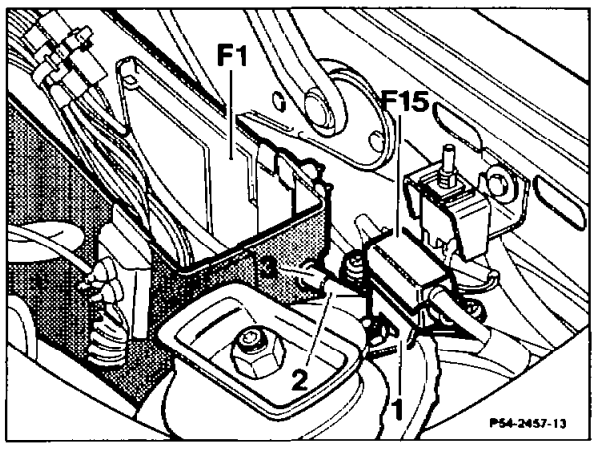

F15 Auxiliary fuse box, automatic climate control (KLA), automatic temperature control (TAU) blower motor

F22 Auxiliary fuse box, automatic climate control (KLA), terminal 15X

Model 124.034

F22/1 Auxiliary fuse box, trailer coupling/heated seats (AHV/SIH)

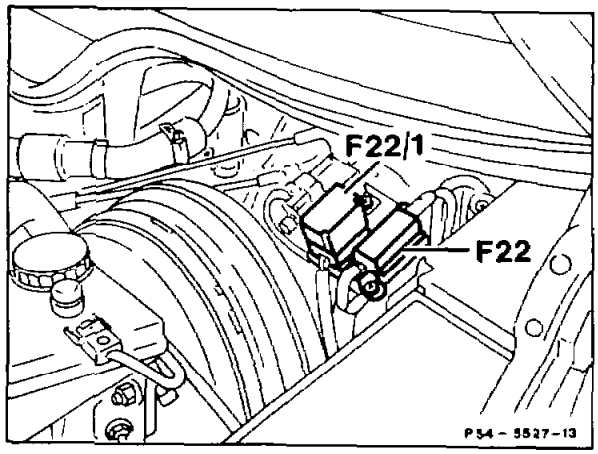

Except model 124.034

F22/1 Auxiliary fuse box, trailer coupling/heated seats (AHV/SIH)

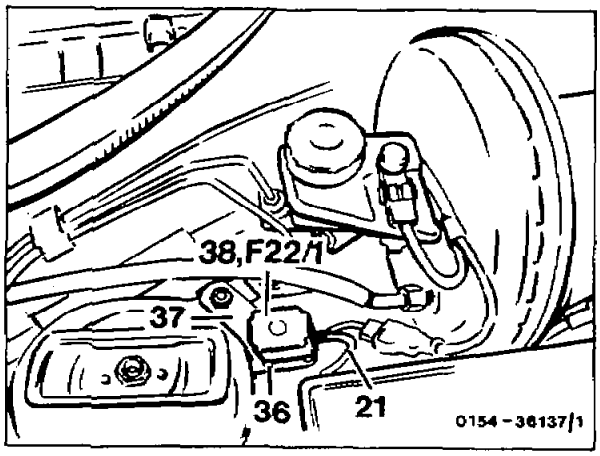

F22/2 Auxiliary fuse box, telephone, terminal 30

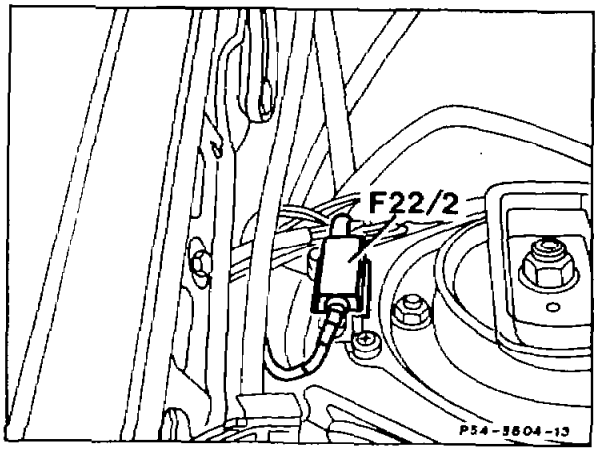

C. General

A fuse holder with 4 fuses may be inserted additionally for certain optional equipment.

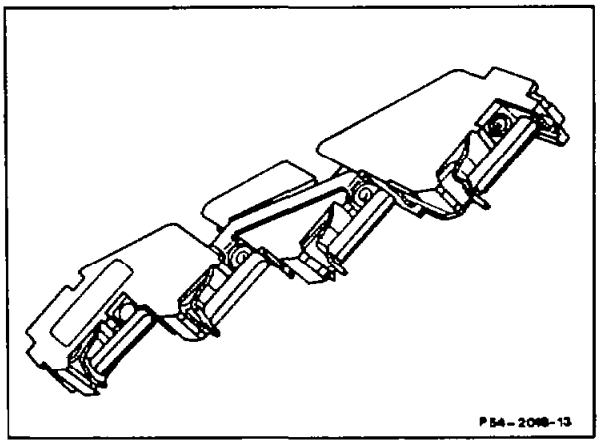

As of 07/86 vehicles with automatic climate control are fitted with an auxiliary fuse box (F15), automatic climate control (KLA)/automatic temperature control (TAU) blower motor, with a 30 A leaf fuse for the blower motor.

If, when working on the fuse and relay box on vehicles from start of production up to 06/86, it is found that the blower fuse (no. 12) has lowered, install the auxiliary fuse box (54–0180).

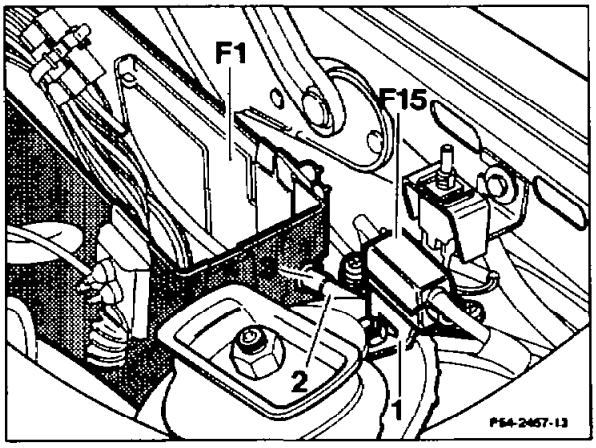

25 A fuses with solder point have been installed since 03/86.

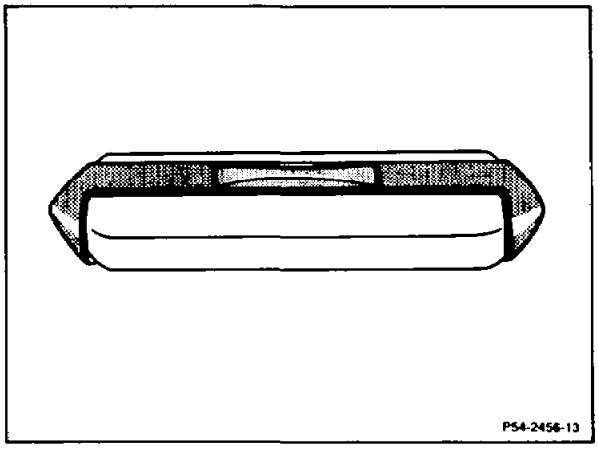

D. Replacing threaded sleeve

Note
The threaded sleeves for the rear securing screws of the relay box cover (arrows) can be replaced if the securing screws are tight and have to be drilled off.

Scope of work

1 Remove cover from fuse box.

2 Remove securing screws.

3 Drill off head of tight screw(s) with 7 mm dia. drill.

4 Remove cover of relay box.

5 Carefully knock out damaged threaded sleeve(s) with a punch.

6 Coat new threaded sleeve(s) with Loctite and draw into the housing with a screw.

7 Fit on covers again.

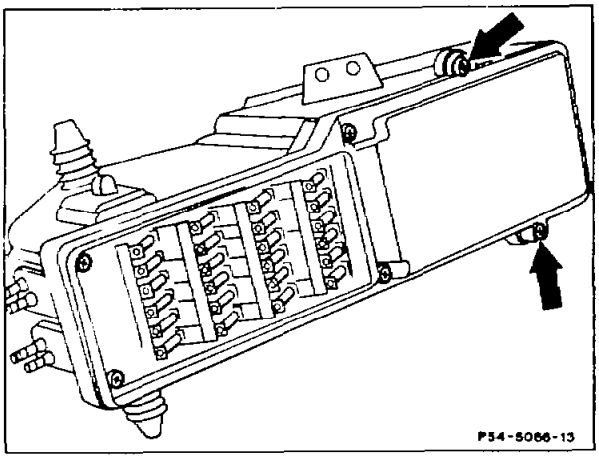

Parts

Designation	Part no.
M 4x25 screw	007985 004151
Threaded sleeve	000 545 11 50
Loctite	002 989 93 71

Operation no. of operation texts and work units or standard texts and flat rates:

A. Checking electrolyte level (except model 124.034/ .036)

⚠
Pay attention to warning instructions and safety precautions (operation no. 54–0001, section A)!

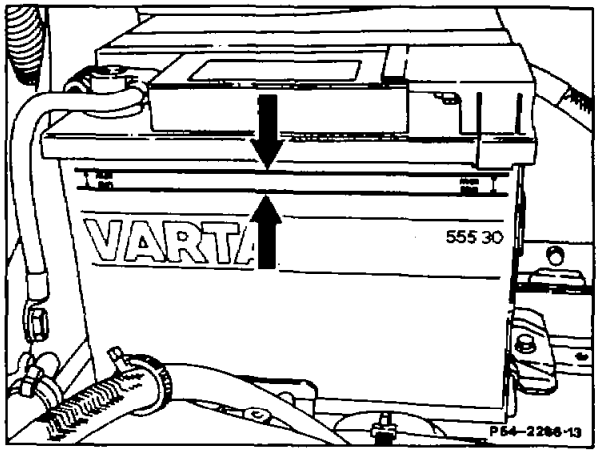

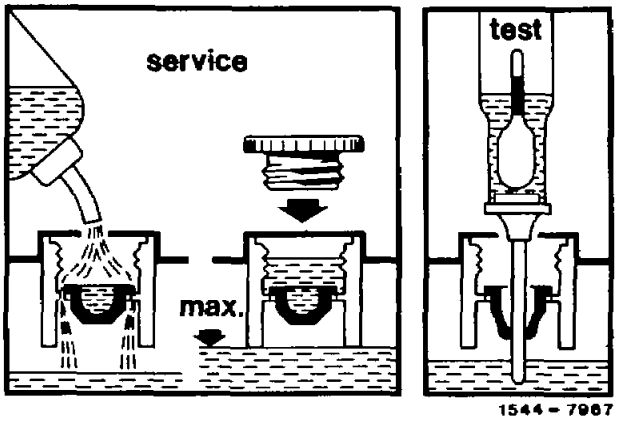

Version A

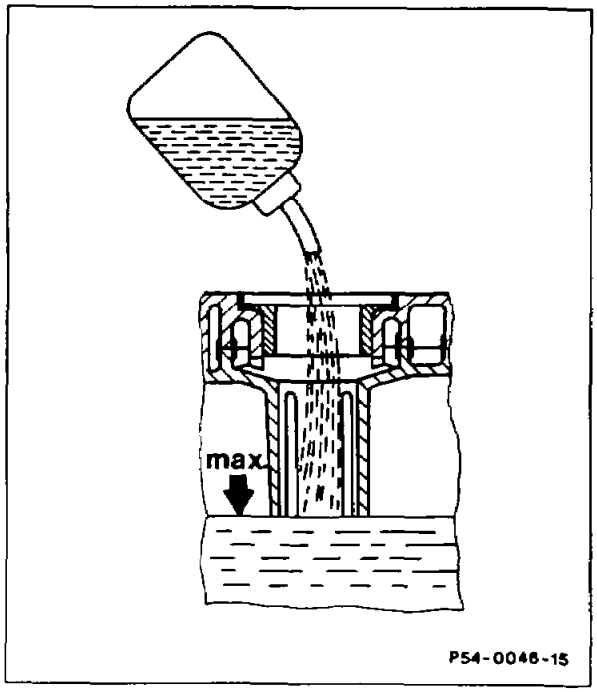

Version B

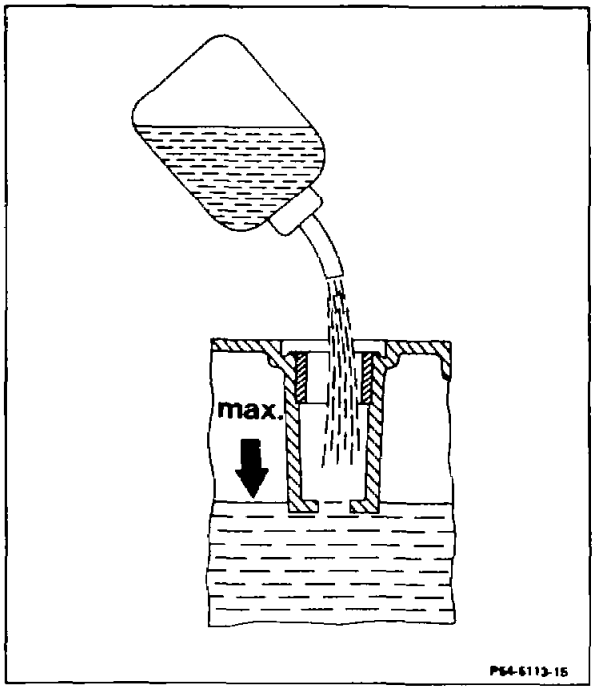

Version C

Version A

Battery with overfill protection
Identification feature: sticker "overfill protection" on battery

Electrolyte level	check against housing marking (arrows).
If destilled water has to be added or if electrolyte level is not visible from outside, cell caps	unscrew, screw in.
Destilled water	top up if necessary until water no longer flows out in overflow protection.

Note
Do not pierce the membrane of the diaphragm protection when topping up.

Versions B and C

Electrolyte level	check against housing marking (arrows).
If destilled water has to be added or if the electrolyte level is not visible from the outside, cell caps	unscrew, screw in.
Destilled water	top up if necessary. Version B: Up to bottom edge of filler pipe Version C: Up to top edge of web

B. Checking battery state

⚠
Pay attention to warning instructions and safety precautions (operation no. 54–0001, section A)!

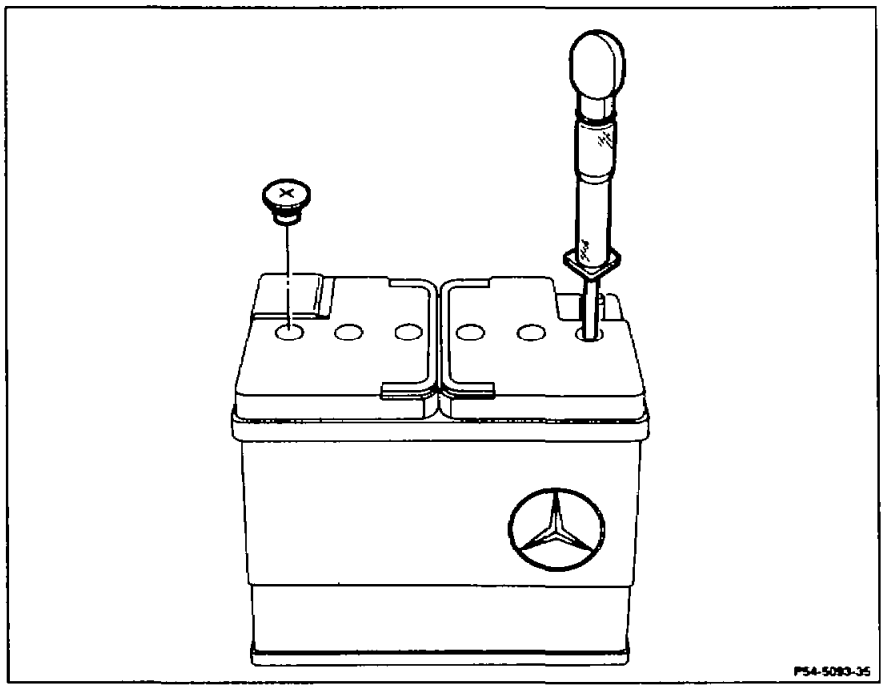

Visual check	for signs of leaks on outside.
Cell caps	unscrew, screw in.
Electrolyte density	measure, min. 1.24 kg/dm³. If the electrolyte density in one or several cells differs > 0.04 kg/dm³ from the others, replace battery. Electrolyte density < 1.24 kg/dm³, charge battery, perform section C.

Test data

Electrolyte density in kg/dm³ at 20 °C	charged	1.28
	semi-charged	1.20
	discharged	1.12

C. Charging

Preceding work:
Section B. Checking battery state

Electrolyte level	check, add destilled water if necessary. No fault can be found, perform load test, section D.
Battery	remove, install.
Cell caps	unscrew.
Electrolyte level	check, add destilled water if necessary.
Cell caps	screw in.
Positive terminal (+) of charger	connect to positive terminal (+) of battery, disconnect.
Negative terminal (–) of charger	connect to negative terminal (–) of battery, disconnect.
Charger	switch on, switch off. The charging current should not exceed 10 % of the battery capacity, e.g. charging current max. 6.2 A for 62 Ah battery.

Note on quick charging
Use battery charging room due to development of explosive gas.
Max. charging current for 30 minutes 50 % of battery capacity.
Example: 12 V 62 Ah battery. Charging current for quick charging for 30 minutes **max. 31 amperes**, then continue charging normally.

Acid density	measure, specified value 1.28 kg/dm³.

Charge state

Charge state with electrolyte density in kg/dm³ and at 20 °C	charged	normal Tropics	1.28 1.23	(in order)
	semi-charged	normal Tropics	1.20 1.16	(recharging necessary)
	discharged	normal Tropics	1.12 1.08	(recharge immediately)

Note
The electrolyte density varies with temperature and alters by 0.01 kg/dm³ for each 15 °C.
Examples:
Electrolyte density at 20 °C 1.28 kg/dm³
Electrolyte density at 35 °C 1.29 kg/dm³
Electrolyte density at 5 °C 1.27 kg/dm³

D. Load test

Preceding work:
Section B. Checking battery state

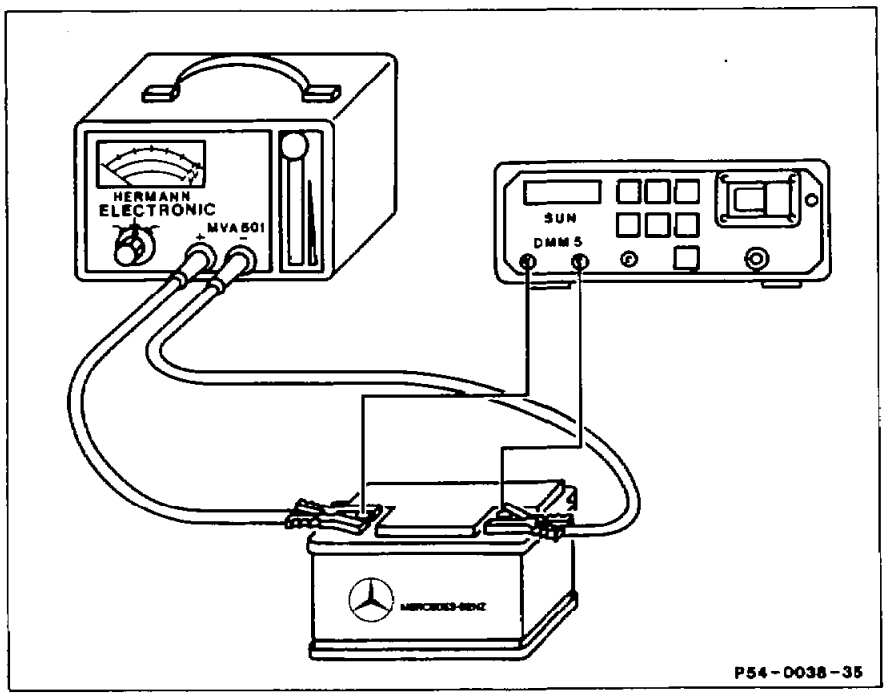

Battery	remove, install.
Electrolyte density	measure, min. 1.24 kg/dm³; if electrolyte density < 1.24 kg/dm³, charge battery.
Load test	perform at approx. 20 °C (see table).
Minimum battery voltage	test. Specification after 10 seconds approx. 10 V or >10 V. If the specification is not achieved, replace battery. If the specification is achieved, charge battery.
Electrolyte density	measure, specification 1.28 kg/dm³.

Battery test under load

Capacity	Ah	62	72/74	92	100
Load current	A	190	265	280	300
Minimum voltage in volts after 10 s at electrolyte density in kg/dm³	1.28	10	10	10	10
	1.24	9	9	9	9

Operation no. of operation texts and work units or standard texts and flat rates:

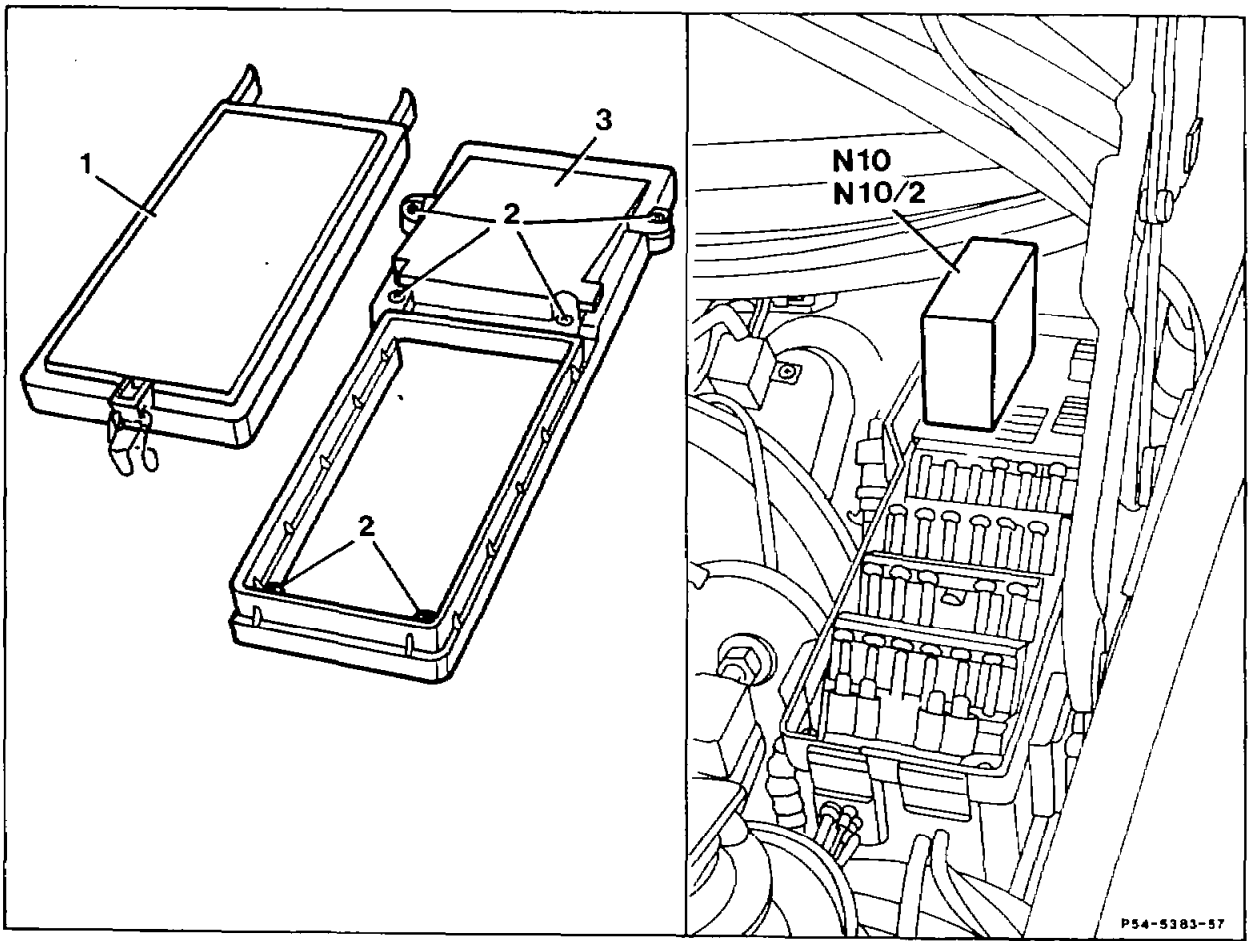

Catch	open, close.
Cover of fuse box (1)	take off, fit on.
Screws (2)	unscrew, screw in.
Cover of relay box (4)	take off, fit on.
Combination relays (N10, N10/2)	take out, insert.

54–1555 Removing and installing horns of two-tone signal system or fanfares

Operation no. of operation texts and work units or standard texts and flat rates:

A. Removing and installing horns/fanfare on strut in front of radiator (except model 124.061 up to 07/93 and model 124.036)

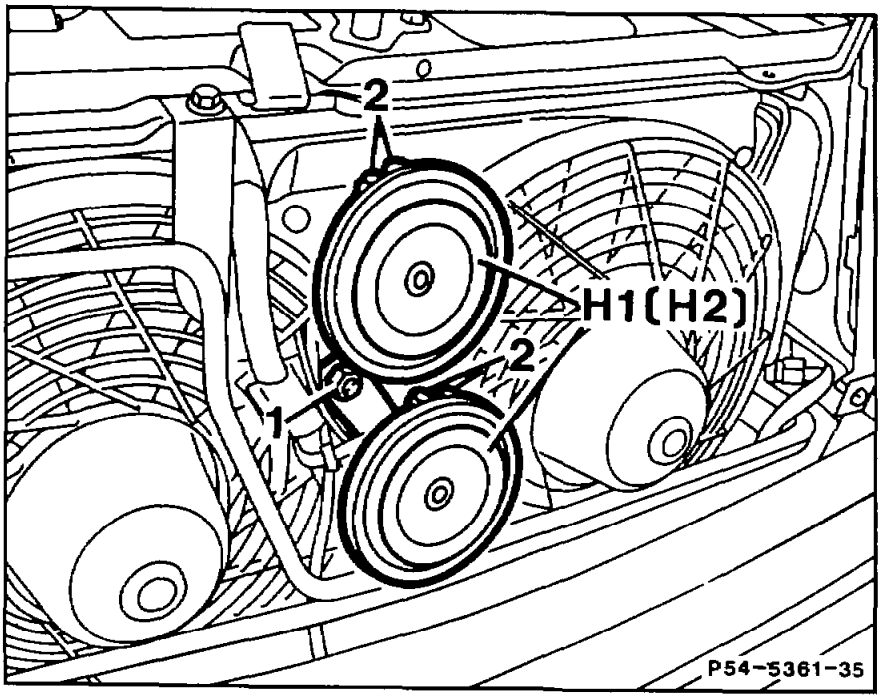

Nut (1)	unscrew, screw on.
Horns of two-tone signal system (H1) or fanfare (H2)	take out, insert.
Cables (2)	disconnect, connect.

B. Removing and installing fanfare on strut in front of radiator and in front right wheelhouse (model 124.036)

Preceding work:
Liner of front right wheelhouse removed.

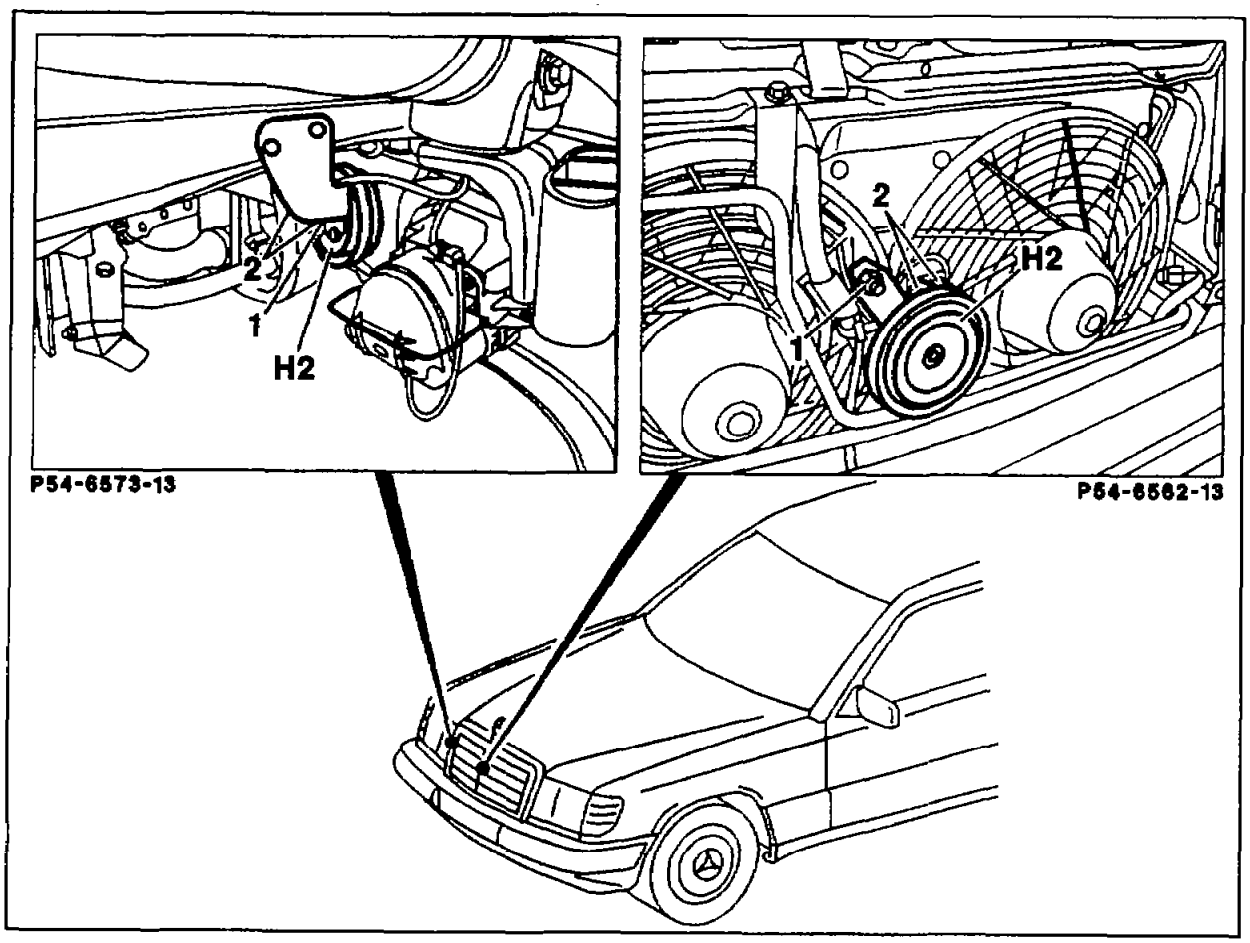

Nut (1)	unscrew, screw on.
Fanfare (H2)	take out, insert.
Cables (2)	disconnect, connect.

C. Removing and installing fanfare on strut in front of radiator and behind bumper (model 124.061 up to 07/93)

Preceding work:
Engine compartment panel removed (61-0105)

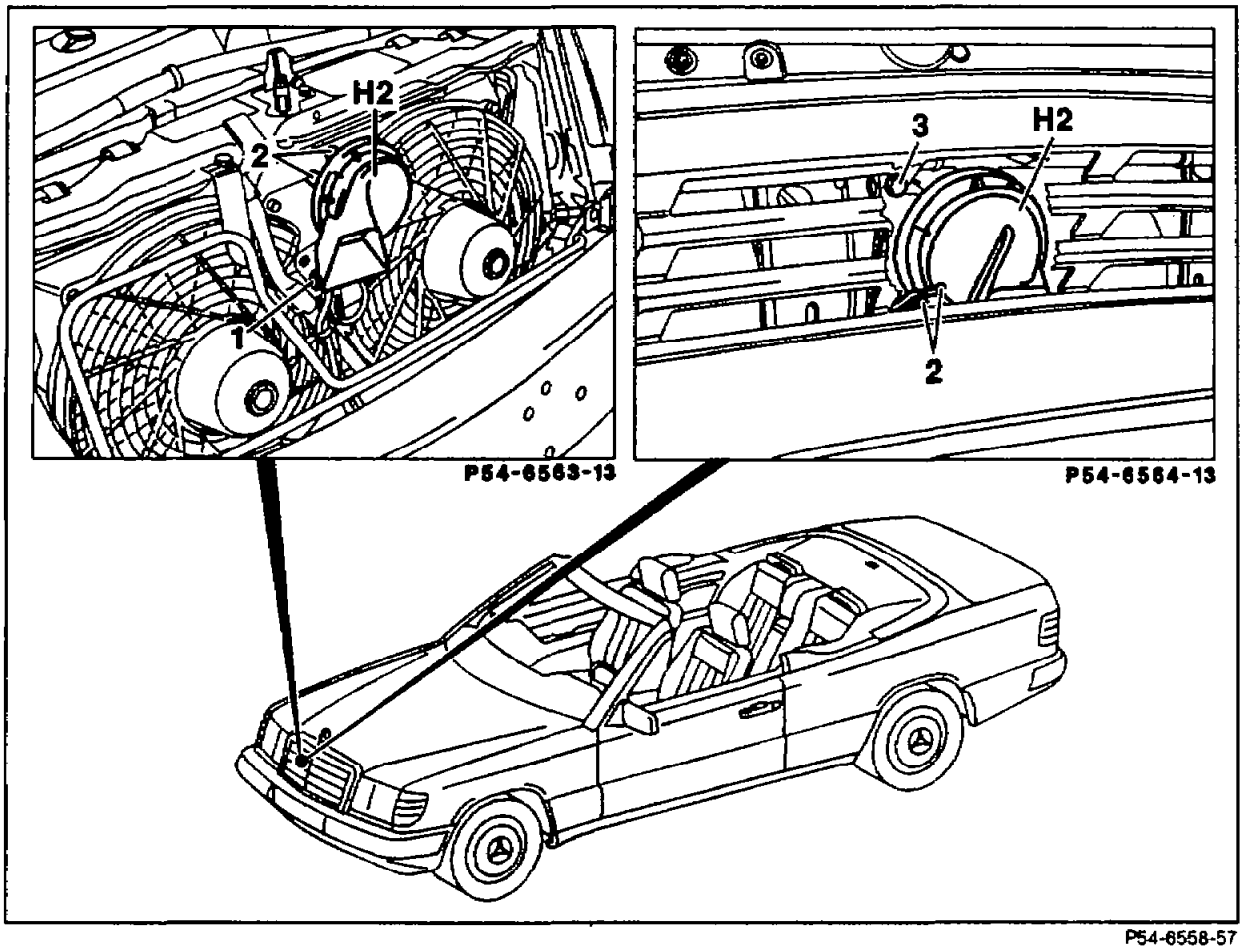

Leads (2) to upper fanfare (H2)	disconnect, reconnect.
Nut (1)	screw off, screw on.
Upper fanfare (H2)	remove together with bracket, reinstall.
Screw (3) on bottom fanfare (H2)	screw out, screw in.
Bottom fanfare (H2)	remove, install.
Leads (2) to bottom fanfare (H2)	disconnect, reconnect.

54–2300 Removing and installing control units of module box (model 124.034/ .036)

Operation no. of operation texts and work units or standard texts and flat rates:

A. Removal, installation

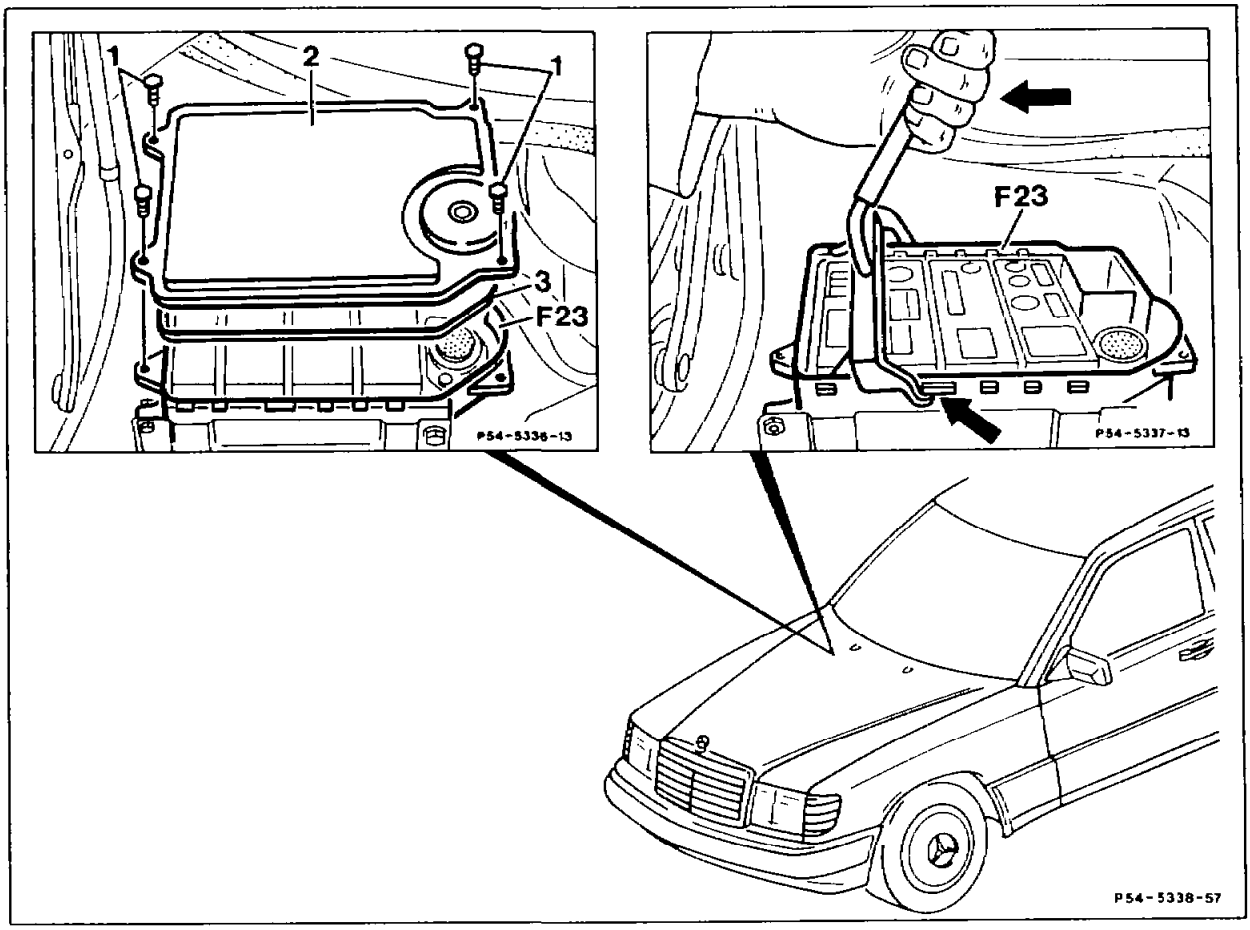

Ground cable at battery	disconnect, connect.
Bolts (1)	unscrew, screw in.
Lid (2) of module box (F23)	lift off, fit on.

Gasket (3)	check for signs of damage; when installing, ensure gasket (3) is correctly seated.
Control units	remove with special tool 140 589 01 33 00. Install by hand, press in if necessary, with special tool 140 589 01 33 00; when doing this, pay attention to coloured marking of control units and coupling fields, see section B.

Note

All the control units and couplings in the module box are provided with a security element to prevent incorrect connection. In addition, coloured markings (arrow) are provided on the control units which are identical with the colours of the clutch housings.

A number of control units have two terminal strips, the coupling for the second terminal strip being darker in colour like the marking on the control unit.

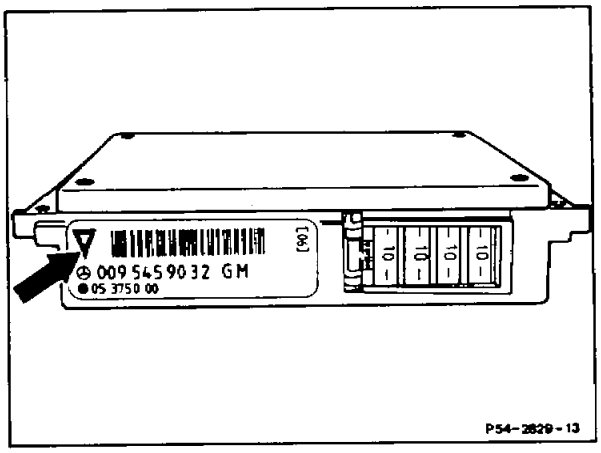

Special tool

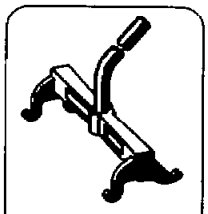

140 589 01 33 00
07

B. Module box assignment

Colored marking on control units	Color of harness connector
N3/1 hot wire (LH) control unit **light green**	Light green Dark green
N4/1 electronic accelerator pedal (EFP)/Tempomat cruise control (TPM) control unit **light orange**	Light orange Dark orange
N16/1 base module (GM) **black**	Black
N30/1 ASR control unit **light grey**	Light grey Dark grey

54-2311 Removing, installing control modules (except model 124.034/ .036)

Preceding work:
Hood raised to vertical position (01-0008)

Operation no. of operation texts and work units or standard texts and flat rates:

Removing, installing

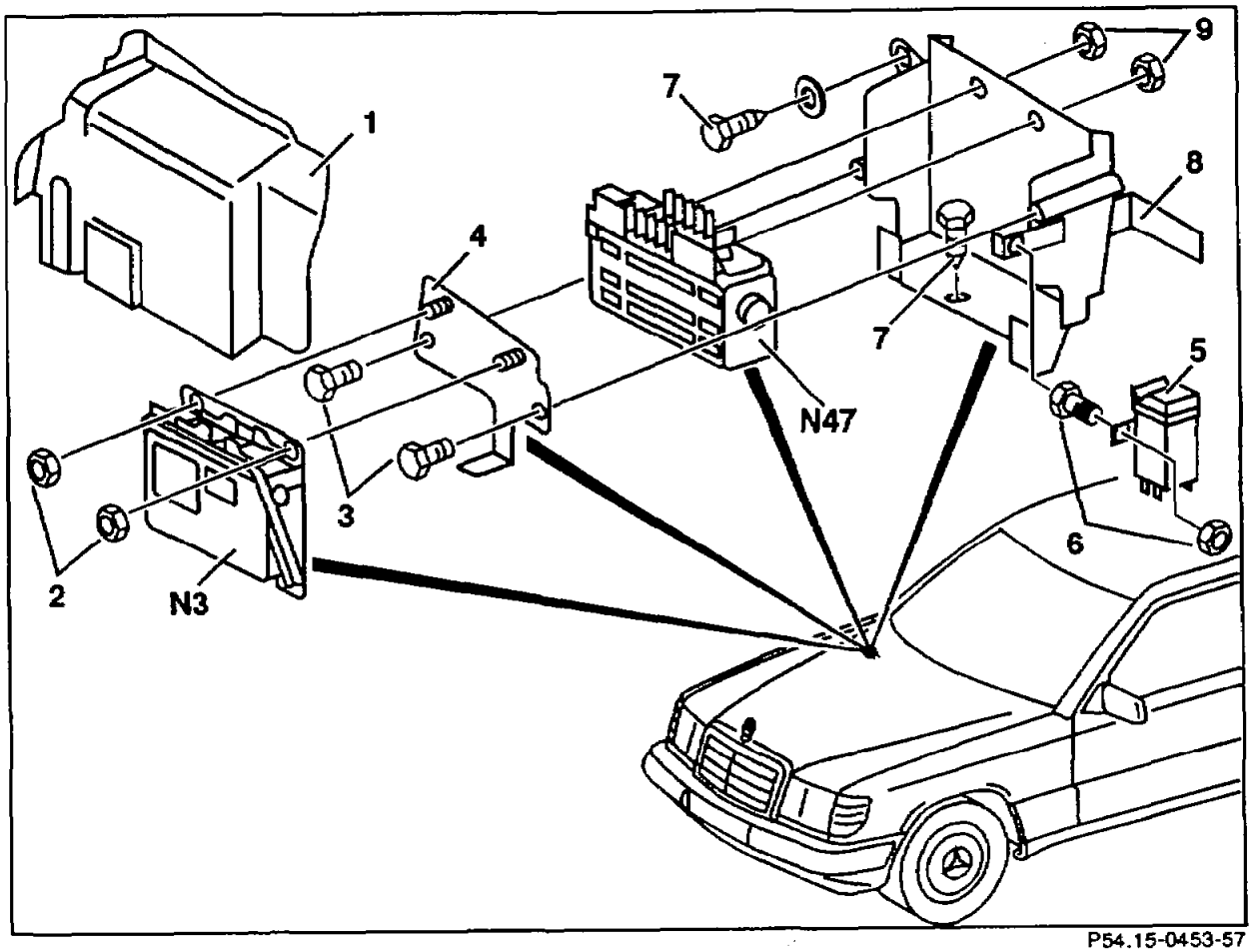

P54.15-0453-57

Cover of control modules (1)	remove, install.
Battery	remove, install.
	Note If necessary, connect no-load current retention equipment.
Connector at fuel injection system control module (N3)	separate, connect.
Injection system control module (N3)	remove, install. Take out nuts (2), screw in for this step.
Bracket of injection system control module (4)	remove, install. Remove bolts (3) for this step, insert.

Overvoltage protection relay (5)	remove, install. Take bolted connection (6) out of bracket of control modules (8) for this step, insert.
Connectors at traction systems (N47)	separate, connect.
Bracket of control modules (8)	remove, install. Remove bolts (7) for this step, insert.
Bracket of control modules (8) together with traction systems control module (N47)	remove, insert.
Traction systems control module (N47)	take off from control modules bracket (8), fit on. Unscrew nuts (9) for this step, insert.

54-2312 Seat belt warning control unit (USA)/seat belt and road speed warning control unit (SA)

Operation no. of operation texts and work units or standard texts and flat rates:

A. Function of seat belt warning control unit N2/4 (USA)

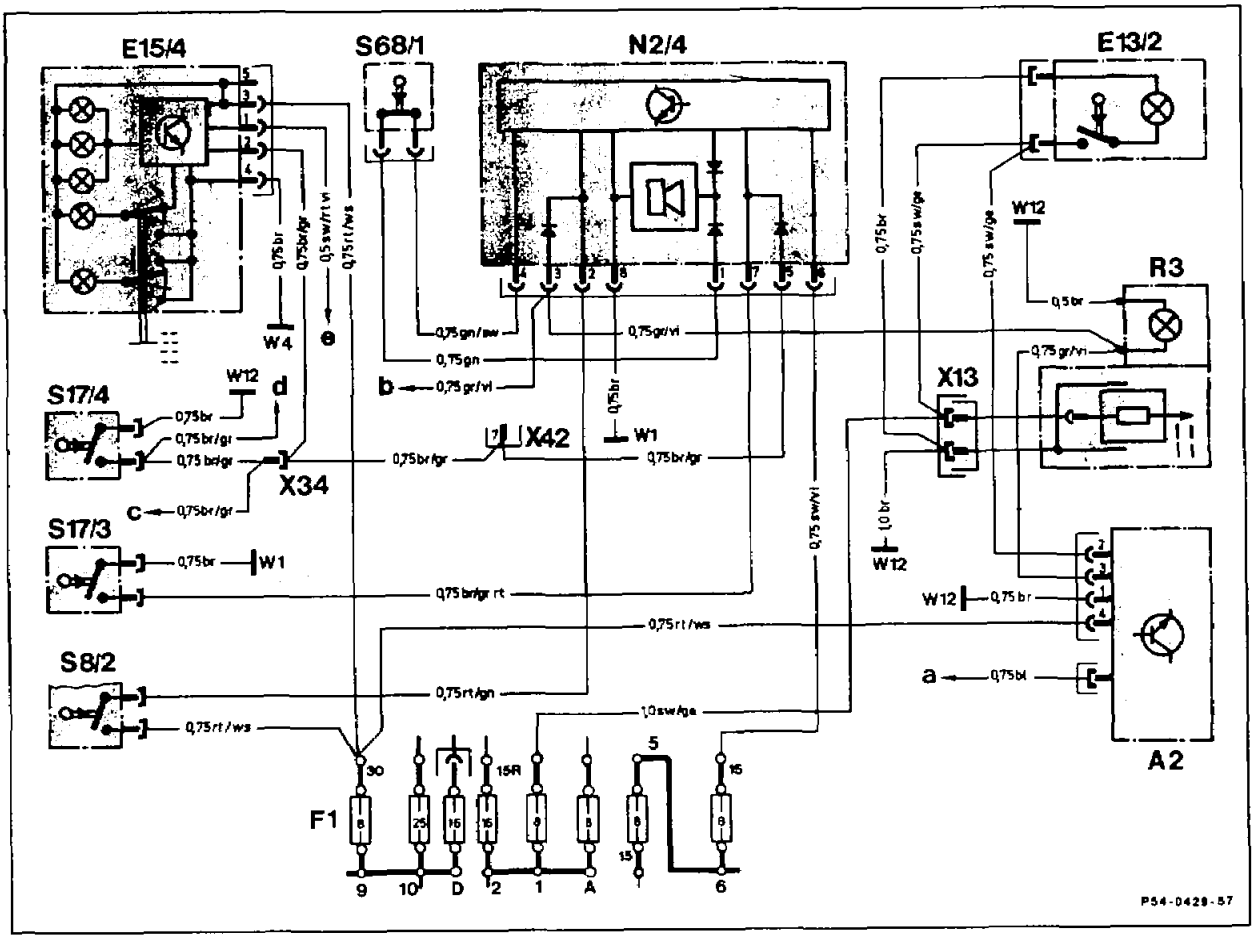

Wiring diagram of seat belt reminder with warning buzzer (USA)

A2	Radio	W12	Ground, center console
E13/2	Glovebox lamp with switch	X13	Plug connection, cigar lighter
E15/4	Dome lamp with reading lamp and seat belt reminder	X34	Intermediate plug connection, right front door contact switch
F1	Fuse and relay box	X42	Plug connection, front/rear anti-theft warning system
N2/4	Seat belt reminder control unit (USA)	a	To illuminated automatic antenna switch S61/1
R3	Cigar lighter with front ashtray illumination	b	To 15-pin instrument cluster connector, contact 13
S8/2	Warning buzzer contact lighting/central locking system	c	To front right entrance/exit lamp E17/4
S17/3	Left front door contact switch	d	To front left entrance/exit lamp E17/3
S17/4	Right front door contact switch	e	To terminal block X6, terminal 58d (2-pin)
S68/1	Driver seat belt buckle switch (seat belt reminder)		
W1	Main ground (behind instrument cluster)		
W4	Ground, front dome lamp		

The reminder device performs **3 functions:**

1 Reminder when seat belt not fastened.

2 Reminder when ignition key not removed.

3 Reminder when light not switched off.

Description of operation

1 If the driver does not fasten his seat belt when the ignition is switched on and the driver's door is closed (left door contact switch S17/3 open), the reminder buzzer sounds for 4–8 seconds. Positive voltage is applied by the electronics of the seat belt reminder control unit (USA) (N2/4) from terminal 4 through the closed seat belt switch (terminal 1 of control unit) to the warning buzzer in the control unit.

When the seat belt is fastened, the seat belt switch interrupts the circuit and the seat belt reminder buzzer is switched off.

Seat belt reminder lamp

A seat belt reminder lamp is installed as a reminder to fasten seat belts. It flashes irrespective of whether the seat belt is fastened. The seat belt reminder lamp is controlled by the door contact switches and the electronic time delay of the dome lamp. When the front door is open, the seat belt reminder lamp flashes constantly; if the dome lamp switch is in position "0", the seat belt reminder lamp flashes only if the ignition is switched on (key in position 2).

When the front door is closed, the seat belt reminder lamp flashes for 12 ± 1 seconds. This time is reduced to 6 ± 1 seconds if the ignition is switched (key in position 2). If the ignition is switched on again after this time (key in position 2), the seat belt reminder lamp flashes once again for 6 ± 1 seconds.

2 If the driver's door is opened (left door contact switch S17/3 closed), and the ignition key is not withdrawn, the electronic control applies a positive voltage through the closed warning buzzer contact at the ignition lock, terminal 2 at the control unit, to activate the reminder buzzer. The reminder buzzer is switched off by withdrawing the ignition key or after 4–8 seconds.

3 The reminder buzzer is likewise activated if high beam, low beam or parking light is left on when the ignition is switched off (key in position 0) and the driver's door is opened.

The reminder buzzer is activated by terminal K at the exterior light switch through contact 16 at the lamp monitoring unit to contact 13 of the 15-pin connector of the instrument cluster to terminal 3 of the seat belt reminder control unit. When the driver's door is opened, the electronic control applies a negative voltage through the left closed door contact switch (S17/3) to activate the reminder buzzer.

B. Function of seat belt and road speed warning control unit N2/3 (SA)

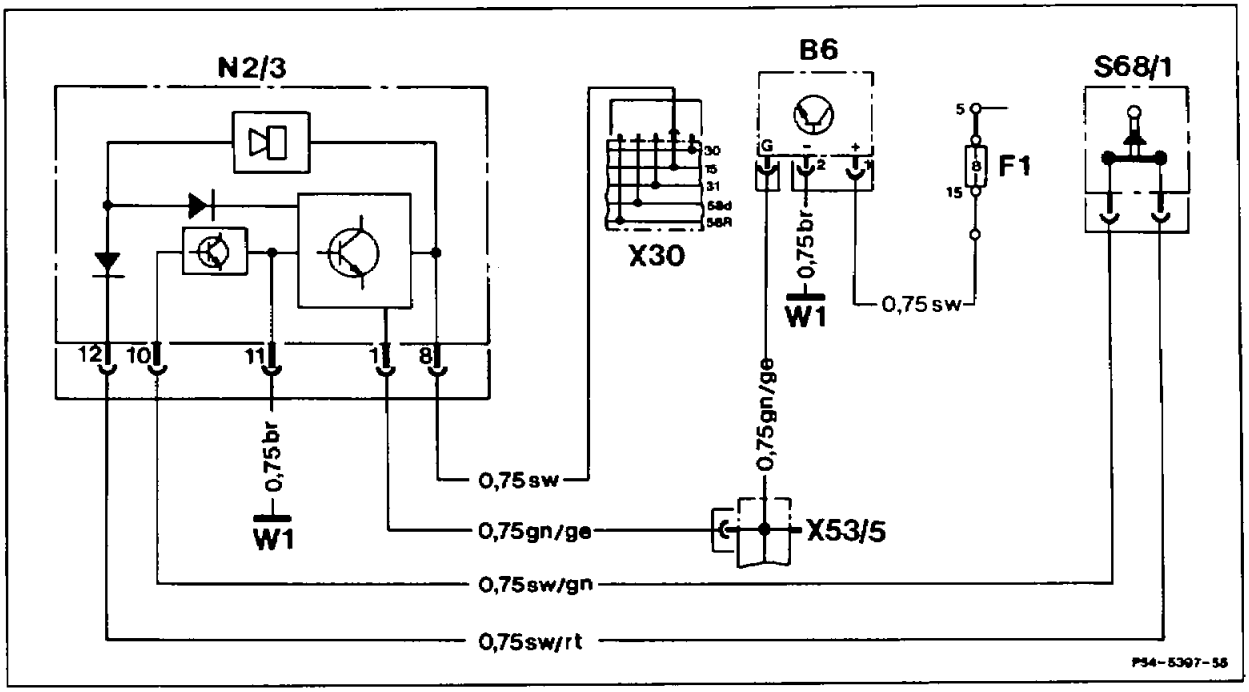

Wiring diagram of seat belt and road speed warning system

B6	Hall sensor, road speed	S68/1	Driver seat belt buckle switch (seat belt reminder)
F1	Fuse and relay box	W1	Main ground (behind instrument cluster)
N2/3	Seat belt and road speed warning system control unit	X30	Plug connection, optional equipment block
		X53/5	Multiple pin connection/Hall sensor

Road speed warning system	is controlled by the speedometer.
Warning buzzer	sounds as soon as road speed exceeds 120 km/h. This signal is maintained so long as the car is driven at a speed in excess of 120 km/h.
Seat belt reminder system	integrated in the same control unit (N2/3) as road speed warning system.
Warning buzzer	sounds for about 13 seconds if seat belt not fastened (key in position 2).
Seat belt	fastened, warning buzzer stops.

54–2800 Removing and installing combination switch

Preceding work:
Steering wheel removed (46–610).
Cover below instrument panel removed (68–150).

Operation no. of operation texts and work units or standard texts and flat rates:

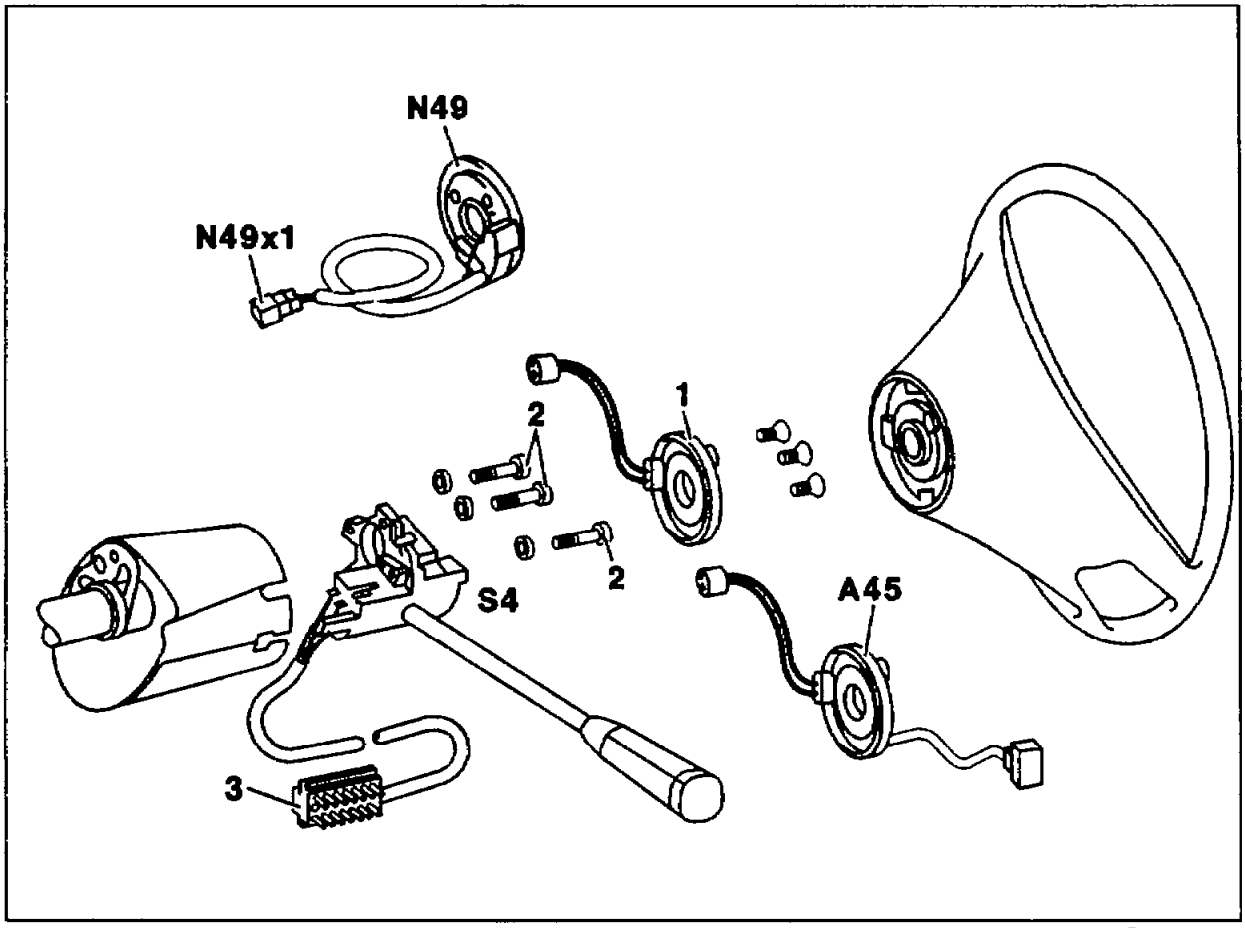

P54-6571-57

Battery ground cable	disconnect, reconnect.
Vehicles up to 05/93 with airbag	
Cover plate (1)	remove, install.
Vehicles with 4MATIC	
Steering angle sensor (N49)	remove, install; unplug connector (N49/1) for this step, plug in.

⚠

After connecting the power supply, the steering angle sensor (N49) has to be reactivated. With engine running, turn the steering once from full left to full right lock. The indicator light goes out.

Vehicles as of 06/93 with contact spiral

Contact spiral (A45)	remove, install (46–8300).

All vehicles

Phillips screws (2)	screw out, screw in.
14-pin plug (3) for combination switch (S4) below instrument panel	disconnect, reconnect.
Combination switch (S4)	remove from jacket tube panelling, reinstall.

54–3190 Removing and installing switches in center console

Operation no. of operation texts and work units or standard texts and flat rates:

A. Removing and installing top switches

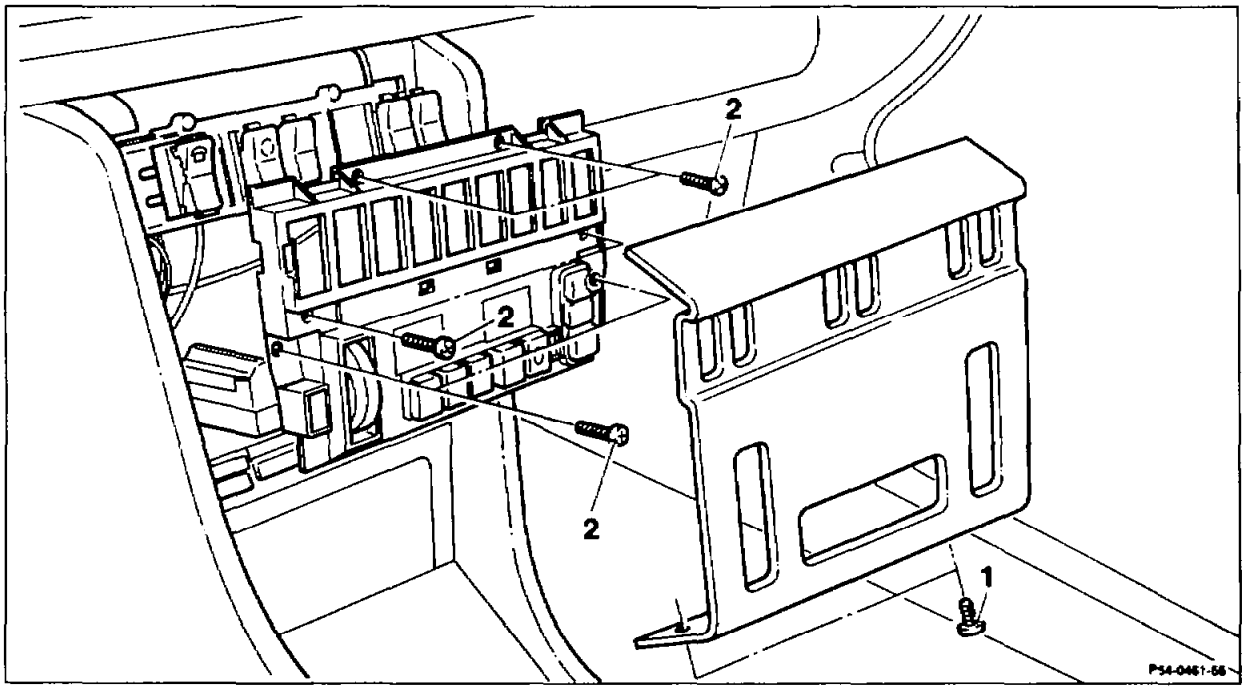

Screws (1)	unscrew, screw in.
On vehicles with automatic heater control or air conditioner	unplug the control switches for blower and air distribution, plug in.
Nuts located below	unscrew, screw on.
Wooden trim	take off, fit on.
Screws (2)	unscrew, screw in.
Switches	pull out, press in.

B. Removing and installing bottom switches

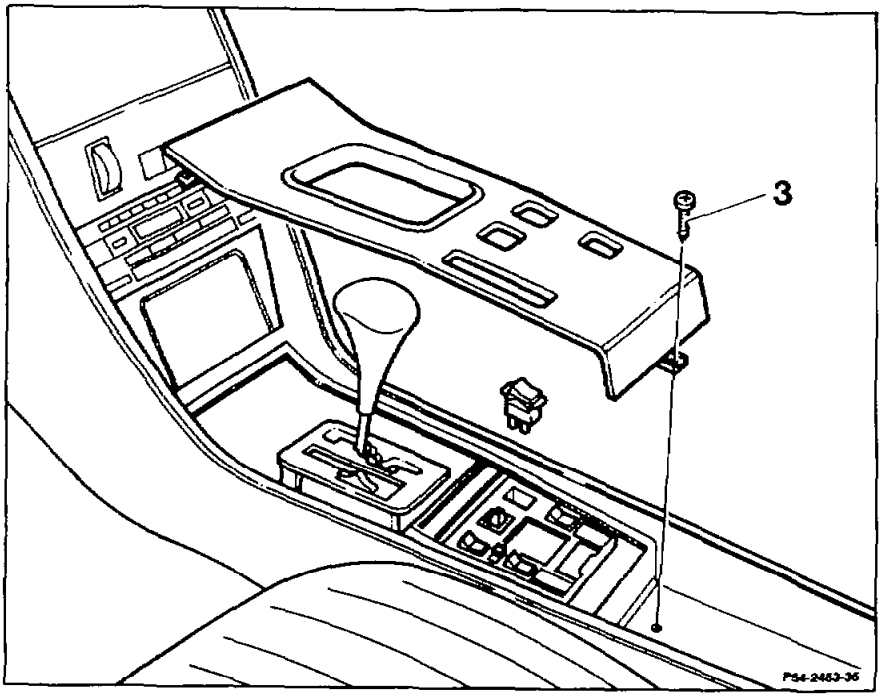

Screw (3)	unscrew, screw in.
Cover	pull out to the rear, insert.
Switches	pull out, press in.

Note
The couplings are clipped into place in the switch carriers.

54–3250 Removing and installing exterior light switch

Preceding work:
Cover below instrument panel removed (68–150).

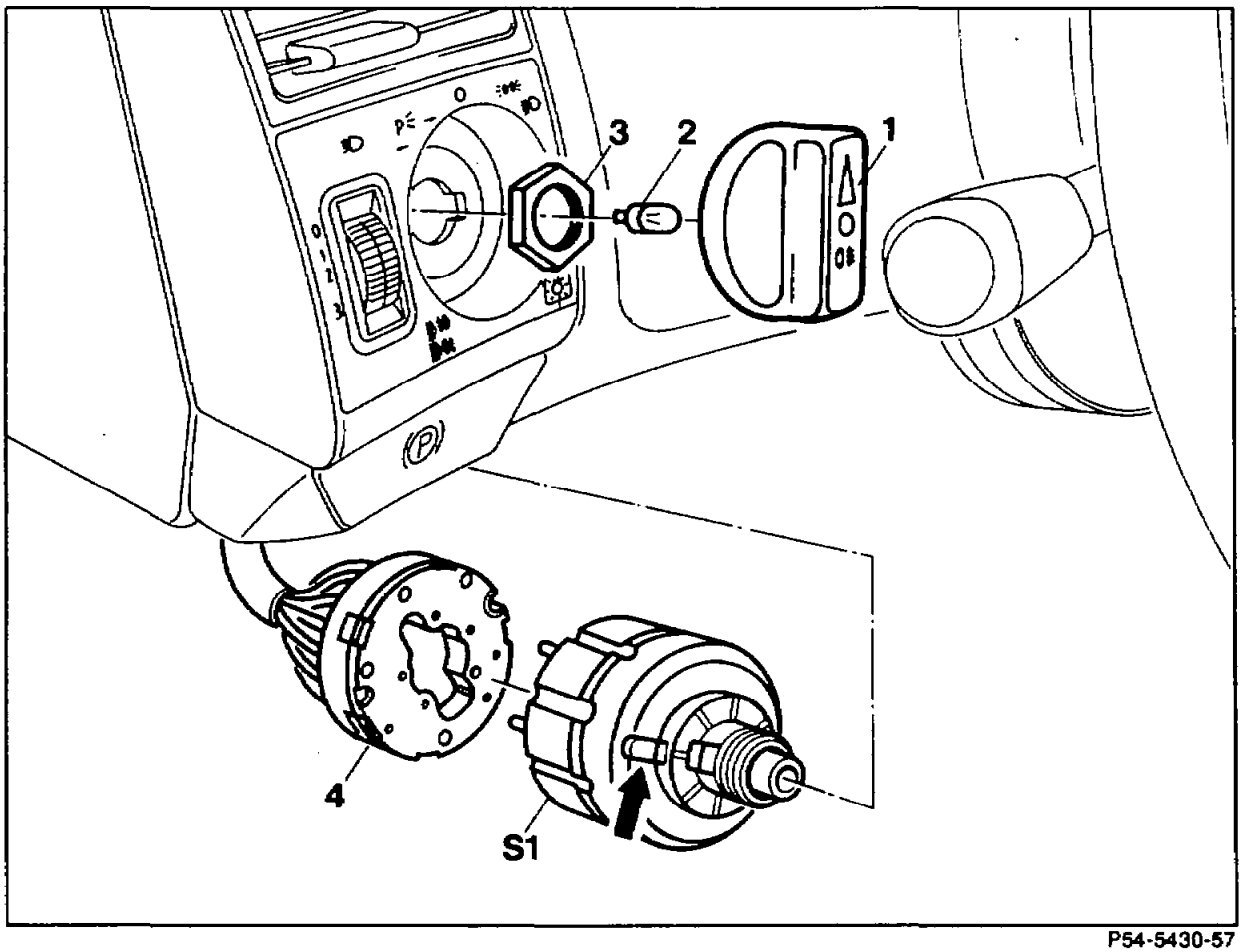

P54-5430-57

Ground cable at battery	disconnect, connect.
Exterior light switch operating knob (1)	pull off, fit on.
Bulb (2)	pull out, insert.
Nut (3)	unscrew, screw on.
Exterior light switch (S1)	turn to the left and take out to the rear, insert from the rear and turn to the right.
	Note Ensure the catches (arrow) on the exterior light switch (S1) are correctly located.
Electrical connection (4)	unplug, plug in.

Operation no. of operation texts and work units or standard texts and flat rates:

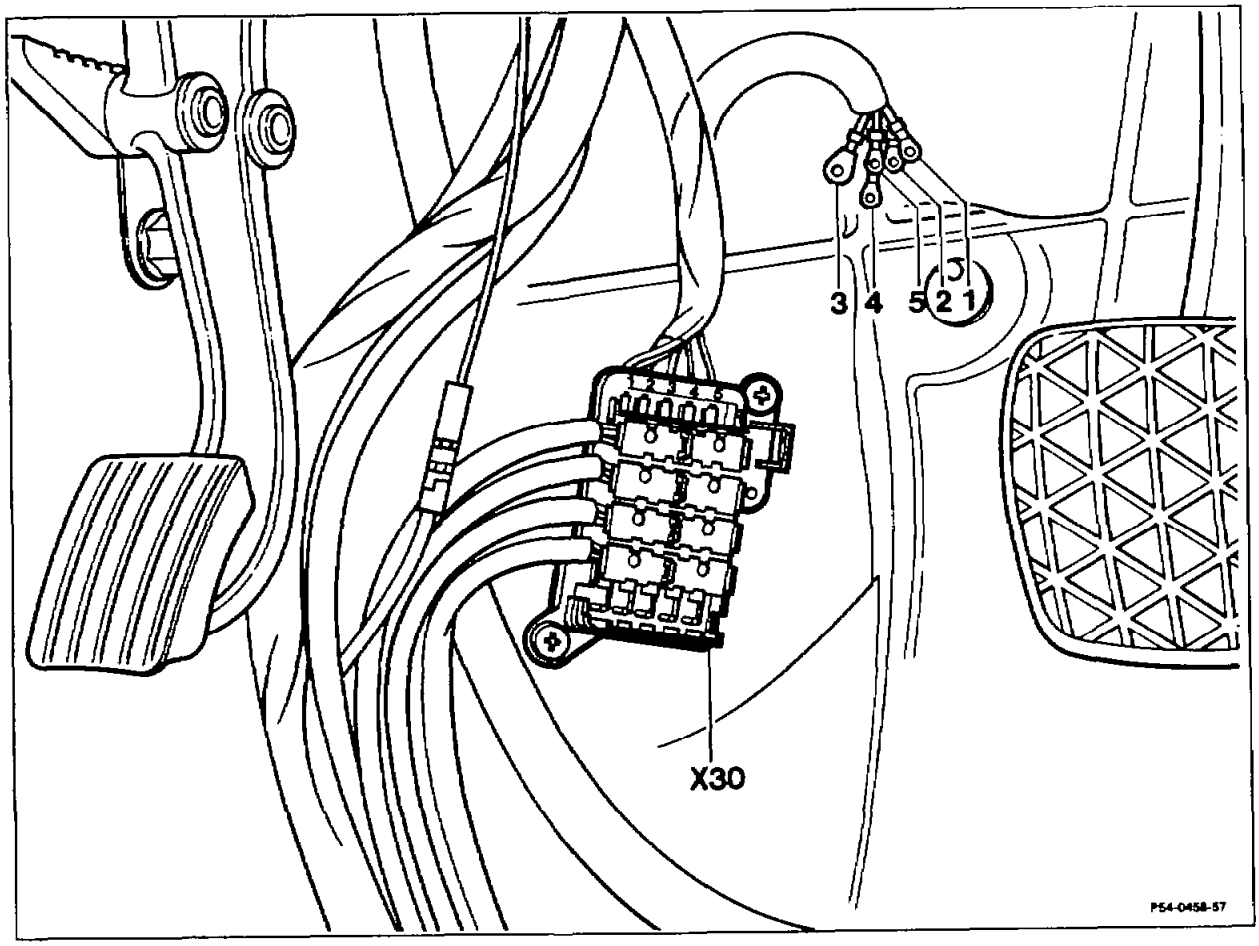

Arrangement of plug connection of optional equipment block (X30) in front left footwell.

Contact assignment table of terminal strip

Connection	Terminal		Colour code
1	30	To fuse C	red/white
2	15	To fuse B	black/red
3	31	Main ground W1	brown
4	58d	Terminal block X6 at heater box behind radio	grey/blue
5	15R	To fuse A	black/yellow

Assignment table of couplings

Optional equipment	Assignment of coupling with connection no.
Automatic antenna as of 1990	1
Anti-theft warning system (ATA)	1, 2, 3
Entrance/exit lamp	1, 3
Radio electronics [1])	1, 3, 4, 5
Seat belt reminder (J) Cabriolet	2
Tilting/sliding roof convenience control (USA)	5
Convenience control power windows/sliding roof	1, 3, 5
Head restraint release with time delay	5
Sliding roof, model 124.026/051 (USA)	1, 4, 5
Tailgate closing aid (USA) as of 1990	1
Front heated seats as of 1990	4, 5
Front left and right heated seats	3, 4, 5
Front left and right heated seats (USA)	4, 5
Heated seats with memory (USA) up to 06/90	1
Seat adjustment with/without steering column adjustment, model 124.026/051 (USA)	4
Sunblind except (USA)	3, 4, 5
Heated mirrors	2, 3
Mirror adjustment in combination with sunblind, model 124.026 (USA)	2, 3, 4, 5
Left mirror adjustment, model 124.030/034/036/051 (USA)	2, 3
Right mirror adjustment	2, 3, 4
Right mirror adjustment, model 124.026/030/090	2, 3
Anti-theft warning system (ATA) control unit, model 124.030 (USA)	2
ATA control unit Cabriolet	1, 5
Seat belt extender control unit	2
Seat belt extender control unit Cabriolet	2
Retractable rear head restraints	3, 4, 5
Supply pump 2, central locking system (USA)	5
Rear screen washer (USA) as of 1990	5
Tailgate wiper motor (USA) as of 1990	5
Coupé central locking system	3, 5
Sedan central locking system	1, 3, 5
Central locking system with orthopedic backrest	5
Central locking system with orthopedic backrest, model 124.026/034/036 (USA)	1, 3, 5
Central locking system, model 126.026 (USA)	1, 3

[1]) Only on vehicles up to 08/85 without radio preinstallation.

Note

The couplings for optional equipment can be plugged in in any desired order.

54–5245 Removing and installing clock/tachometer

Preceding work:
Instrument cluster removed (54–6015).
Speedometer removed (54–5320).

Operation no. of operation texts and work units or standard texts and flat rates:

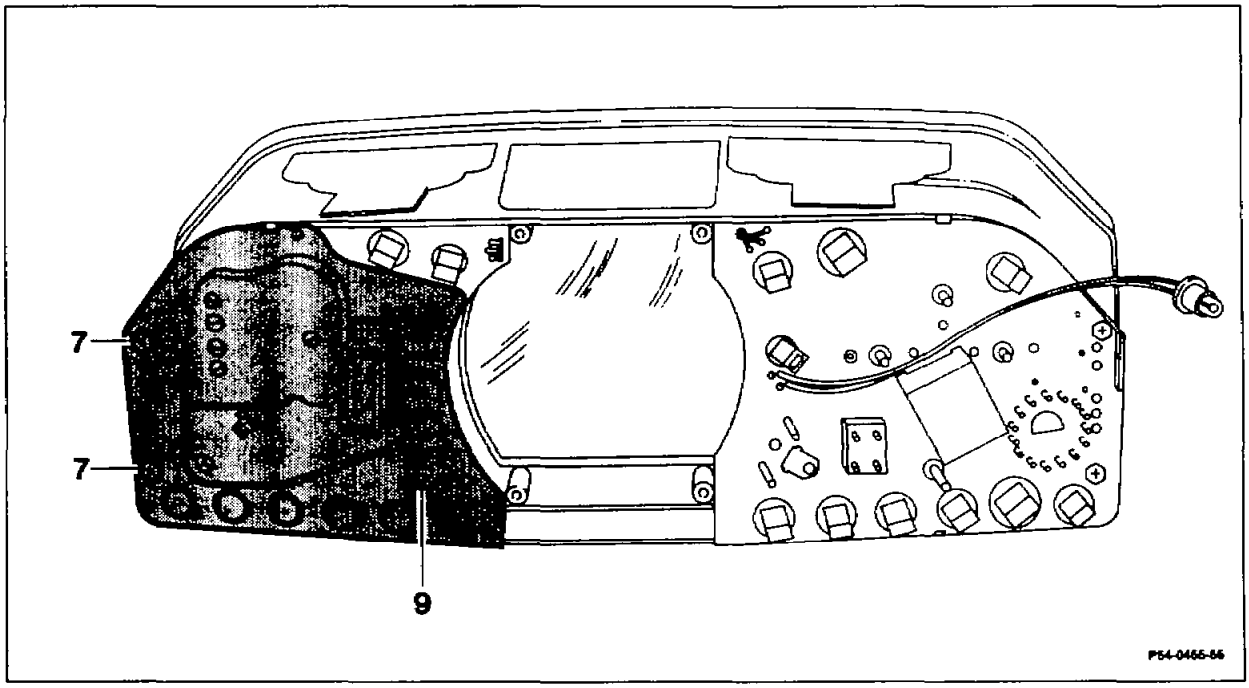

Screws (7)	remove, insert.
Clock/tachometer (9)	take out, insert.

54–5320 Removing and installing speedometer

Preceding work:
Instrument cluster removed (54–6015)

Operation no. of operation texts and work units or standard texts and flat rates:

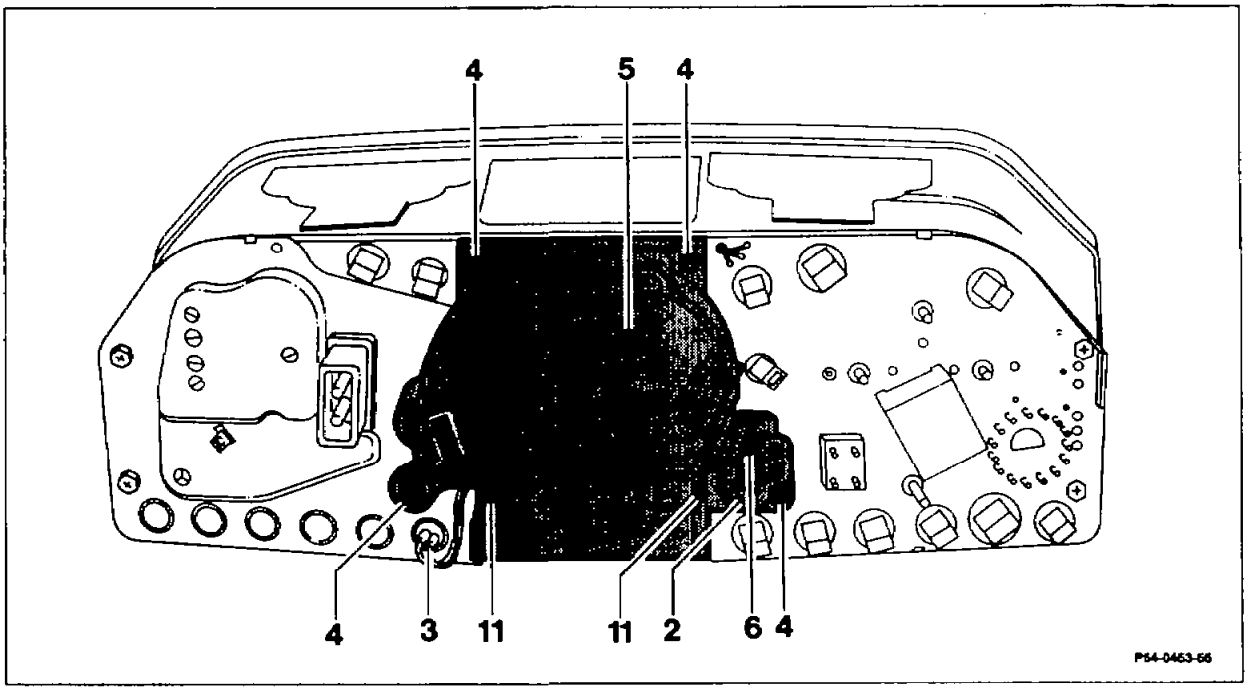

Phillips screw (6)	unscrew, screw in.
Rheostat (2)	remove, install.
Indicator lamp (3) of windshield washer fluid level	remove, insert.
Cable (arrow)	unclip, clip into place.
Phillips screws (4)	unscrew, screw in.

Vehicles with outside temperature display

Phillips screws (11)	unscrew, screw in.
Speedometer (5)	take out, insert.

Note

1 The version up to 09/85 indicator lamp (3) for windshield washer fluid level in 2nd field.

2 Version as of 10/85 indicator lamp (3) for windshield washer fluid level in 1st field.

54–5600 Removing and installing speedometer shaft (except model 124.034/036)

Preceding work (except models 124.034/036):
Instrument cluster removed (54–6015).

Operation no. of operation texts and work units or standard texts and flat rates:

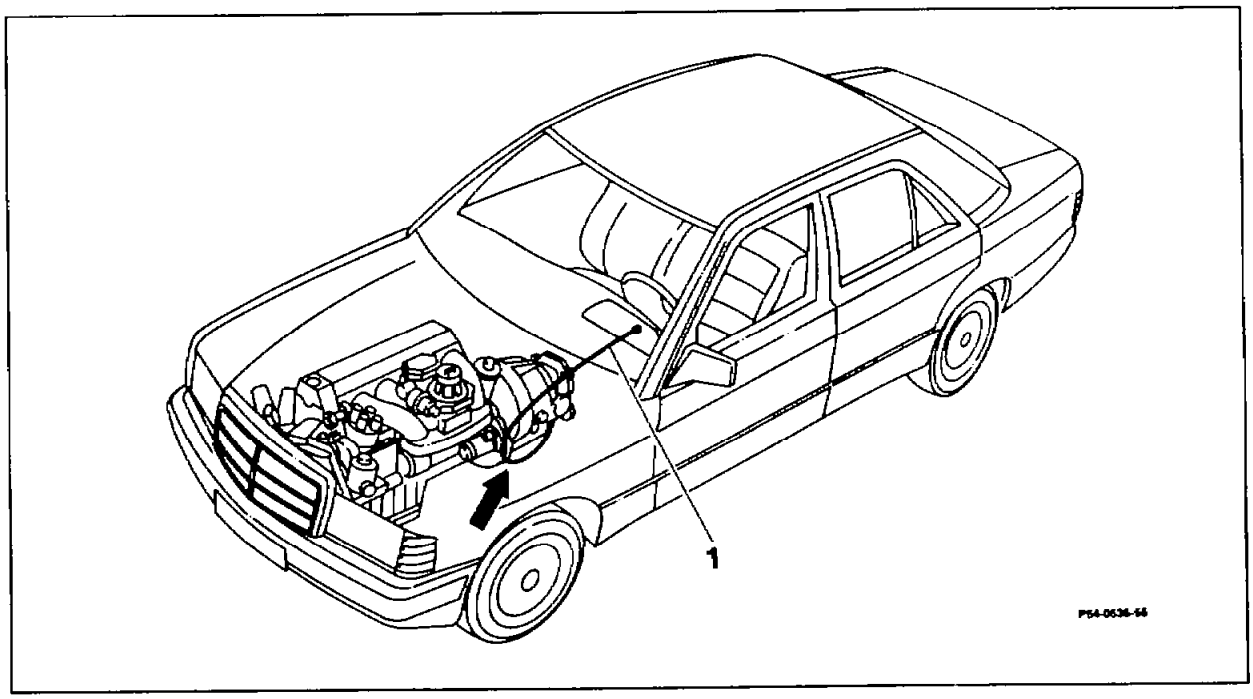

Speedometer shaft (1) at holder (arrow)	unclip, clip in.
Carpet in left footwell	remove, insert.
Speedometer shaft (1) from interior	push through downward, introduce from below.

Note

The speedometer shaft (1) must not be kinked or tensioned.

A guide tube has been installed as of 03/87 in the area below the instrument cluster as an anti-kink protection to facilitate removal and installation.

54–6015 Removing and installing instrument cluster

Preceding work:
Engine compartment panel removed (61–105).
Noise encapsulation removed (94–050).

Operation no. of operation texts and work units or standard texts and flat rates:

A. Removal, installation

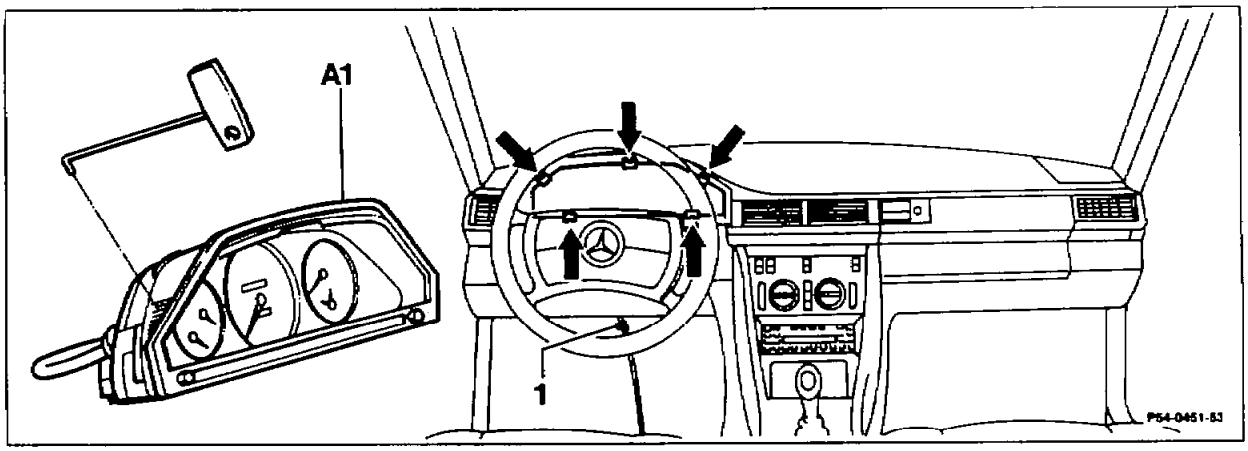

Ground cable at battery	disconnect, connect.
Speedometer shaft at transmission	detach, attach (except models 124.034/036).
	Note This must be done without fail before removing the instrument cluster. Also even if instrument cluster is only withdrawn halfway, e. g. for replacing bulb. The speedometer shaft must not be kinked or tensioned.
Speedometer shaft (1)	unclip at front cover over pedals from retaining clip (1), clip into place (except models 124.034/036).
	⚠ Protect steering column trim from damage, e. g. by using a cloth.

Instrument cluster (A1)	pull out with withdrawing hook 140 589 02 33 00. Carefully insert withdrawing hook with the curved face downward to the side between instrument cluster and instrument panel and turn through 90°. Carefully withdraw hook until it engages on the recess on the instrument cluster. The instrument cluster is held in place by five spring clips attached to the instrument panel (arrows).
Speedometer shaft at instrument cluster (A1) . . .	unscrew, screw on (except models 124.034/036).
Electrical connections	disconnect, connect.
Instrument cluster (A1)	remove, insert.

⚠

Up to 02/87

Push in instrument cluster and at the same time pull speedometer shaft from footwell so that the shaft does not kink behind the instrument cluster.

As of 03/87 a guide tube has been installed in the area below the instrument cluster to prevent the speedometer shaft from kinking.

Special tool

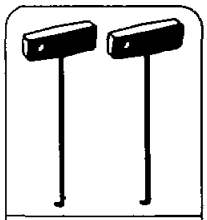

140 589 02 33 00
54

B. Assignment of 15-pin couplings of instrument cluster

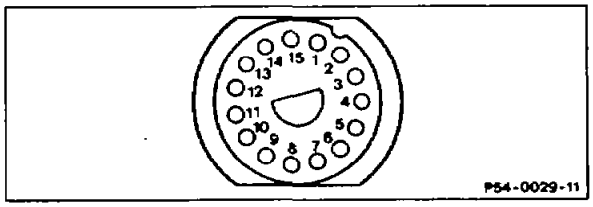

Assignment of 15-pin coupling (half-round shape to prevent incorrect connection)

No.	Designation	Cable cross-section	Colour code
1	Ground W1	0.5	brown
2	Coolant temperature sensor	0.5	green
3	Fuel gauge sensor	0.5	blue/black
4	Fuel reserve gauge sensor	0.5	blue/green
5	Oil level indicator switch	0.5	brown/black
6	Fuse 5 terminal 15	0.75	black/red violet
7	Main beam indicator lamp	0.5	white
8	Fuse 6 terminal 15 unfused	0.5	pink/red
9	Charge indicator lamp terminal 61	0.5	blue
10	Left front brake pad wear indicator contact sensor	0.5	brown/red
10	Right front brake pad wear indicator contact sensor	0.5	brown/red
10	Rear brake pad wear indicator contact sensor (only with ASR)	0.75	brown/red
11	Brake fluid level indicator switch	0.5	brown/white
12	Coolant level indicator switch	0.5	brown/yellow
13	Lamp failure monitoring unit terminal K	0.5	grey/violet
13	Ashtray illumination	0.5	grey/violet
14	Left turnsignal indicator lamp	0.5	black/white
15	Right turnsignal indicator lamp	0.5	black/green

C. Assignment of 4-pin coupling of instrument cluster

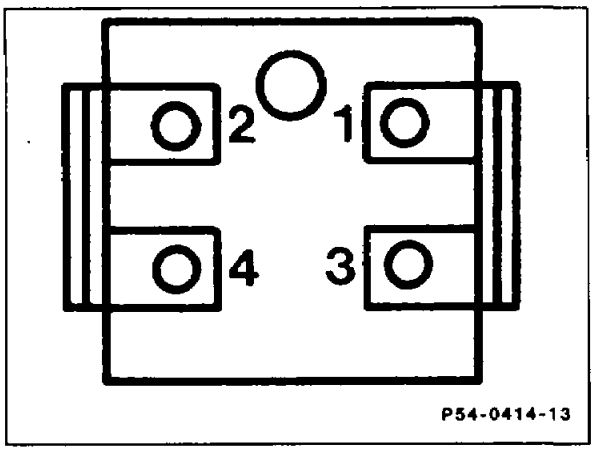

No.	Designation	Cable cross-section	Colour code
1	Windshield washer system level indicator switch	0.75	brown/blue
2	Terminal block terminal 58d	0.75	grey/blue
3	Warning buzzer contact (USA not assigned)	0.75	brown/yellow
4	Oil pressure gauge sensor	0.75	brown/green

54–6070 Testing operation of exterior lamp failure indicator

Operation no. of operation texts and work units or standard texts and flat rates:

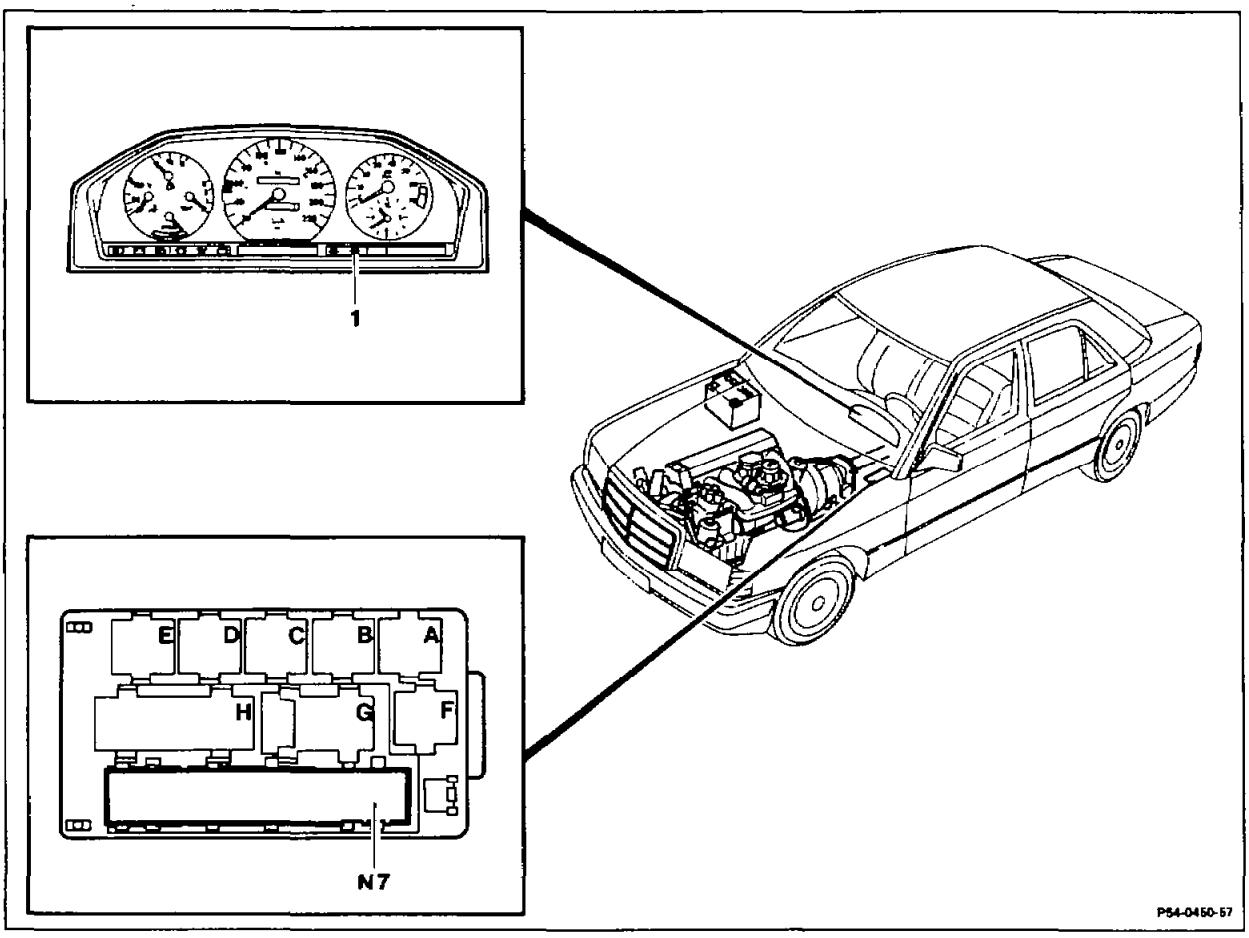

N7 Exterior lamp failure monitoring unit

1 Exterior lamp failure indicator as of 10/85 in 2nd field

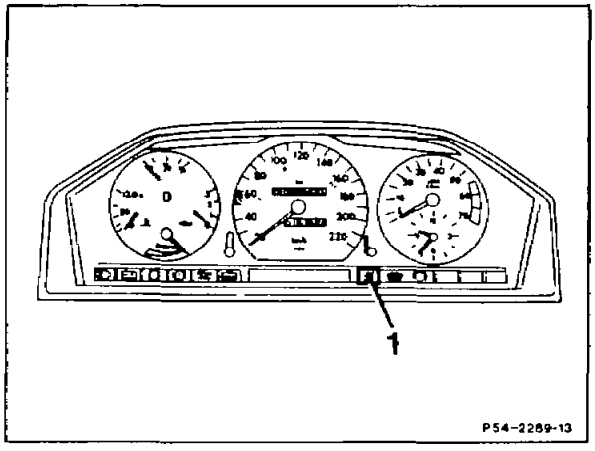

1 Exterior lamp failure indicator up to 09/85 in 1st field

The following functions of the exterior lighting are monitored by the lamp failure monitoring unit in the relay box and, if a lamp fails, indicated by the exterior lamp failure indicator in the instrument cluster lighting up:

Low beam, high beam, fog, parking, tail, licence plate, stop, turnsignal, rear fog and reversing light.

If a bulb fails in one of these circuits, the exterior lamp failure indicator signals the fault for as long as this light remains switched on.

The stop light and turnsignal light have a fault storage facility; this means that if a bulb in one of these circuits fails, the exterior lamp failure indicator remains on until the key is turned back in the steering lock to "1" or "0".

To detect the fault, start the engine and switch on the turnsignal or stop light.

As several lamps are activated when the lighting is switched on, it is necessary to perform a visual check to determine where the fault is located.

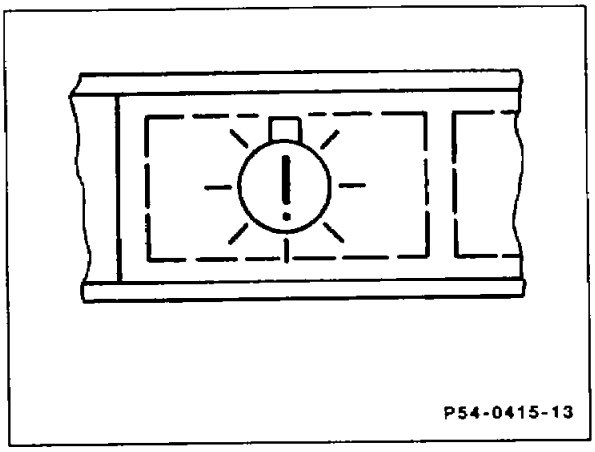

Note
The indicator lamp lights up with reduced intensity in key position "2" as a self-check and goes out when the engine is running.

If additional lights, e. g. auxiliary headlamps, additional stop lamps, trailer hitch etc., are retrofitted, the lights must be connected to the fuse (ahead of the lamp failure monitoring unit).

The lights should be connected ahead of the lamp failure monitoring unit otherwise the exterior lamp failure indicator will not operate properly or the lamp failure monitoring unit will be damaged.

Function check of exterior lamp failure indicator on vehicles with trailer hitch

Note
Since 08/86 no additional turnsignal indicator lamp is fitted in the instrument cluster on vehicles with the optional trailer hitch.

The combination relay (turnsignals with trailer hitch, heated rear screen, wiper motor) N10/2 is switched over to trailer mode by a signal from the trailer detection control unit N28/1. This detects the trailer mode by performing an electrical measurement through the stop lamps of the trailer.

A faulty turnsignal bulb at the trailer is indicated by the turnsignal indicator lamp flashing more rapidly. At the same time the exterior lamp failure indicator lights up.

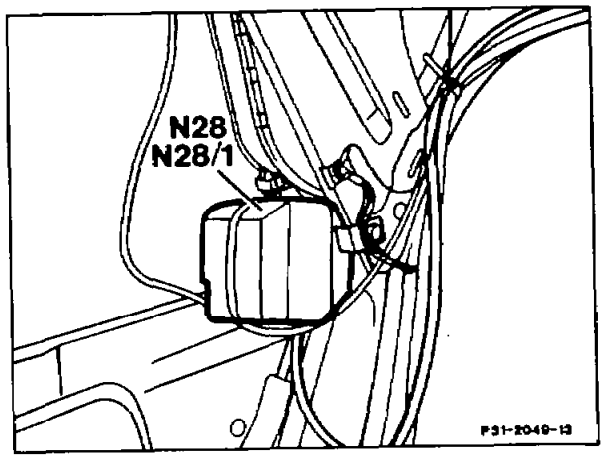

1 To simulate trailer operation, connect a 12 V 21 W bulb to terminal 54 (stop light) and to terminal 31 (ground) of the trailer socket.

2 Turn key to position "2" (ignition on).

3 Switch on turnsignal lamp. The flashing frequency is faster than normal and the exterior lamp failure indicator **lights up.**

54–6112 Removing and installing gauges

Preceding work:
Instrument cluster removed (54–6015).
Speedometer removed (54–5320).

Operation no. of operation texts and work units or standard texts and flat rates:

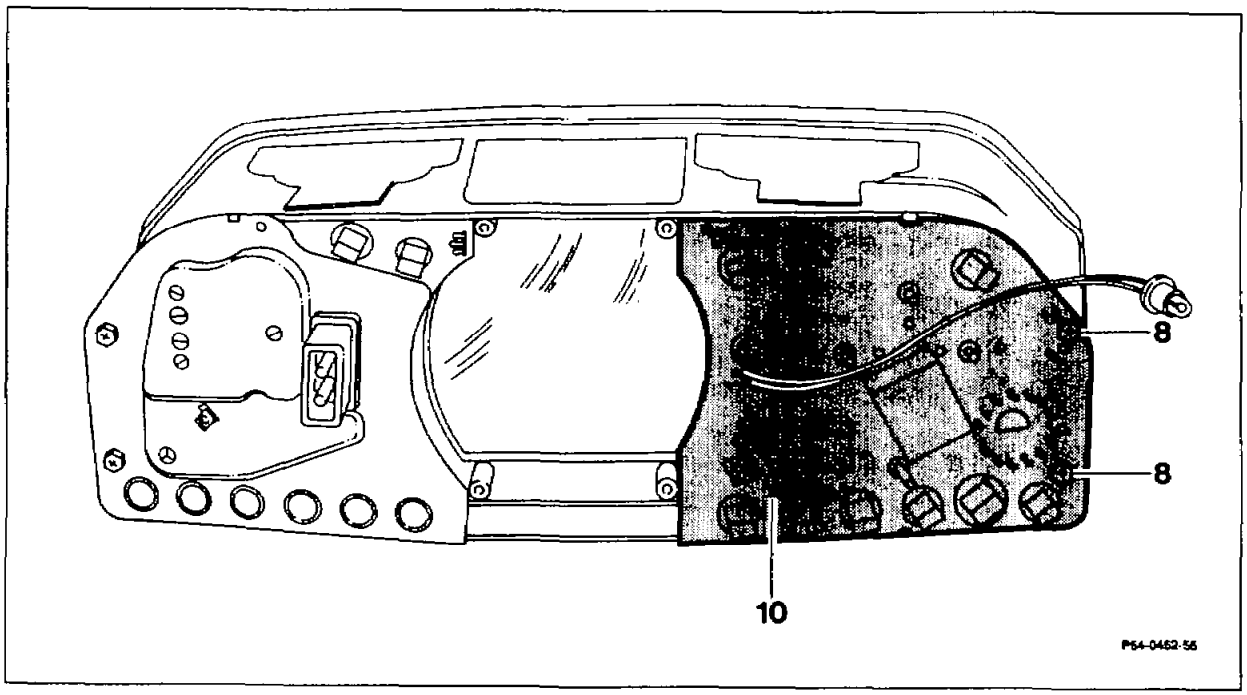

Screws (8)	unscrew, screw in.
Gauges (10)	remove, insert.

Note
The gauges (10) for coolant temperature, fuel supply, oil pressure, warning buzzer, Economy (Economy up to 06/90) can only be replaced complete.

Repair note
If the new instrument cluster assembly is installed on vehicles manufactured prior to 05/87 with ASD and 4MATIC, the speedometer can no longer be screwed on. For this reason, approx. 15 mm must be sawn off the speedometer housing in the area of the printed conductor catch (arrow). After performing this work, thoroughly clean cover.

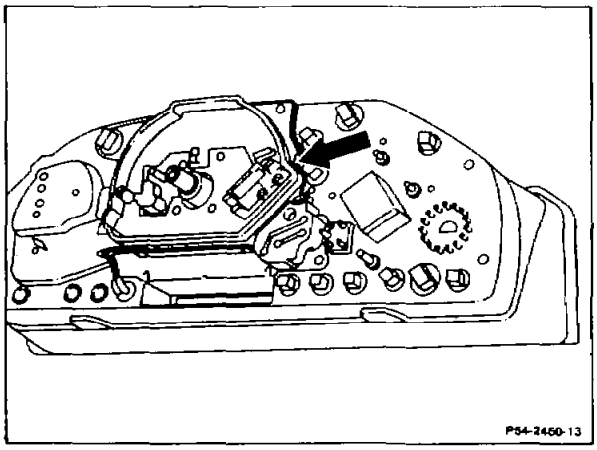

54–6075 Removing and installing exterior lamp failure monitoring unit

Operation no. of operation texts and work units or standard texts and flat rates:

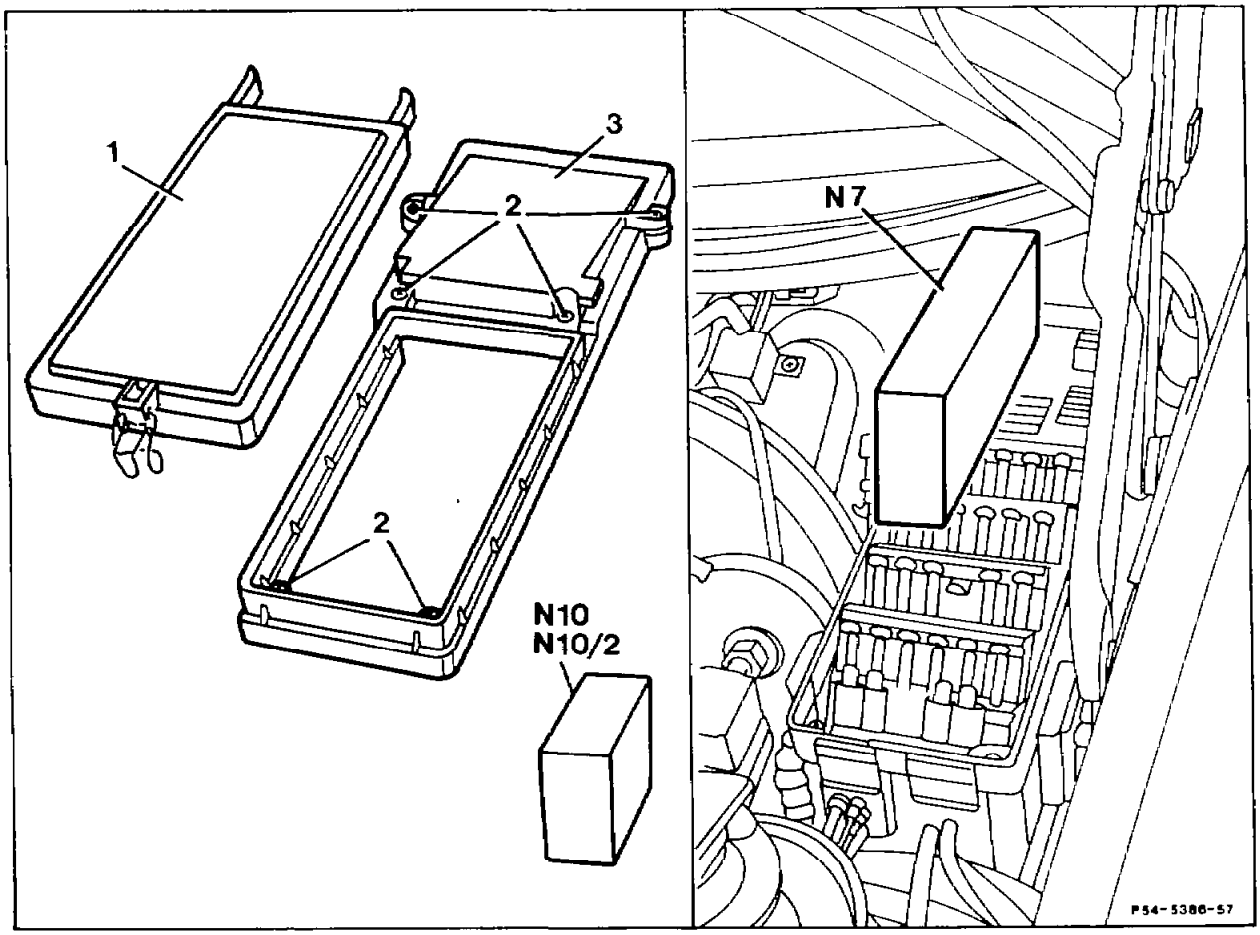

Catch	open, close.
Cover of fuse box (1)	take off, fit on.
Screws (2)	unscrew, screw in.
Cover of relay box (3)	take off, fit on.
Combination relays (N10, N10/2)	take out, insert.
Lamp failure monitoring unit (N7)	remove, unplug both couplings on outside, plug in and insert.

54–6114 Removing and installing function display (ASD, ASR and 4MATIC)

Preceding work:
Instrument cluster removed (54–6015).
Speedometer removed (54–5320).

Operation no. of operation texts and work units or standard texts and flat rates:

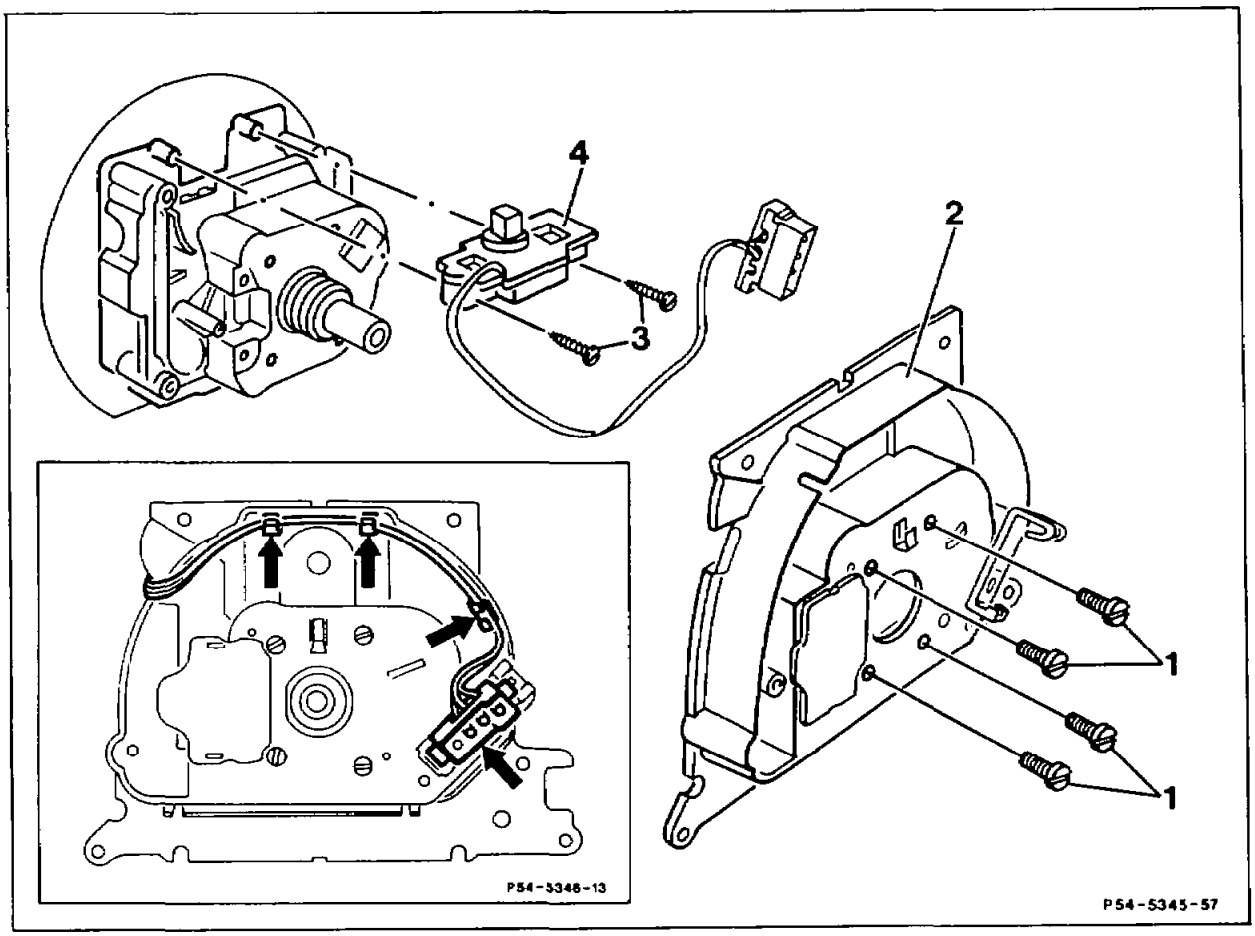

Coupling with cable (arrows)	unclip, clip into place.
Screws (1)	unscrew, screw in.
Housing (2)	take off, insert.
Screws (3)	unscrew, screw in.
Function display (4)	take out, insert.

54–6320 Testing electrical outside temperature display

Preceding work:
Instrument cluster removed (54–6015).

Operation no. of operation texts and work units or standard texts and flat rates:

A. Test

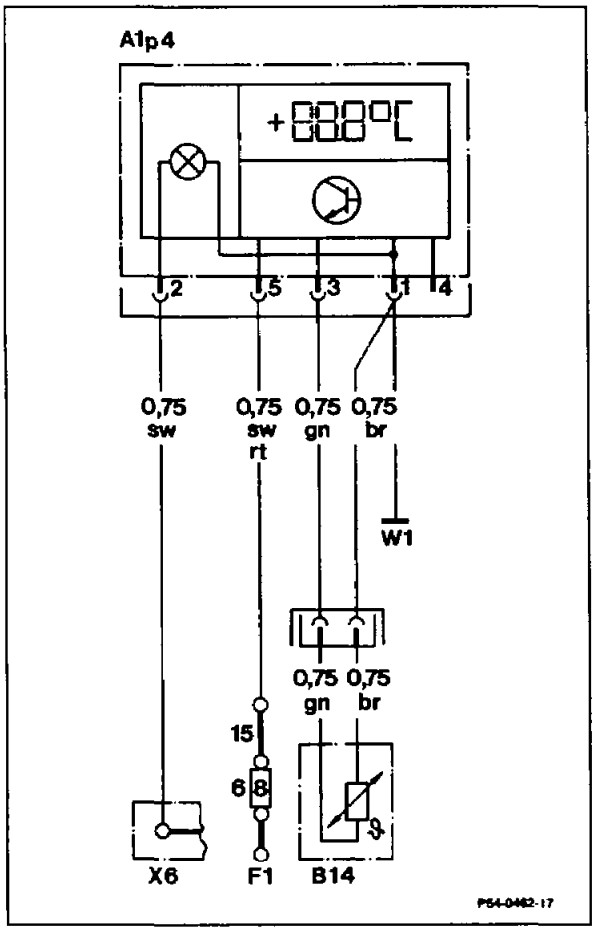

Wir. diagr. of outside temp. display up to 08/87

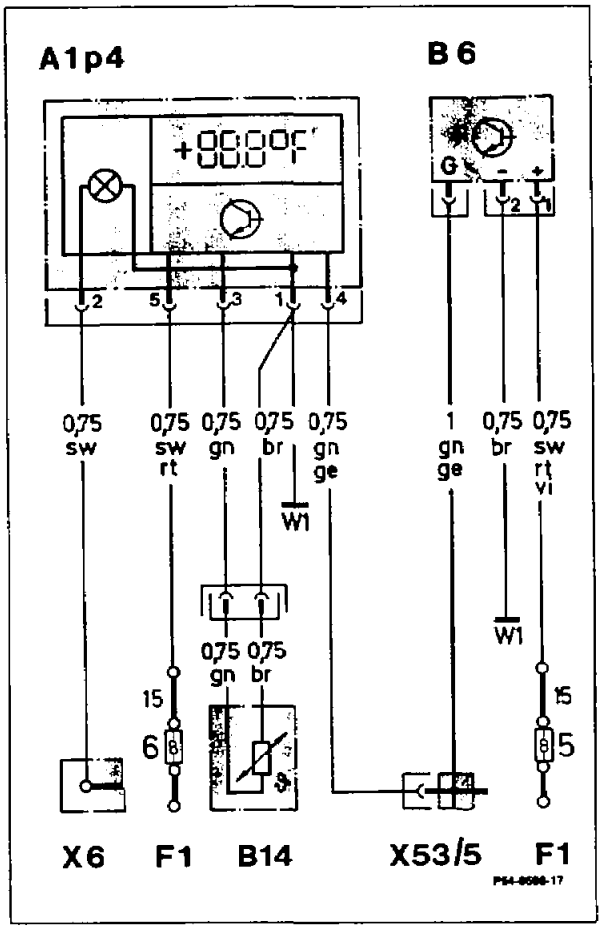

Wir. diagr. of outside temp. display as of 09/87

A1p4	Outside temperature display
B14	Temperature sensor, outside temperature display
F1	Fuse and relay box
W1	Main ground (behind instrument cluster)
X6	Terminal block, terminal 58d

A1p4	Outside temperature display
B6	Hall road speed sensor
B14	Temperature sensor, outside temperature display
F1	Fuse and relay box
W1	Main ground (behind instrument cluster)
X6	Terminal block, terminal 58d
X53/5	Multiple pin connection/Hall sensor

Voltage at 5-pin coupling of outside temperature display (A1p4) . . . . . test between contact 5 (terminal 15) and contact 1 (ground).
Key in position "2". Specification: battery voltage.

Lighting at 5-pin coupling for outside temperature display (A1p4) . . . . . test between contact 1 (ground) and contact 2 (instrument lighting). Lighting switched on. The voltage measured is dependent on the position of the rheostat (A1r1) of the instrument lighting.

If the specifications are not achieved, ... check contacts and wiring for open circuit.
Main ground behind instrument cluster (W1), fuse and relay box (F1) and terminal block, terminal 58d (X6) to plug connection, outside temperature display.

Temperature sensor, outside temperature display (B14) . . . . . test.

°C	Resistance (ohms)
± 0	9800 ± 100
+ 20	3750 ± 70
+ 40	1600 ± 40

Outside temperature display (A1p4) . . . . . test. Feed in resistances with ohms decade at 2-pin coupling.

Resistance	Readout
53100 Ω	–30 °C ± 2 °C
9800 Ω	0 °C ± 0.5 °C
1080 Ω	+50 °C ± 5 °C

Note
Measuring range –38 °C to +58 °C (Readout at intervals of 0.5 °C).

B. Function

Up to 08/87, the outside temperature display is supplied direct by the temperature sensor.

As of 09/87, the outside temperature display analyzes the road speed signal from the Hall sensor.

When the engine is started, the temperature measured is displayed. The memory is activated if, after starting the engine, the vehicle has been driven no faster than 20 km/h.

As the temperature drops, the readout always appears **immediately** no matter the speed.

At speeds below approx. 20 km/h the temperature last measured is stored and displayed.
If the temperature rises, the stored temperature is displayed in order to avoid any incorrect measurement. This prevents an incorrect temperature being displayed when driving slowly or when the car is stopped and the temperature sensor is heated up e. g. as a result of exhaust gases from the vehicle in front or from heat radiated by the radiator.

At speeds between approx. 20–60 km/h the temperature displayed changes after about 5 minutes in line with the temperature measured. The change in the readout is open from approx. 60 km/h.

Note

Only display units with 5-pin connector (with road speed signal) are stocked as replacement parts. If these display instruments are installed in vehicles manufactured up to an including model year 1987, the coupling at the connection cable should also be replaced by the coupling supplied.

Special tools

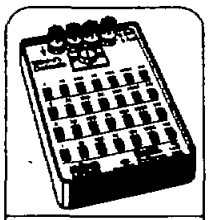

124 589 09 63 00
15 54

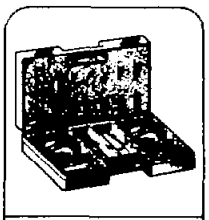

201 589 00 99 00
15 54

Commercially available tester

Multimeter	e. g.	Sun, DMM–5 or Avometer 2001

54–6341 Removing and installing temperature sensor of outside temperature display

Preceding work:
Engine compartment panel removed (61–105).
Fuse and relay box removed (54–1255).
Left headlamp unit removed (82–4730).

Operation no. of operation texts and work units or standard texts and flat rates:

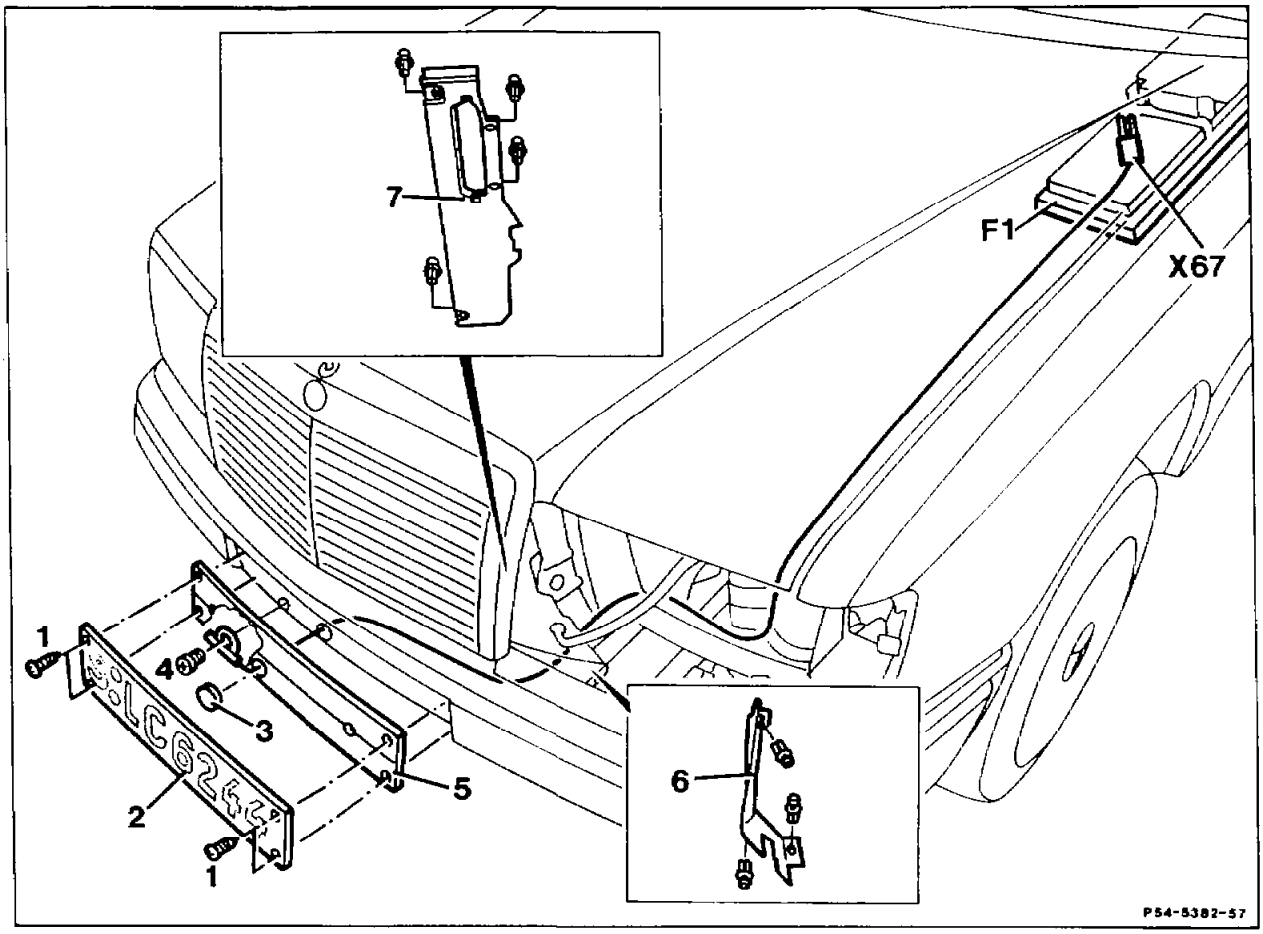

Screws (1)	unscrew, screw in.
Licence plate (2)	take off, fit on.
Rubber grommet (3)	take off, insert.
Screw (4)	unscrew, screw in.
Cover plate (5)	take off, fit on.
Only vehicles with transmission oil cooler	
Cover (6)	take off, fit on.
Cover (7)	take off, fit on.
All vehicles	
Plug connection, outside temperature display, 2-pin (X67)	unplug, plug together.
Connector of plug connection, outside temperature display, 2-pin (X67)	disassemble, assemble.
Cable of temperature sensor	expose and take out, insert and attach.

54-6940 Function of electronic brightness control of instrument lighting

Operation no. of operation texts and work units or standard texts and flat rates:

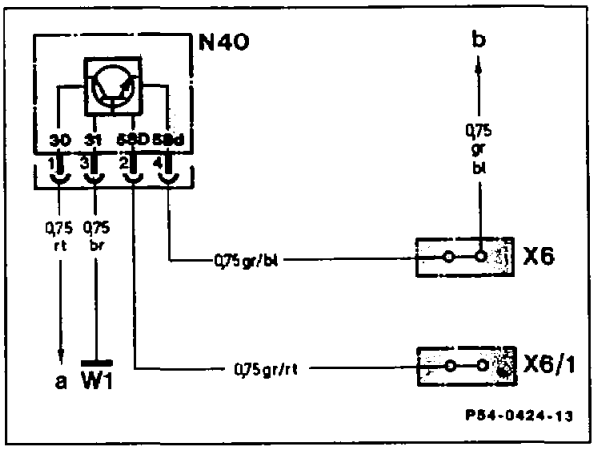

Wiring diagram
Electronic brightness control of instrument lighting

N40	Amplifier control unit 58D	a	To fuse 9, terminal 30
W1	Main ground (behind instrument cluster)	b	To 4-pin coupling, contact 2, instrument cluster (terminal 58d)
X6	Terminal block, terminal 58d		
X6/1	Terminal block, terminal 58D, 1- or 2-pin		

Note

The voltage supplied through the rheostat for the brightness control in the instrument cluster (terminal 58d) is no longer adequate if power windows, trip computer, heated seats and/or auxiliary heater are fitted, and is supplemented by an electronic circuit (terminal 58D).

As of 05/87 an additional fuse for the instrument lighting, terminal 58d is installed in the instrument cluster. This fuse is designed as a printed conductor protection and is located in the instrument cluster assembly in a bulb base (arrow).

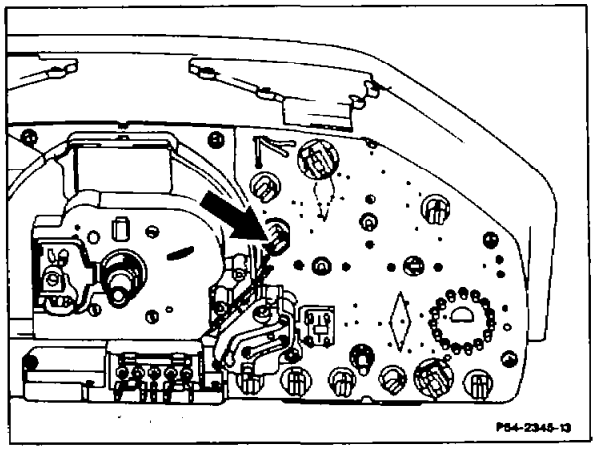

This base is coloured red as an identification and must be replaced complete when required.

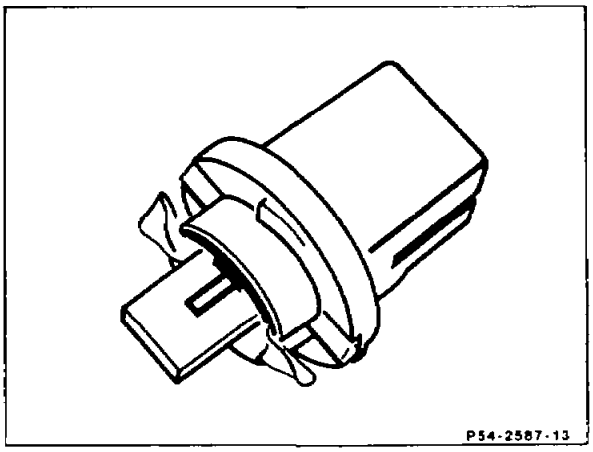

All models

- Fuel filler well drain

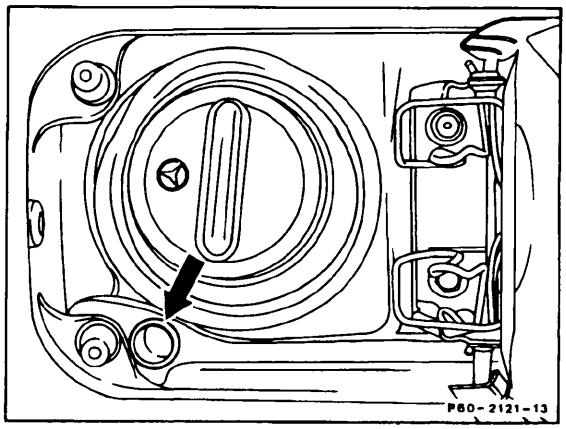

- Fuel filler well, drain outlet

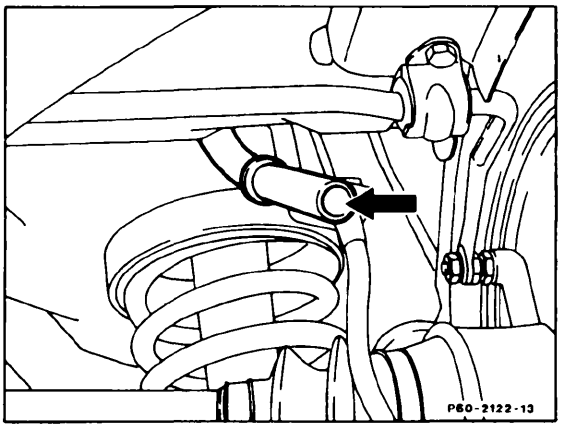

Model 107, 123, 124, 126, 201

- Rear fender

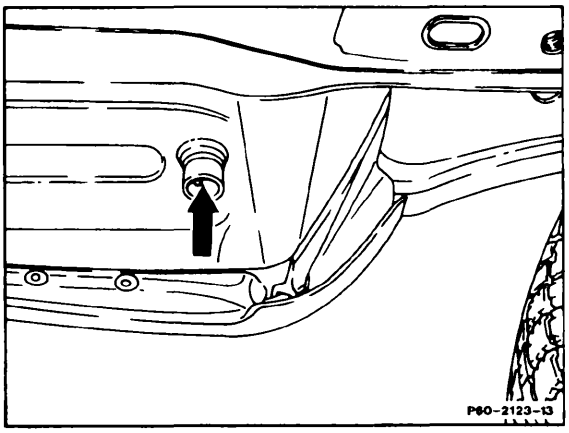

Model 107, 123, 124, 126, 140, 201

- Rear fender
- Fuel filler well, drain outlet

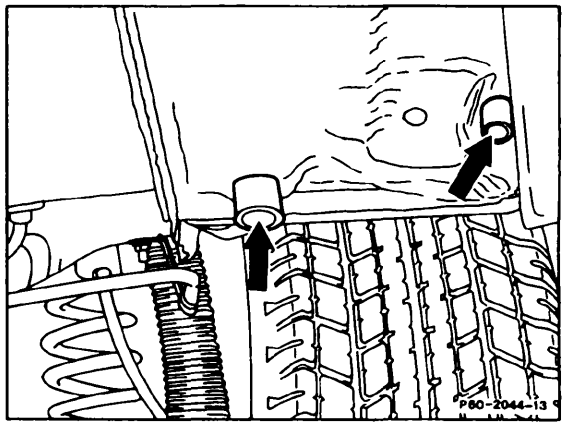

Model 129

- Spare tire well

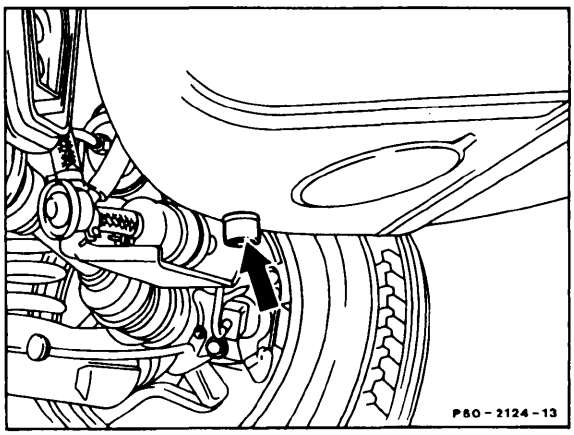

- Side member

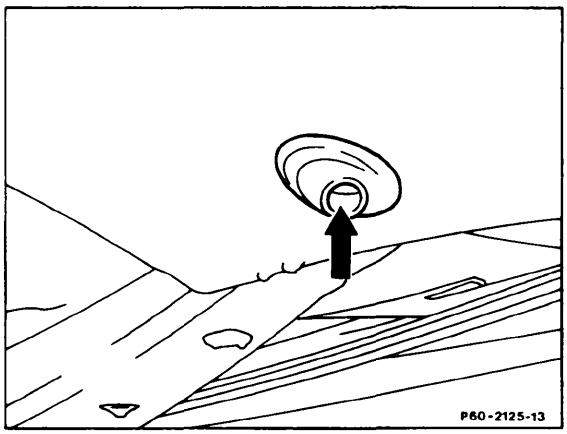

Models 123, 124, 126, 129, 140, 201

- Front of side member

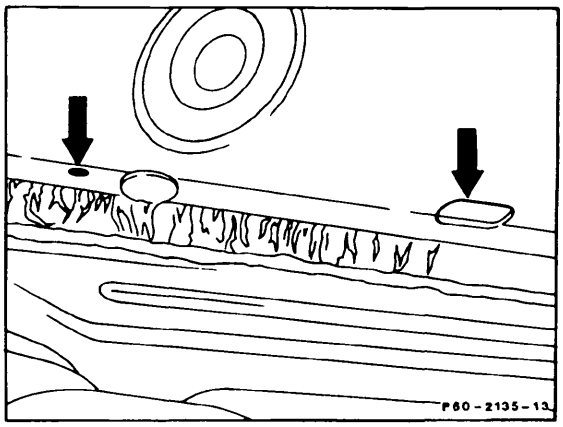

Model 107

- Rear of side member

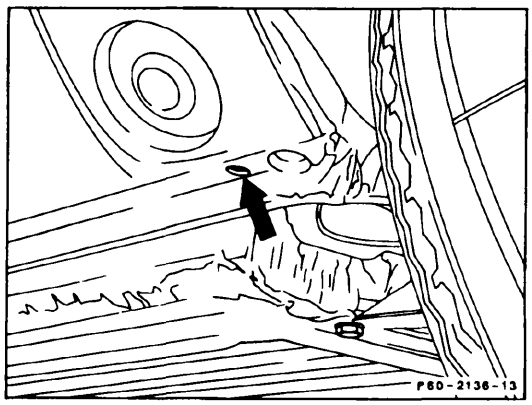

Model 107

- Side member to A-pillar transition joint

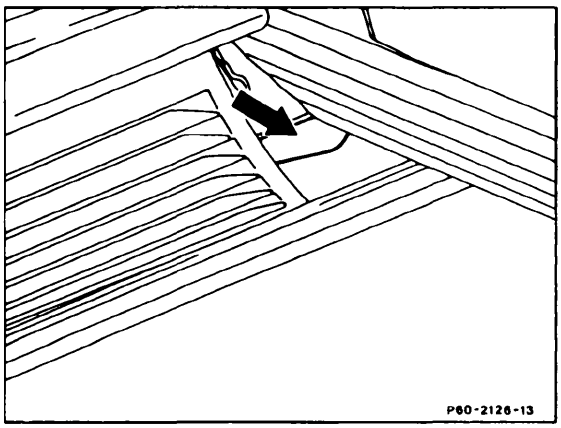

Model 107

- Upper engine compartment

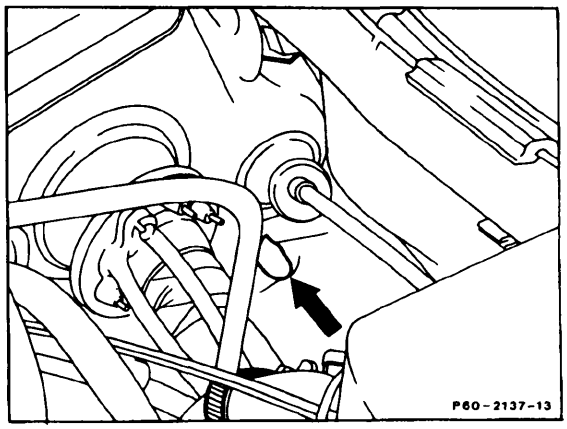

Model 123

- Lower engine compartment

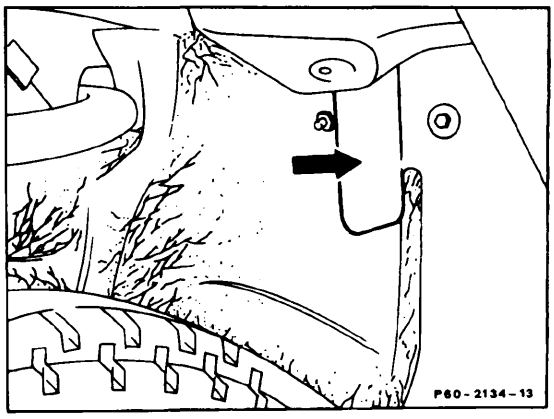

Model 123

- Air plenum (cowl) drain

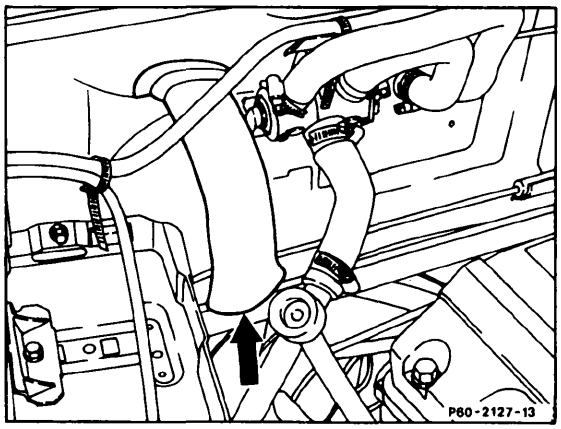

Model 123

- Drain holes in air plenum cover

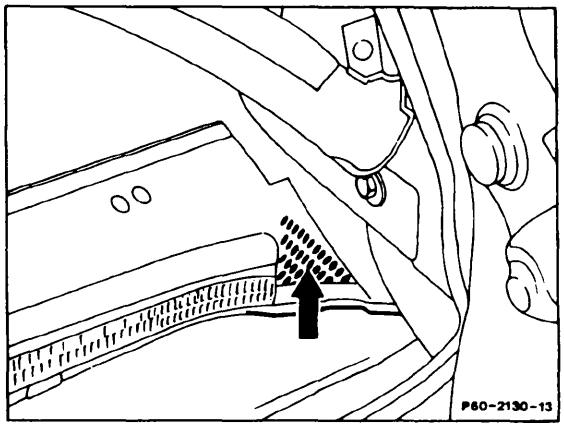

Model 126

- Air plenum (cowl), outer drain hoses

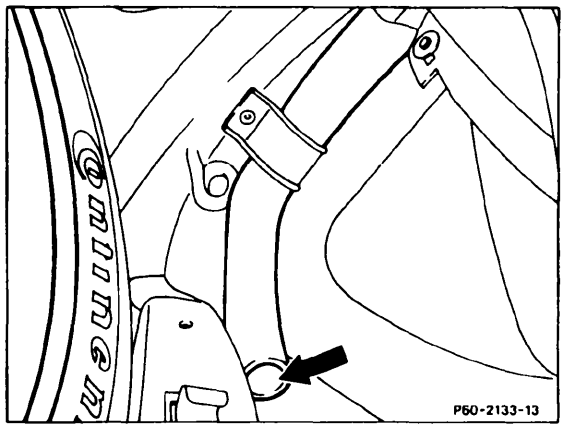

Model 126

- Air plenum (cowl), center drain

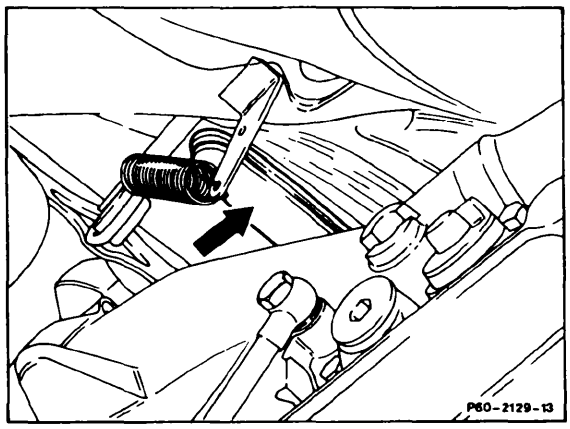

Model 126

- Air conditioning condensation drain

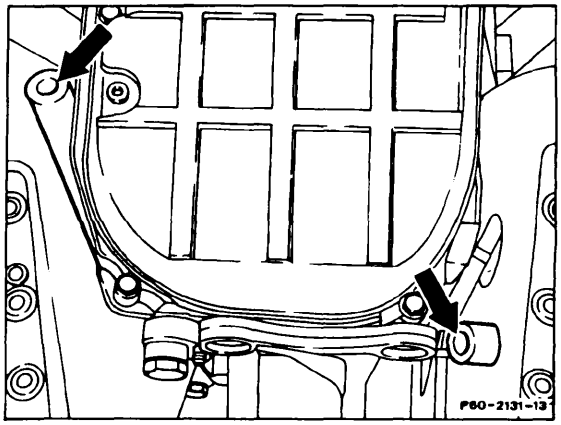

Model 124, 126, 129, 140

- Heating and air conditioning drains (in transmission tunnel)

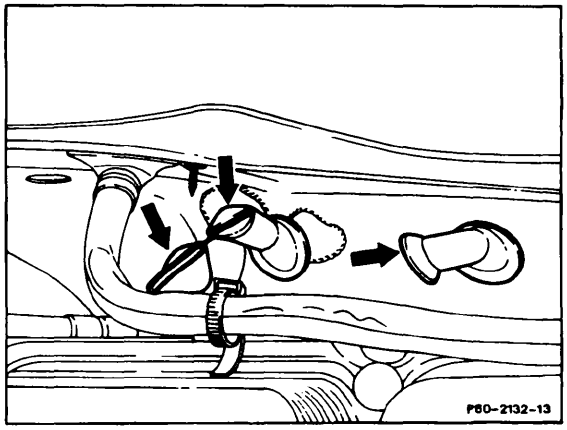

Model 107, 123

- Sunroof front

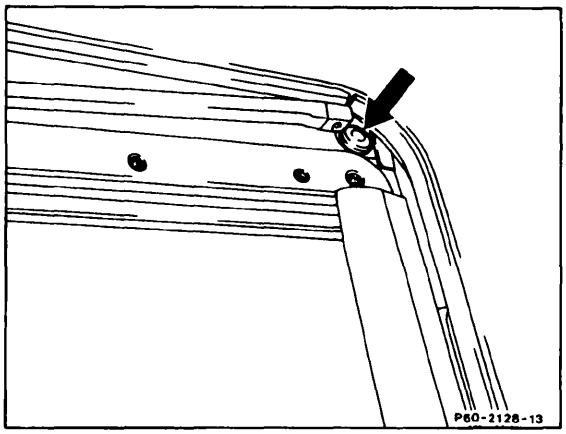

All models

- Upper A-pillar

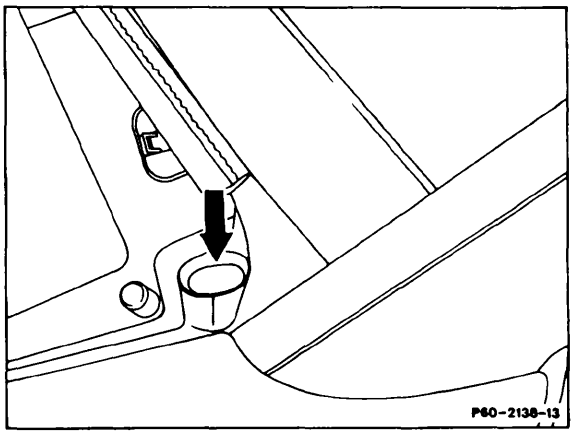

Model 124, 129, 140, 201

- A-pillar drain outlet (top arrow)
- Component compartment (lower arrow)

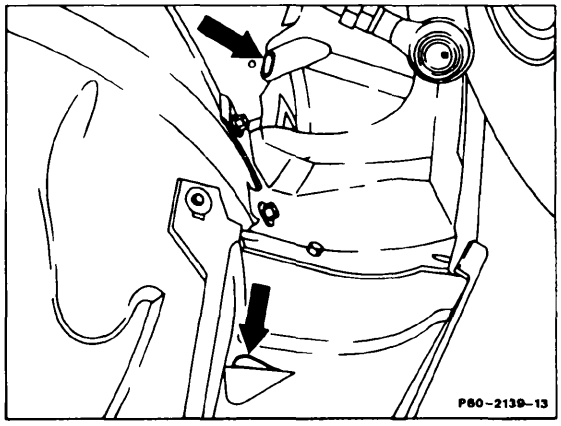

Model 124, 201

- Air plenum (cowl) drain outlet

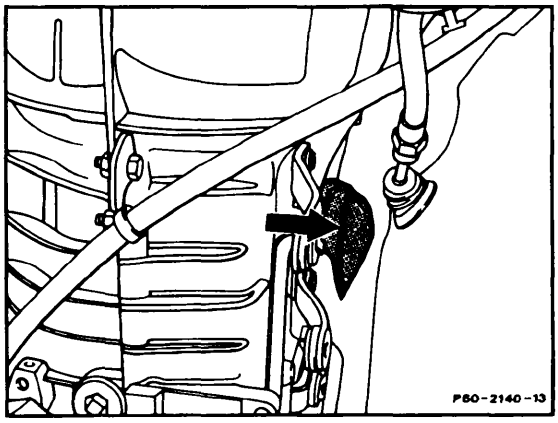

Model 124, 201

- Air plenum (cowl)

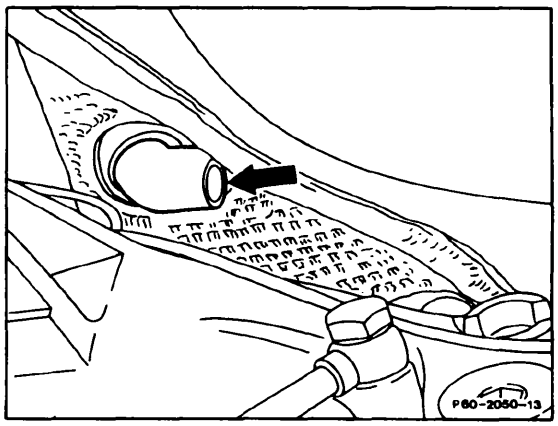

Model 129

- Air plenum (cowl)

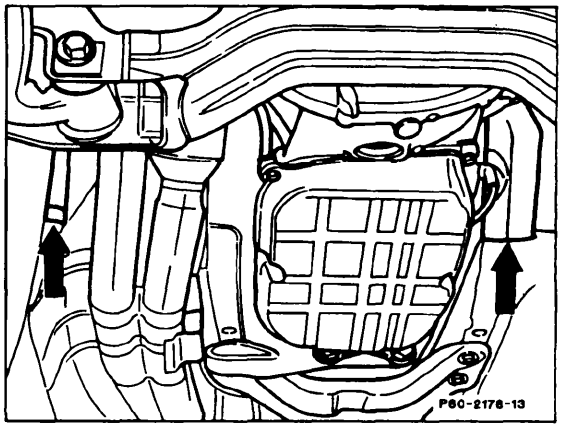

Model 140

- Fuel filler well drain outlet

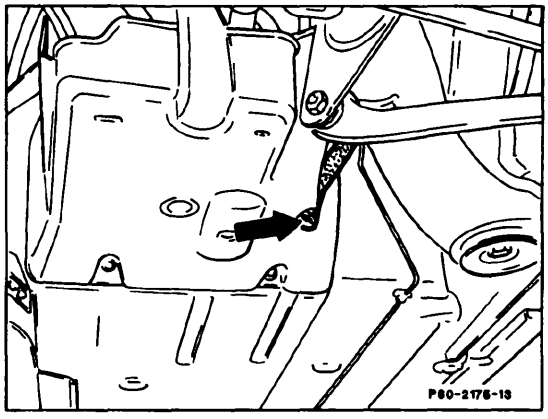

Model 140

- Lower A-pillar

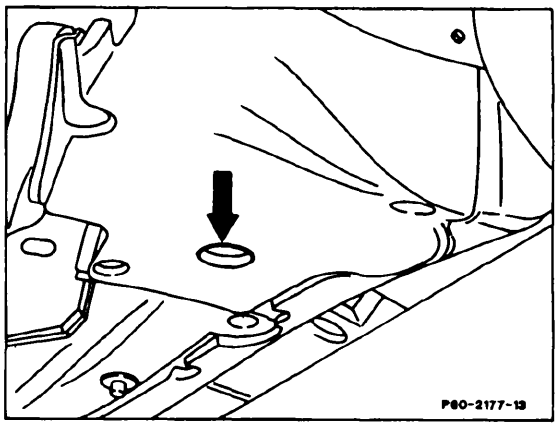

Model 129, 140

- Rear air conditioner

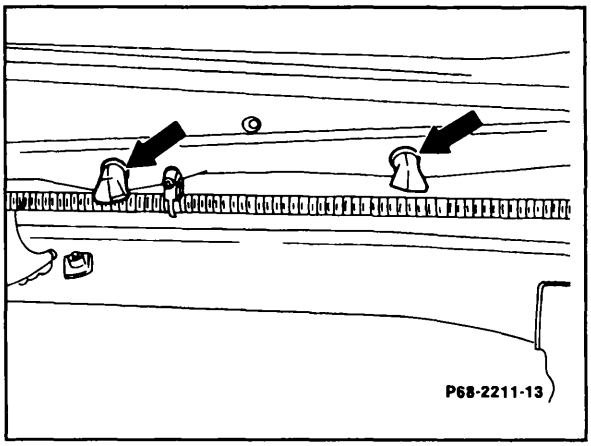

Model 140

Checking body for paint damage

9850

All models

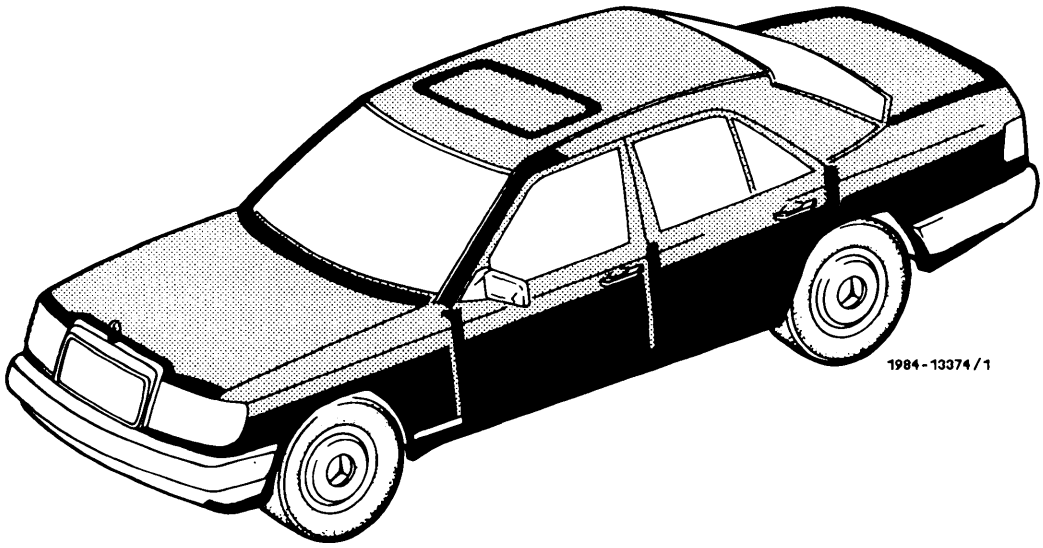

Condition of corrosion protection

- Painted outer surface
- Edges and folded lips
- Area exposed to stone damage

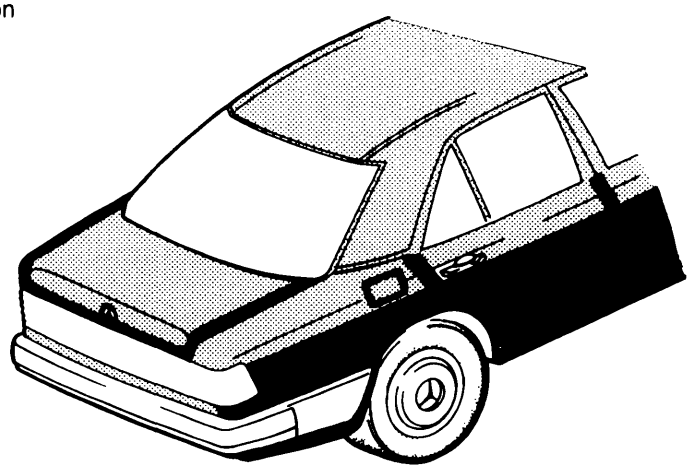

Righthand side mirror image

Note:
Remove scratches in glass by polishing, refer to
SI 67/18
Road metal, possible repairs, refer to SI 67/13A

A. Sedan and T-sedan

Special tools

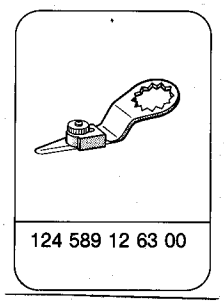
124 589 12 63 00

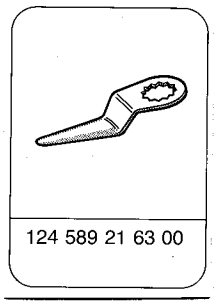
124 589 21 63 00

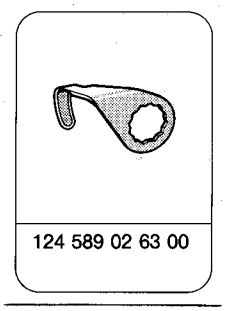
124 589 02 63 00

Conventional tools	e.g. Company, Order no.
Multi-cutter	Chicago Pneumatic D–65366 Geisenheim CP 838–12
Suction lifter	Karl Assfalg KG, Buchstraße 149 D–73525 Schwäbisch Gmünd 602–2
Electric gun with battery	Weiler & Co. Postfach 1269 D–76287 Rheinstetten, Baden Pressofix 108, Electronic, SDF–108 E

Parts	
Repair pack for glazing windshield or back window glass	124 670 01 93

Scope

1 Coating brush
2 Glass primer
3 Glass activator (cleaner)
4 Betaseal glueing material 150 ml
5 Coating nozzles
6 Cutting wire, spacing blocks, spacing angles, spacing rubber and cleaning cloth
7 Betaseal glueing material 300 ml

Removal

1 Open engine hood and set vertically.

2 Tape both front fenders in rear range with adhesive tape and additionally mount protective fender covers.

3 Remove wiper system (Group 82).

4 Pull water deflector left and right in range of front wall pillar out of holding clips and locate with rubber straps on outside mirrors.

5 Push out trimstrip at top with assembly wedge.

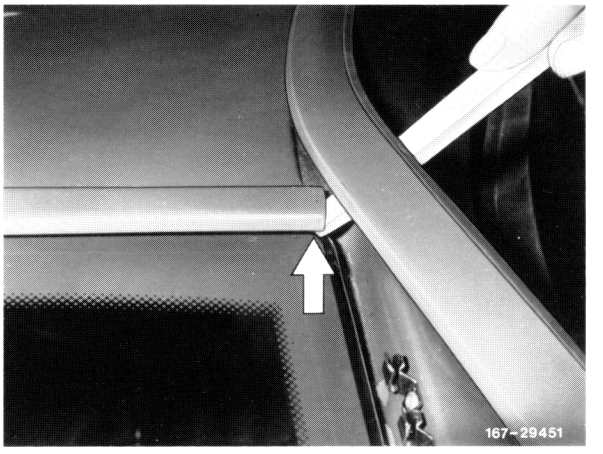

6 Remove glass support below and put away for safekeeping.

1st version: Unscrew screw or nut.

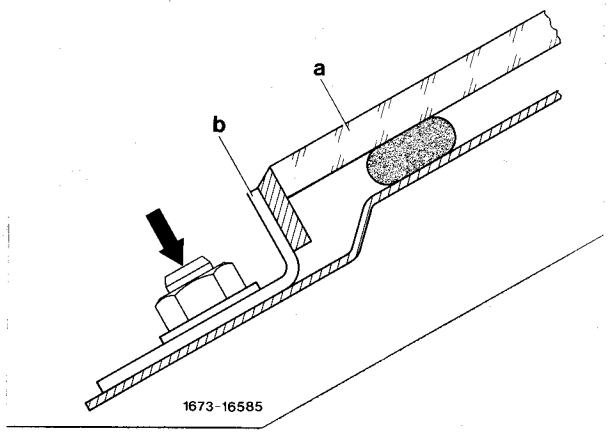

a = Glass
b = Angle bracket

2nd version: Push pin (arrow) of angle bracket, push bracket down and unclip.

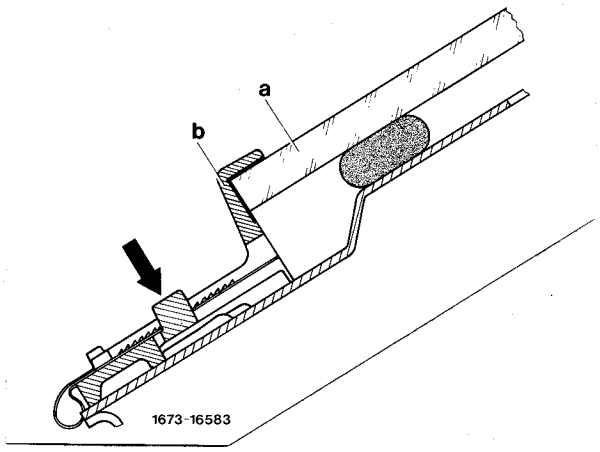

a = Glass
b = Angle bracket

3rd version: Holding strips (not visible) are separated when glass is removed.

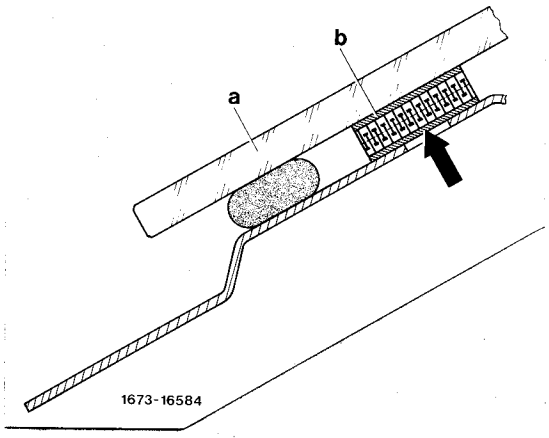

a = Glass
b = Holding strip

7 Let a second mechanic remove screws at left and right of engine hood (do not disconnect electric connections and hoses on windshield washer nozzles).

8 Raise engine hood vertically over hinges and put down horizontally in front of hinges on protective fender covers.

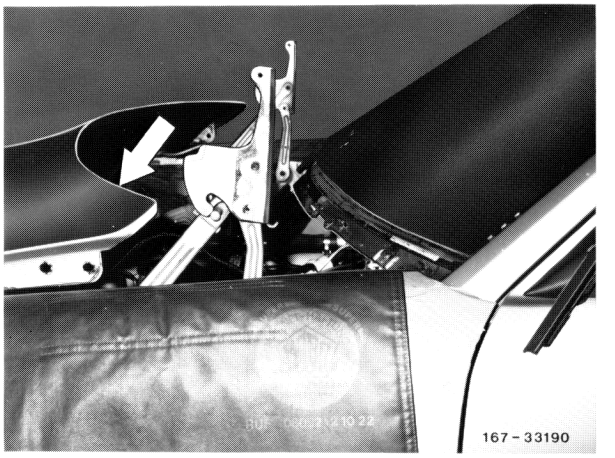

9 Mark location of clips with a felt pin on glass, so that the multi-cutter in range of clips can be slightly pulled back when glueing bead is cut through.

10 Remove reveal molding on windhsield at top and laterally (68–400 and 68–405).

11 Locate multi-cutter available for use (air supply interrupted).

12 Clamp knife no. 1 into multi-cutter and set stop as required (dimension a = 18 mm).

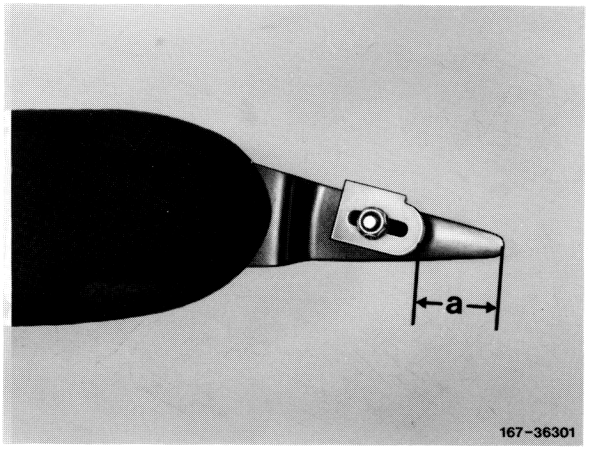

13 Moisten oil stone, connect air supply and sharpen both sides of knife with machine switched on.

14 Switch off multi-cutter.

Attention!
Wear goggles.

15 Move into working position (right-handers on front passenger seat, left-handers on driver's seat).

16 Switch on multi-cutter, plunge-cut with knife at starting point "A" and cut through adhesive bead, guiding knife in parallel with glass, in upward direction toward vehicle center.

Note: Slightly pull back multi-cutter in range of upper clips (mark).

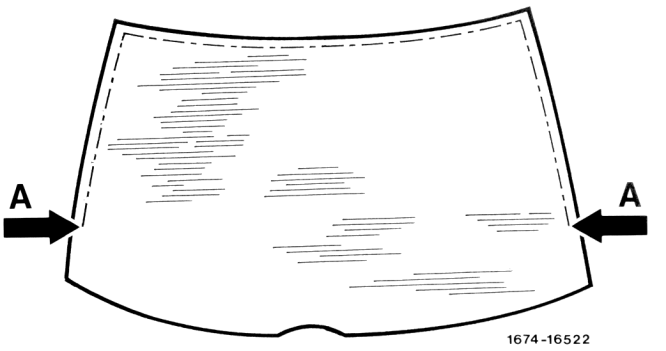

17 Switch off multi-cutter.

18 Change operating position and cut through bead on other side.

19 Switch off multi-cutter (air supply interrupted), change knife no. 1 for knife no. 2 and sharpen (item 13).

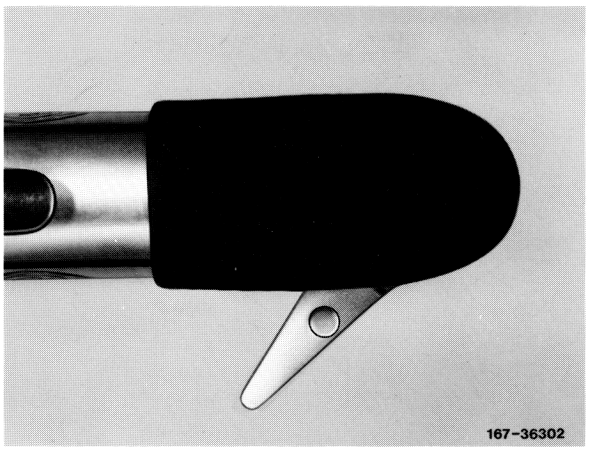

20 Move into operating position adjacent to front fender.

21 Switch on multi-cutter, plunge-cut knife at starting point "B" and cut through adhesive bead (pulling multi-cutter toward body).

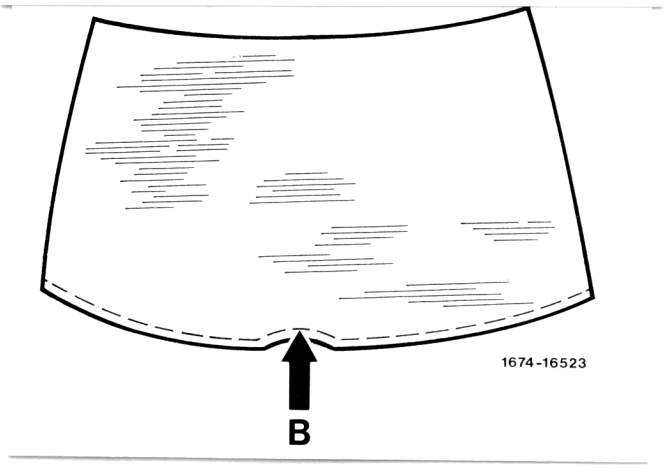

22 Switch off multi-cutter (interrupt air supply) and clamp knife in new position.

23 Change operating position and cut through bead on other side.

24 Switch off multi-cutter (interrupt air supply).

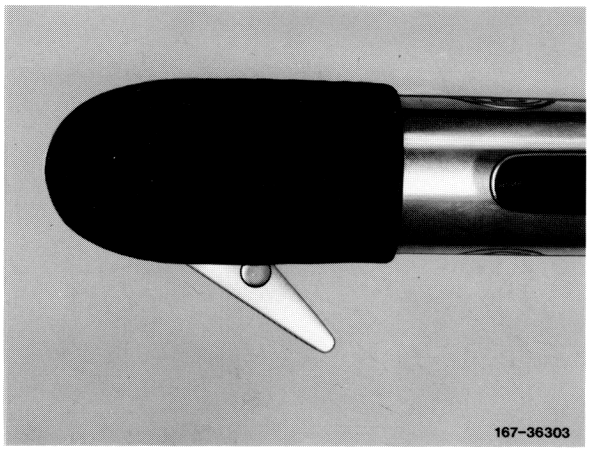

25 Change knife no. 2 for knife no. 3 and sharpen (item 13).

26 Lift glass in upper range of vehicle body and introduce knife from outside into gap.

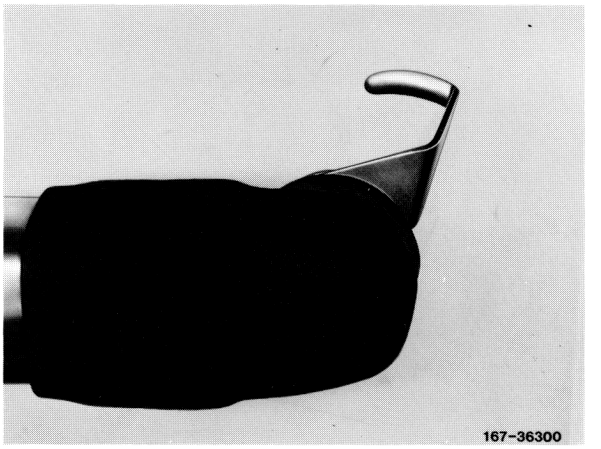

27 Switch on multi-cutter and cut from starting point "A" as far as the lower corners.

Note: If the adhesive material cannot be completely cut through with the available knives, use cutting wire.

28 When removing an undamaged glass pane, check prior to pushing pane out, whether there is enough free space all-around and remove holding clips for fastening water deflector by means of a chisel or the like, if required. Remove glass with suction lifter.

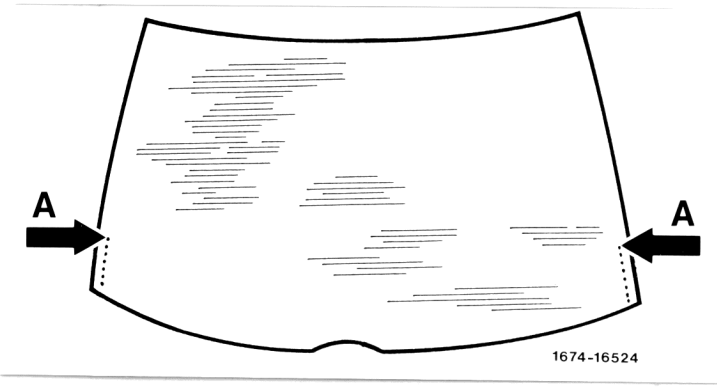

Installation

29 Change knife no. 3 for knife no. 2 (item 19), cut off remaining adhesive material on body flange. Max. 2 mm may remain in place. Pull off loose glueing material (not completely cut-off residual pieces).
Renew damaged holding strips, if required.

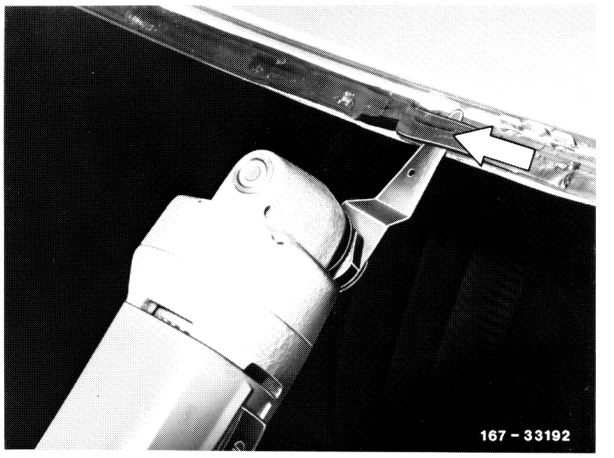

30 Coat paint damage on body flange, which is not covered by the glueing material, with priming pencil, part no. 000 986 06 50.

31 Prepare glass for glazing.

When using the previously installed glass pane:

Cut off residual glueing material on glass down to a few tenths of a millimeter. Renew damaged holding strips, if any.

Pull off loose glueing material (not completely cut-off residual parts) and rub off glueing range with non-fluffy rag.
Do not use cleaning compound.

Repair damaged primer layer.

Let primer air-dry for at least 5 minutes.

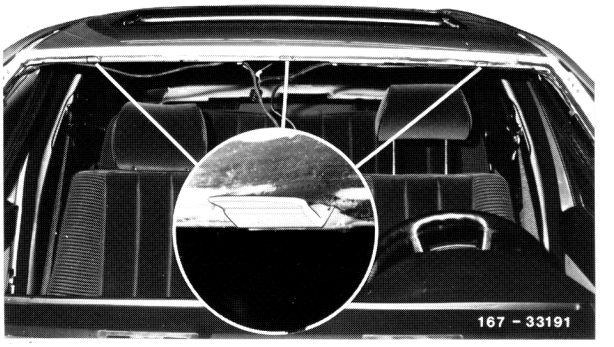

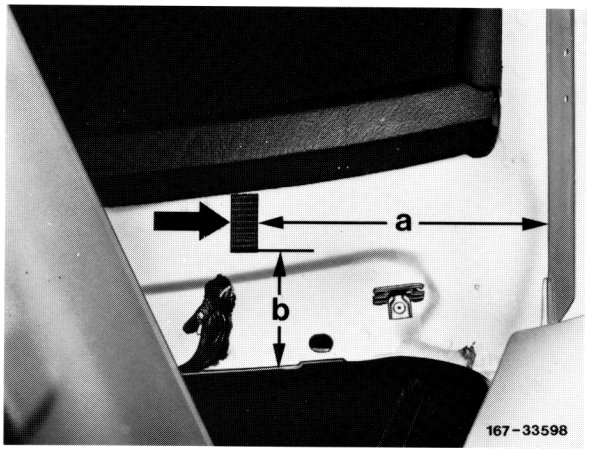

When installing a new glass pane:

Check pane for scratches and damage. Apply glass activator (cleaner) from repair pack with non-fluffy rag in glueing range, then rub dry with a second rag.

Attention!
Do not use cleaning compound in visibility range of glass, since this may lead to clouding.

Shake primer energetically and apply within glueing range (max. width 30 mm).
Let primer air-dry for at least 5 minutes.

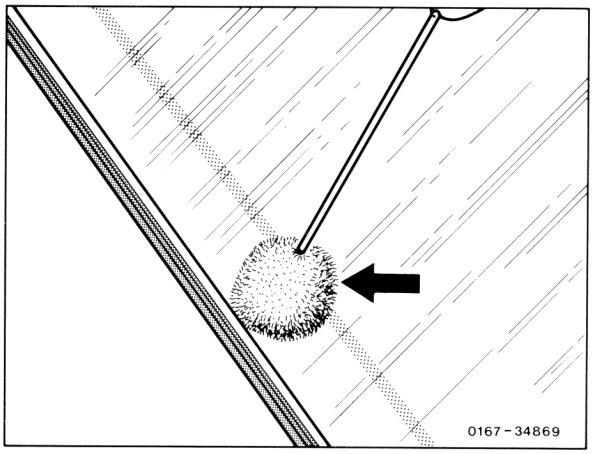

32 Push spacers (2 each) from repair pack into upper, outer holding clips.

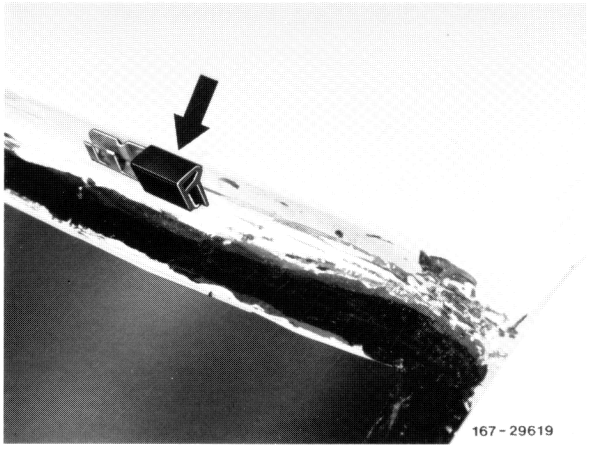

33 Insert angular spacers (3 each) from repair pack at top into body flange.

Check rubber buffers on lower glueing flange and renew, if required (contained in repair pack)

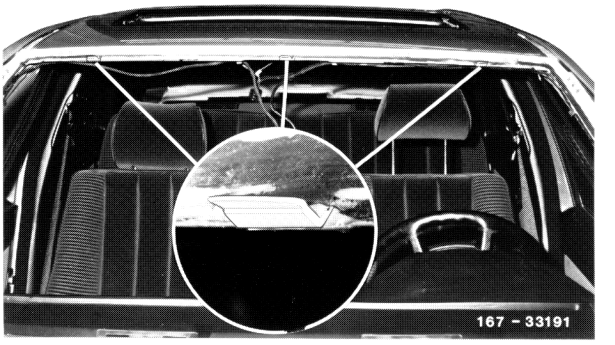

34 Preassemble glass pane support, below (item 6).

Note: When installing a new glass pane, glue holding strip (upper and lower part assembled) on cross member under windshield pane (arrow). Pull paper strip from upper part only after centering glass pane.

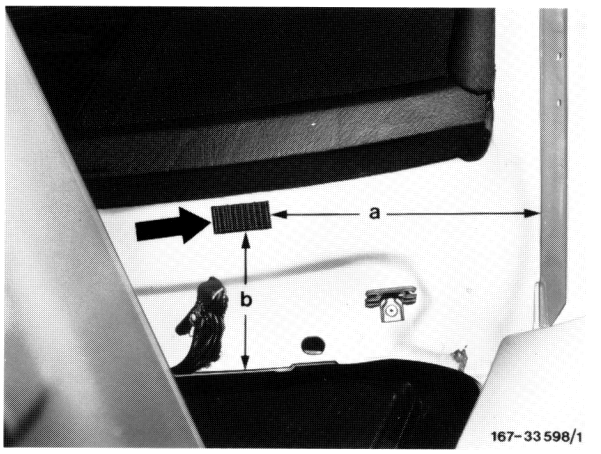

Dimension a = 120 mm
Dimension b = 60 mm

Assembly note

Prior to applying glue, center glass pane in body opening. For this purpose, mount suction lifter, position pane with second mechanic assisting at upper spacers and align. Glue on two adhesive tape strips, cut through at upper edge of pane and again remove pane.

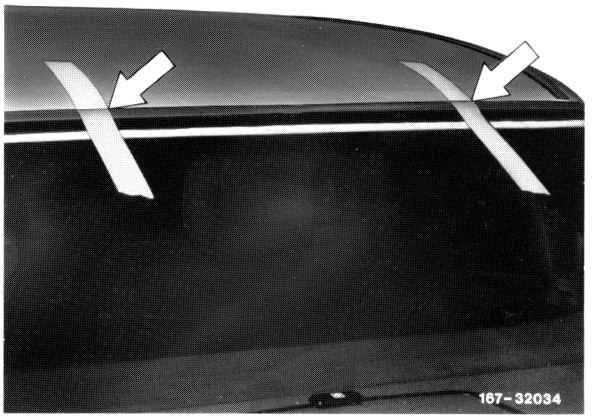

Note: When using the previously installed glass pane, mask holding strips on body with adhesive tape, so that the glass pane can be shifted for centering.

Pull off adhesive tape prior to inserting pane.

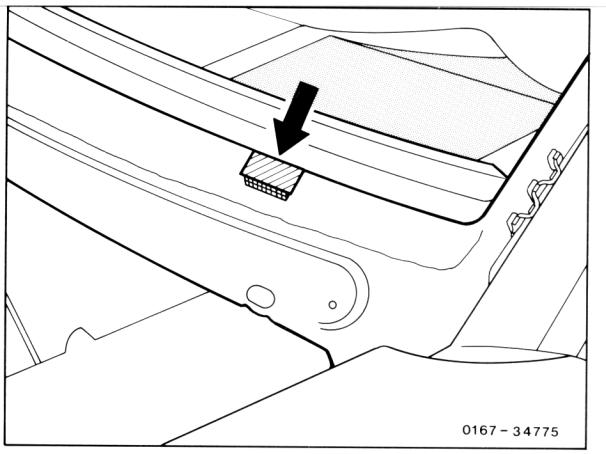

35 Remove cartridge with glue from repair pack. Cut through diaphragm, remove cartridge bottom and dump chemicals. Screw on application nozzle and insert cartridge in processing gun.

Guide nozzle along residual glue on body flange, while uniformly squeezing out the glueing material (height of glueing bead approx. 10 mm).

Attention!
Pane must be mounted within 15 minutes, since otherwise the adhesive characteristics of the glueing material will be impaired.

36 Open crank window on driver's door, so that the windshield pane cannot be pushed outward by the accumulating air while closing the doors during the drying period.

37 Position glass pane with a second mechanic assisting against upper spacers (adhesive tape flush), place on glueing bead and push down all-around as far as the spacer elements.

38 Slip glass pane support against bottom edge of glass and tighten or engage, respectively.

39 Remove spacers from clamps and clip-in trimstrip at top.

40 For further installation proceed vice versa.

Note: The drying time (stationary period of vehicle) amounts to approx. 4 hours. The rain test can be made upon completion of assembly jobs.

In the event of leaks, refer to 97–850.

B. Coupe

Special tools

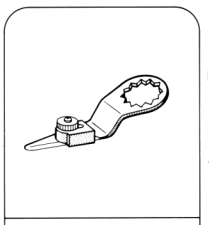

124 589 12 63 00

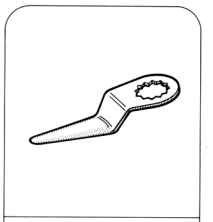

124 589 21 63 00

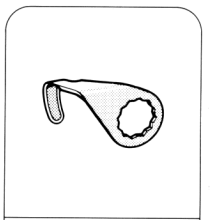

124 589 02 63 00

Conventional tools	e. g. company, Order no.
Multi-cutter	Chicago Pneumatic D-65366 Geisenheim CP 838–12
Suction lifter	Karl Assfalg KG, Buchstraße 149 D-73525 Schwäbisch Gmünd 602–2
Electric gun with battery	Weiler & Co. Postfach 1269 D-76287 Rheinstetten, Baden Pressofix 108, Electronic, SDF–108 E

Parts

Repair pack for glazing windshield or back window glass	124 670 01 93

Scope

1 Coating brush
2 Glass primer
3 Glass activator (cleaner)
4 Betaseal glueing material 150 ml
5 Coating nozzles
6 Cutting wire, spacing blocks, spacing angle brackets, spacing rubber and cleaning cloth
7 Betaseal glueing material 300 ml

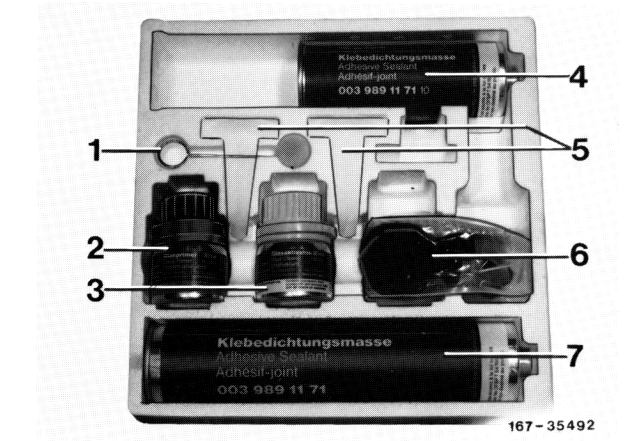

Removal

1 Open engine hood and position vertically.

2 Mask both front fenders in rear range with adhesive tape and additionally mount protective fender covers.

3 Remove wiper unit (Group 82).

4 Pull water deflectos at left and right out of holding clips and remove.

5 Push out top trimstrip by means of assembly wedge.

6 Pull off molded rubber strip.

1st version

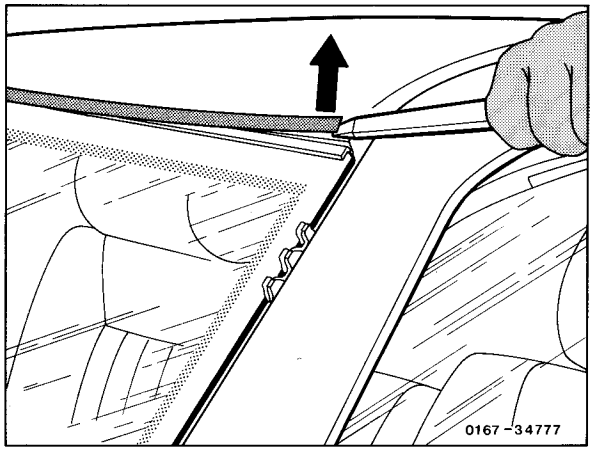

2nd version

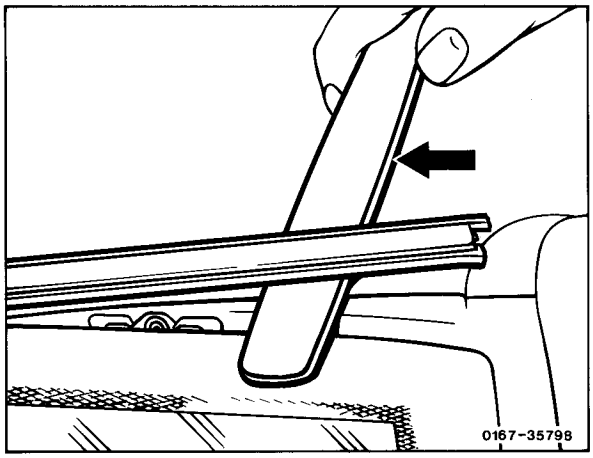

7 With second mechanic, unscrew screws of engine hood left and right (do not separate electric connections and hoses on windshield washer nozzles).

8 Lift engine hood vertically above hinges and put down horizontally in front of hinges on protective fender covers.

9 On vehicles with trimstrip 2nd version, mark location of clips with felt pencil on pane and slightly pull back driving machine in clip range when cutting through glueing bead.

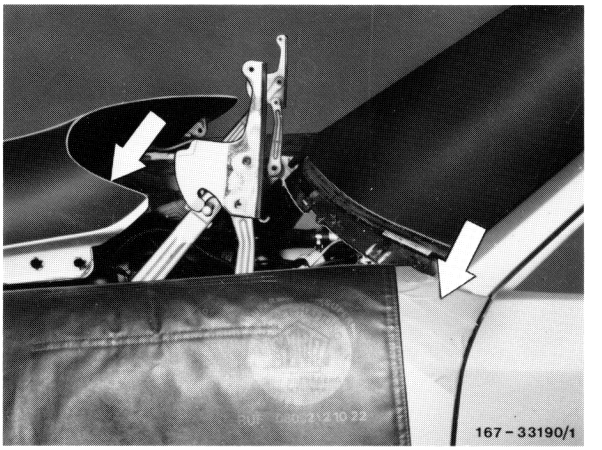

10 Remove reveal molding on windshield at top and laterally (68–400 and 68–405).

11 Locate multi-cutter available for use (air supply interrupted).

12 Clamp knife no. 1 into multi-cutter and set stop as required (dimension a = 18 mm).

13 Moisten oil stone, connect air supply and sharpen both sides of knife with machine switched on.

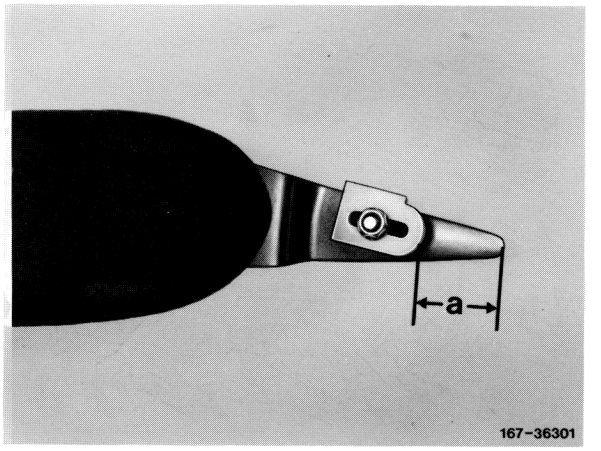

14 Switch off multi-cutter.

Attention!
Wear goggles.

15 Move into operating position (right-handers on front passenger seat, left-handers on driver's seat).

16 Switch on multi-cutter, plunge-cut with knife at starting point "A" and cut through adhesive bead, guiding knife in parallel with glass, in upward direction toward vehicle center.

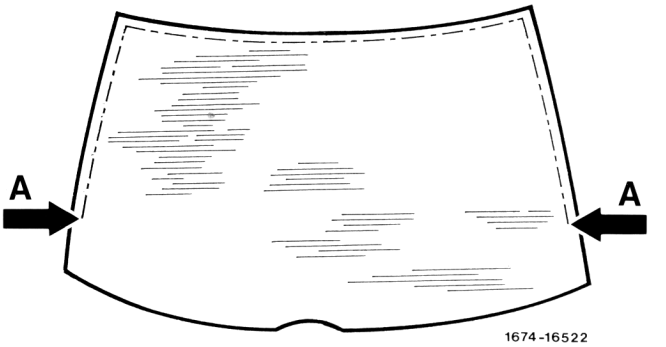

Note: Slightly pull back multi-cutter in range of upper clips (mark).

17 Switch off multi-cutter.

18 Change operating position and cut through bead on other side.

19 Switch off multi-cutter (interrupt air supply), change knife no. 1 for knife no. 2 and sharpen (item 13).

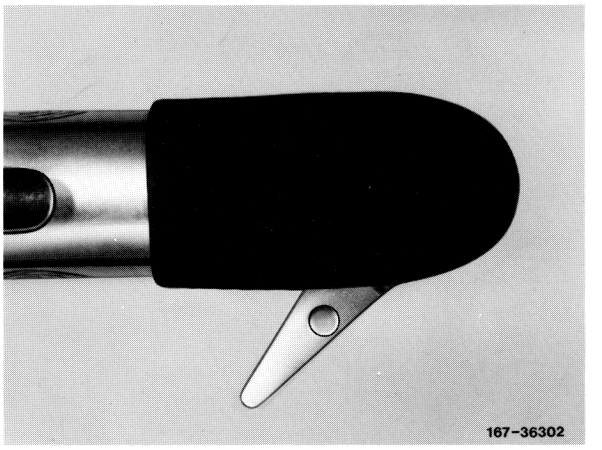

20 Move into operating position adjacent to front fender.

21 Switch on multi-cutter, plunge-cut knife at starting point "B" and cut through adhesive bead (pulling multi-cutter toward body).

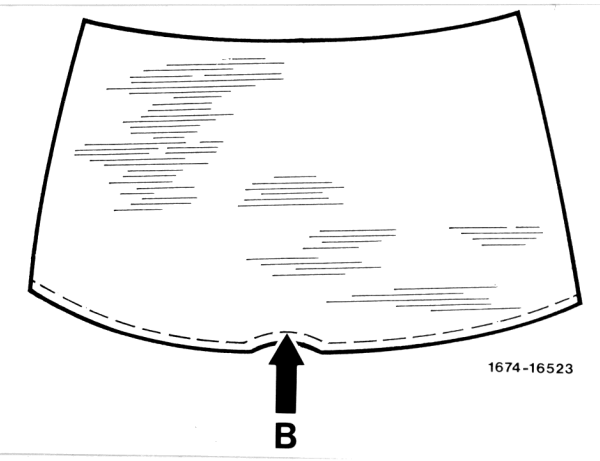

22 Switch off multi-cutter (interrupt air supply) and clamp knife in new position.

23 Change operating position and cut through bead on other side.

24 Switch off multi-cutter (interrupt air supply).

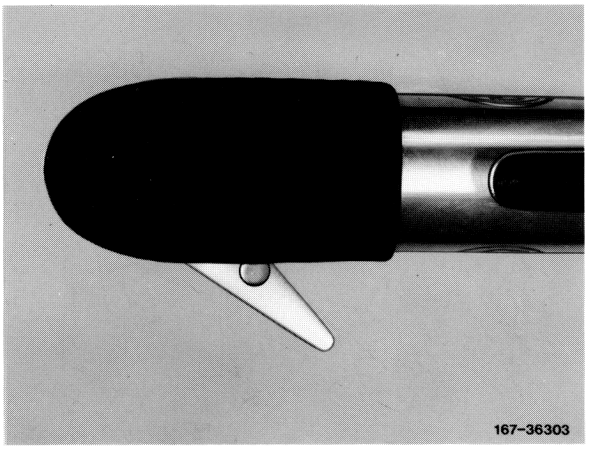

25 Change knife no. 2 for knife no. 3 and sharpen (item 15).

26 Lift glass in upper range of vehicle body and introduce knife from outside into gap.

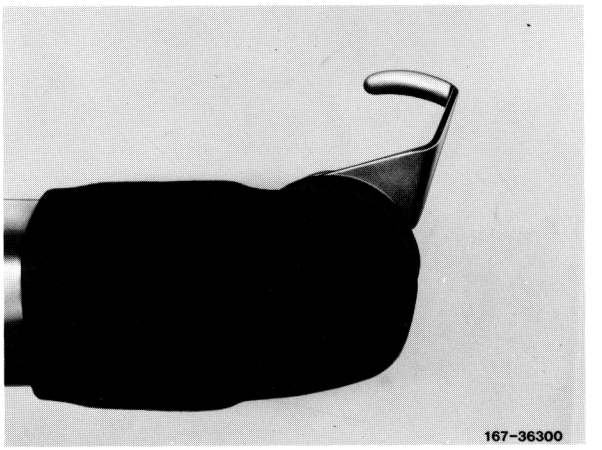

27 Switch on multi-cutter and cut from starting point "A" as far as the lower corners.

Note: If the adhesive material cannot be completely cut through with the available knives, use cutting wire.

28 When removing an undamaged glass pane, check prior to pushing pane out, whether there is enough free space all-around and remove holding clips for fastening water deflector, by means of a chisel or the like, if required.
Remove glass with suction lifter.

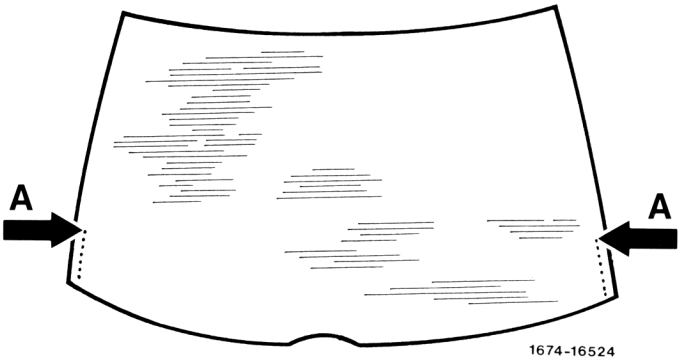

Installation

29 Change knife no. 3 for knife no. 2 (item 24), cut off remaining adhesive material on body flange. Max. 2 mm may remain in place. Pull off loose glueing material (not completely cut-off residual pieces).
Renew damaged holding strips, if required.

30 Coat paint damage on body flange, which is not covered by the glueing material, with priming pencil, part no. 000 986 06 50.

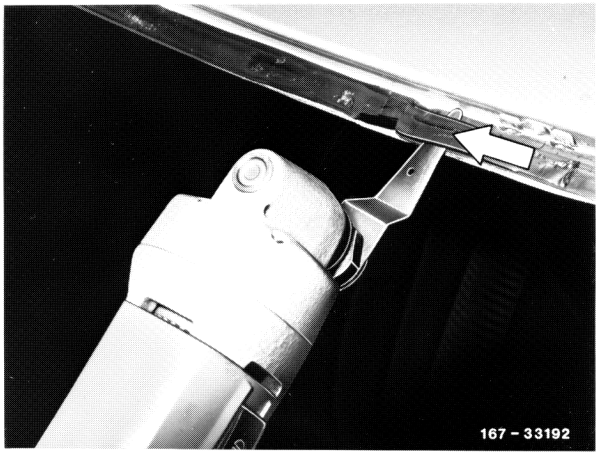

A001A5

31 Prepare glass for glazing.

When using the previously installed glass pane:

Cut off residual glueing material on glass down to a few tenths of a millimeter. Renew damaged holding strips, if any.

Pull off loose glueing material (not completely cut-off residual parts) and rub off glueing range with non-fluffy rag.
Do not use cleaning compound.

Repair damaged primer layer.

Let primer air-dry for at least 5 minutes.

When installing a new glass pane:

Check pane for scratches and damage. Apply glass activator (cleaner) from repair pack with non-fluffy rag in glueing range, then rub dry with a second rag.

Attention!
Do not use cleaning compound in visibility range of glass, since this may lead to clouding.
Shake primer energetically and apply within glueing range (max. width 30 mm).

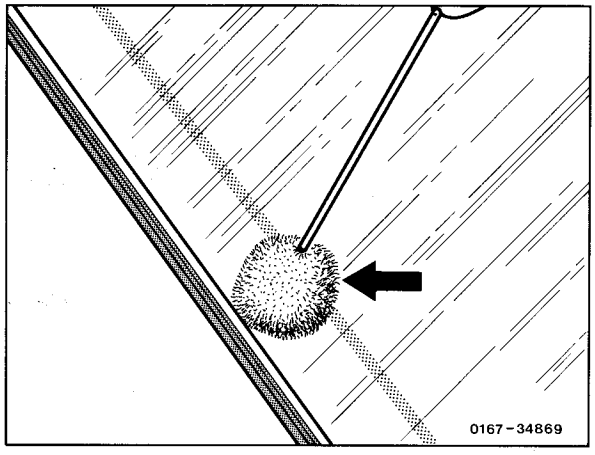

32 Premount trimstrip on glass pane.

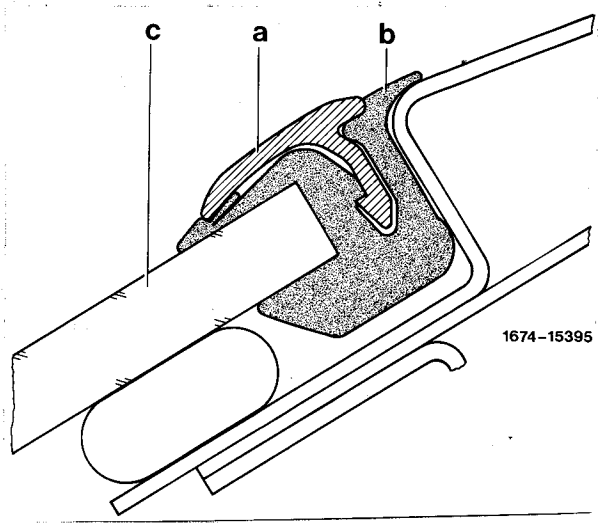

1st version

a Trimstrip
b Contoured rubber
c Glass

33 Push spacers (2 each) from repair pack into upper, outer holding clips.

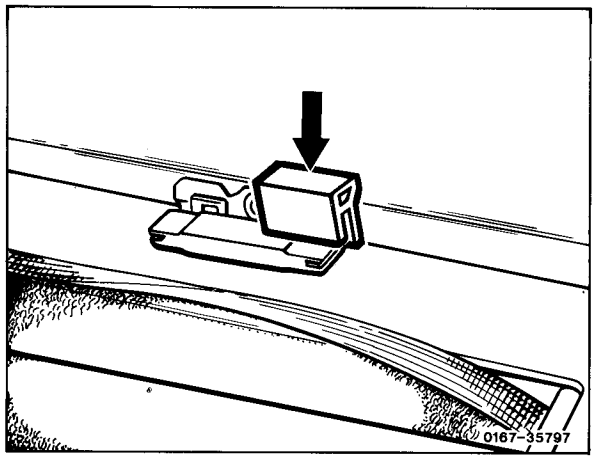

34 Insert angular spacers (3 each) from repair pack at top into body flange.

Note: When installing a new glass pane, glue holding strip (upper and lower part assembled) on cross member under windshield pane (arrow). Pull paper strip from upper part only after centering glass pane.

Dimension a = 90 mm
Dimension b = 60 mm

Assembly note

Prior to applying glue, center glass pane in body opening. For this purpose, mount suction lifter, position pane with second mechanic assisting at upper spacers and align (with trimstrip 1st version). Mark position of glass pane with a chalk stripe (arrow). Remove pane again.

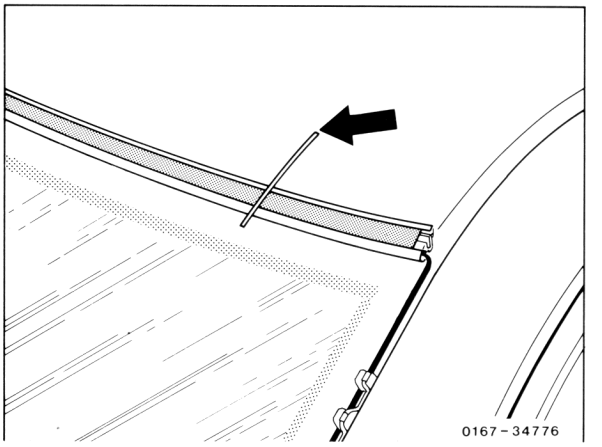

1st version

Place glass without trimstrip against upper spacers and align. Glue on two adhesive tape strips, cut through at upper edge of pane (arrow) and again remove pane.

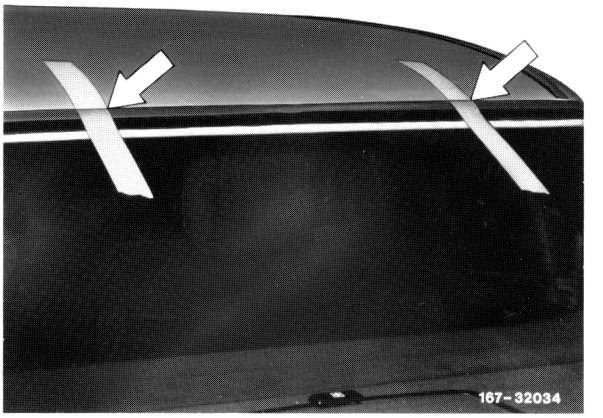

2nd version

Note: When using the previously installed glass pane, mask holding strips on body with adhesive tape, so that the glass pane can be shifted for centering.

Pull off adhesive tape prior to inserting pane.

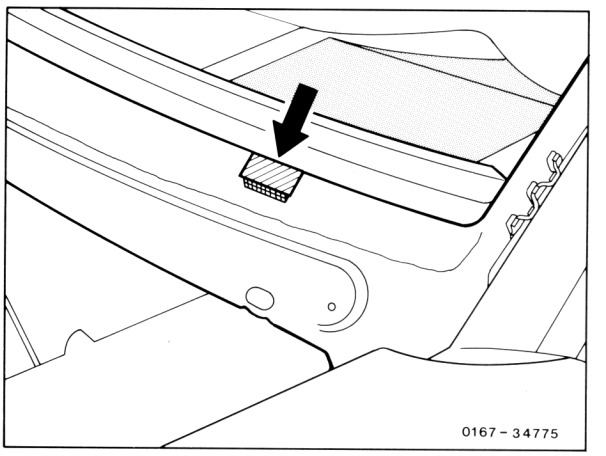

35 Remove cartridge with glue from repair pack. Cut through diaphragm, remove cartridge bottom and dump chemicals. Screw on application nozzle and insert cartridge in processing gun.

Guide nozzle along residual glue on body flange, while uniformly squeezing out the glueing material (height of glueing bead approx. 10 mm).

Attention!
Pane must be mounted within 15 minutes, since otherwise the adhesive characteristics of the glueing material will be impaired.

36 Open crank window on driver's door, so that the windshield pane cannot be pushed outwards by the accumulating air while closing the door during the drying period.

37 Position glass pane (with trimstrip 1st version), with a second mechanic assisting, against upper chalk marks, align, place on glueing bead, press down all-around until the rubber profile at top is resting perfectly against body and the holding strips at bottom are glued to pane or engaged.

38 Position pane (without trimstrip 2nd version) against upper spacers (with adhesive tape strip flush), place on glueing bead and push in all-around against the spacer elements.

39 For further installation proceed vice versa.

Note: The drying time (stationary period of vehicle) amounts to approx. 4 hours. The rain test can be made upon completion of assembly jobs.

In the event of leaks, refer to 97–850.

C. Convertible

Preliminary work:
Removal and installation of reveal molding at side of windshield (68–405).
Removal and installation of panel above windshield (68–410).
Removal and installation of reveal molding at top of windshield (68–425).
Engine hood in vertical position
Removal and installation of windshield wiper system (82–680).

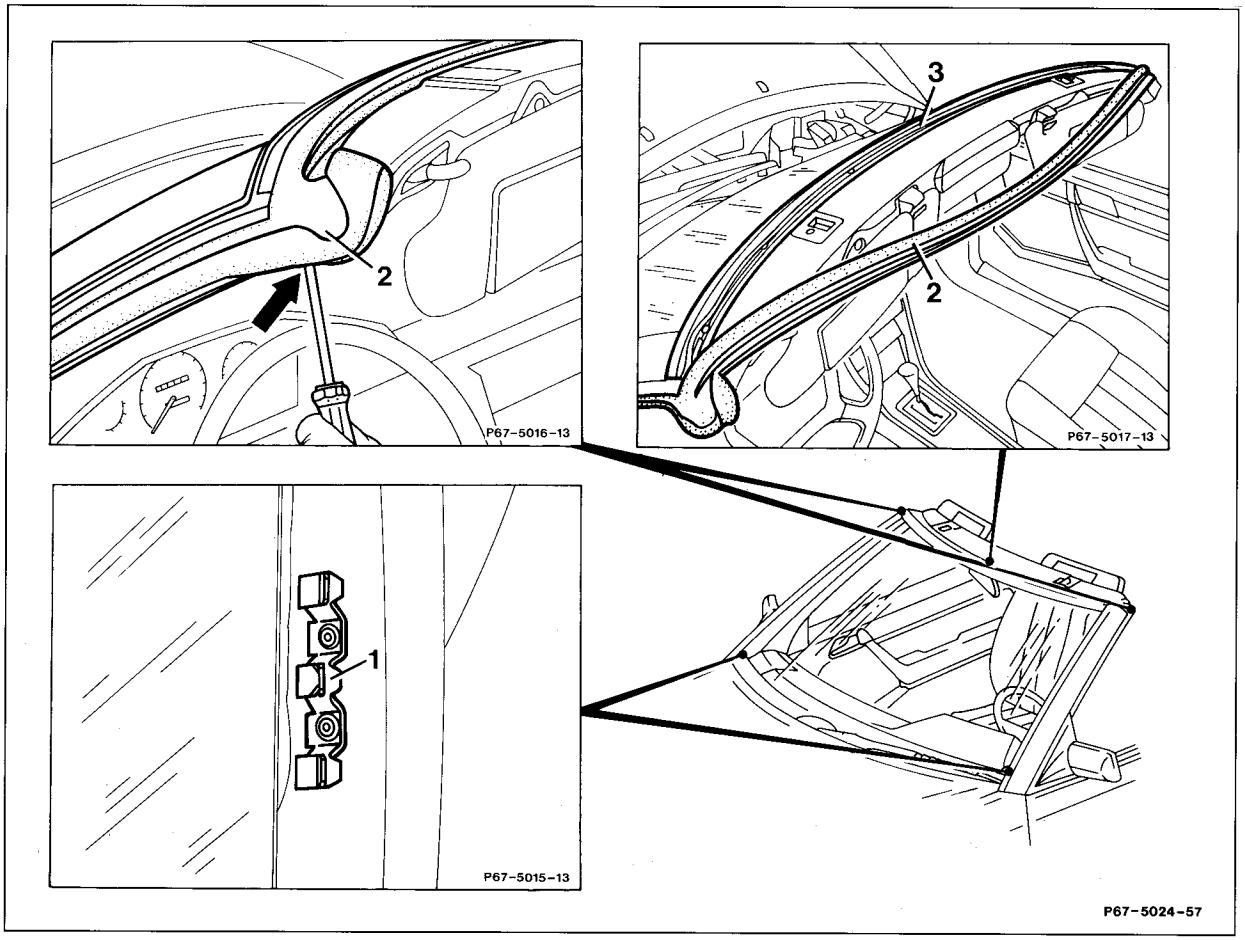

Fenders in area of A-pillar	mask with masking tape and cover fenders with protective fender covers.
Molding on A-pillar	remove, install.
Clip (1)	remove, install (chisel off rivet head, rivet on).
Screw (arrow)	screw out of sealing frame (2), screw in.
Sealing frame (2)	pull off, install (item 11).
Molding (3)	remove, install.

Note
Replace damaged seals.

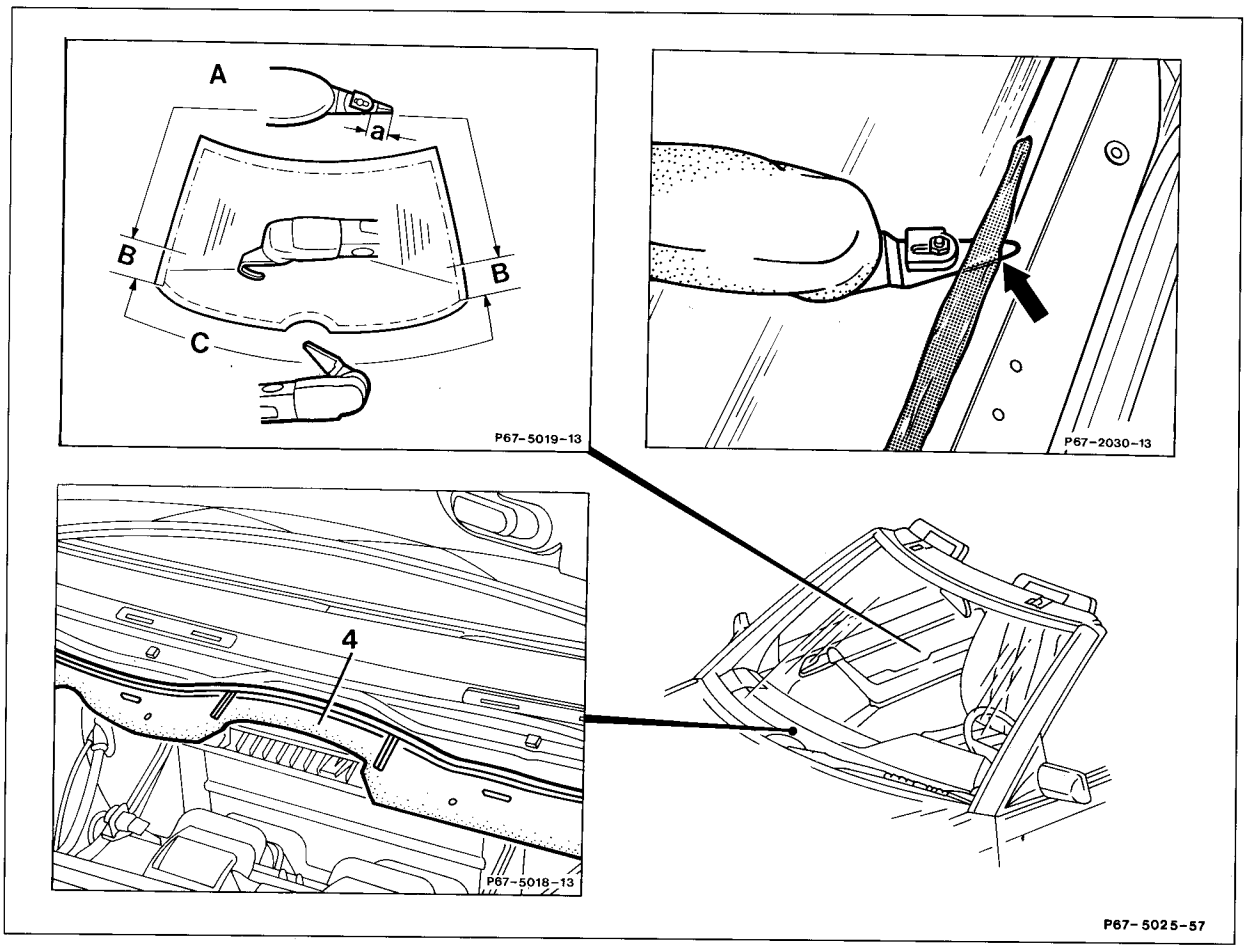

Seal (4) below windshield (only on vehicles with air conditioner)	pull out, install.
Blade 124 589 12 63 00	clamp into multi-cutter.

⚠

Ensure that the air supply is interrupted when clamping in the blade. Wear goggles when cutting out the windshield.

Blade	sharpen (item 1).
Windshield in area «A»	cut out (item 2).
Blade 124 589 21 63 00	clamp into multi-cutter.
Blade	sharpen (item 1).
Windshield in area «C»	cut out (item 2).
Blade 124 589 02 63 00	clamp into multi-cutter.
Blade	sharpen (item 1).
Windshield in area «B»	cut out.
Windshield	remove (item 3).

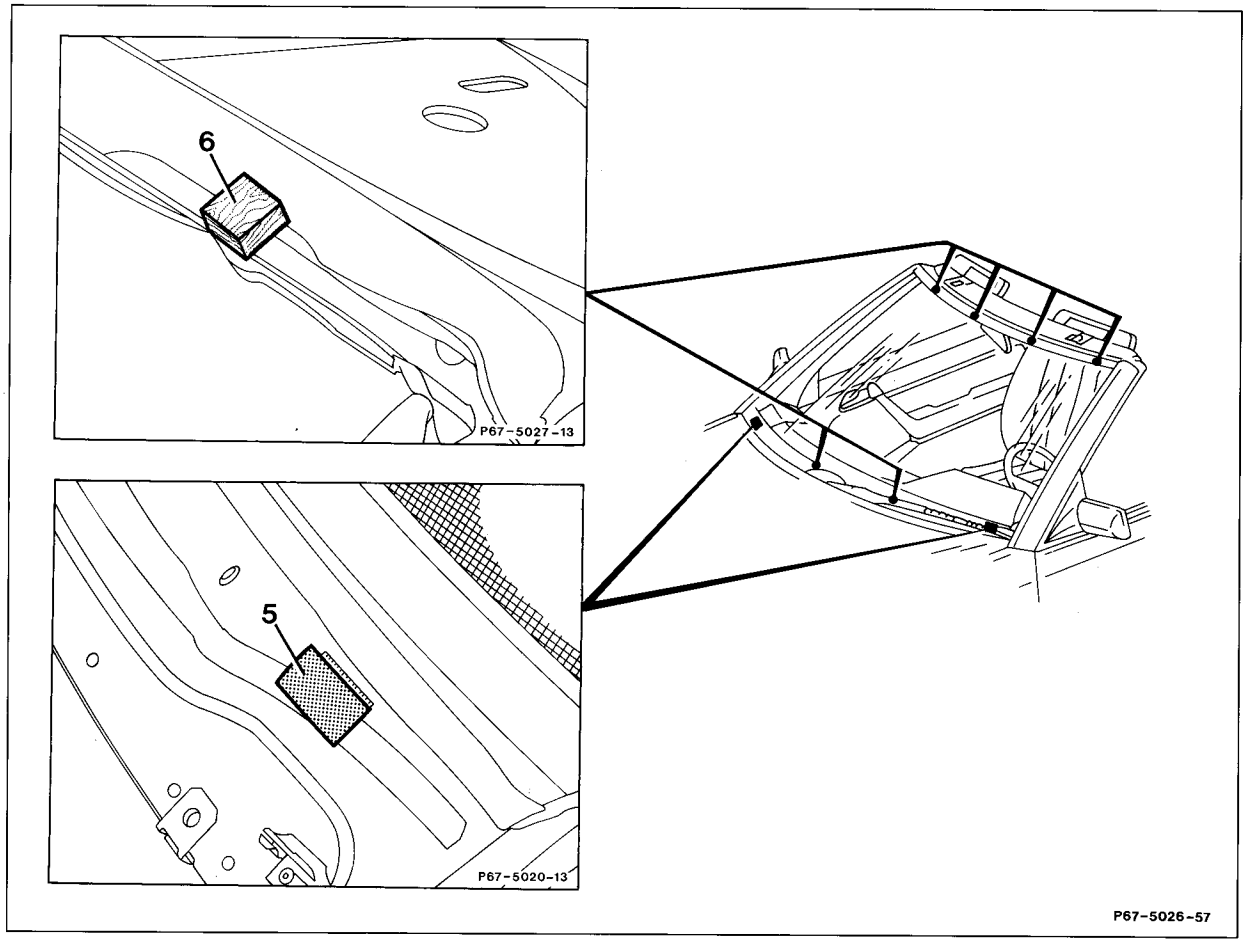

Retaining strips (5) and rubber spacers (6)	replace.
Windshield	prepare for glazing (items 4 through 6).
Windshield	align (items 7 through 8).
Protective foil	remove from retaining strips (5).
Glue	apply (items 9 through 11)

⚠
Windshield must be mounted within 15 minutes, since otherwise the adhesive characteristics of the glueing material will be impaired.

Windshield ..... install (item 12).

Note
The drying time (stationary period of vehicle) amounts to approx. 4 hours. The rain test can be made upon completion of assembly work.

In the event of leaks, refer to 97–850.

Special tools

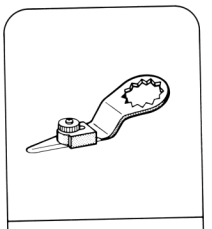

124 589 12 63 00
67

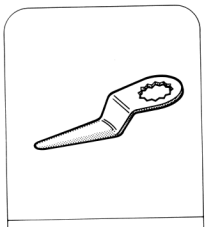

124 589 21 63 00
67

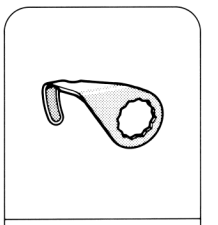

124 589 02 63 00
67

Commercially available tools	order no	e.g. Company,
Multi-cutter	CP 838 - 12	Chicago Pneumatic D-65366 Geisenheim
Suction lifter	602 - 2	Karl Assfalg KG, Buchstraße 149 D-73525 Schwäbisch Gmünd
Electric gun with battery.	Pressofix 108 Electronic SDF - 108 E	Weiler & Co. Postfach 12 69 D-76287 Rheinstetten, Baden

Parts

Repair pack for glazing windshield or back window glass	124 670 01 93

Scope of delivery

1 Coating brush
2 Glass primer
3 Glass activator (cleaner)
4 Betaseal glueing material 150 ml
5 Coating nozzles
6 Cutting wire, spacing blocks, spacing angles, rubber spacers and cleaning cloth
7 Betaseal glueing material 300 ml

409/23

1 Moisten whet stone and sharpen both sides of blade with machine switched on.

2 Cut out windshield at side in area "A" (stop a = 28 mm) from inside and at top from outside.
Cut out in area "C" from outside.
Cut out in area "B" from outside.

Note
If the adhesive material cannot be cut through completely with the blades available, use cutting wire.

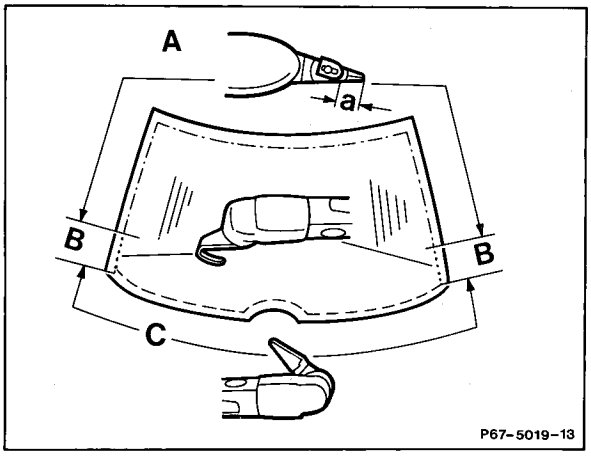

3 Remove windshield from body with suction lifter and cut remaining adhesive material off of body flange.

Note
Max. 2 mm may remain in place. Pull off loose glueing material (not completely cut-off residual pieces).
Coat paint damage on body flange, which is not covered by the glueing material, with priming pencil, part no. 000 986 06 50.

4 When using previously installed windshield: Cut off residual glueing material on glass down to a few tenths of a millimeter. Pull off loose glueing material (not completely cut-off residual parts) and rub off glueing range with non-fluffy rag. Do not use cleaning compound.
Repair damaged primer layer.

Let primer air-dry for at least 5 minutes.

5 When installing a new windshield:
Check windshield for scratches and damage.
Apply glass activator (cleaner) from repair pack with non-fluffy rag in glueing range, then rub dry with a second rag.

⚠
Do not use cleaning compound in visibility range of glass, since this may lead to clouding.

6 Shake primer energetically and apply within glueing range (max. width 30 mm).
Let primer air-dry for at least 5 minutes.

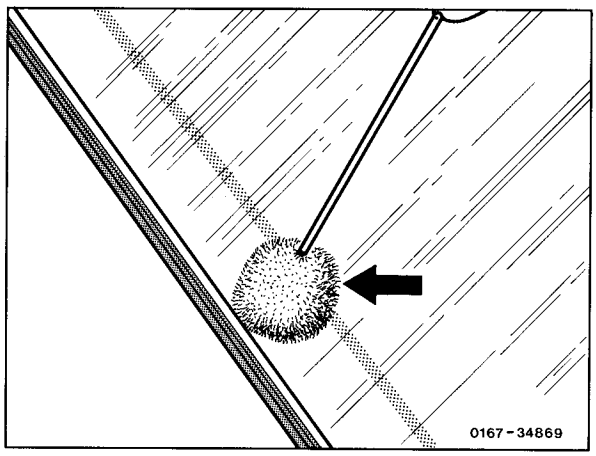

7 Before applying glue center windshield in body opening, dimension A = 34 mm, measured from top of retaining clip to top of windshield.

8 Apply strips of adhesive tape, cut through at top of windshield and remove windshield again.

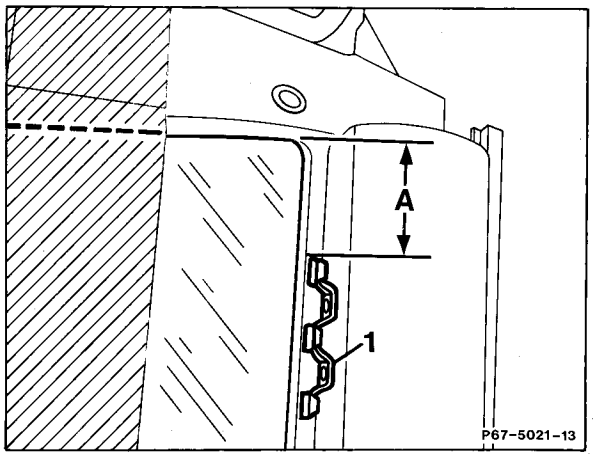

9 Remove cartridge with glue from repair pack. Cut through diaphragm, remove cartridge bottom. Screw on application nozzle and insert cartridge in processing gun.

Guide nozzle along residual glue on body flange, while uniformly squeezing out the glueing material (height of glueing bead approx. 10 mm).

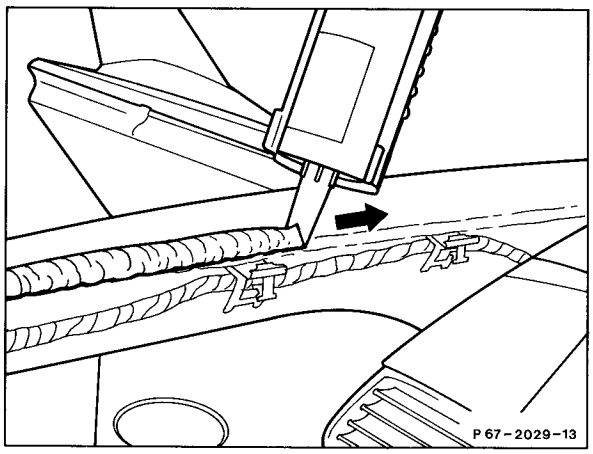

10 Lift seal (4) at side and apply bead of glue.

11 Press seal (4) into bead of glue (only on vehicles with air conditioner).

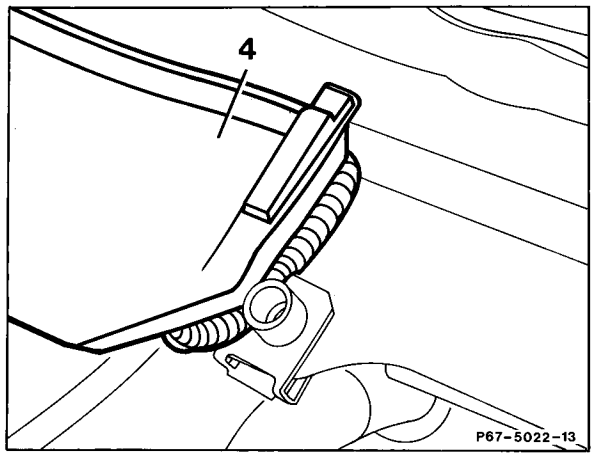

⚠
Windshield must be mounted within 15 minutes, since otherwise the adhesive characteristics of the glueing material will be impaired.

12 Position windshield with help of second mechanic on adhesive bead with strips of adhesive tape aligned and press down until it contacts the retaining strips (5) at the bottom and the rubber spacers (6) at the top.

13 Install sealing frame (2) in retaining strip on A-pillar.

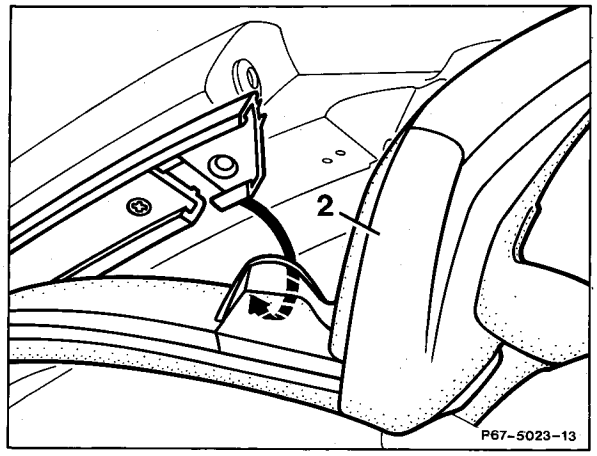

⚠
When pressing in ensure that the hook (arrow) on the retaining rail engages in the pocket (arrow) on the sealing frame (2).

Note
The drying time (stationary period of vehicle) amounts to approx. 4 hours. The rain test can be made upon completion of assembly jobs.

In the event of leaks, refer to 97-850.

Continue assembly in opposite order.

A. Sedan

Special tools

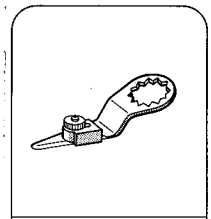

124 589 12 63 00

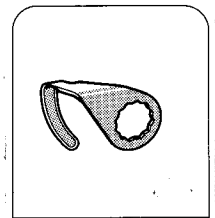

124 589 03 63 00

Conventional tools	e.g. Company, Order no.
Multi-cutter	Chicago Pneumatic D-65366 Geisenheim CP 838–12
Suction lifter	Karl Assfalg KG, Buchstraße 149 D-73525 Schwäbisch Gmünd 602–2
Electric gun with battery	Weiler & Co. Postfach 1269 D-76287 Rheinstetten, Baden Pressofix 108, Electronic, SDF–108 E

Parts

Repair pack for glazing windshield or back window glass	124 670 01 93
MB parting compound	000 986 39 36

Scope

1 Coating brush
2 Glass primer
3 Glass activator (cleaner)
4 Betaseal glueing material 150 ml
5 Coating nozzles
6 Cutting wire, spacing blocks, spacing angle brackets, spacing rubber and cleaning cloth
7 Betaseal glueing material 300 ml

Removal

1 Remove trim on rear pillar left and right (68–449, do not unscrew end fitting of belt).

2 Disconnect electric connections on lefthand and righthand rear pillar.

3 Disconnect headlining at holding rail on back window, top.

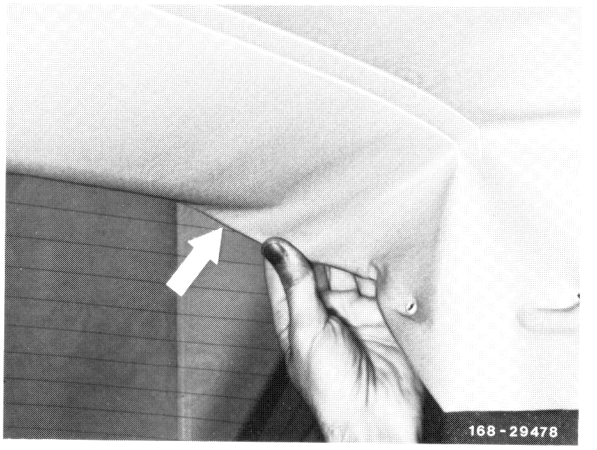

4 Remove trunk lid (88–500).

5 Protect corners at pane cutout of body against damage by means of adhesive tape.

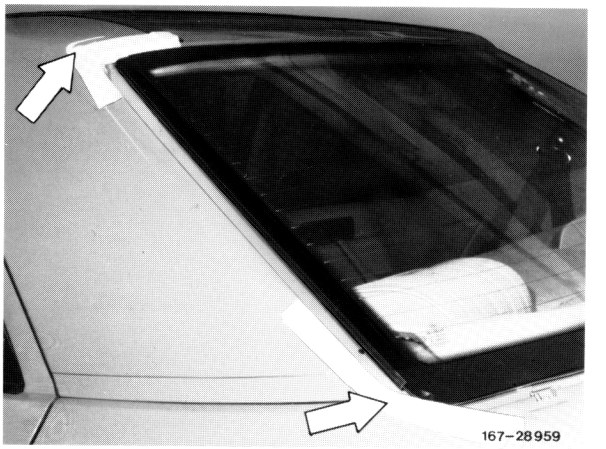

6 Force off lower cover.

Note: To make sure that the cover is not damaged when forced off, position plastic wedge only in range of clips (7 each).

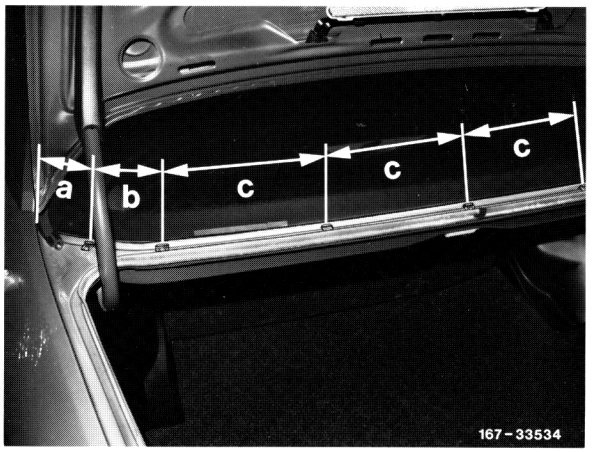

a = 100 mm
b = 120 mm
c = 260 mm

7 Unscrew screw at left and right.

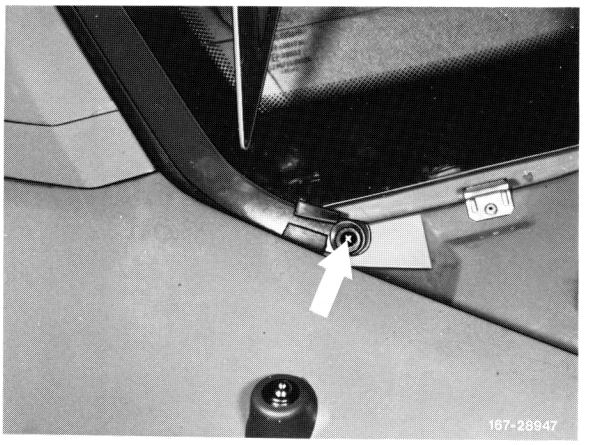

8 Locate multi-cutter available for use (air supply interrupted).

9 Clamp knife no. 1 into multi-cutter and set stop as required (dimension a = 18 mm).

10 Moisten oil stone, connect air supply and sharpen both sides of knife with machine switched on.

11 Switch off multi-cutter.

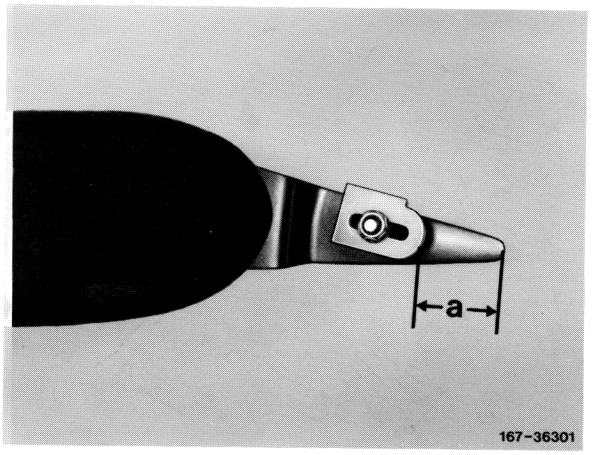

Attention!
Wear goggles.

12 Move into operating position on rear seat.

13 Switch on multi-cutter, plunge-cut with knife at starting point "A" and cut through adhesive bead, guiding knife in parallel with glass, in upward direction toward vehicle center.

14 Switch off multi-cutter.

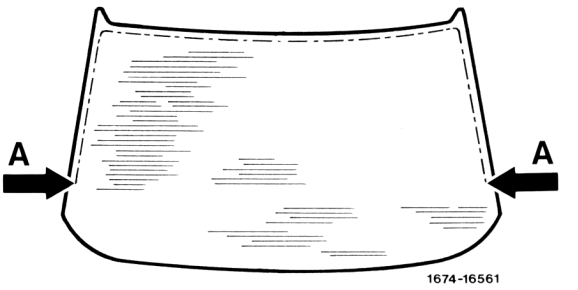

15 Change knife no. 1 for knife no. 2 and sharpen (item 9).

16 Push connecting link aside.

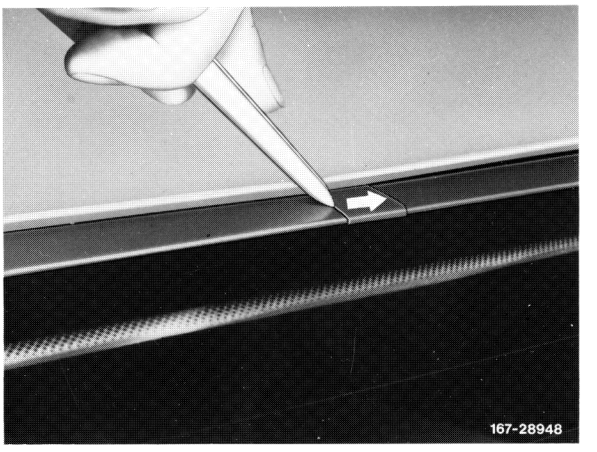

17 Push glass pane in upper range carefully in outward direction and slip plastic wedges in-between glass and glue flange.

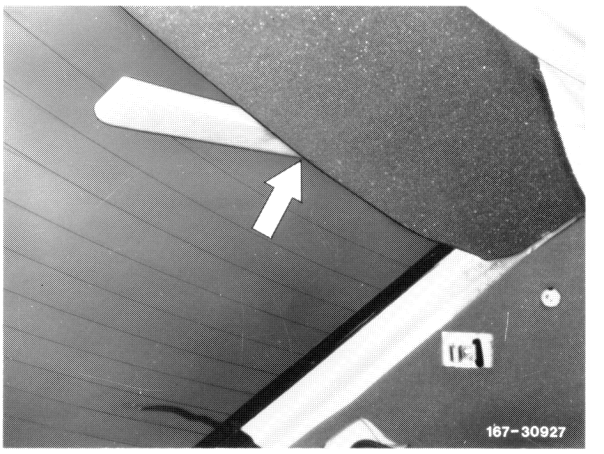

18 Place rubber lip at upper corners over trimstrip.

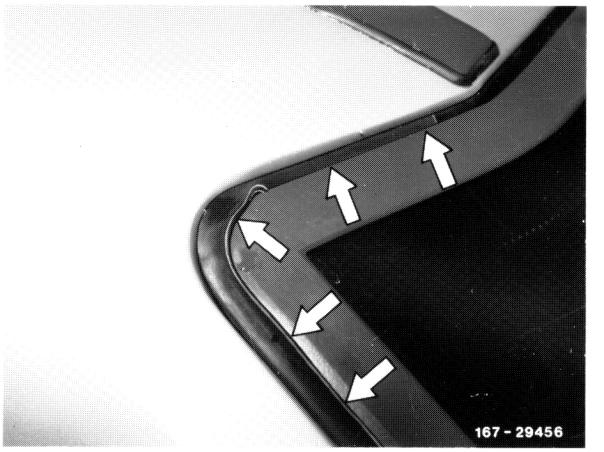

19 Push rubber cover on trimstrip aside and apply soap solution all-around between rubber and body.

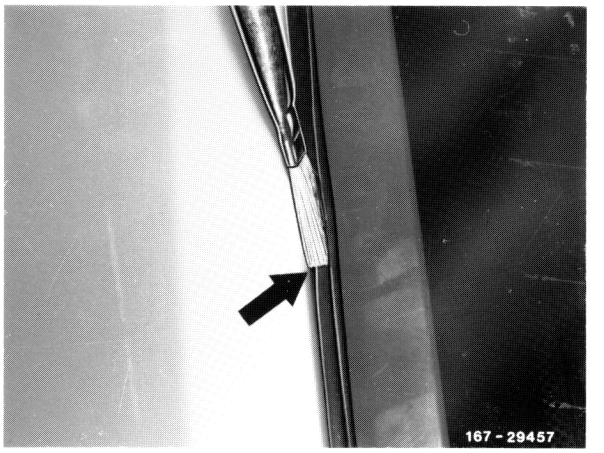

20 Starting from below, push trimstrip with punch outwards up to upper corner. Then push trimstrip at top from connecting link toward corner in upward direction away from glass pane.

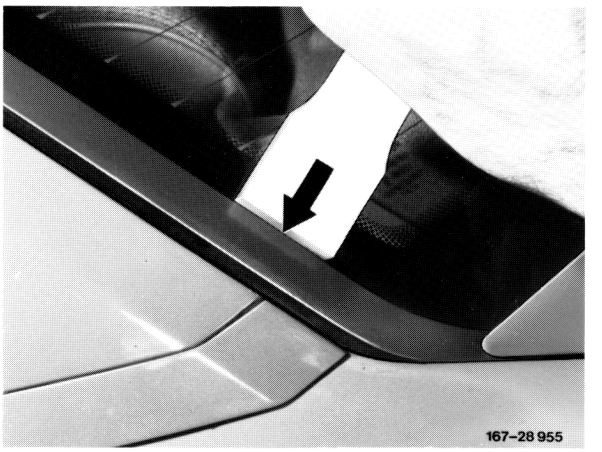

21 Pull out trimstrip at top starting at center. Remove link (arrow).

22 Remove wedges (item 20).

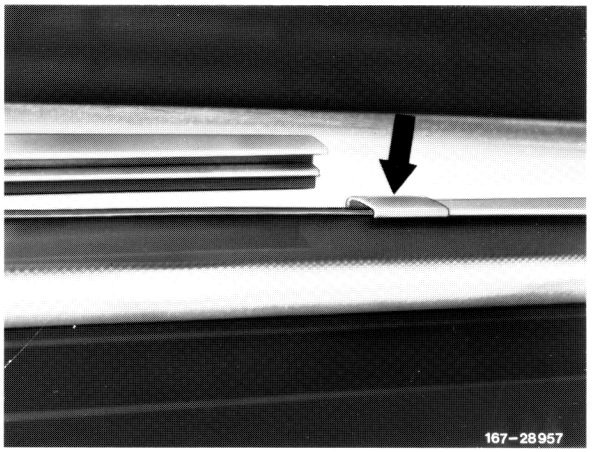

23 Move into operating position adjacent to rear fender.

24 Lift glass in upper range from body and introduce knife from outside into gap.

25 Switch on multi-cutter and cut through glueing bead, beginning at starting point "A".

Note: If the glueing material cannot be completely cut through with the available knives, use cutting wire.

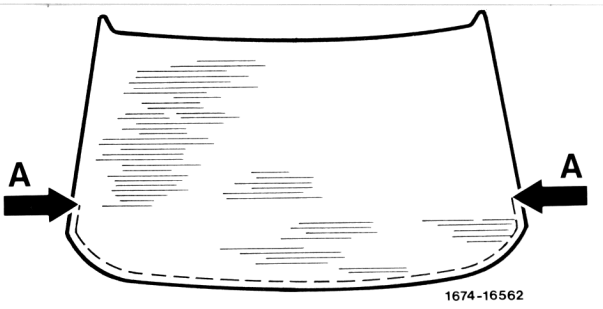

26 Remove pane with suction lifter.

Installation

27 Cut off remaining glue material on body flange with blade no. 2. Max. 2 mm may remain. Pull off loose glue material (residual pieces not completely cut off).

28 Do not cover damaged paint spots on body flange with glue material, brush over with priming pencil part no. 000 986 06 50.

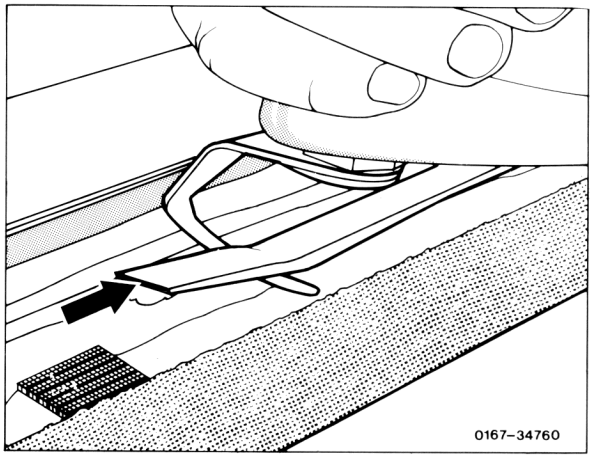

Shown on model 124 coupe

29 Prepare glass for glazing.

When using the previously installed glas pane:

30 Cut off residual glueing material on glass down to a few tenths of a millimeter.

31 Pull off loose glueing material and rub off glueing range with non-fluffy rag. Do not use cleaning compound.

32 Slip profilated rubber on pane.

Note: Serrations should be at inside of pane.

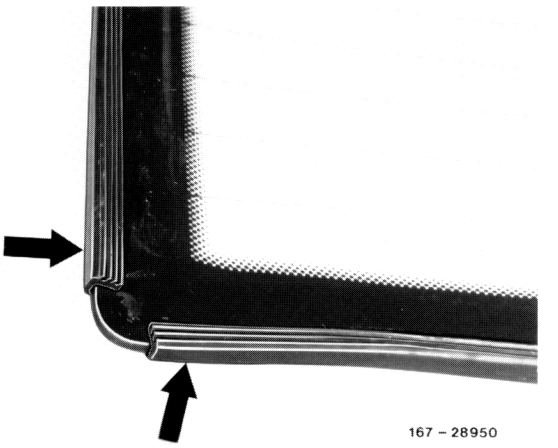

33 Slip rubber cover on trimstrip.

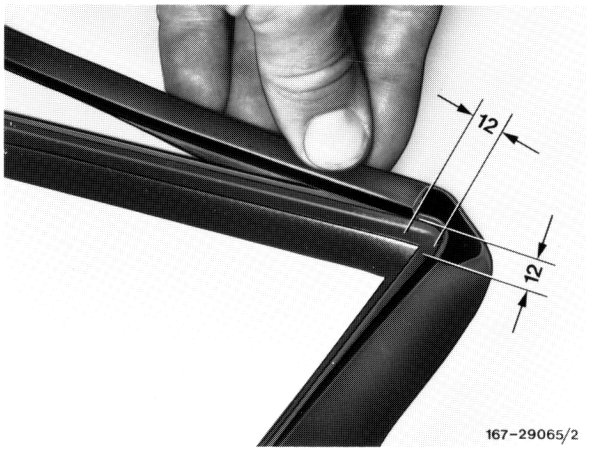

34 Coat holding groove in trimstrip with soap water and push trimstrip on pane, starting at upper corner.

Attention!
Keep glueing range free of soap water so that perfect glueing is assured. After mounting trimstrip, remove excessive soap water.

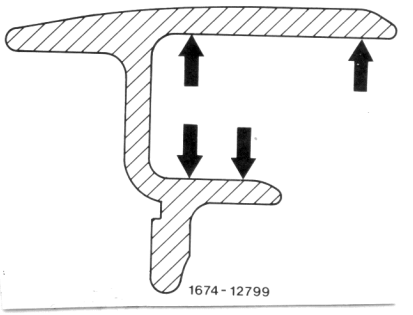

20017

35 Apply parting compound to rubber cover and trimstrip (range D).

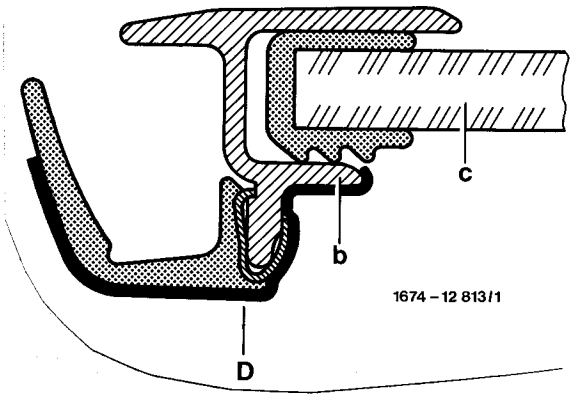

b = Trimstrip
c = Pane

36 Repair damaged primer coat.

37 Let primer air-dry for at least 5 minutes.

When installing a new glass pane:

Check pane for scratches and damage. Apply glass activator (cleaner) from repair pack with non-fluffy rag in glueing range, then rub dry with a second rag.

Attention!
Do not use cleaning compound in visibility range of glass, since this may lead to clouding.

38 Preassemble trimstrip on glass (items 35–38).

39 Shake primer energetically and apply within glueing range (max. width 30 mm).

40 Let primer air-dry for at least 5 minutes.

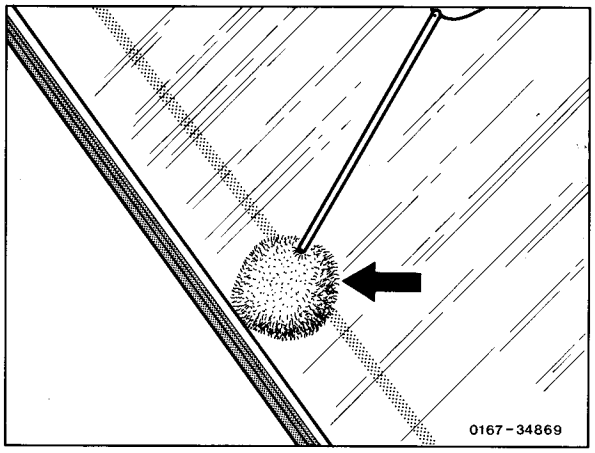

41 Insert rubber pads 10x20x13 from repair pack into pane cutout, below.

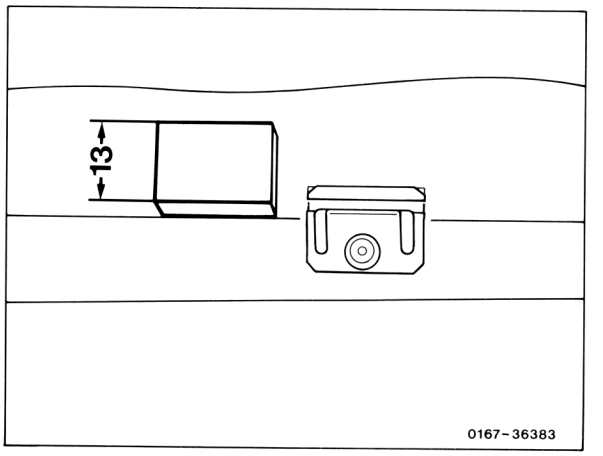

Assembly note

Prior to applying glue, center glass pane in body opening. For this purpose, mount suction lifter, position pane with second mechanic assisting at the rubber pads (item 43) and align. Glue on two adhesive tape strips, cut through at upper edge of pane (arrow) and again remove pane.

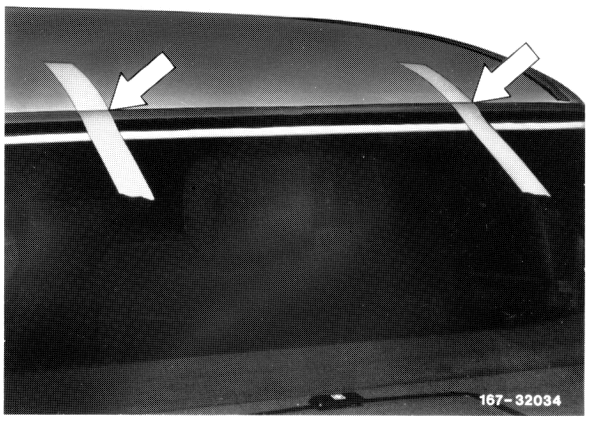

42 Remove cartridge with glue from repair pack, cut through diaphragm, remove cartridge bottom and dump chemicals. Screw on application nozzle and insert cartridge in processing gun.

Guide nozzle along on residual glueing material on body flange, while simultaneously pressing glue out (height of glue bead approx. 10 mm). Hold cartridge gun on lateral flanges in joining direction of pane (A = approx. 50°).

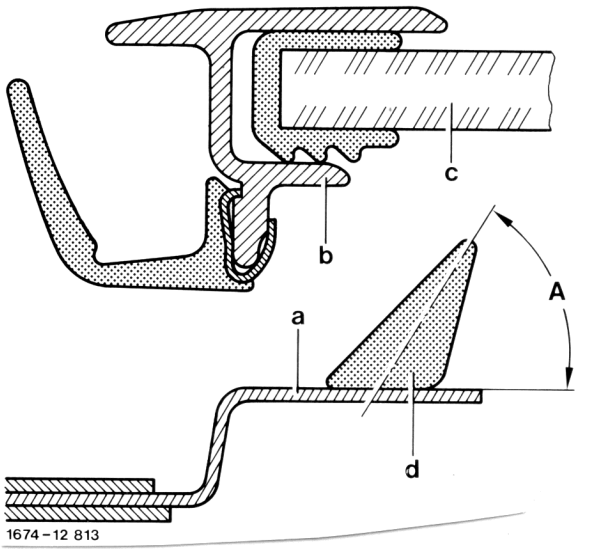

a Body flange
b Trimstrip
c Pane
d Glue bead
A approx. 50°

43 Place pane on lower rubber pads, align, place on glue bead and push down all-around until the trimstrip is flush with body.

Attention!
Pane must be mounted within 15 minutes, since otherwise the adhesive characteristics of the glueing material will be impaired.

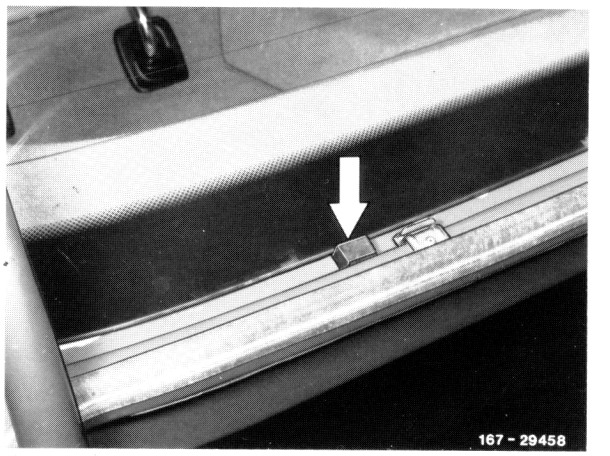

44 Screw on trimstrip below.

45 Open crank window on driver's door so that the rear window pane cannot be pushed outward by the accumulating air while closing the doors during the drying period.

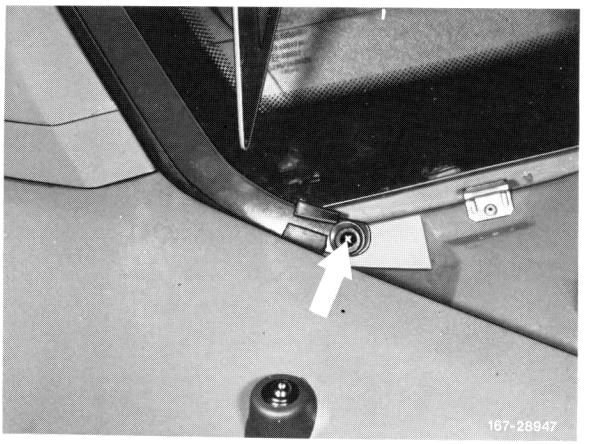

46 Remove rubber pads.

47 For further installation proceed vice versa.

Note: The drying time (stationary period of vehicle) amounts to approx. 4 hours. The rain test can be made upon completion of assembly jobs.

In the event of leaks, refer to 97–850.

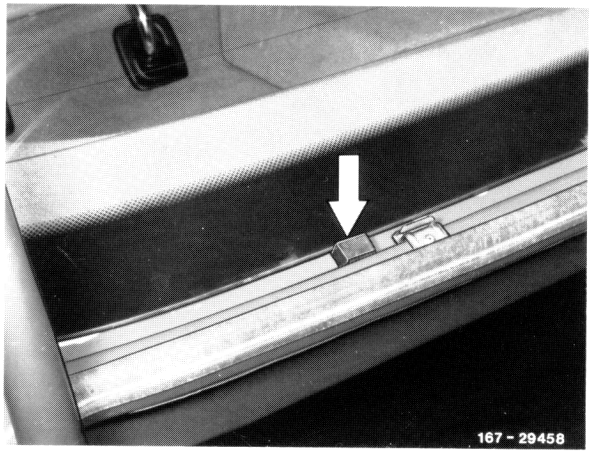

B. Coupe

Special tool

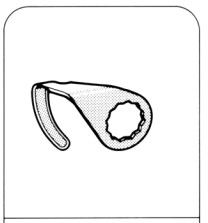

124 589 03 63 00

Conventional tools	e.g. Company, Order no.
Multi-cutter	Chicago Pneumatic D-65366 Geisenheim CP 838–12
Suction lifter	Karl Assfalg KG, Buchstraße 149 D-73525 Schwäbisch Gmünd 602–2
Electric gun with battery	Weiler & Co. Postfach 1269 D-76287 Rheinstetten, Baden Pressofix 108, Electronic, SDF–108 E

Parts

Repair pack for glazing windshield or back window glass	124 670 01 93

Scope

1 Coating brush
2 Glass primer
3 Glass activator (cleaner)
4 Betaseal glueing material 150 ml
5 Coating nozzles
6 Cutting wire, spacing blocks, spacing angle, spacing rubber and cleaning cloth
7 Betaseal glueing material 300 ml

Removal

1 Remove trim on rear pillar left and right (68–449, do not unscrew end fitting of belt).

2 Disconnect electric connections on lefthand and righthand rear pillar.

3 Protect pane cutout of body against damage, by means of adhesive tape.

4 Remove ornamental frame on back window. (67–220).

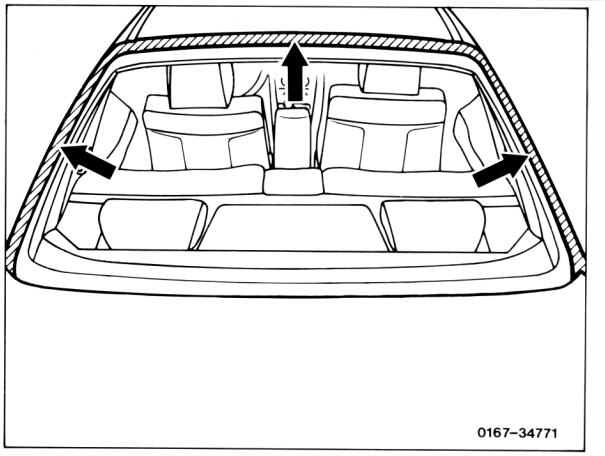

5 Pull molded rubber strip from pane.

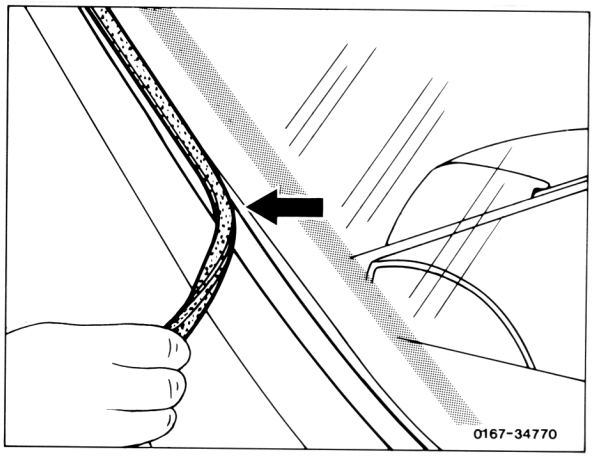

6 Pull making from body.

7 Remove trunk lid (88–500).

8 Remove expanding rivet on trim in trunk, left and right. Disengage springs on trunk lid hinges.

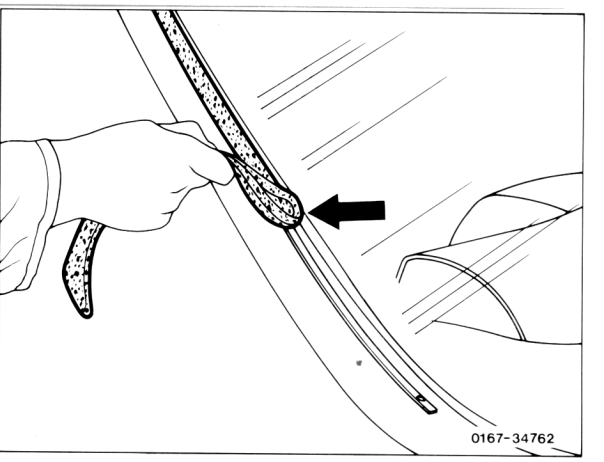

9 Locate multi-cutter available for use (air supply interrupted).

10 Clamp knife into multi-cutter.

11 Moisten oil stone, connect air supply and sharpen both sides of knife with machine switched on.

12 Switch off multi-cutter.

Attention!
Wear goggles.

13 Move into operating position adjacent to rear fender.

14 Switch on multi-cutter, plunge-cut knife at starting point "A" and cut through adhesive bead all-around with knife guided in parallel with glass.

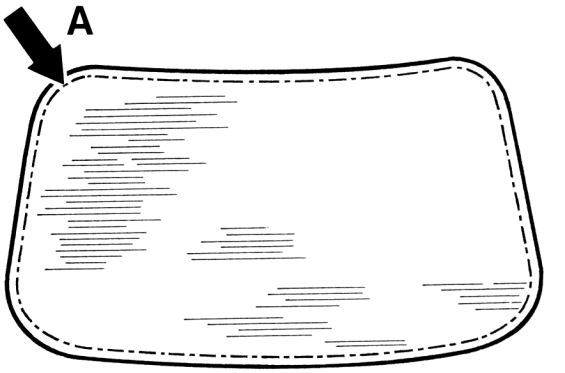

Note: If adhesive material cannot be completely cut through with the available knives, use cutting wire.

15 Lift off glass with suction lifter.

Installation

16 Cut off residual glueing material on body flange with knife. Max. 2 mm may remain. Pull off loose glueing material (not completely cut-off residual pieces).

17 Paint damage on body flange not covered by glueing material with priming pencil, part no. 000 986 06 50.

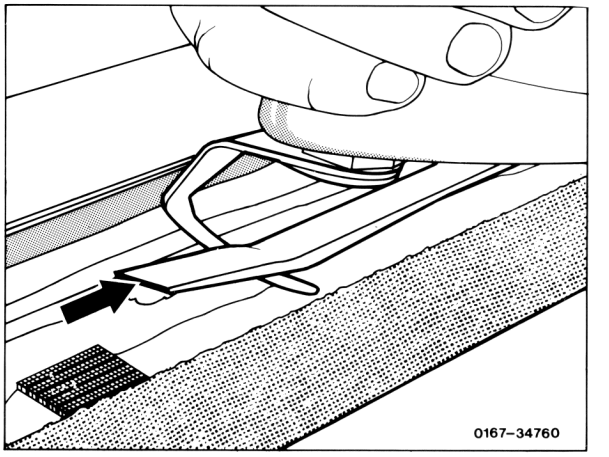

18 Prepare pane for glazing.

When using the previously installed glass pane:

19 Cut off residual glueing material on glass down to a few tenths of a millimeter.

20 Renew holding strips, if damaged.

21 Pull off loose glueing material and rub glueing range with non-fluffy rag. Do not use cleaning compound.

22 Mount molded rubber strip on pane.

Note: Serrations should be on inner side of pane.

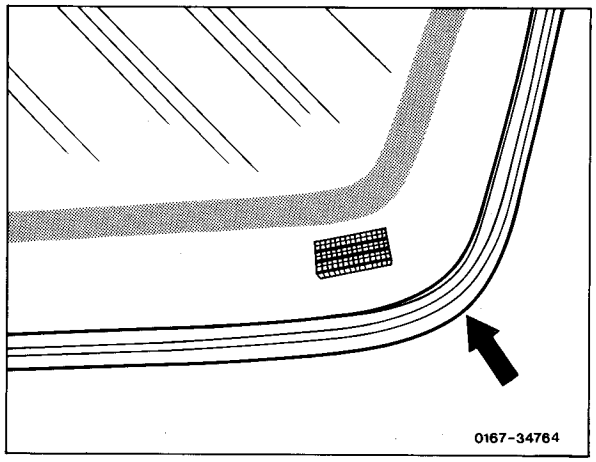

23 Coat holding groove in trimstrip with soap solution and press trimstrip on pane starting at upper corner.

Attention!
Keep glueing range free of soap solution to guarantee perfect glueing. Remove excess soap solution after mounting trimstrip.

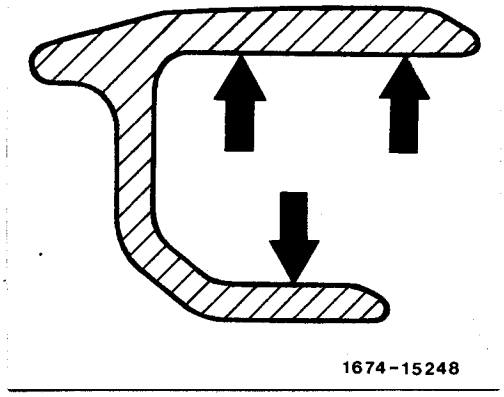

24 Repair damaged primer layer.

25 Let primer air-dry for min. 5 minutes.

When installing a new glass pane:

Note: On spare part glass panes, the holding strips are already glued on.

Check pane for scratches and damage. Apply glass activator (cleaner) from repair pack with non-fluffy rag in glueing range, then rub dry with a second rag.

Attention!
Do not use cleaning compound in visibility range of glass, since this may lead to clouding.

26 Premount trimstrip on glass pane (items 22–23).

27 Shake primer energetically and apply (max. width 30 mm).

28 Let primer air-dry for at least 5 minutes.

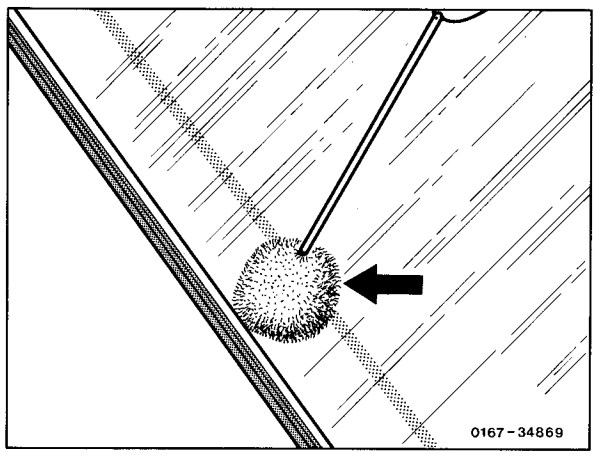

29 Renew holding strips (4 each) on body top which may have suffered damage.

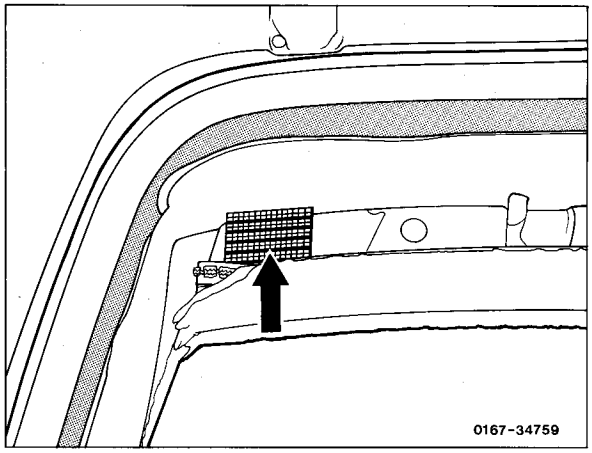

30 Insert rubber pads 10x20x13 from repair pack into glass cutout, below (arrow).

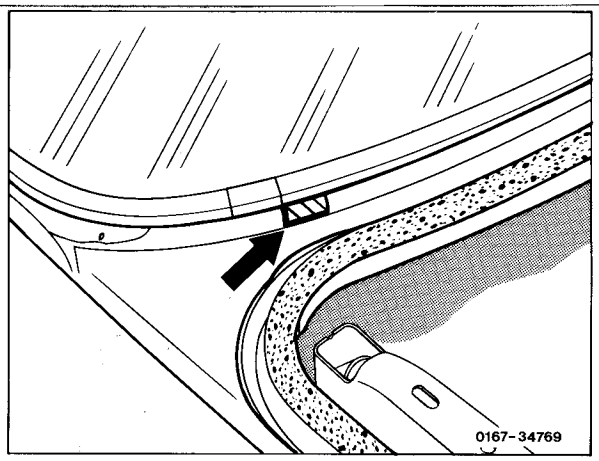

Assembly note

Prior to applying glue, center glass pane in body opening. For this purpose, mount suction lifter, position pane with second mechanic assisting at the rubber pads (item 30) and align. Glue on two adhesive tape strips, cut through at trimstrip (arrow) and remove pane again.

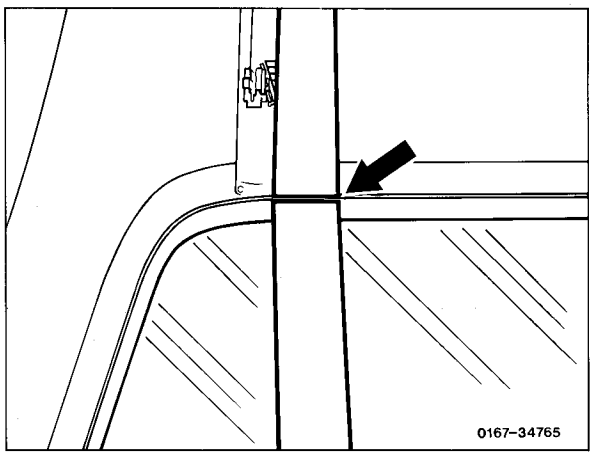

Note: To permit displacement of windshield glass during alignment, mask holding strip with adhesive tape.

Pull off adhesive tape prior to inserting windshield pane.

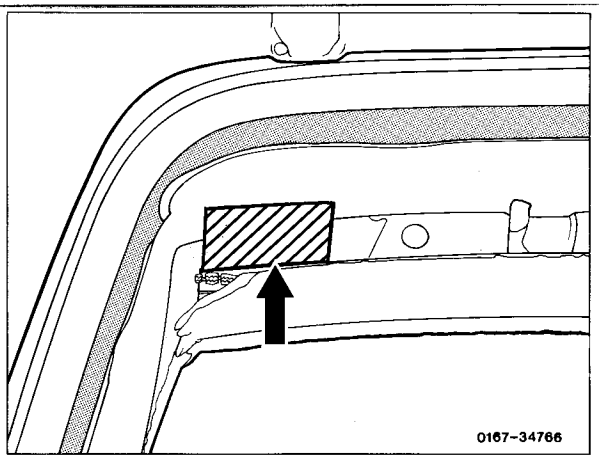

31 Apply masking.

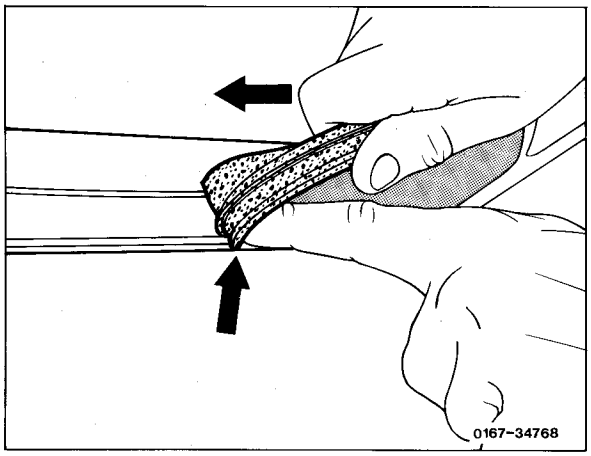

32 Check molded rubber strip in pane cutout below, renew rubber, if damaged.

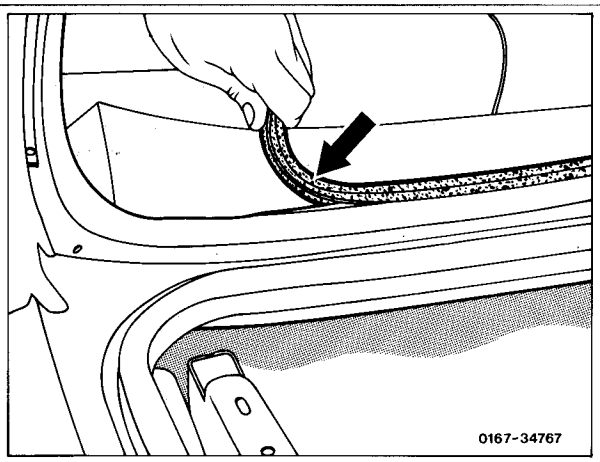

33 Remove cartridge with glue from repair pack, cut through diaphragm, remove cartridge bottom and dump chemicals. Screw on application nozzle and insert cartridge in processing gun.

Guide nozzle along on residual glueing material on body flange, while simultaneously pressing glue out (height of glue bead approx. 10 mm). Hold cartridge gun on lateral flanges in joining direction of pane (A = approx. 50°).

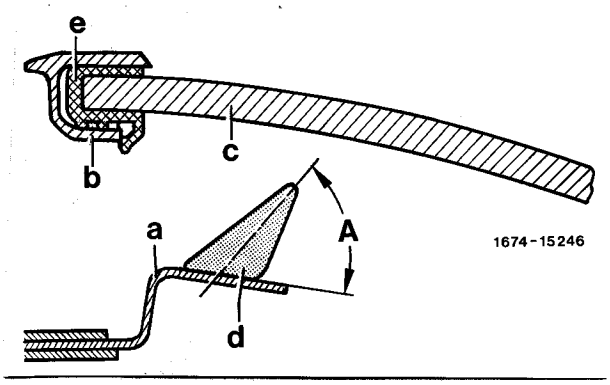

a Body flange
b Trimstrip
c Pane
d Glue bead
e Molded rubber
A approx. 50°

34 Place on lower rubber pads (item 30) and align according to adhesive tape strip at top. Place on adhesive bead and push into holding strips.

Press against pane below.

Note: Minimum distance from body is assured by holding strip at top and by molded rubber strip below.

Attention!
Pane must be mounted within 15 minutes, since otherwise the adhesive characteristics of the glueing material will be impaired.

35 Remove rubber pads at end of drying period.

36 For further installation proceed vice versa.

Note: The drying time (stationary period of vehicle) amounts to approx. 4 hours. The rain test can be made upon completion of assembly jobs.

In the event of leaks, refer to 97–850.

A. Sedan

Special tool

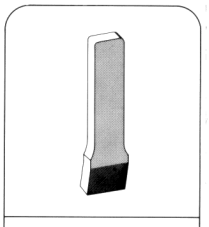

116 589 07 59 00

Removal, installation

1 Force off lower covering.

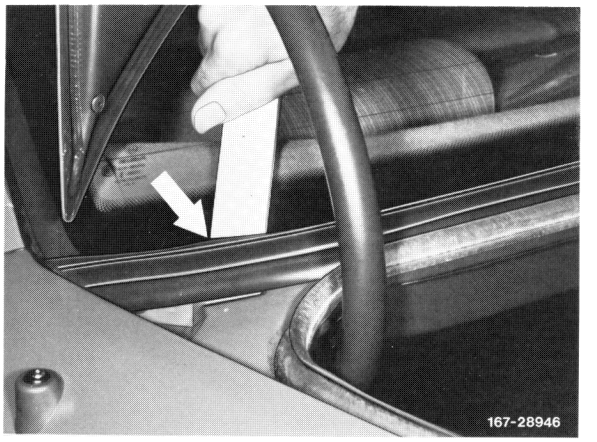

Note:
To make sure that the covering is not damaged when forced off, position plastic wedge in range of plug-in clips (7 each) only.

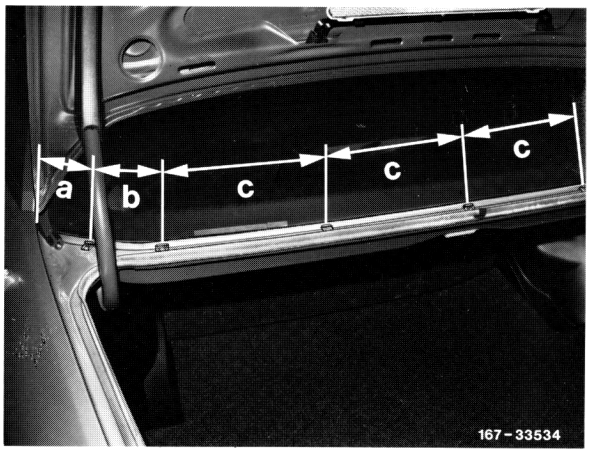

a 100 mm
b 120 mm
c 260 mm

2 Unscrew screw.

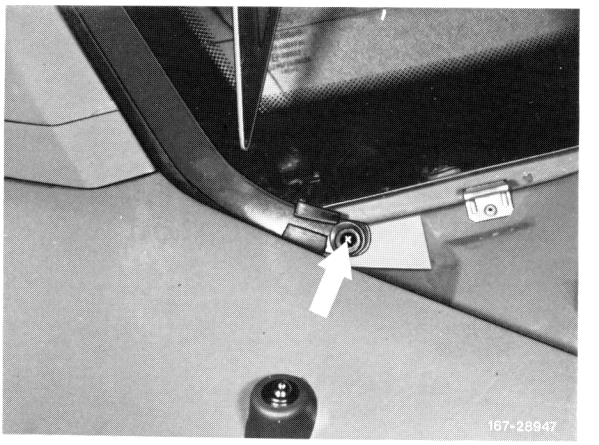

3 Push connecting link aside.

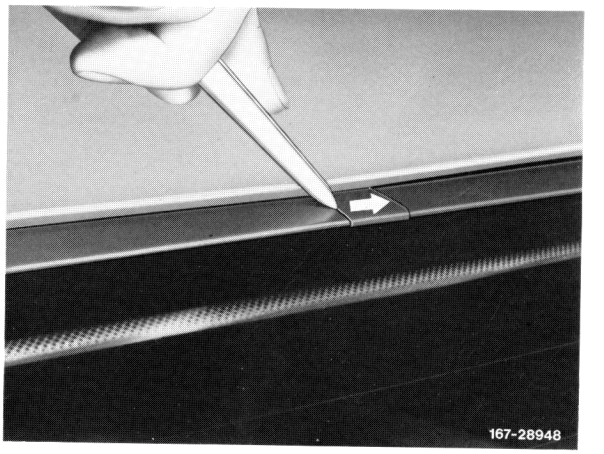

4 Place rubber lip on upper corners above trimstrip.

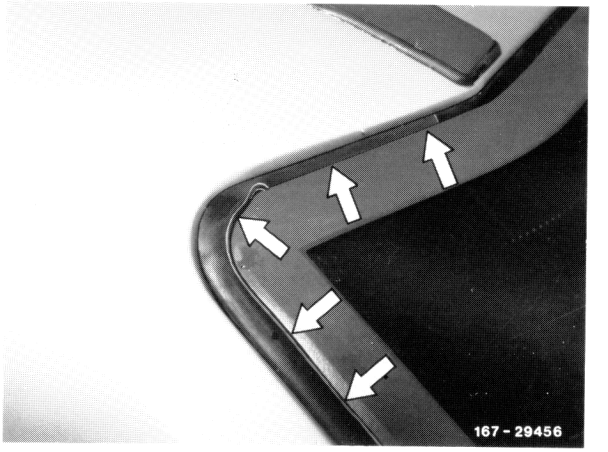

5 Push rubber cover on trimstrip aside and apply soap water all-around between rubber and body.

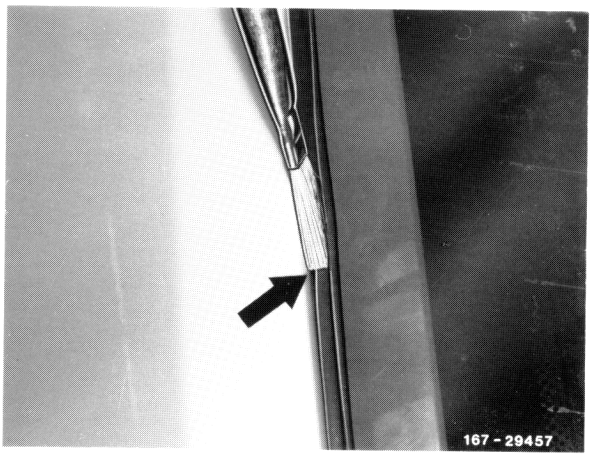

6 Push trimstrip outwards starting from below up to upper edge with drift. Then force trimstrip at top from connecting link toward corner in upward direction from pane.

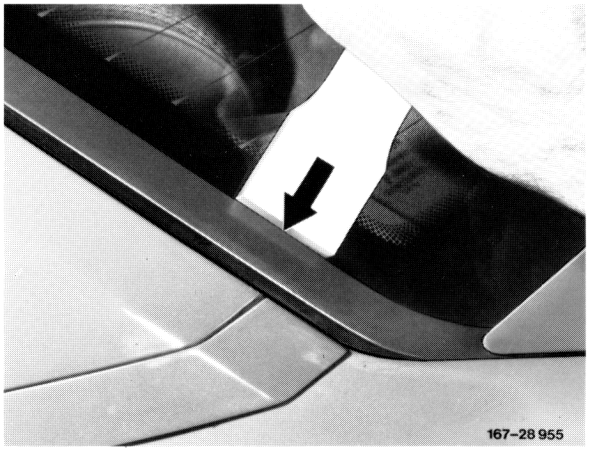

Note: If a trimstrip is stuck, apply counterhold with plastic wedge so that the trimstrip cannot twist.

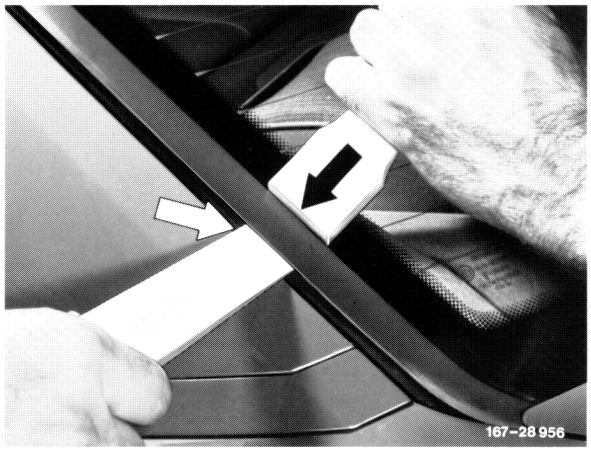

7 Pull out trimstrip at top starting from center. Remove link (arrow) on respective trimstrip half prior to pulling out.

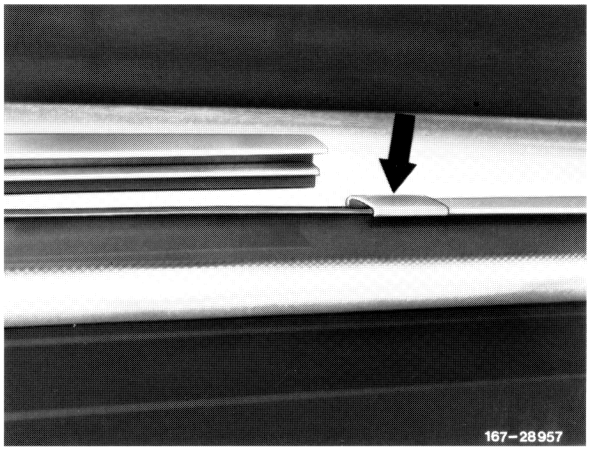

8 Coat holding groove in trimstrip with soap water and slip trimstrip starting from corner on pane.

9 For further installation proceed vice versa.

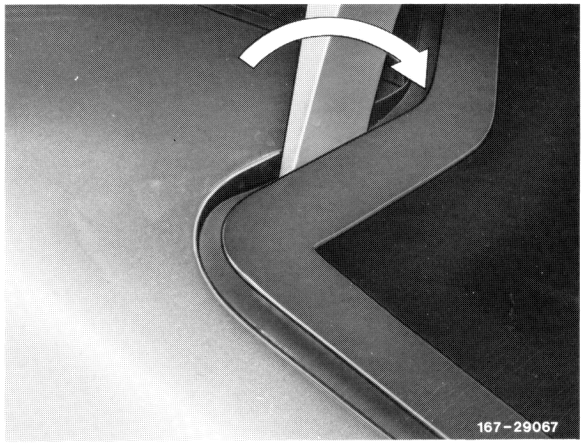

B. Coupe

Special tool

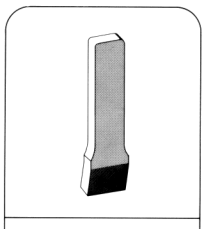

Removal and installation

1 Push connecting links at top and bottom aside.

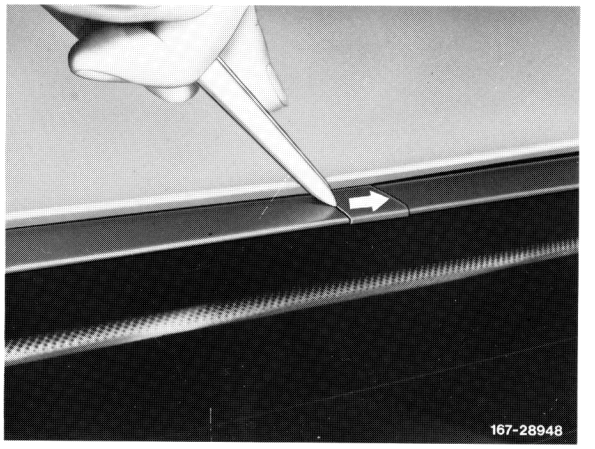

2 Force trimstrip left and right from direction of center (top) from pane by means of special tool part no. 116 589 07 59 00.

3 Force off trimstrip below.

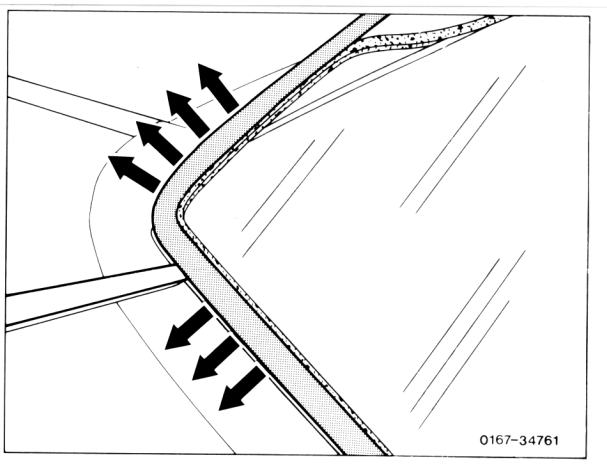

Note: If trimstrip is stuck, apply counterhold with plastic wedge so that the trimstrip will not be twisted.

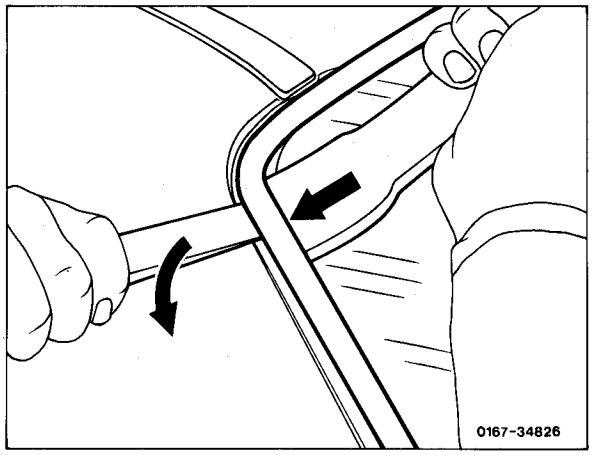

4 Plug molder rubber strip onto pane.

Note: Serrations should be at inside of pane.

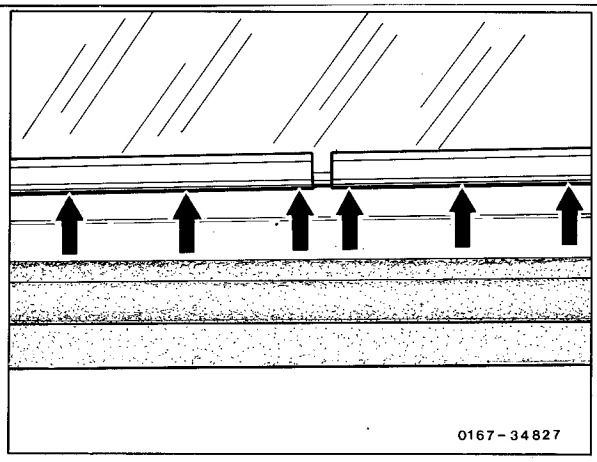

8 Coat holding groove in trimstrip with soap solution and press trimstrip on pane from direction of corner.

9 For further installation proceed vice versa.

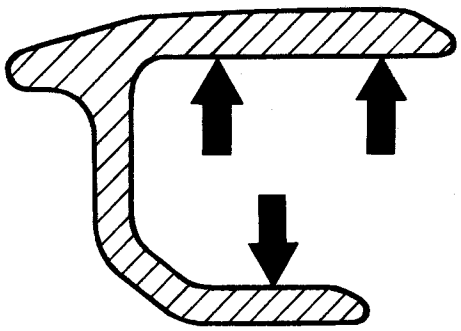

Removal

1 Remove steering wheel (Group 46).

2 Remove cover for loudspeaker left and right (68–105).

3 Remove instrument cluster (Group 54).

4 Remove cover under instrument panel (68–150).

5 Remove reveal moldings at left and right (68–405).

6 Unscrew nut on driver's side outside.

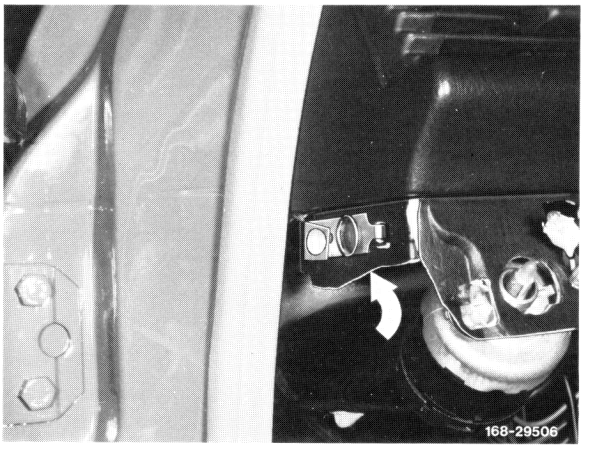

7 Unscrew screw in loudspeaker cutout left and right.

8 Pull out air nozzle on driver's side outside.

9 With loudspeakers installed, separate connecting cable at plug coupling.

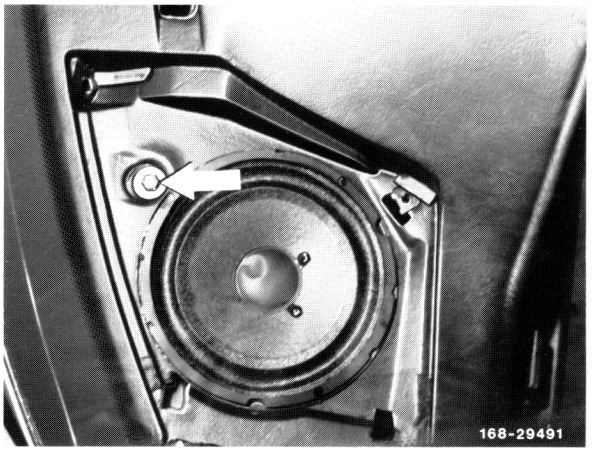

10 Unscrew adjusting screw on connecting linkage of fresh air flap (hex. socket 4 mm).

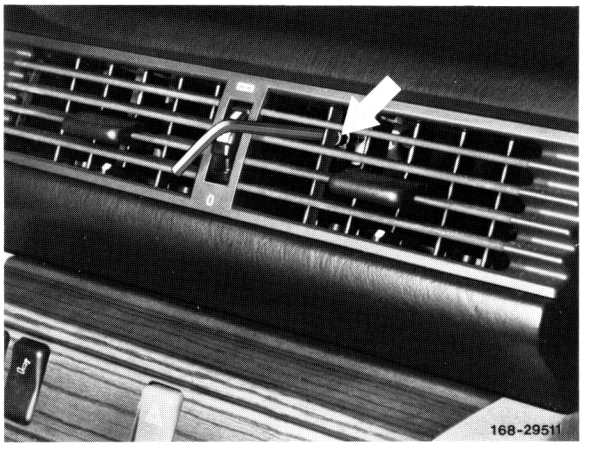

11 Pull off operating switch for blower and air distribution, unscrew nuts (24 mm) and screws.

12 Remove molding.

13 Unscrew screws, pull off electric plug connections and remove plate.

14 Pull off switch for heatable back window, push switch carrier at the right forward out of detent and remove at the left toward the rear.

15 Unscrew nuts on connection from center console to instrument panel and remove instrument panel.

16 Slip instrument panel from the right into left-hand corner on front wall pillar.

Installation

17 Push instrument panel forward and insert defroster nozzles on heater box.

Note: When inserting instrument panel, carefully lift the two center fastening screws over center console.

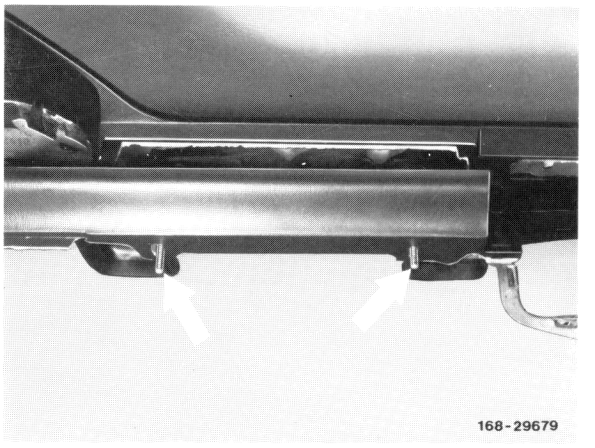

18 Position nut on driver's side outside.

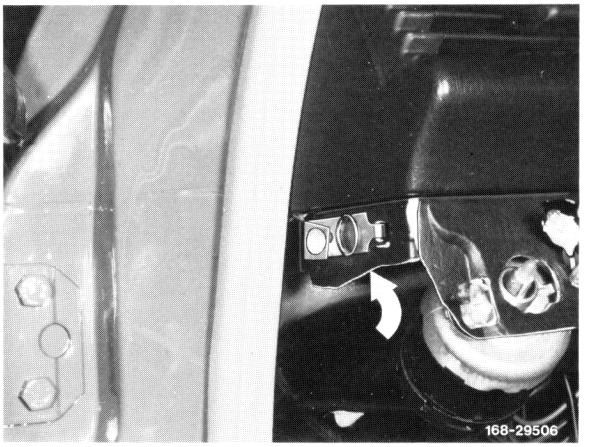

19 Position nuts at connection from center console to instrument panel.

20 Align instrument panel on center console and tighten nuts.

21 Tighten nut outside on driver's side.

22 Insert screw in loudspeaker cutout at left and right and tighten.

23 Insert adjusting screw on connecting linkage of fresh air flap and adjust in such a manner that the flap is closing under a light preload.

24 For further installation proceed vice versa.

Note: When pressing on the control buttons, make sure that the symbols on the control buttons are in agreement with function.

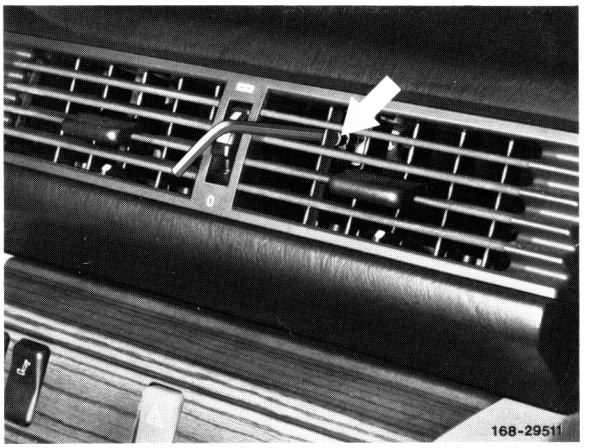

68–105 Removal and installation of cover for speaker

Removal, installation

1 Unclip cover strip and remove.

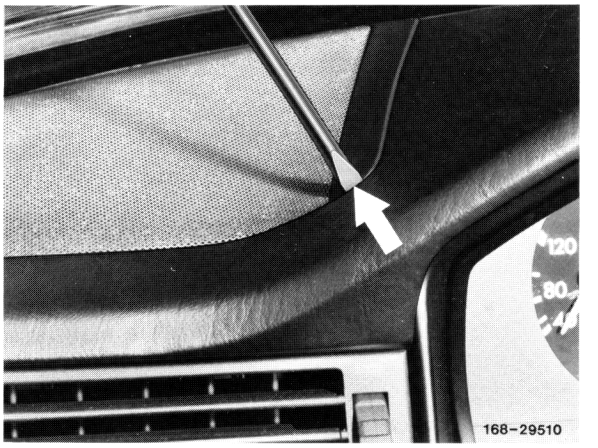

2 Remove screws and take off cover in inward direction.

3 For installation proceed vice versa.

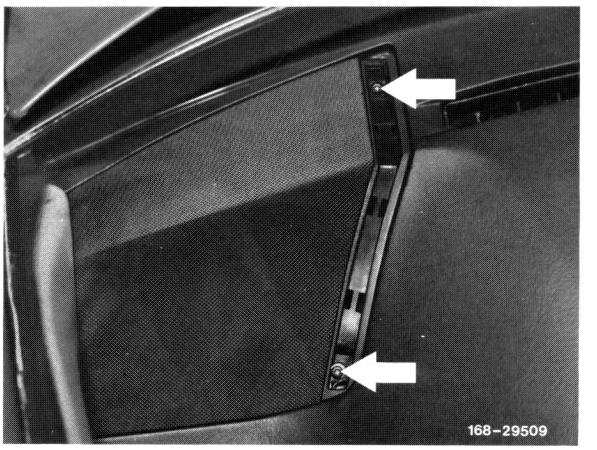

A. Cover at driver's side

Removal

1 Remove floor mat.

2 Unscrew fastening elements and remove front cover above pedal assembly.

3 Disconnect engine hood cable control on opening handle and remove handle.

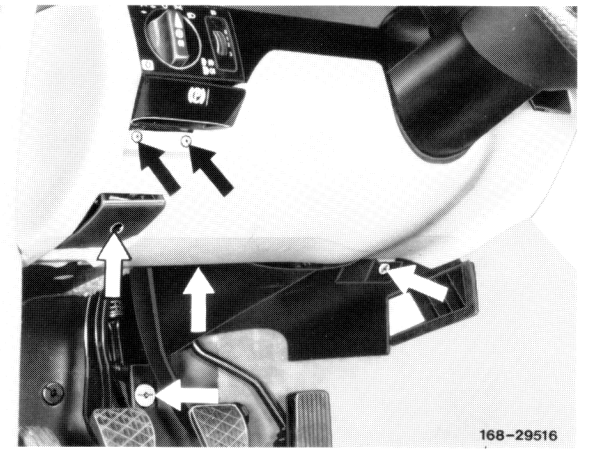

4 Pull off control knob for rotary light switch, unscrew nut (24 mm), slip molding in outward direction, pull off connections for beam range regulator and switch light.

5 Remove cover.

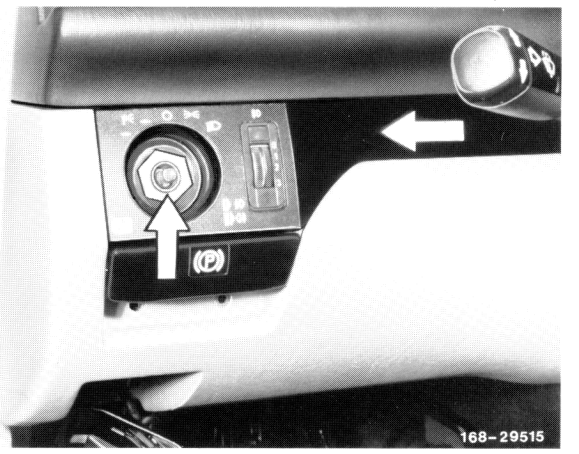

6 Force molding from ignition lock.

7 Remove screw.

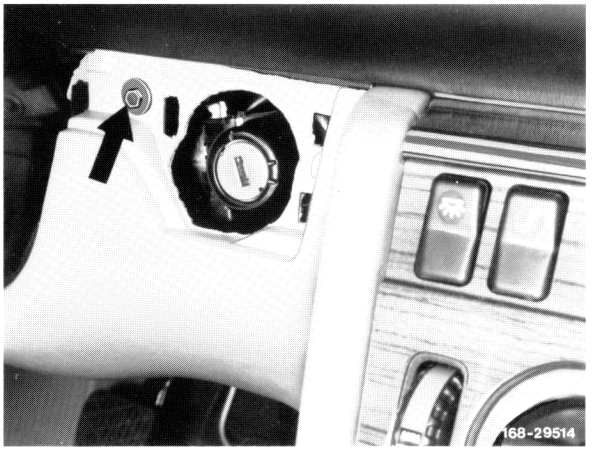

8 Remove screws at left.

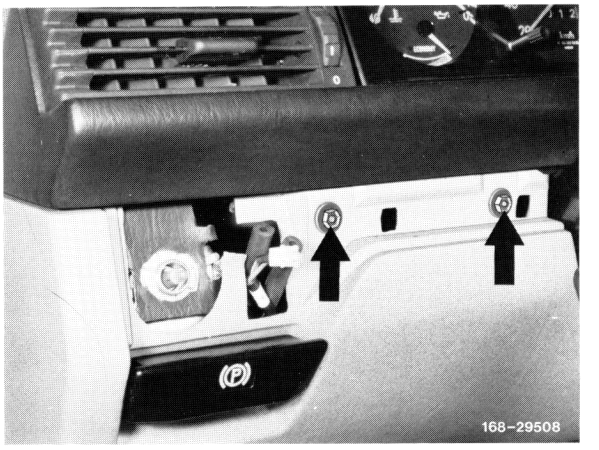

9 Disconnect cable control for parking brake at handle and remove handle.

10 Remove cover.

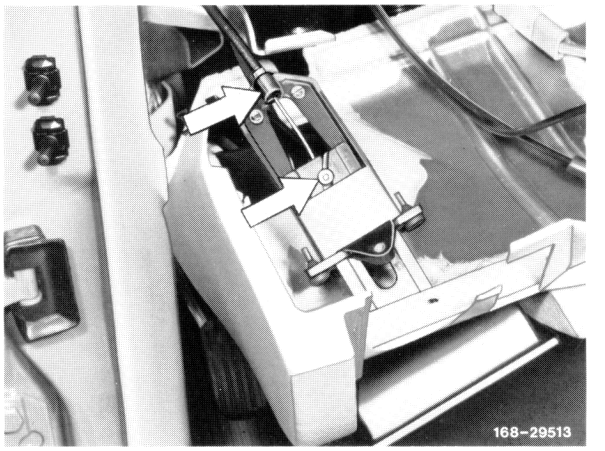

Installation

11 Insert handle for parking brake into cover and engage cable control at handle.

12 Insert cover, making sure that the cover is slipped into the lateral clamp.

13 For further installation proceed vice versa.

Note: Connect vacuum lines on switch for beam range regulator according to color mark on switch.

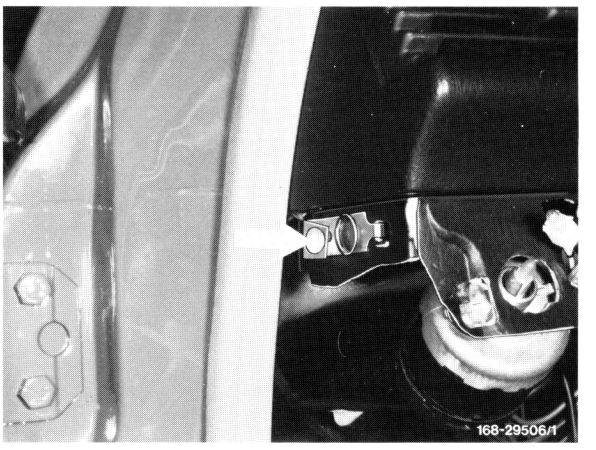

B. Cover on passenger's side

Removal

1 Remove glove box. For this purpose, unscrew both screws on shackle; push out glove box light and expanding rivets. Push glove box at top center approx. 10 mm down, then pull out.

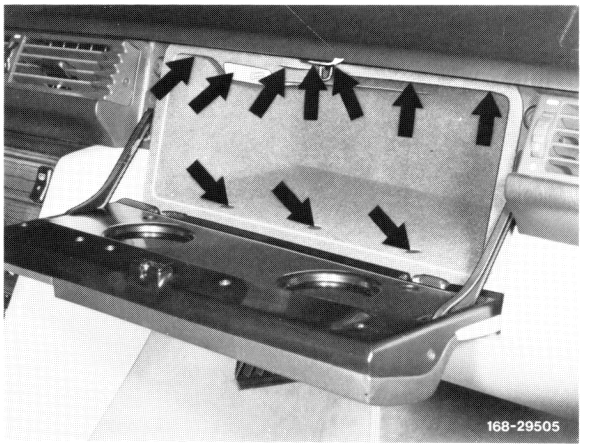

2 Remove screws and take off glove box cover.

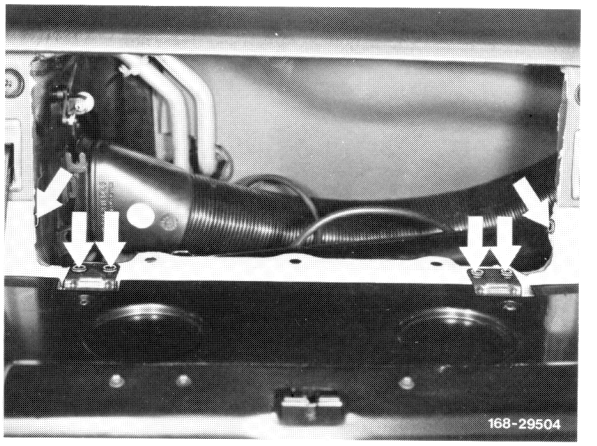

3 Pull out outer air nozzle and remove screws in cutout.

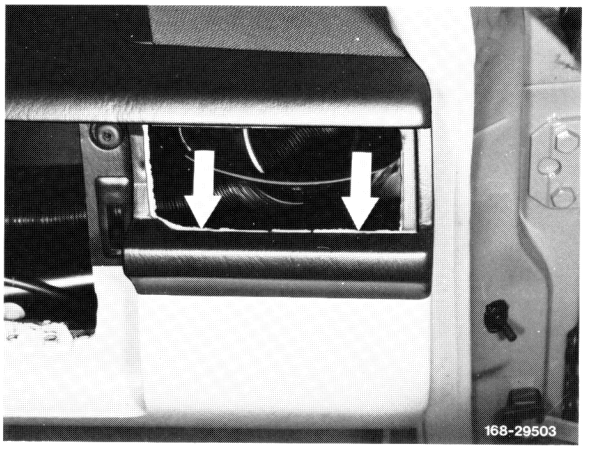

4 Remove screws below.

5 Remove cover toward the rear.

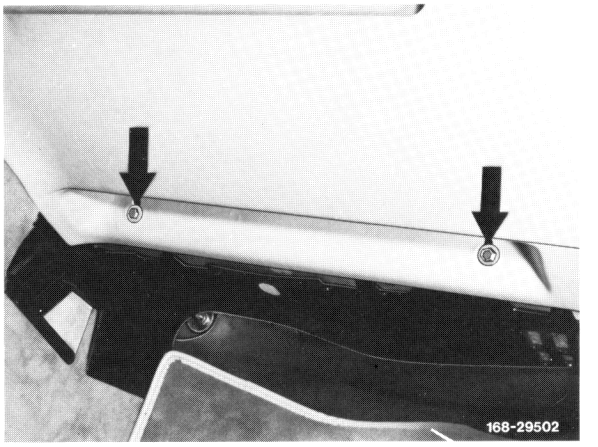

Installation

6 Insert cover, making sure that the cover is slipped into lateral clamp.

7 For further installation proceed vice versa.

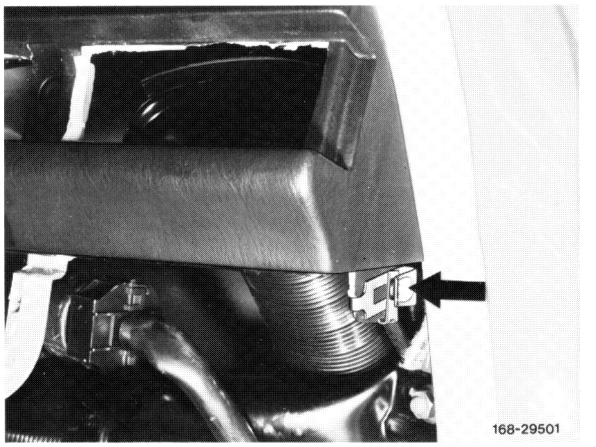

Removal, installation

1 Remove both floor mats and foam parts.

2 Remove cover on shift lever (68–230).

3 Pull off control switch for blower and air distribution. Unscrew nuts (24 mm) and screws.

4 Remove molding.

5 Remove screws, pull off electric plug connections and take off plate.

6 Pull off switch for heatable back window, push switch carrier to the right in forward direction out of detent and remove at the left toward the rear.

7 Unscrew nuts on connection from center console to instrument panel.

8 Push both holding links in downward direction and pull out radio.

9 Separate connections on radio and remove radio.

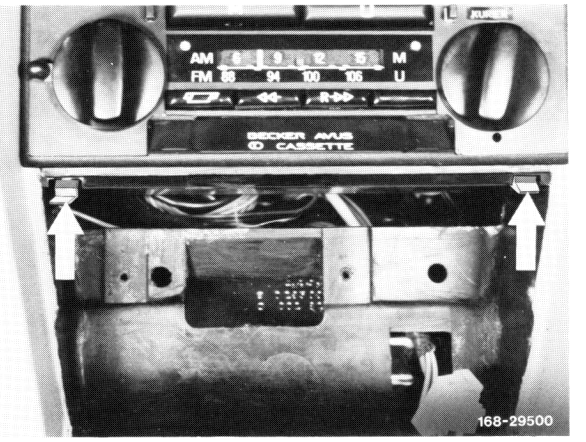

10 Push back detent and take switch plate out of holder.

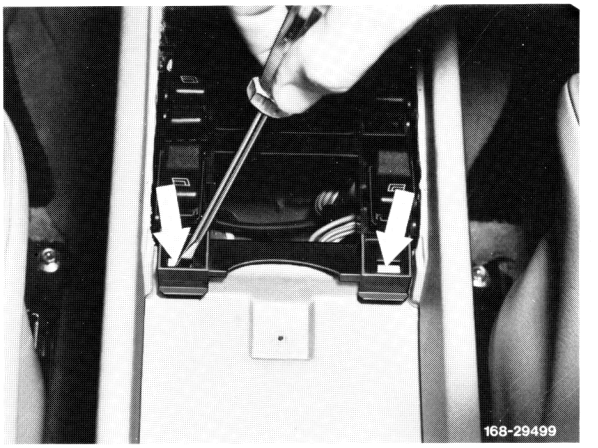

11 Unscrew rear fastening screw.

Note: Screw is countersunk.

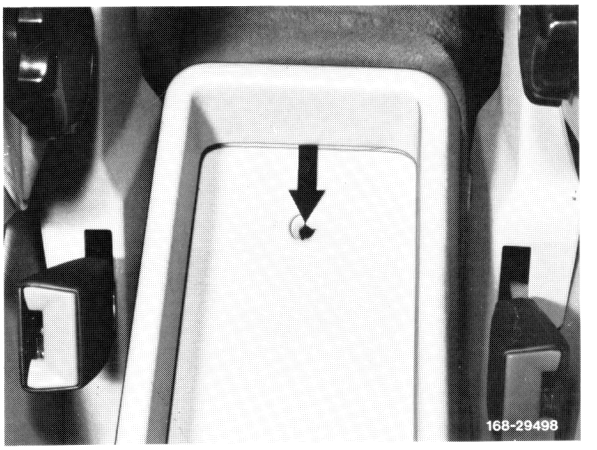

12 Unscrew front fastening screw left and right.

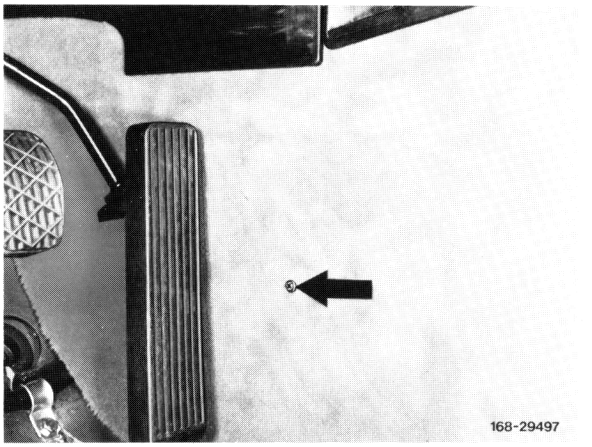

13 Disengage lower holding link of lateral tunnel lining.

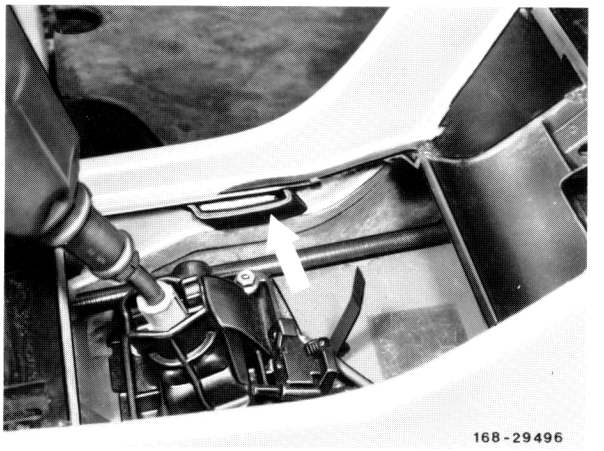

14 Disengage upper holding link of lateral tunnel lining and remove center console toward the rear.

15 Remove lateral tunnel lining toward the rear.

16 For installation proceed vice versa.

68–205 Removal and installation of lateral trim on center console

Self-made tool

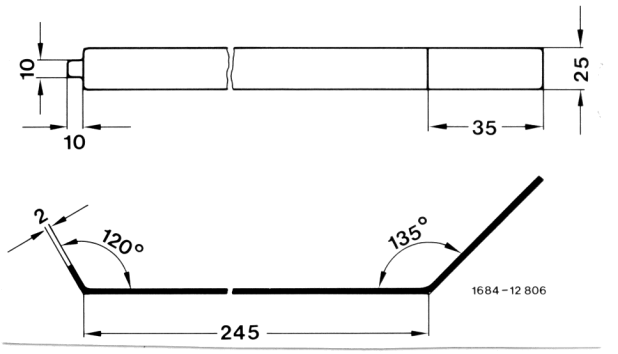

1 Remove floor mat and damping in driver's compartment.

2 Remove floor mat and damping in driver's compartment. Unscrew front fastening screw left and right.

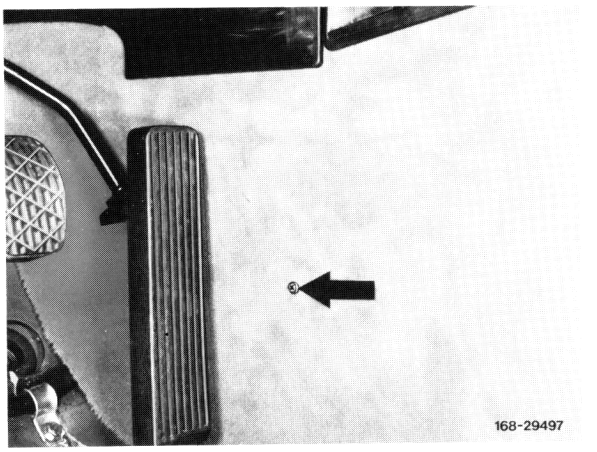

3 Mark location of holding links on center console.

4 Disengage holding links with special tool and pull out tunnel lining.

Note: Use offset end with 135° for removal, the other end with 120° for installation.

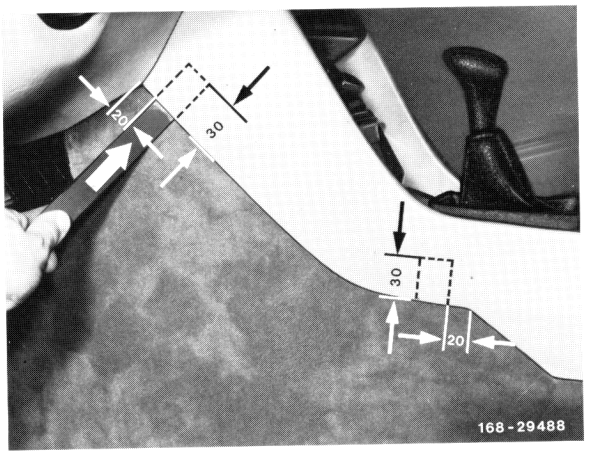

Installation

5 Push holding link outward with special tool and introduce.

6 For further installation proceed vice versa.

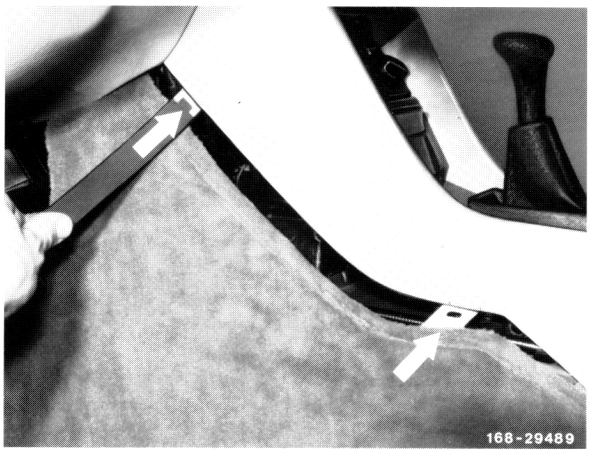

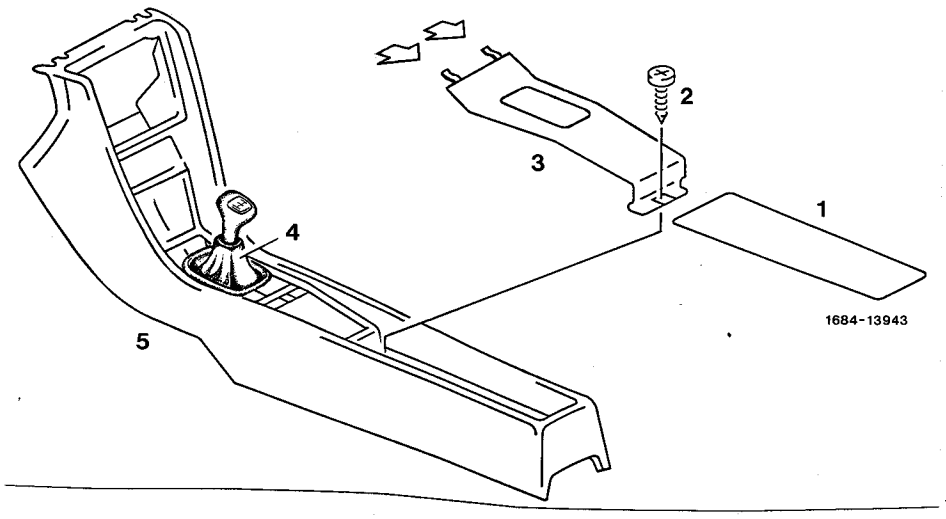

Carpeting (1)	remove
Shift lever sleeve (4)	pull off
Screw (2)	unscrew
Cover (3)	lift at the rear, as well as at cutout of shift lever and remove toward the rear. During installation, pay attention to correct seat of holding cams (arrows).

For further installation proceed vice versa.

Removal

1 Remove sun visor left and right.

2 Disengage inside mirror.

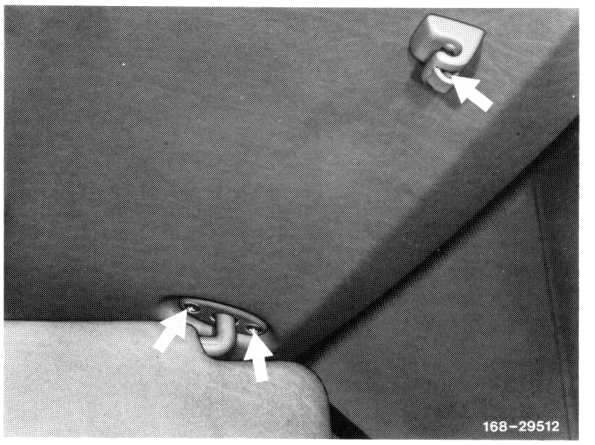

3 Unscrew holding plate for inside mirror, force off dome lamp, sun roof switch and cover above inside temperature sensor (1st version).

4 Pull off electrical connections.

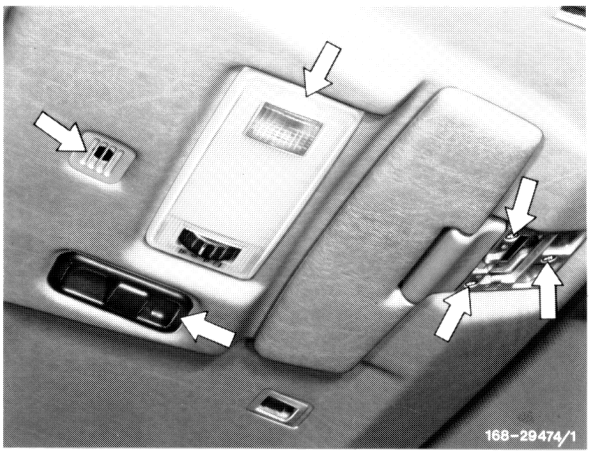

5 Push complete roof operating unit toward the right and out of trim by means of plastic wedge. Pull off plug, remove roof operating unit (2nd version).

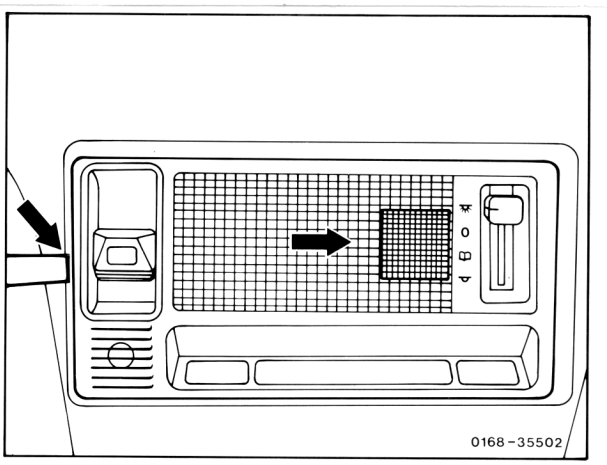

6 Unscrew chrome-plated strip on sun roof cutout.

7 Pull off chafing strip at left and right in range of roof frame trim.

8 Pull trim on roof frame out of lateral reveal moldings toward the rear and remove.

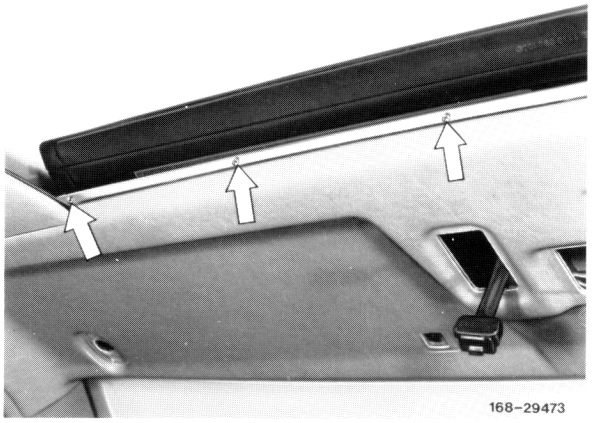

Installation

9 Introduce lateral holder under reveal molding left and right.

10 For further installation proceed vice versa.

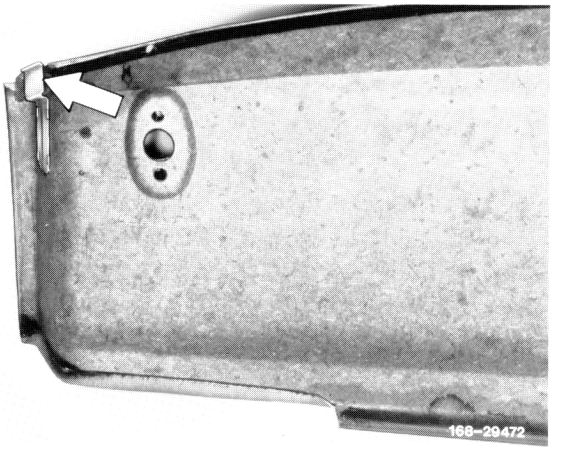

A. Sedan and T-sedan

Removal

1 Pull off chafe strip in range of reveal molding.

2 Position plastic wedge on clips and knock against plastic wedge with ball of thumb.

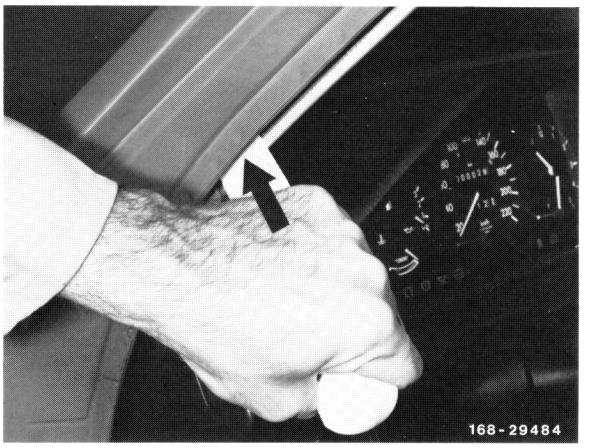

3 Slip reveal molding out of roof frame trim and remove.

Installation

4 Align clips on reveal molding.

5 For further installation proceed vice versa.

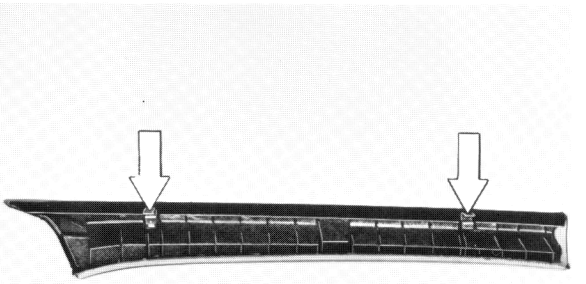

168-29483

B. Convertible

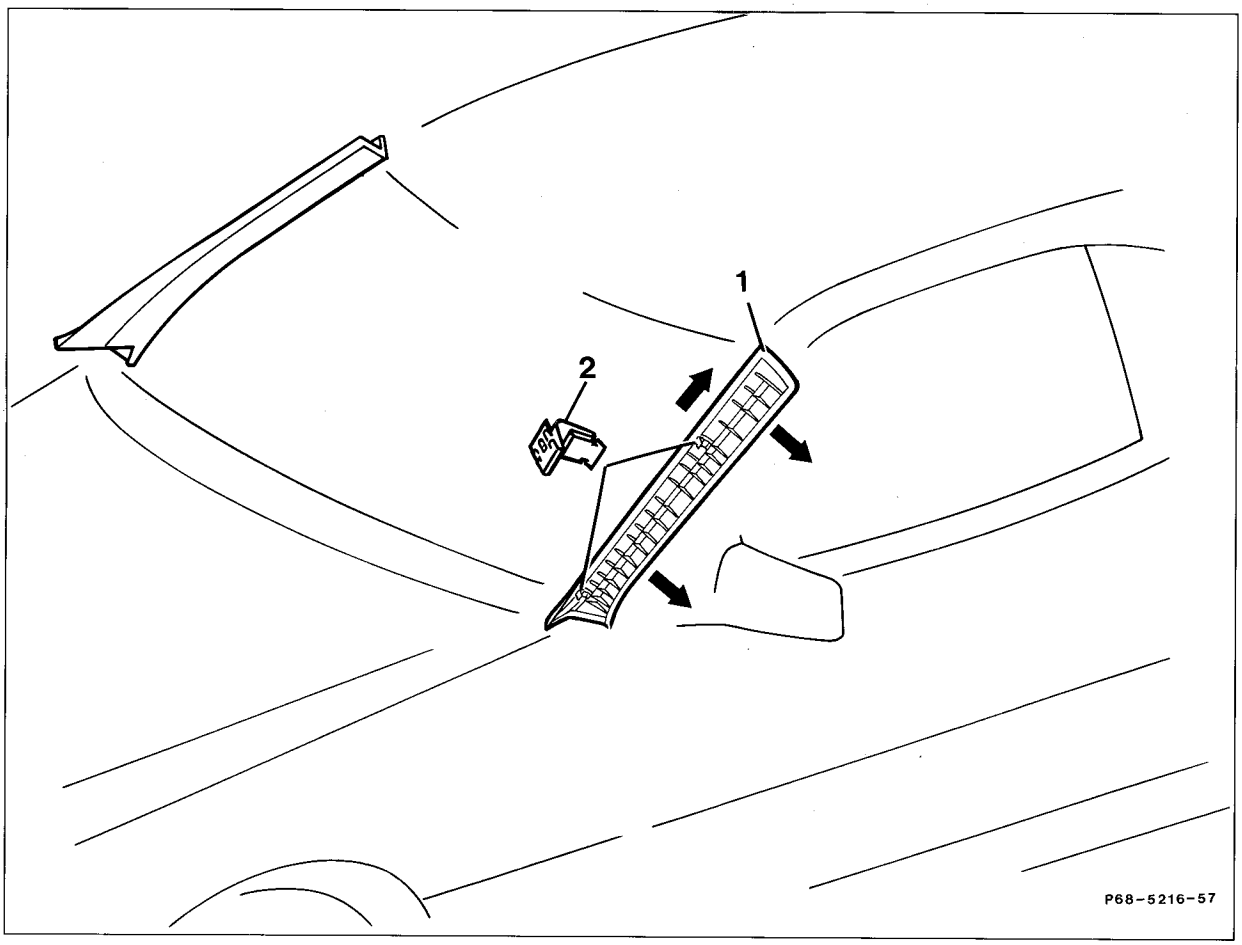

Chafe strip	remove, install.
Panel (1)	push upward (arrow).
Panel (1)	push off at clips (2) with screwdriver in direction of arrows, press on.

Installation note

Before installing press clip (2) into panel (1).

Preliminary work:
Removal and installation of lever for lock actuation
Removal and installation of sun visor and mounts
Removal and installation of recess handle on lock actuation
Removal and installation of roof control unit (plug connection not disconnected)

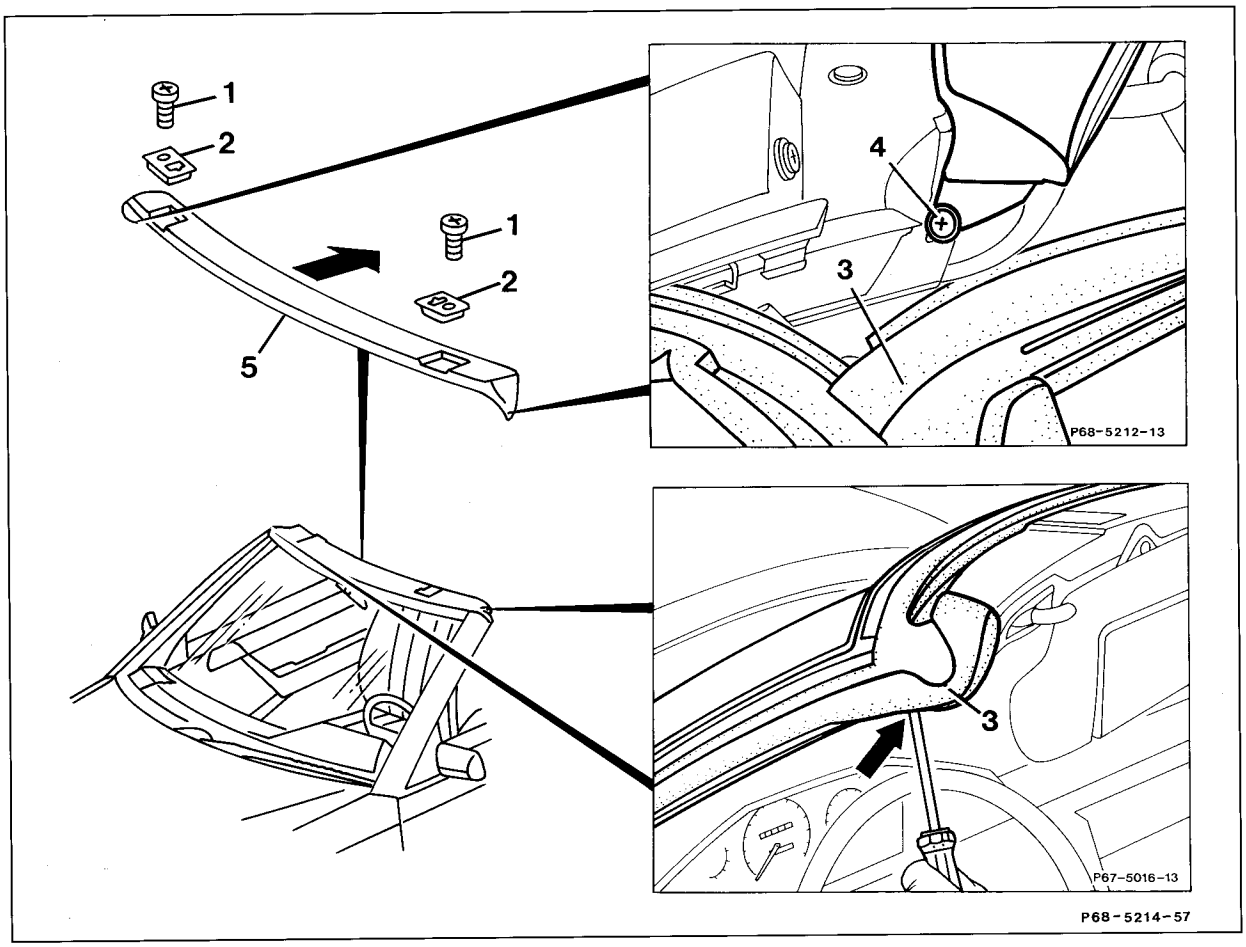

Screw (1)	screw out, screw in.
Cover (2)	remove, install.
Screw (arrow) for fastening cover (3) to A-pillar	screw out, screw in.
Screw (4) on panel (5)	screw out, screw in.
Reveal molding on left and right	press downward slightly and remove panel (5) in direction of arrow, install.

Note

Attach clip (6) before installing panel (5).

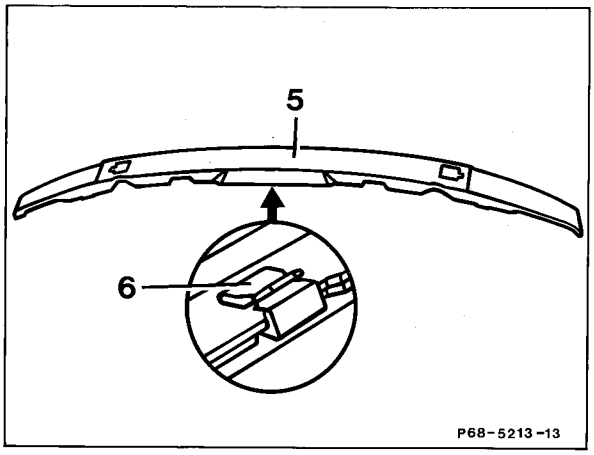

68–425 Removal and installation of reveal molding at top of windshield (convertible)

Preliminary work:
Removal and installation of lever for lock actuation
Removal and installation of sun visor and mounts
Removal and installation of recess handle on lock actuation
Removal and installation of roof control unit (plug connection not disconnected)

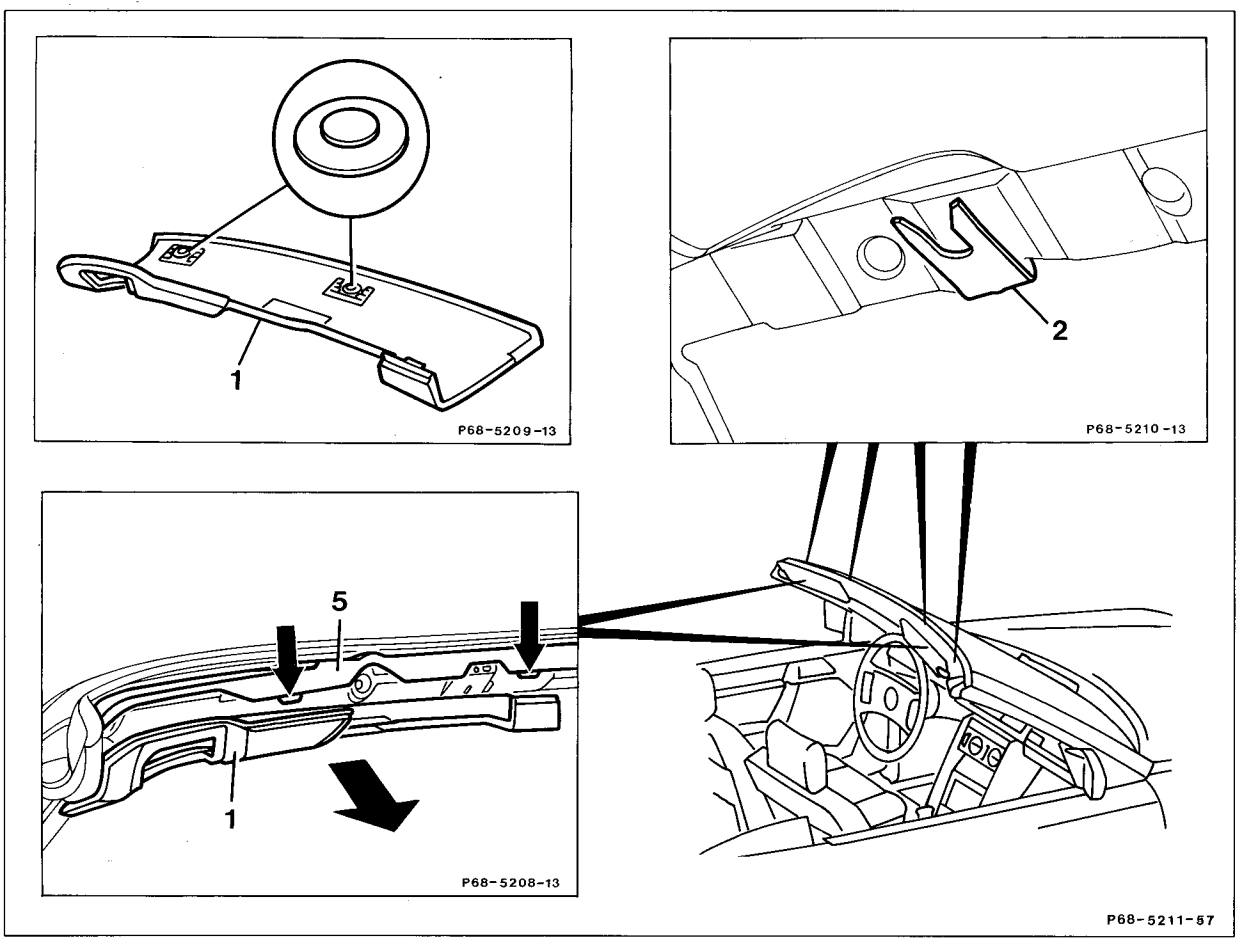

Panel (1) . . . . . remove in direction of arrow, install.

Note
To install hook the panel (1) into the clip (2) on the roof frame and slide between the tabs (arrows) for the panel (5).

A. Sedan, coupe (stretch lining)

Note

Coupe models without sliding-lifting roof are provided with a prefab lining. Removal and installation is described under section B.

Removal

1 Remove trim on roof frame, front (68–400).

2 Remove trim on center pillar left and right (68–470).

3 Remove trim on rear pillar left and right (68–449).

4 Pull off chafing strip in range of headlining.

5 Unscrew hand grips and force out fastening clips at front and rear.

6 Open sun roof, unscrew slide rails and remove.

7 Remove sun roof headlining (77–050).

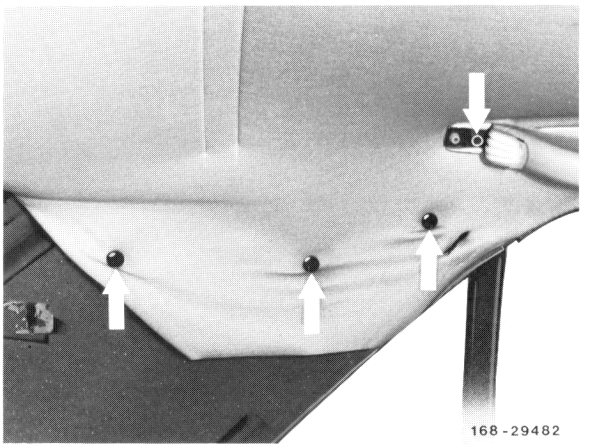

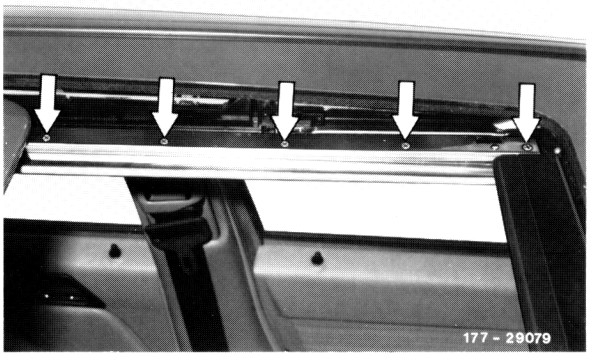

8 Remove chrome-plated covering strips on sun roof cutout left and right.

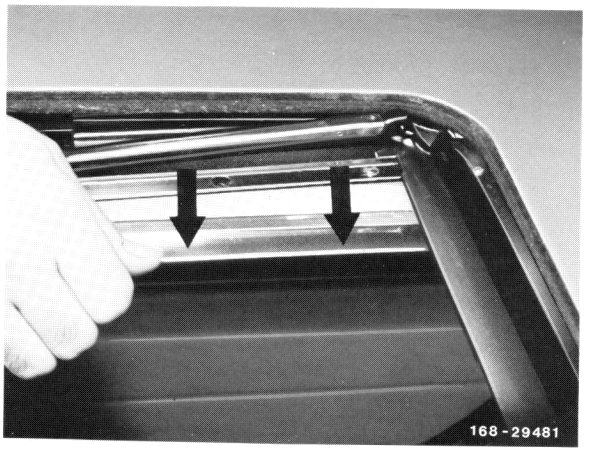

9 Disengage headlining on door cutout.

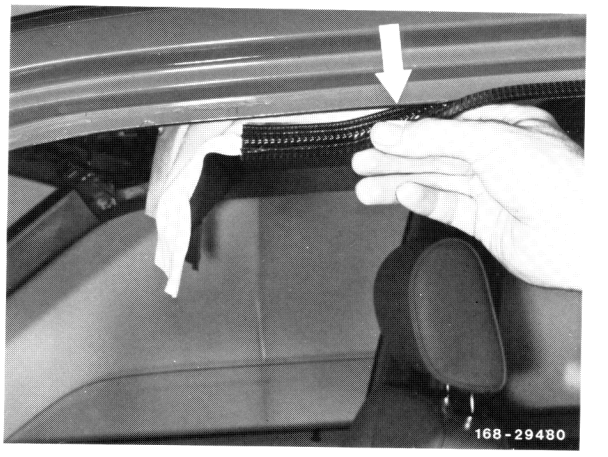

10 Disengage lateral bows on roof frame.

11 Force out rear lamp unit and pull off electrical connection.

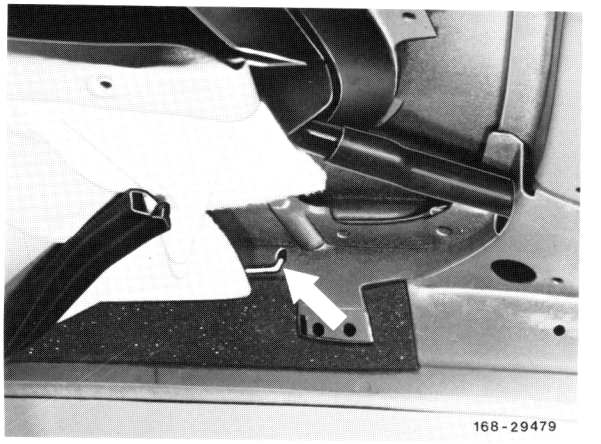

12 Disengage headlining from holding strip on back window, top.

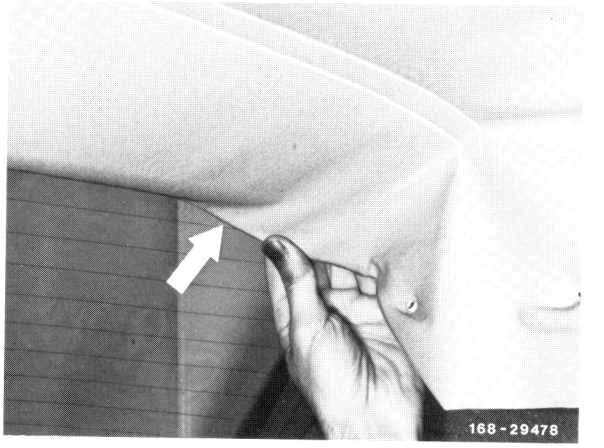

13 Force out holding clips on rear bow and disengage bow laterally.

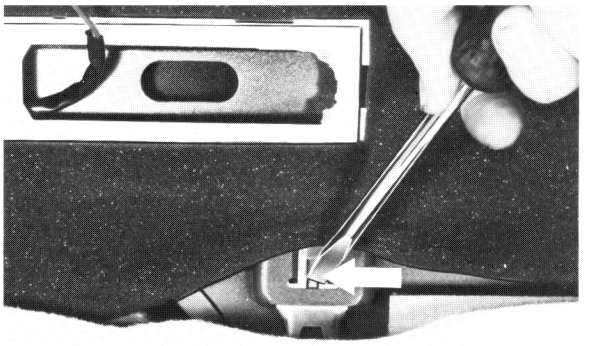

168 - 29477

14 Disengage headlining on sun roof cutout laterally and at the rear and remove.

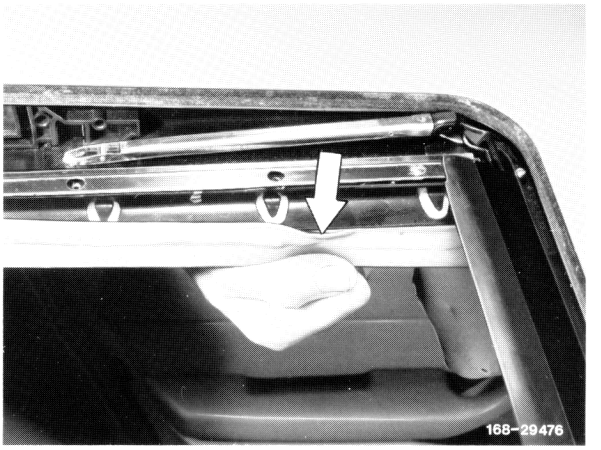

Installation

15 Hook headliner into rear of sliding roof cut-out (on vehicles without sliding roof hook headliner into retaining lugs at front of roof frame).

16 Reinstall in opposite order.

Note

Remove glue residues on headliner carefully with naphtha (with high flash point) with doors opened in well-ventilated room; do not use MB spot remover, nitro-cellulose solvent, etc.

⚠

Observe applicable safety regulations when working with naphtha.

Dirty headliners can be cleaned with MB plastic cleaner, neutral dry foam cleaner, solution of soap and water, etc.

B. Coupe (prefabricated headliner)

Preliminary work:
Trim on roof frame, front, removed (68–400).
Trim on rear pillar left and right removed (68–449).

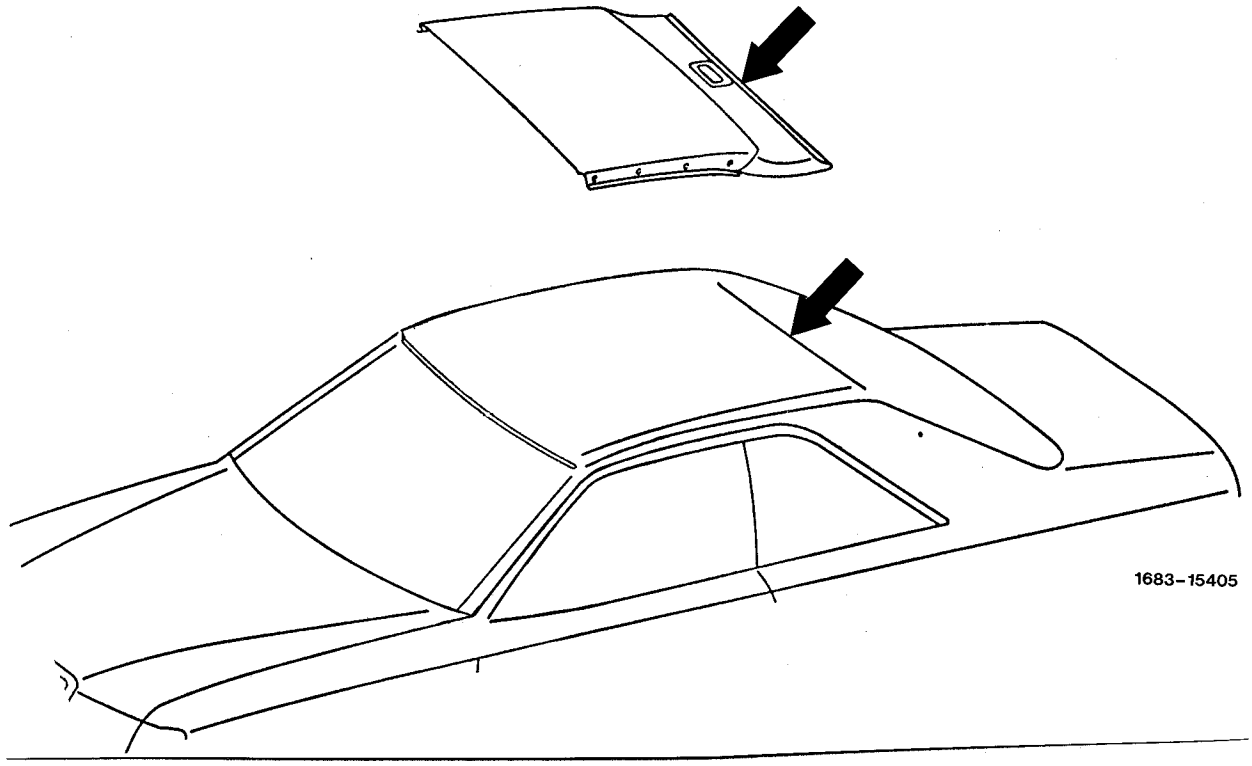

Chafing strip in range of prefab headlining	pull off
Interior lighting in rear compartment	remove
Hand grips	remove
Prefab headlining on back window top toward the rear	disengage (arrows)
Prefab headlining	remove

C. Sedan (prefabricated headliner)

Note

As of vehicle ident. end no. B 171734 (January 1990) a prefabricated headliner was installed instead of the stretch headliner. On vehicles with sliding roof the prefabricated headliner was installed as of vehicle ident. end no. B 437327 (January 1993). The prefabricated headliner is available in three colors and can be removed and installed through the passenger door.

1 Remove door edge protector at front and rear.

2 Remove window moulding at side of windshield (68–405).

3 Remove trim at front of roof frame (68–400). Remove trim toward front.

4 Remove trim on center pillar on left and right (68–470).

5 Remove trim on rear pillar left and right (68–449).

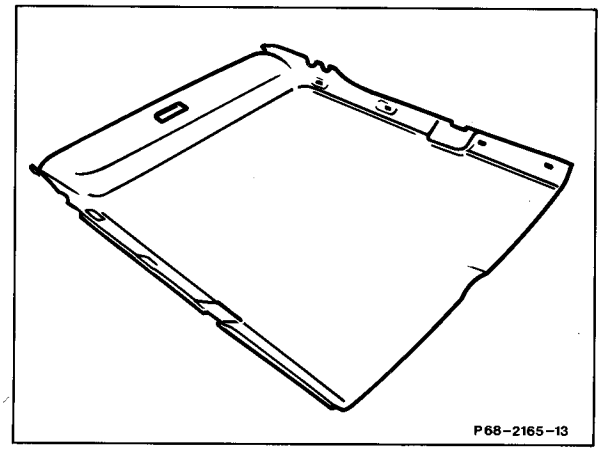

6 Screw off grab handles on inside and remove rear illumination.

7 Move front seats all the way back and put backrests on driver's seat down against stop. Move gearshift lever or selector lever to front position.

8 Unhook prefabricated headliner at rear of roof frame by pulling prefabricated headliner toward rear (two retaining lugs).

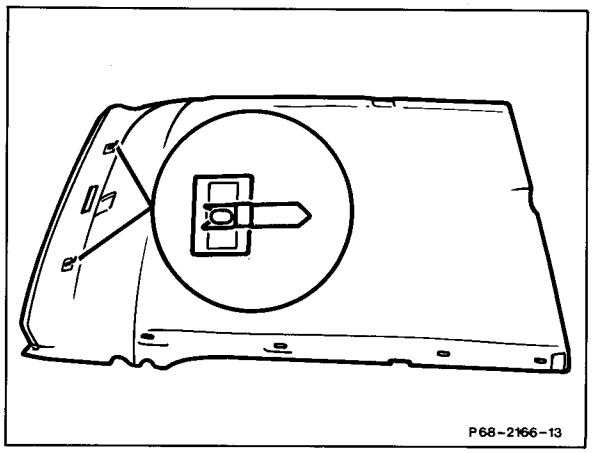

9 Remove prefabricated headliner through passenger door opening.

10 Reinstall in opposite order.

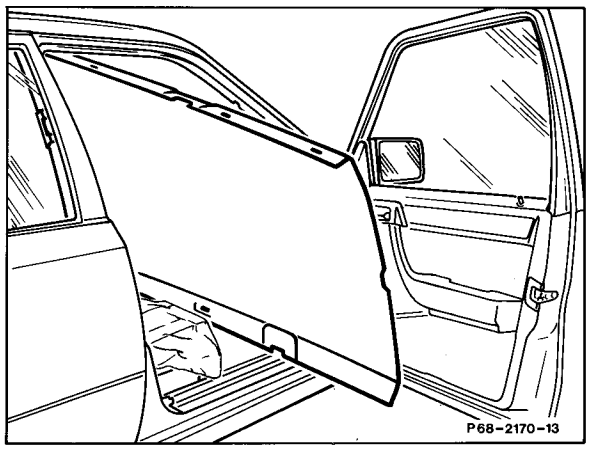

Trim on rear pillar left and right removed (68–449)

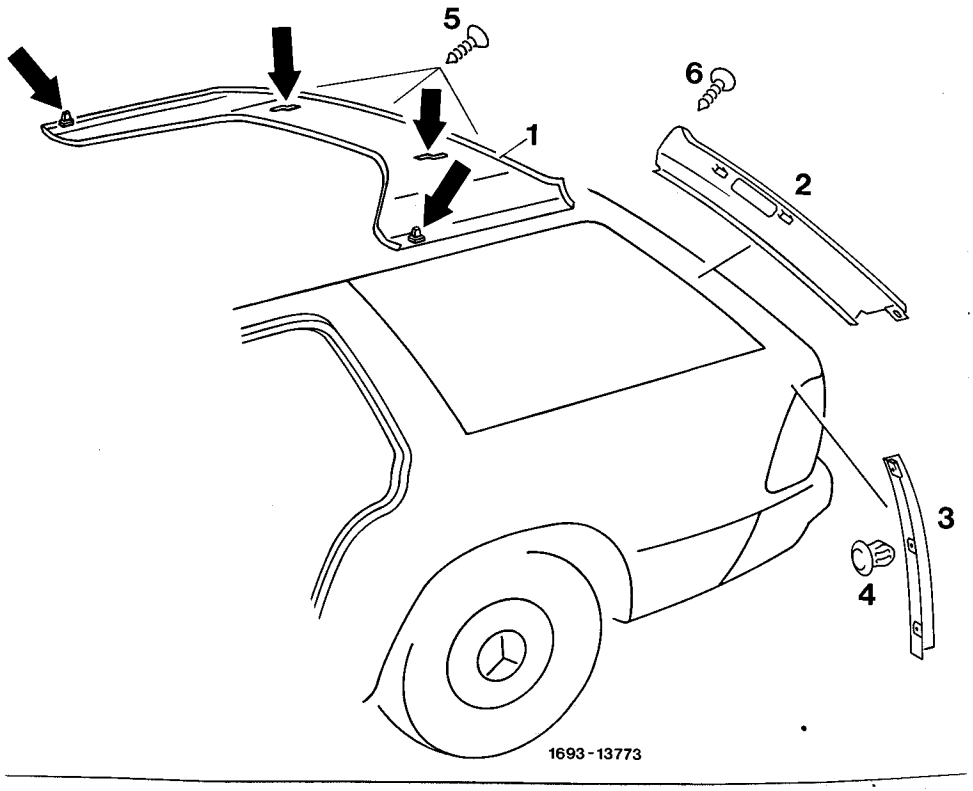

Screws (5)	screw 5 each out – in
Trim (1)	clip out – in at front left and right (front arrows)
Trim (1)	pull out of mount in roof frame toward the rear (rear arrows)

Installation note

Plug trim following installation under rubber lip of sealing frame by means of a plastic wedge.

168 - 32474

68–449 Removal and installation of trim on rear pillar

Removal

1 Pull chafing strip in range of trim from rear pillar.

2 Disconnect the 3 front fastening hooks on trim in direction of vehicle center.

3 Pull trim forward and remove.

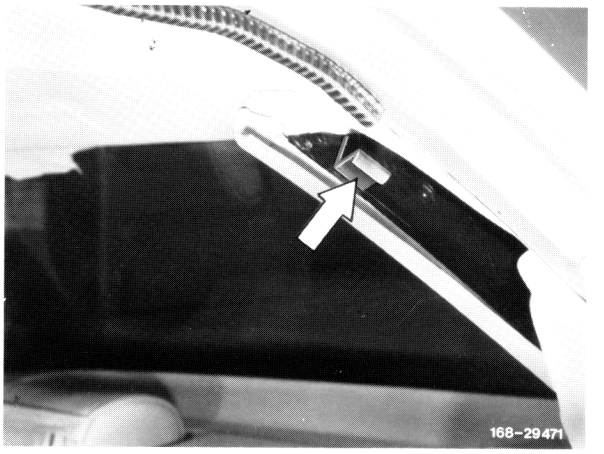

4 Unscrew belt end fitting on vehicle floor, removing rear seat cushion for this purpose.

5 Guide belt end fitting through opening in trim and remove trim.

Installation

6 Align holding clip on trim.

7 Guide belt end fitting through opening in trim and screw to vehicle floor.

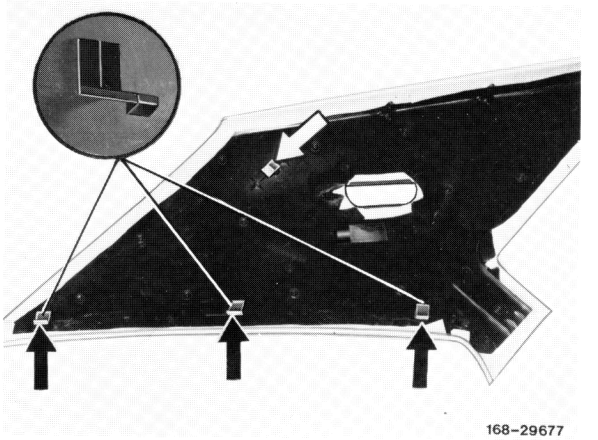

44911

8 Insert trim from the front with holding clamp into recess on rear pillar and clip on by means of the 3 front fastening hooks.

9 For further installation proceed vice versa.

B. T-sedan

Remove and install

1 Remove loading space trim at the left or open at the right.

2 Remove spare wheel.

3 Remove loading space lamp.

4 Remove trim below.

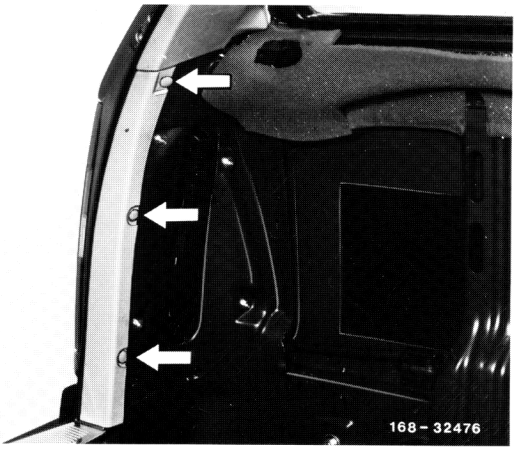

5 Unscrew screw at the top, pull trim in downward direction and remove.

168 - 32477/1

6 Introduce trim with hook (arrows) into recess on rear pillar from below and fasten with screw at the top.

7 Connect loading space lamp and fasten with clips.

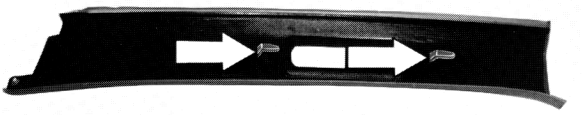

168 - 32475

8 Lift rubber lip from frame of side window pane above trim.

168 - 32474

9 Fasten trim below above sheet metal fold and insert plastic clips (3 each).

10 For further installation proceed vice versa.

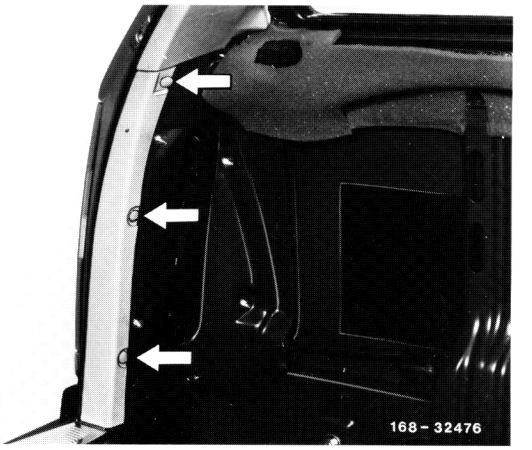

168 - 32476

Removal, installation

1 Remove rear cushion and rear seat backrest (91–170).

2 Remove trim on rear pillar left and right, do not unscrew belt guide fitting for this purpose (68–449).

3 Push out covers on headrest brackets.

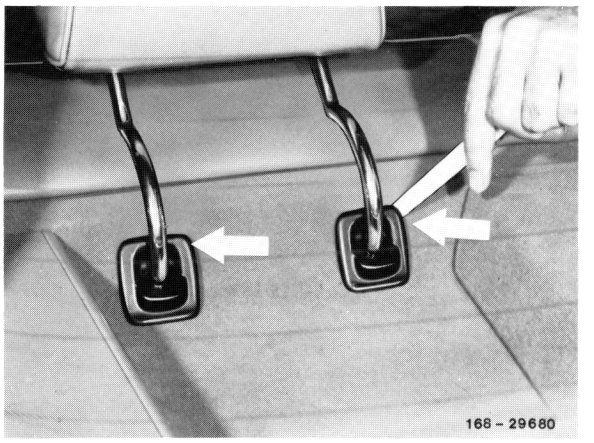

4 Push locking lever of lefthand headrest bracket bearing forward by means of a screwdriver, while simultaneously disengaging the headrest bracket by means of light blows with ball of thumb toward the rear.

5 Push locking lever on righthand bearing forward and disengage similar to headrest bracket described above.

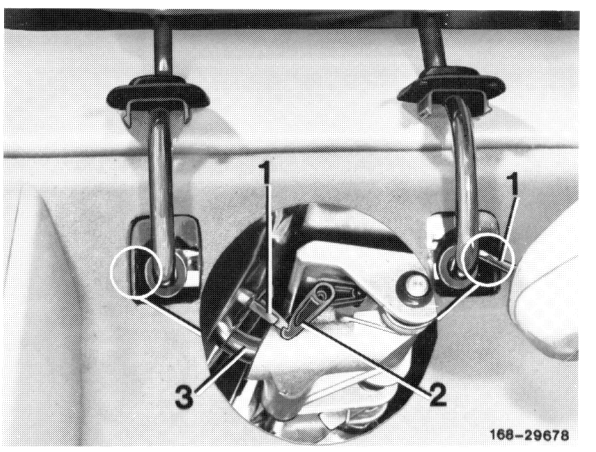

1 Screwdriver
2 Locking lever
3 Headrest bracket

4581

6 Knock out headrest uniformly toward the rear out of bearings, by means of light blows with ball of thumb and remove.

7 Remove first aid kit, disengage rubber bands and unscrew both holders.

8 Lift hat rack above holding link for rear seat backrest and pull out in forward direction.

9 For further installation proceed vice versa.

Note: When installing headrest, slip both headrest brackets uniformly into bearings until lock of headrest bracket engages.

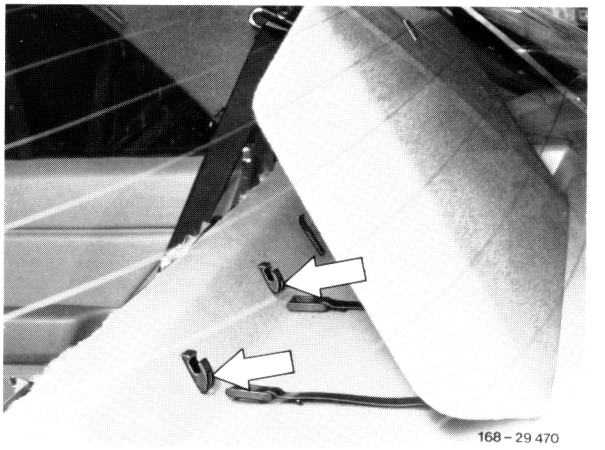

45812

68–460 Removal and installation of electrical roller blind for rear window

Preliminary work:
Ground lead on battery disconnected

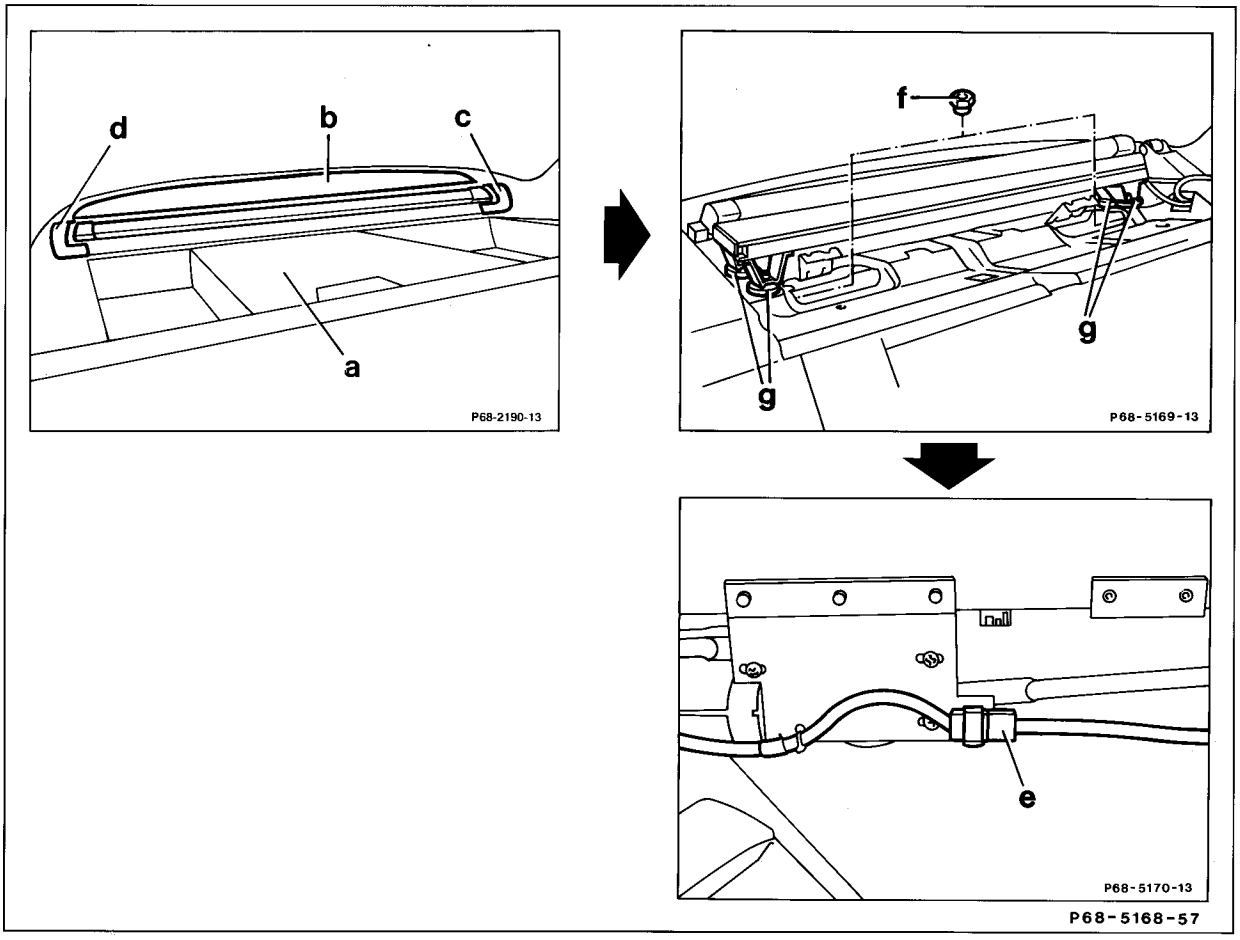

Covers (b, c, d)	unclip, clip in.
Rear shelf (a)	remove, install (68–458).
Mounting nuts (f)	screw off, screw on (6.5–7 Nm).
Plug connector on motor (e)	disconnect, connect.
Blind	remove, install.

Note

During assembly check the installation position of the blind and correct with spacers (g), if required.

Special tool

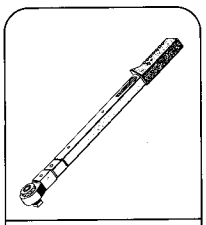

001 589 72 21 00
00

Removal

1 Turn out screws and unscrew belt end fitting.

2 Pull off chafing strip in range of center pillar trim.

3 Pull of trim from center pillar to vehicle center.

168–29469

Installation

4 Align upper fastening clamp.

5 For further installation proceed vice versa.

Attention!
To prevent damage to safety belt, be absolutely sure that, upon installation of trim, the upper belt guide fitting is always freely movable. If required, correct covers or trim which are interfering with installation position.

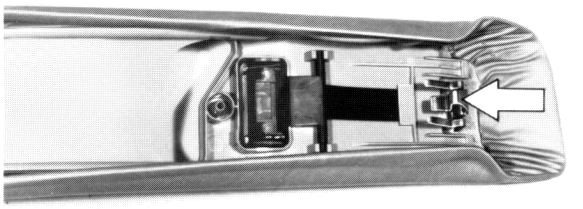
168–29468

Repairing broken clip mounts

It is possible to repair broken webs for the mounting clips (arrow).

1 Carefully remove MB Tex foil (1) in upper area of trim (2) and remove all web material (arrow).

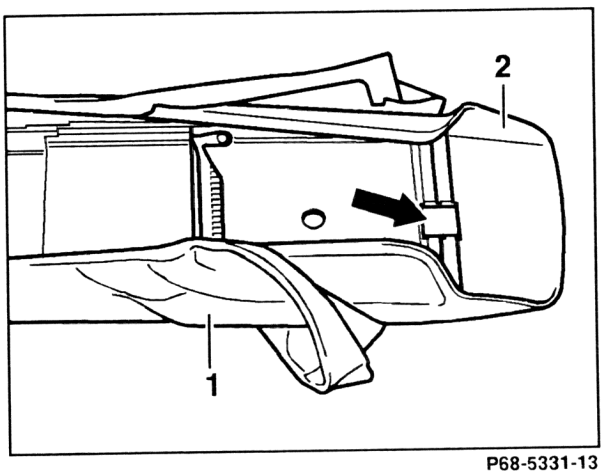

P68-5331-13

4791

2 Fabricate sheet metal strip (60x20x1) and drill two 4.2 mm dia. holes.

3 Position sheet metal strip (3) on inside of trim (2) and mark holes on trim.

4 Drill holes in trim (4.2 mm dia.).

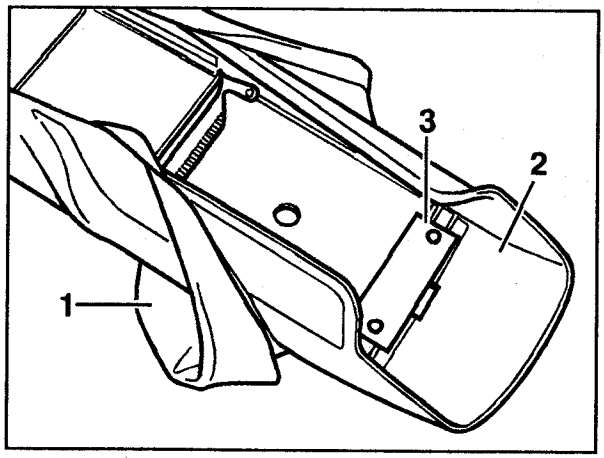

P68-5332-13

5 Rivet sheet metal strip (3) onto trim (2) with blind rivets (4.4 mm dia.).

6 Glue MB Tex foil (1) onto trim (2) with universal glue, part no. 000 989 82 71, and align.

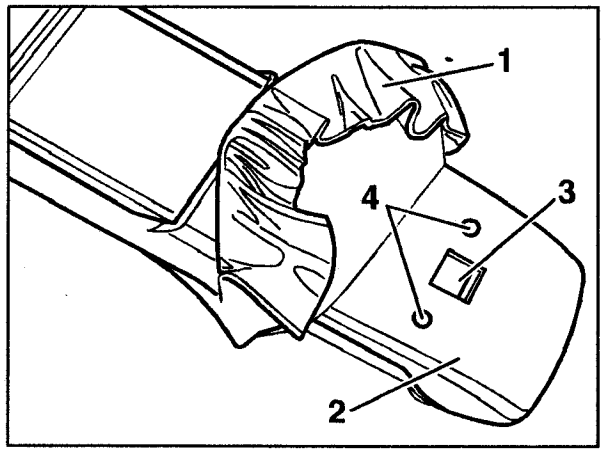

P68-5333-13

7 Attach mounting clip (5) to sheet metal strip (3).

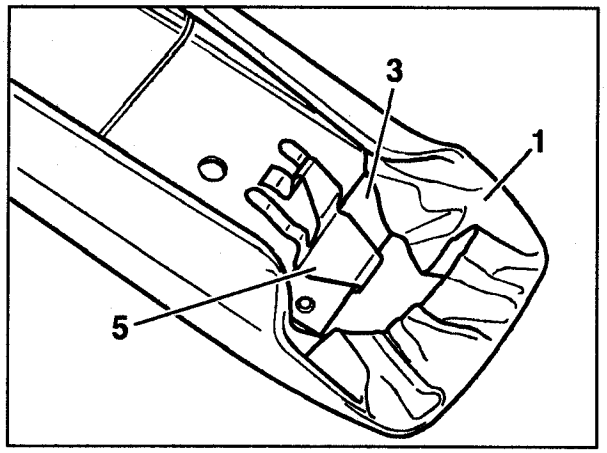

P68-5334-13

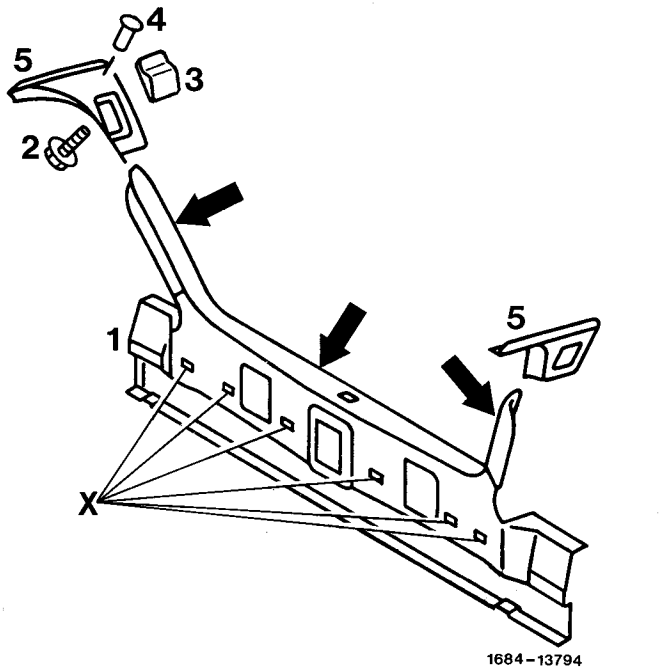

Trim (1)	clip out – in with plastic wedge (arrow) and screwdriver (x)
Trim (1) in forward direction	remove and install
Screw (2)	screw 2 each out – in
Stop (3)	remove and mount
Plastic rivet (4)	remove and install 2 each
Trim (5)	remove and mount

Note: Broken off plastic hooks (x) can be replaced with plastic dowels, part no. 001 997 39 86.

Survey of items

No.	Item	Coordinates
68-87021	Lining in cargo space, left, closes poorly, hooks for hanging up break	B 14
68-88021	Noises in belt height adjustment	C 14
68-88051	Spare wheel lining (modified version) cannot be locked on vehicles manufactured prior to 10/86	D 14
68-89121	Noises in belt height adjustment	E 14
68-90071	Scissors-type roller blind does temporarily not attain the fully retracted position	E 14

68 Lining

68-87021	Lining in cargo space, left, closes poorly, hooks for hanging up break.	Model 124 T-sedan	–

Cause
Lining not stiff enough.

Remedy
Install modified lining, part no. 124 690 78 25 (standard), part no. 124 690 79 25 (with load anchoring system). For this purpose, remove lug at top of lining. The lug is in the area of front locks.

Note
Vehicles as of production date 26.11.86 and vehicle ident end no. 1F 027 289 are in order.

68 Lining

68-88021	Noises in belt height adjustment.	Model 124 sedan	–

Cause
Too much clearance of slide in center pillar lining.

Remedy
Glue felt to link of slide.

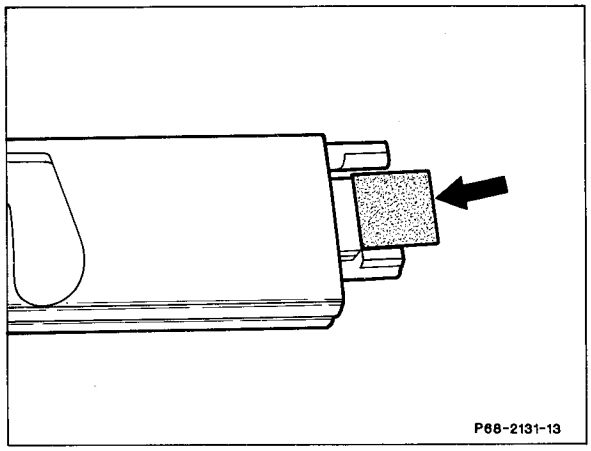

68 Lining

68-88051	Spare wheel lining (modified version) cannot be locked on vehicles manufactured prior to 10/86.	Model 124 T-sedan	–

Cause

Oval opening in side wall for plastic bolt on lining missing (Fig.).

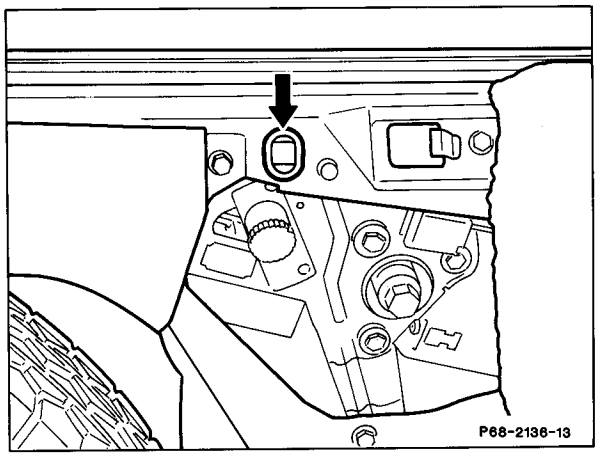

Remedy

Cut off plastic bolt on lining (Fig.).

Production breakpoint of oval opening in side wall: 10/86 or vehicle ident end no. F 023 266.

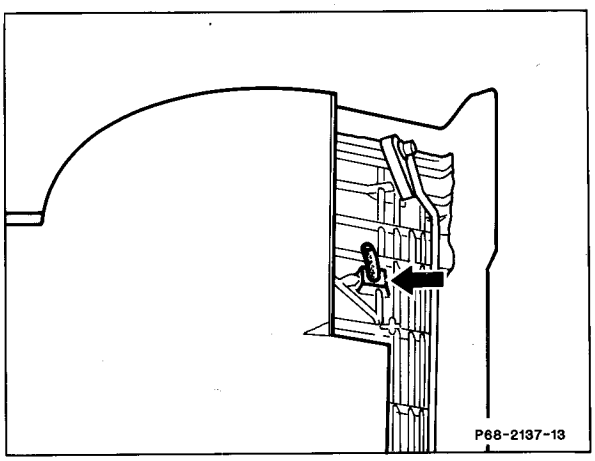

68 Lining

68-89121	Noises in belt height adjustment.	Model 124 as of approx. 05/89	–

Cause

Too much play of slide in center pillar lining.

Remedy

Install holding clamps (2 each), part no. 124 988 93 78, in center of slide guide.

Production breakpoint: 10/89

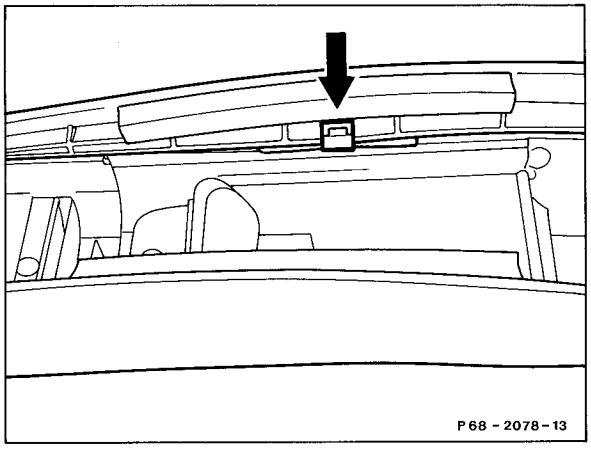

68 Scissors-type roller blind for rear window

68-90071	Scissors-type roller blind does temporarily not attain the fully retracted position.	Model 124 sedan as of approx. 01/90

Cause

1. Upper cover above roller blind blocks roller blind during retraction.

2. The sliding rollers on upper roller blind cross bar for support in the upper range are not continuously running along rear window, so that the scissors will press against the roller blind lining during retraction.

Damage code for warranty/goodwill claim: 81 046 16

Remedy

1. Press down upper cover above roller blind in correct position.
2. Remove roller blind, then connect roller blind and extend. Bend both scissors slightly toward the rear, reinstall roller blind. If remedial measures prove to be ineffective, inquire further measures from KD-50 telephone 07031/90-5514 or 2343.

Note

If on vehicles with head restraints the roller blind is not completely attaining the retracted position, the head restraints cannot be lowered, since the head restraints lowering device is connected to the roller blind by means of a microswitch.

Wiring diagram electric scissors-type roller blind for rear window (without head restraints, as of approx. 01/90)

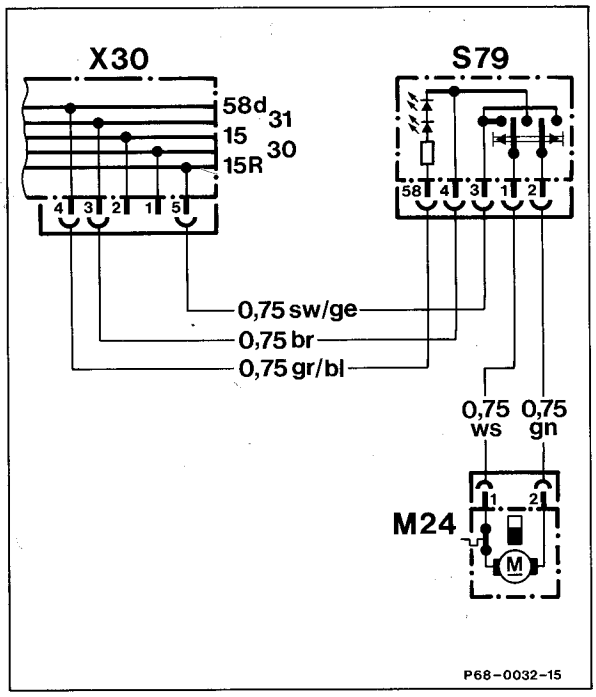

M24 Rear window roller blind motor
S79 Rear window roller blind switch
X30 Plug connection block for optional equipment

Wiring diagram head restraints (as of approx. 01/90)

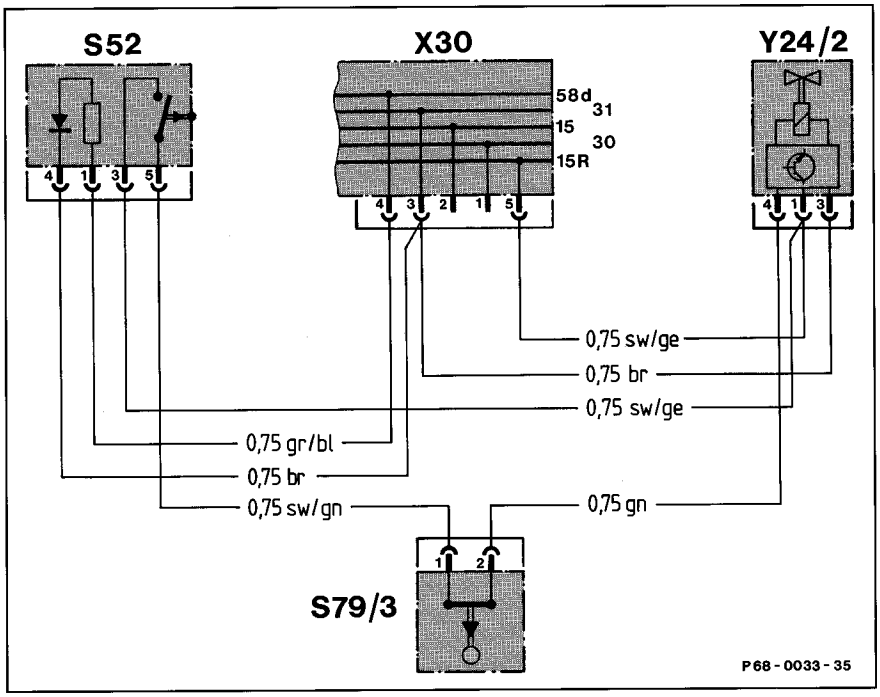

S52 Rear head restraint release switch
S79/3 Rear window electric roller blind microswitch
X30 Plug connection block for optional equipment
Y24/2 Head restraint release valve with release delay

Lubricating door hinges

7220

Model 107 123 126

Grease type	
Lubricating grease	Multipurpose grease

Commercial tools	
Grease gun with pointed tip	obtain locally

Door hinges (arrows).

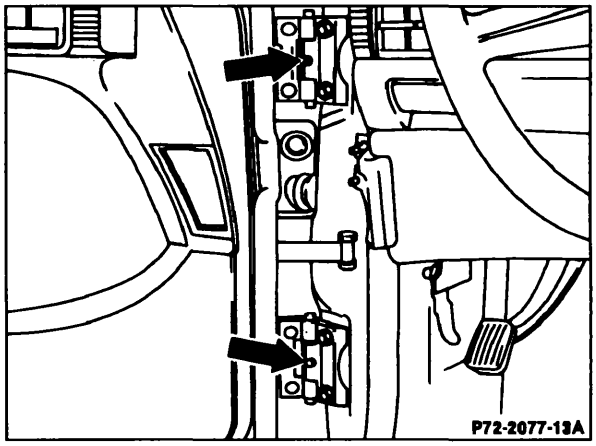

Oil can T-models only

Tailgate hinge

Tailgate gas pressure spring pivo (arrows).

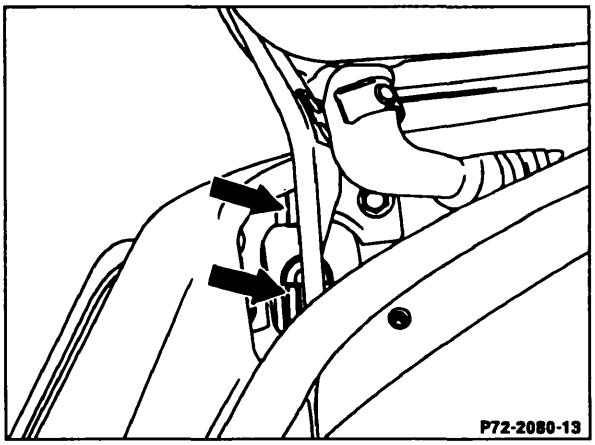

Lubricating door locks

7221

Model 107, 123, 126

Type of lubricant

Fluid grease (NLGI Class 00)	Refer to MBNA Factory Approved Service products list

Door lock: Driver's and rear door.

Striker pin and striker eye

Contact surfaces of latch.

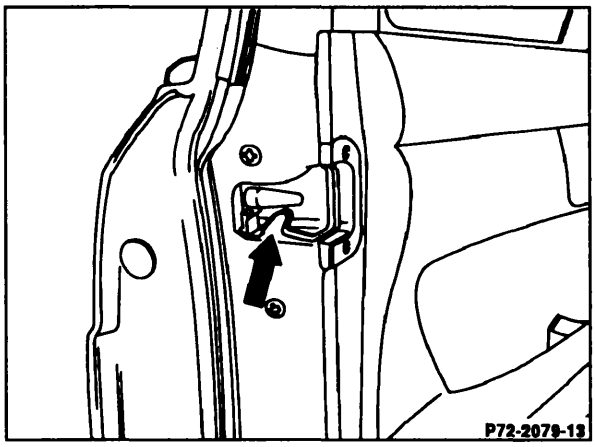

Mercedes-Benz

service information

Date: April 1998

Order No.: S-SI-72/55

Supersedes: S-SI-MBNA-72/14, January 1997

Group: 72

Revision: ***Updated to include model 210***

SUBJECT: MODELS 124, 129, 140, 202 and 210
REPLACEMENT OF DOOR INTERIOR TRIM PANEL COMPONENTS

On the above models, door interior trim panels components, such as arm rests and door pockets (where available as spare parts) can be replaced using the retaining clips listed below, with the exception of model 202 rear doors (see S-SI-MBNA-72/13, May 1995, for model 202 rear door interior panel dissassembly/assembly procedure).

Interior door trim panel component replacement procedure

1. Remove the interior trim panel assembly (See WIS, group 72 for work instructions on removing/installing trim panels).

2. Using cutting pliers or a 5/8 inch chisel and hammer, remove the rounded portion of the plastic mounting studs (back side of trim panel) of the component being replaced.

⚠ **WARNING!**
Always wear eye protection when removing the rounded portion of the plastic mounting studs. Use extra caution so that only the rounded portion is removed and the surrounding area of the door interior trim panel is not damaged.

This bulletin has been created and maintained in accordance with MBNA-SLP 5.1, Document and Data Control, and MBNA-SLP 16.1, Control of Quality Records.

© 1998 Mercedes-Benz of North America, Inc.
Mercedes-Benz Canada, Inc.
Technical Information
www.MBUSA.com

All rights reserved. Reproduction or translation in whole or in part is not permitted without authorization from the publisher. Printed in U.S.A.
1-800-FOR-MERCedes

3. Insert the new component (2,3) into the door interior panel (1). While providing support to the component, use a suitable tool (4) and press the clips (5) onto the studs securely (Figure 1).

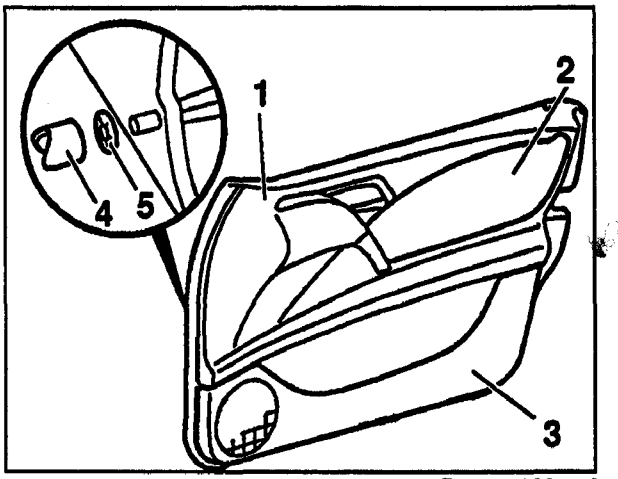

Figure 1 P72.10-0334-13

4. Trim the studs to 1 mm above the clip (Figure 2).

⚠ CAUTION!
Trim studs cleanly, use of excessive force will crush studs.
a = 1mm

5. Reinstall trim panel.

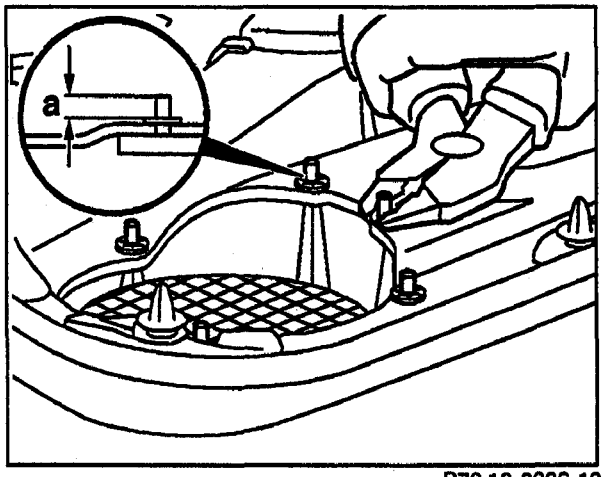

Figure 2 P72.10-0336-13

Parts Information

Qty.	Part Name	Part Number
As needed	Clip	000 994 06 48

Sun roof, clean and grease rails

7730.1

Mechanical sunroof

Type of lubricant

MB slide paste	001 989 14 51

Unlock sunroof and remove locking handle as well as bezel.

Open sunroof 3/4 and unclip roof headlining at front and remove from above.

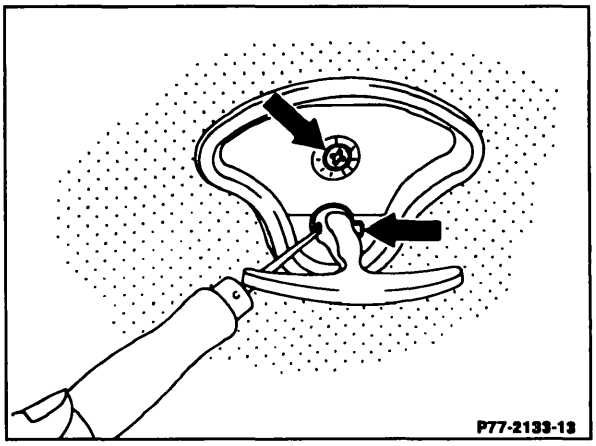

Open sunroof completely and remove sliding rails on left and right side.

Remove sunroof from above.

Clean out water drains at right front and left front from above with compressed air.

Replace damaged sliding jaws.

Clean rubber and plastic sliding jaws and thoroughly grease.

Clean sliding rails and thoroughly grease in area of contact surface.

Install sunroof and adjust.

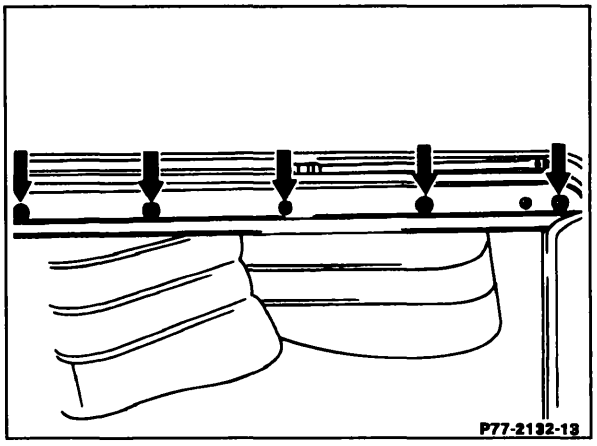

Sun roof, clean and grease rails

7730.2

Electrical sunroof

Type of lubricant

MB slide paste	001 989 14 51

Open sunroof 3/4 and unclip roof headlining at front and remove from above.

Open sunroof completely and remove sliding rails on left and right side.

Clean out water drains at right front and left front from above with compressed air.

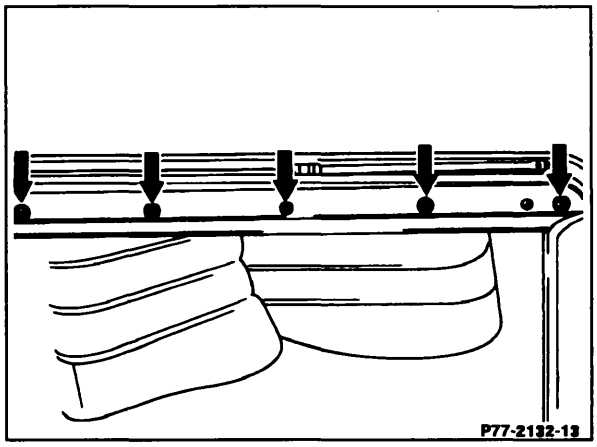

Close sunroof and unscrew locking bolt on left and right side.

Unscrew guide plate on roof frame at front and press out connecting clamp at cable (arrows).

Run control cable back.

Remove sunroof cover from above.

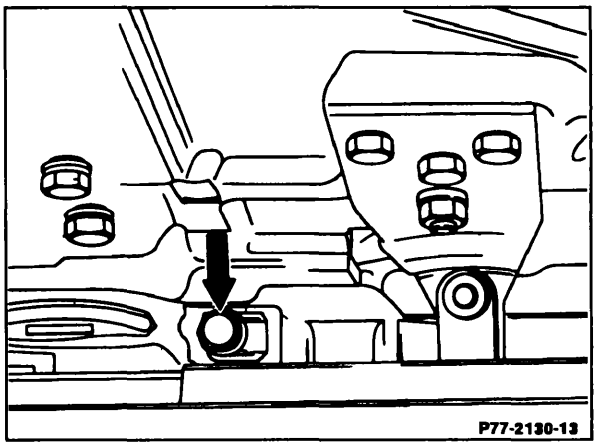

Replace damaged sliding jaws.

Clean and thoroughly grease rubber and plastic sliding jaws.

Clean sliding rails and thoroughly grease in area of contact surface.

Install sunroof and adjust.

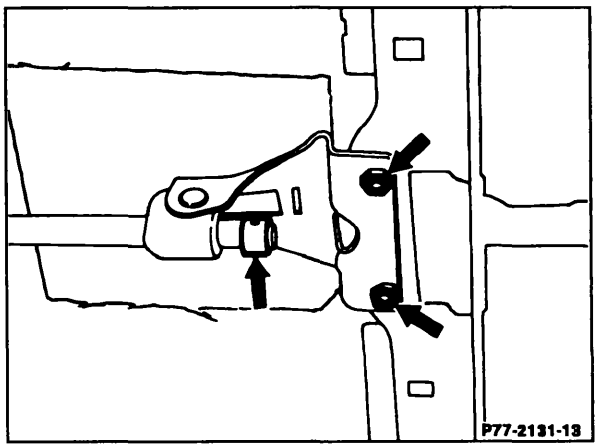

Sun roof, clean and grease rails

7730.3

Sliding lifting sunroof

Special tools

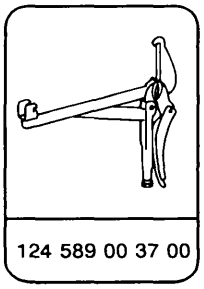

Type of lubricant

MB slide paste	001 989 14 51

Open sunroof 3/4 and unclip roof headlining at front, fully open sunroof and remove headlining from above.

Remove sliding rails on left and right side.

Close sunroof.

Unscrew nuts on right and left.

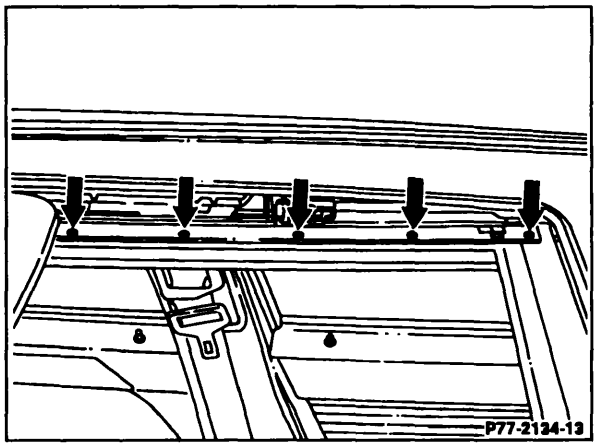

Unscrew nuts on right and left.

Remove sunroof panel from above.

Clean out water drains at right front and left front from above with compressed air.

Replace damaged sliding jaws.

Clean and thoroughly grease rubber and plastic sliding jaws.

Clean sliding rails and thoroughly grease in area of contact surface.

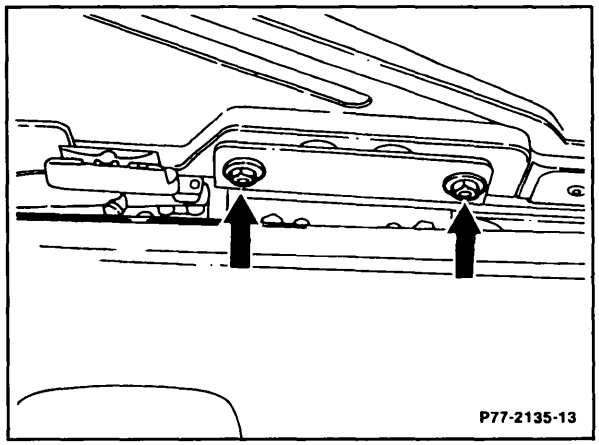

Make 2 centering pins (if not already available).

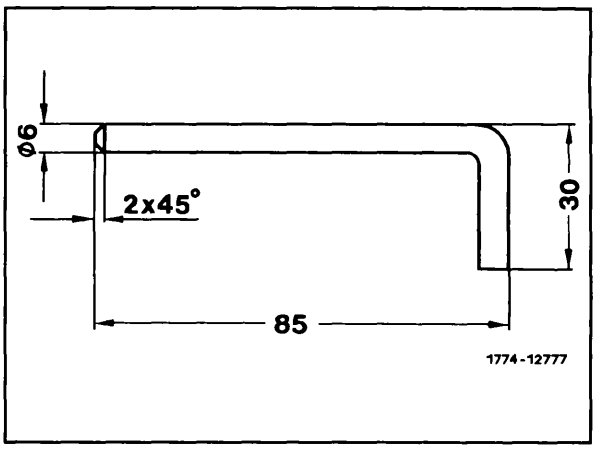

Insert centering pins in centering bores on left and right side.

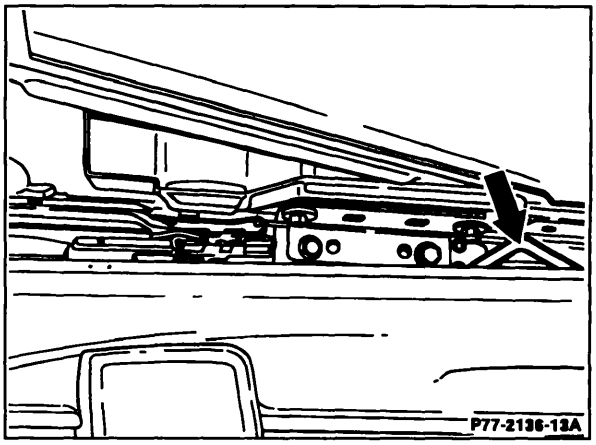

Insert sunroof panel from above, start nuts, preload sunroof panel using tool 124 589 00 37 00 and tighten nuts.

Complete assembly in reverse order of disassembly.

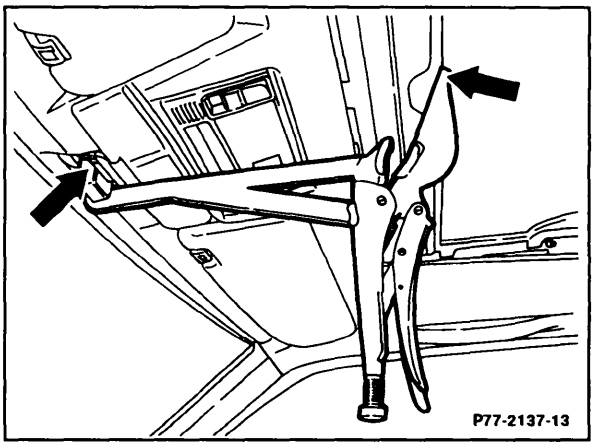

77–050 Removal and installation of headlining on sun roof

Removal

1 Unclip sun roof headling at fron with sun roof 3/4 open (4 clips).

2 Completely open sun roof.

3 Pull out sun roof headling in forwad, upward direction.

4 Check upper halves of clips on sun roof headlining.

5 Check lower halves of clips on sun roof.

Installation

6 Close sun roof and set both sliding parts horizontally.

7 Completely open sun roof.

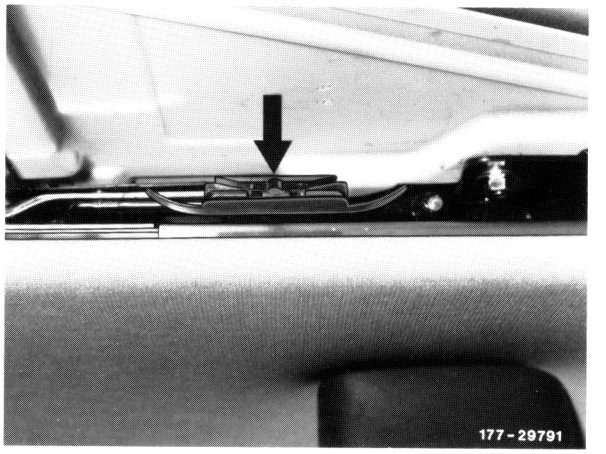

8 Slip in sun roof headlining from front top until clips are abutting against sun roof, at the same time introducing tube into protective tube on sun roof headlining.

9 Close sun roof by half and fasten sun roof headlining at front audibly with clips (4 clips).

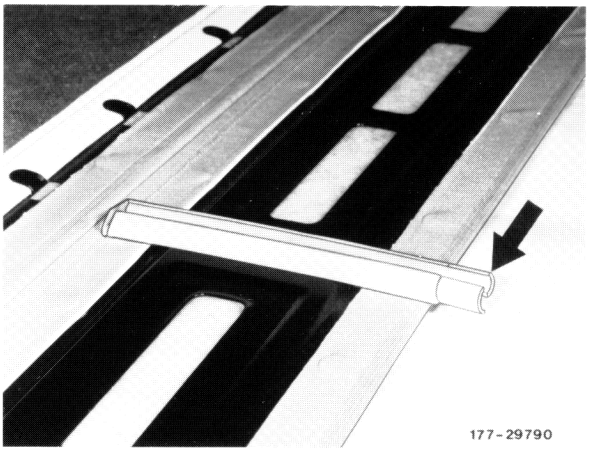

0501A

77-055 Removal and installation of headlining on cabriolet

Operation no. of operation texts and work units or standard texts and flat rates:

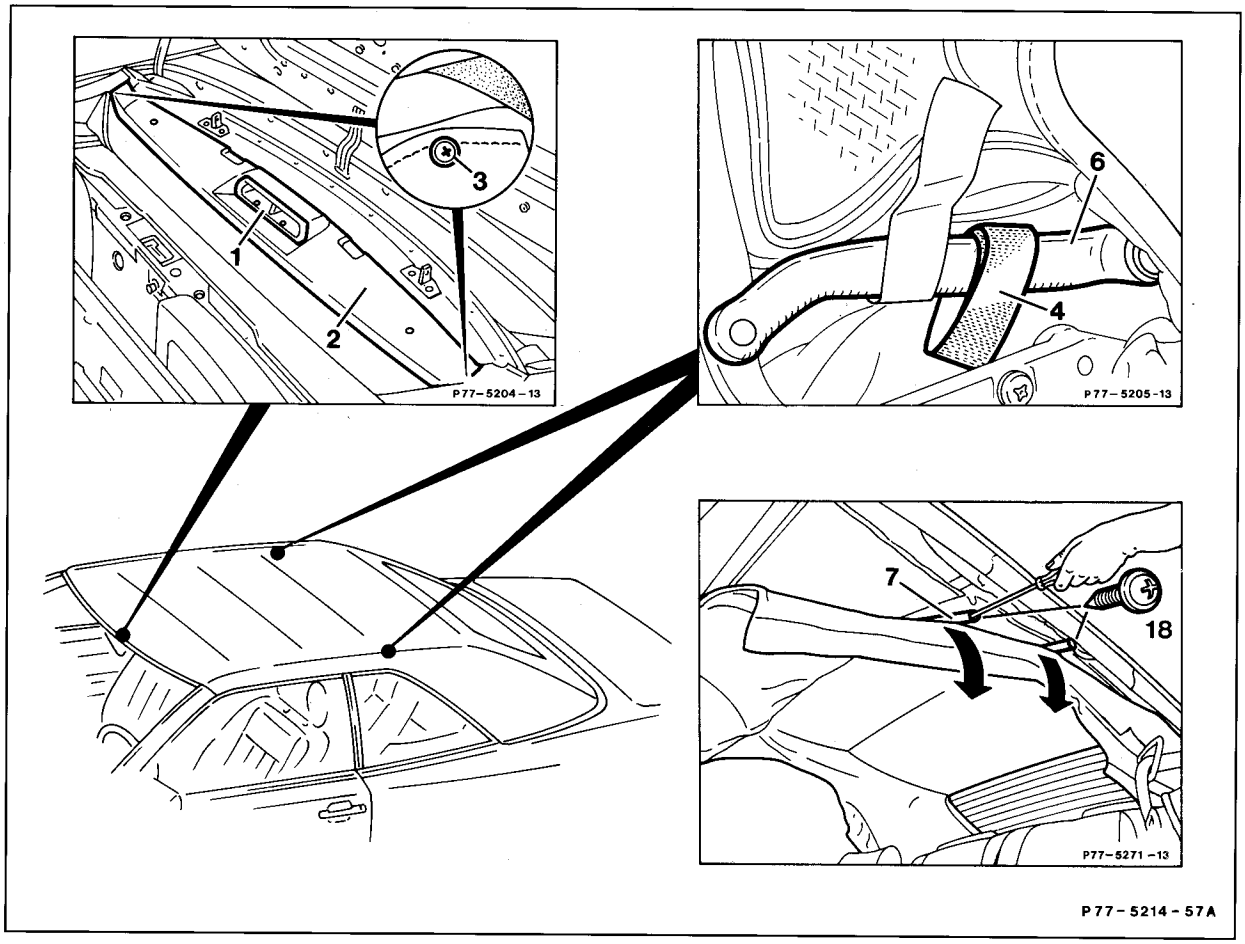

Soft top	fold down into soft top compartment.
Recessed handle (1), cover (2)	remove, install.
Screw (3)	unscrew, screw in.
Glued joint on side	detach, glue on (item 18).
Headlining	detach from soft top frame, attach.
Soft top	close, push up soft top frame at front, raise soft top bow.
Velcro strip (4) on guide arm (6)	open, close (item 11).
Screw (18) on retaining bar (7)	unscrew, screw in and press retaining bar off with screwdriver (item 7).

4 Unscrew nuts left and right.

5 Remove tilting/sliding sun roof top panel in upward direction.

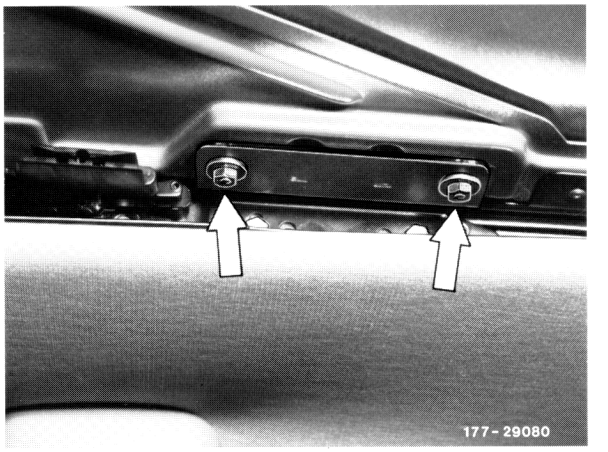

6 Make two centering pins (unless already provided).

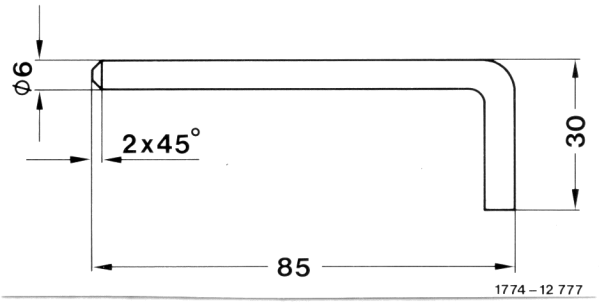

7 Plug centering pin into centering bore at left and right.

8 Remove interior rear view mirror.

Installation

9 Insert tilting/sliding sun roof top panel from above, position nuts, tension tilting/sliding sun roof top panel with special tool, part no. 124 589 00 37 00 and tighten nuts.

10 For further installation proceed in reverse order.

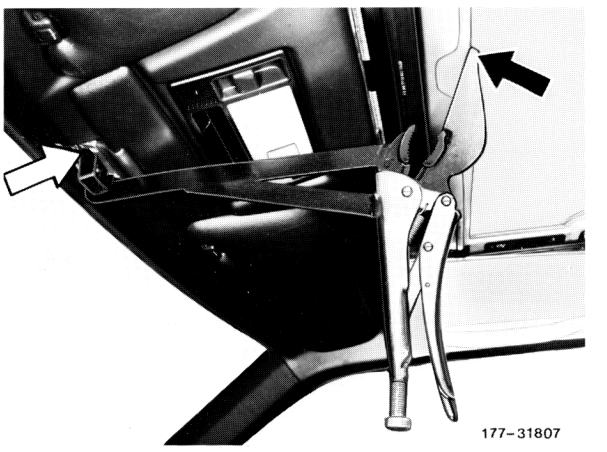

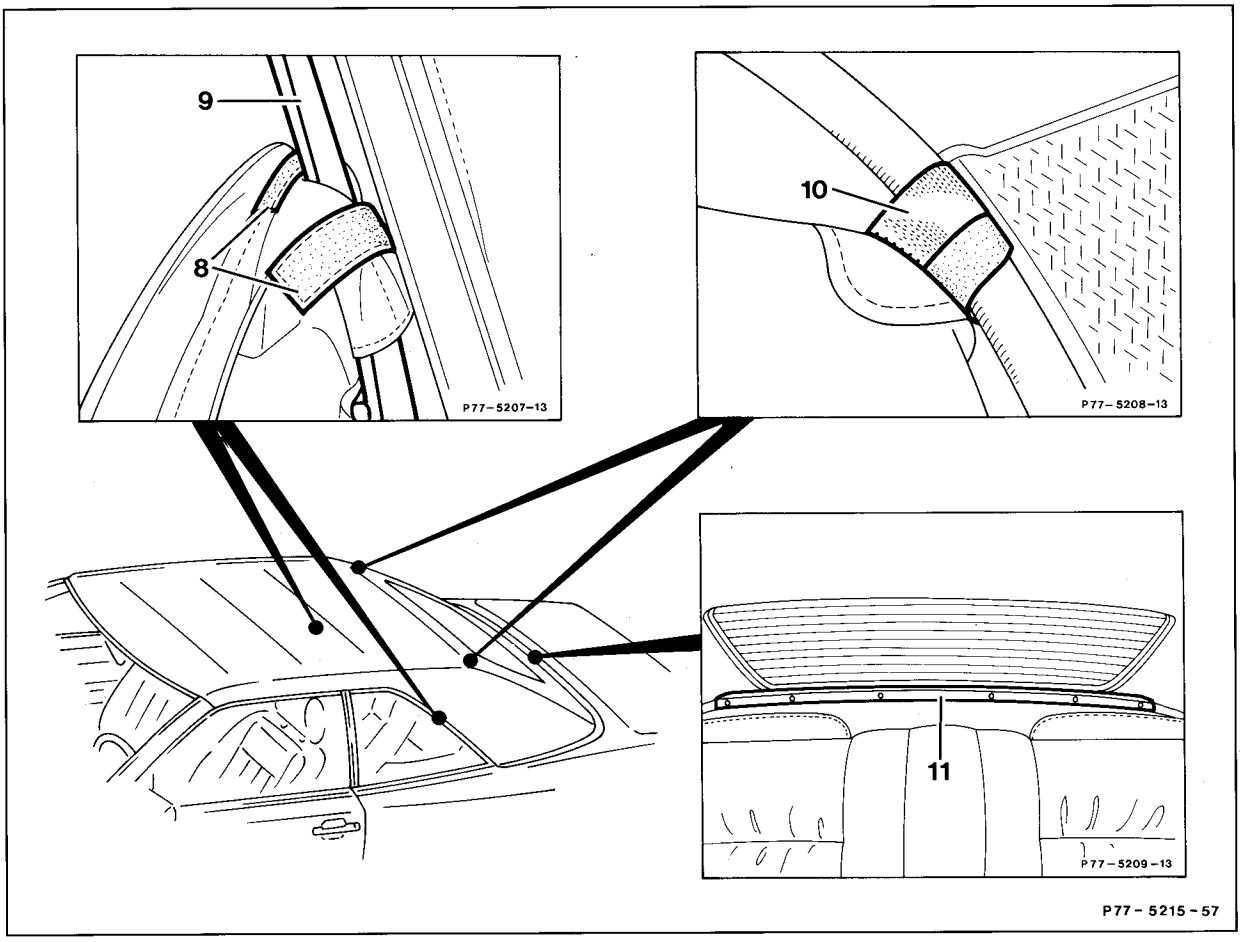

Velcro strip (8) on main pillar (9)	. . . . .	open, close (item 8).
Velcro strip (10) on corner brace	. . . . .	open, close (item 5).
Cover (11) on soft top bow	. . . . .	remove, install.
Headlining	. . . . .	detach from, glue onto soft top bow (item 16).

10 Close sun roof, lift approximately halfway at the rear and, in this position, check whether the lateral visors can be perfectly moved in and out.

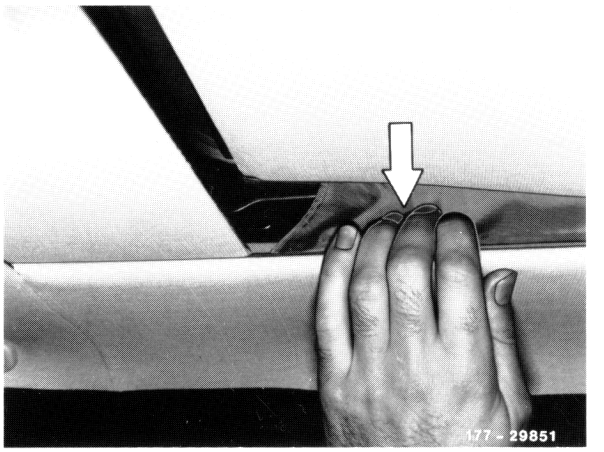

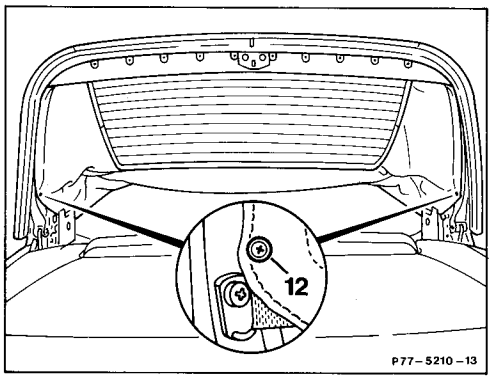

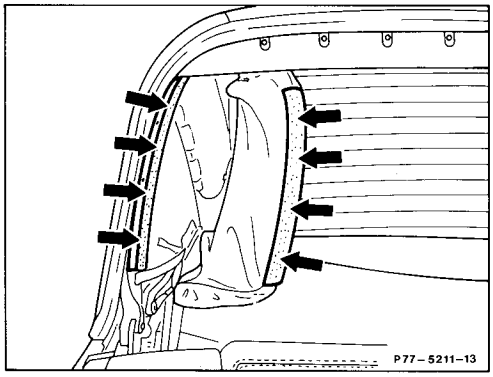

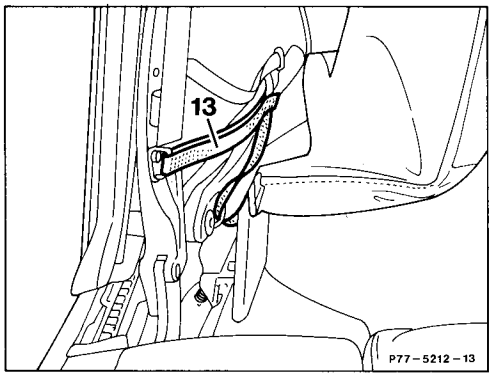

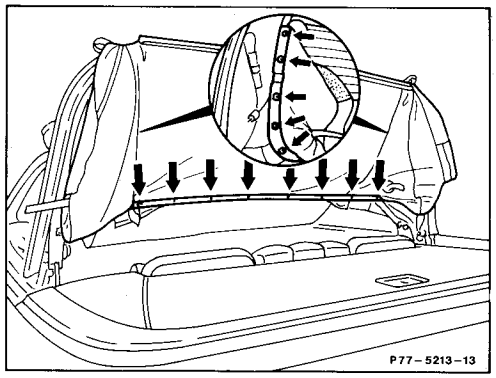

P77 - 5216 - 57

Screw (12)	unscrew, screw in.
Headlining (arrows)	pull off soft top bow, install (item 14).
Velcro strip (13)	open, close (item 13).
Headlining	move toward rear over soft top bow and unscrew nuts (arrow) below and on side of window, screw on.
Headlining	remove together with frame, install.

055.3

Commercially available tool

Designation	e.g. company
Simplex A tacking pliers	Carl Lohrmann GmbH + Co Porschestraße 6 7337 Albershausen

1 Attach headlining with frame to window frame.

2 Attach bracket (34).

3 Screw on and tighten nuts.

⚠
Tighten nuts uniformly to prevent waves in the window gasket.

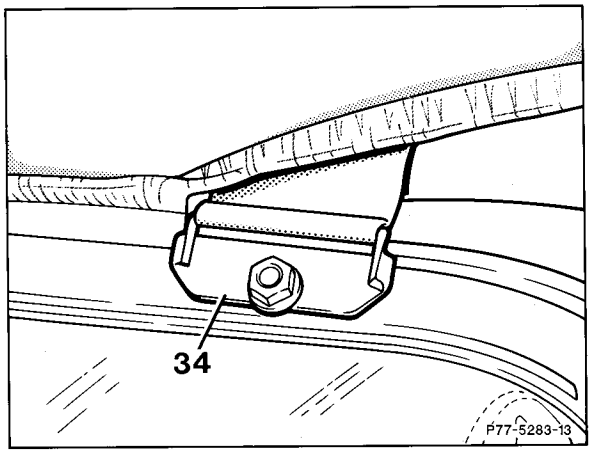

4 Open soft top compartment cover, put down soft top bow and move soft top to horizontal position.

5 Fasten Velcro strip (10) on corner brace.

⚠
Fasten the Velcro strip (10) as tightly as possible.

6 Close soft top at front.

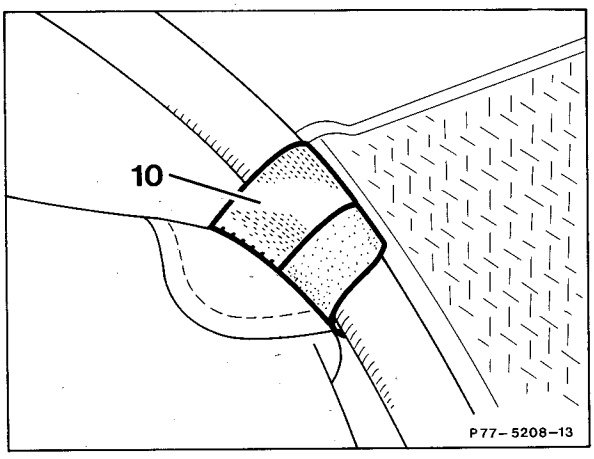

7 Press rail (7) onto brace, screw in screw (18) and hook headlining onto soft top frame. Press hooks on hook strip together slightly.

Installation note
Start pressing on rail (7) at end of brace.

8 Raise soft top bow.

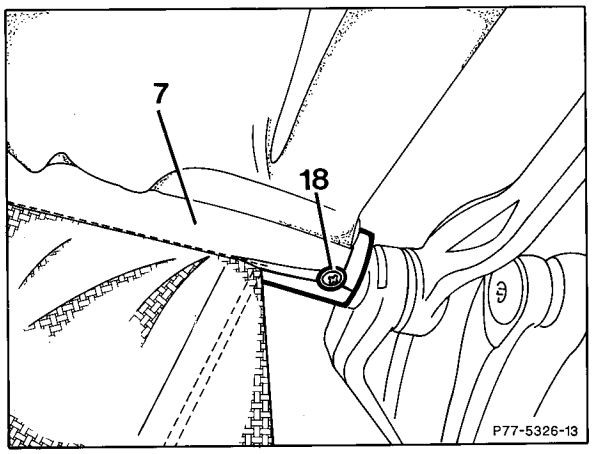

9 Fasten Velcro strip (8) to main pillar (9).

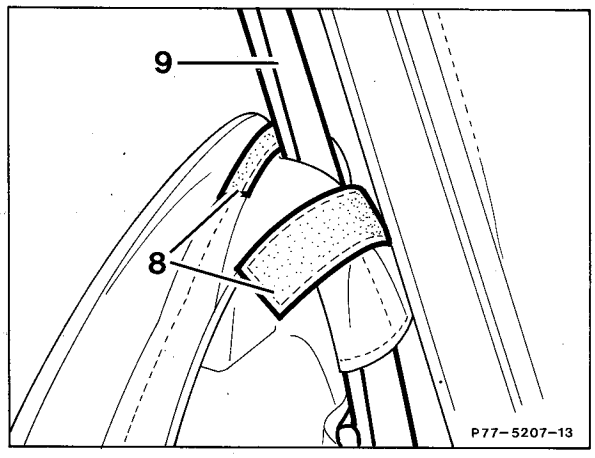

⚠
Fasten the Velcro strip (8) so that the two strips are exactly on top of one another.

10 Put soft top bow down.

11 Move soft top to vertical position.

12 Fasten Velcro strip (4) to guide arm.

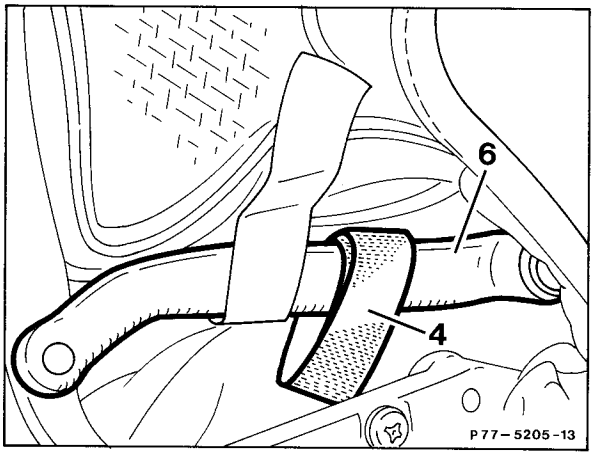

⚠
Fasten Velcro strip (4) so that a distance of approx. 15 mm is present between the guide arm (6) and Velcro strip (4).

13 Completely lock soft top.

14 Thread Velcro strip (13) through soft top bow and corner brace (direction of arrow), tension, stick together and secure with clips 129 988 26 78 (3 each).

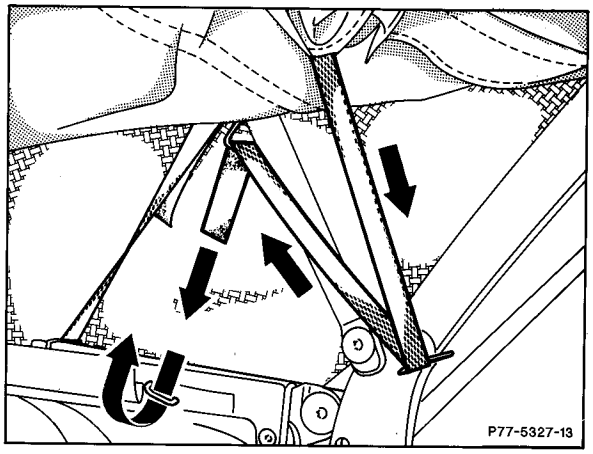

⚠
Tension the Velcro strip (13) so that the fastening seam on the headlining is no longer visible.

15 Attach headlining to soft top bow at side.

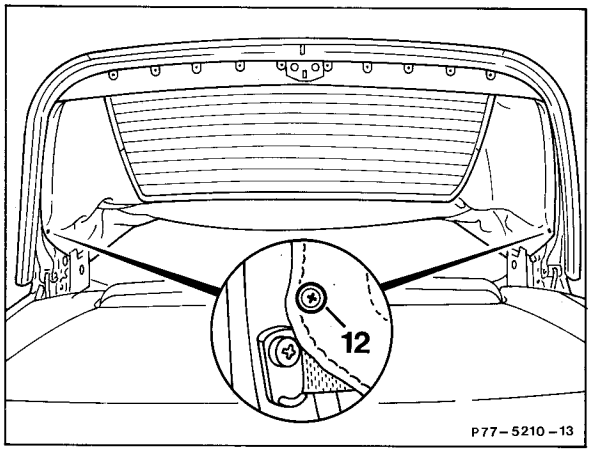

⚠
When installing maintain uniform gap between headlining and soft top compartment cover.

16 Screw in screw (12).

17 Apply glue to soft top bow (arrows) and glue on headlining.

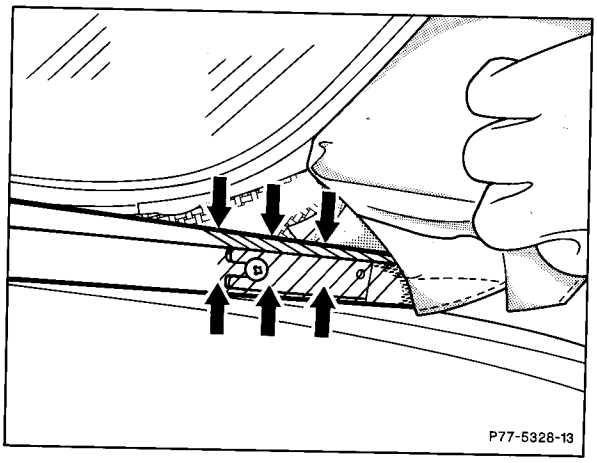

⚠

Glue headlining on so that folds do not form in the headlining when the soft top bow is locked in place after installation of the cover (11).

18 Install cover (11).

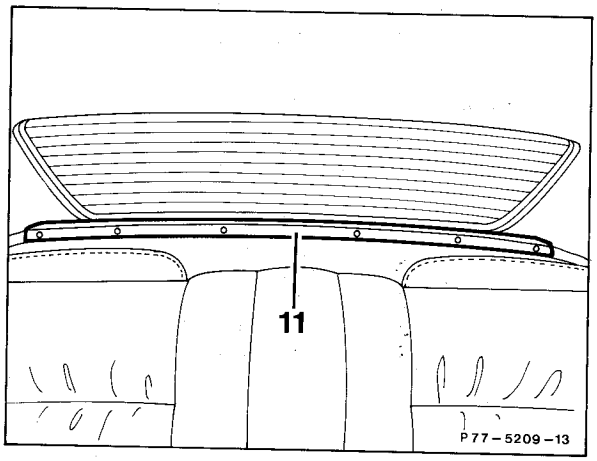

Note

When installing a new headlining it is necessary to cut off the projecting section of headlining after gluing onto the soft top bow.

19 Glue headlining to soft top frame with slight tension and screw in screw (3).

20 Fold soft top down into soft top compartment.

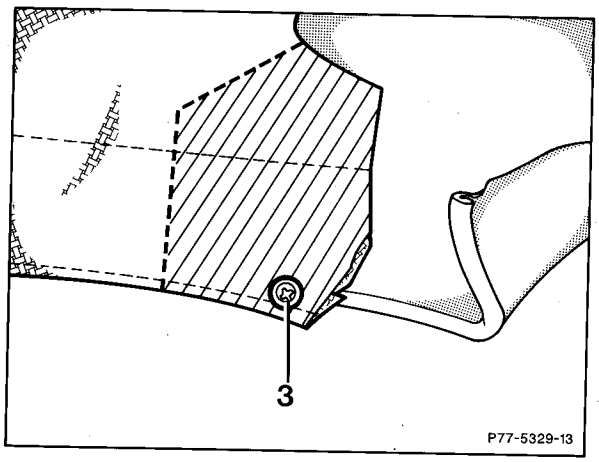

21 Install cover (2) and recessed handle (1).

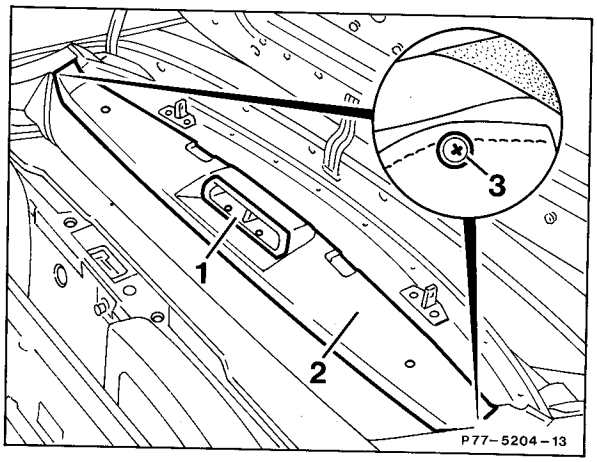

77-100 Removal and installation of tilting/sliding sun roof top panel

Special tool

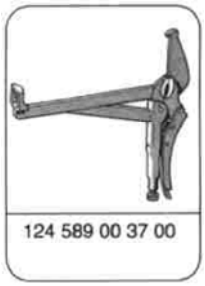

Removal

---

1 Remove tilting/sliding sun roof headlining (77-050).

2 Remove slide rail left and right.

3 Close tilting/sliding sun roof.

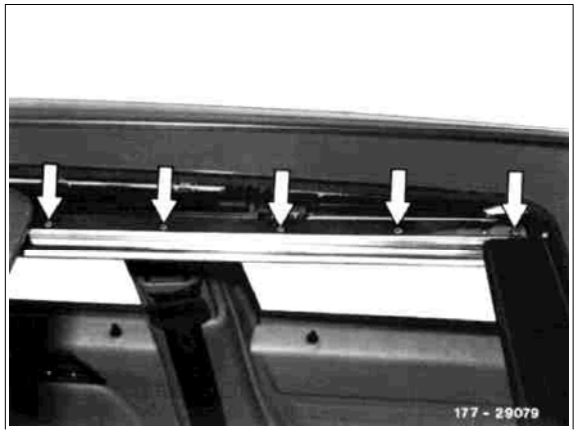

4 Unscrew nuts left and right.

5 Remove tilting/sliding sun roof top panel in upward direction.

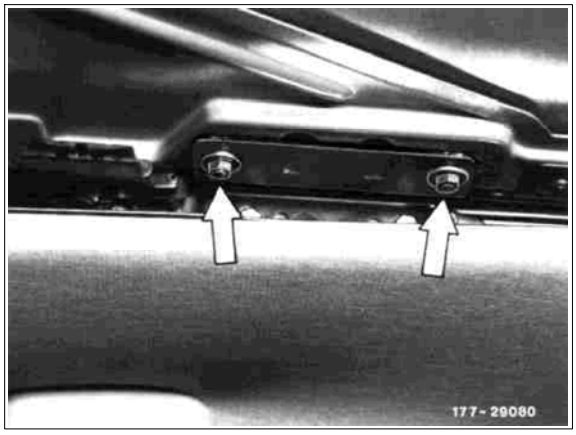

6 Make two centering pins (unless already provided).

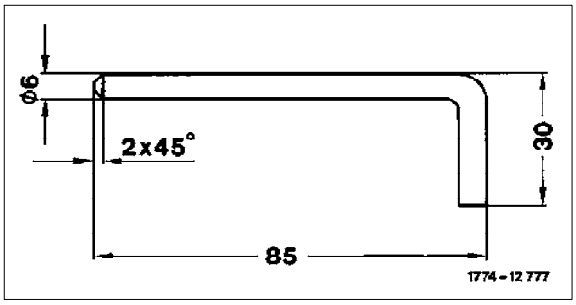

7 Plug centering pin into centering bore at left and right.

8 Remove interior rear view mirror.

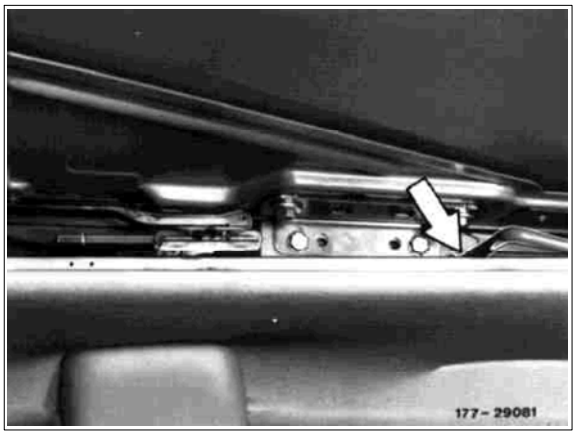

Installation

---

9 Insert tilting/sliding sun roof top panel from above, position nuts, tension tilting/sliding sun roof top panel with special tool, part no.
124 589 00 37 00 and tighten nuts.

10 For further installation proceed in reverse order.

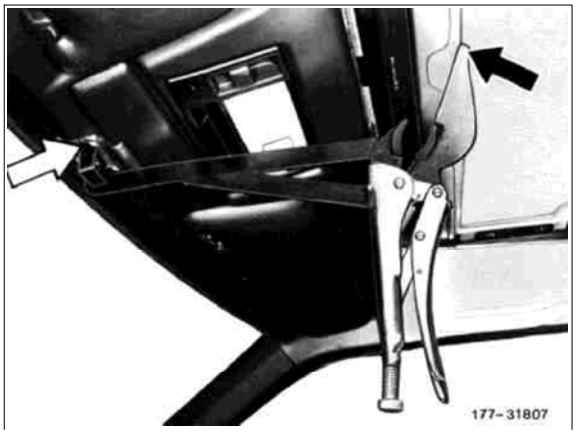

Adjusting sliding shoes at front

1 Remove tilting/sliding sun roof headlining (77–050).

2 Loosen fastening screws on sliding angle pieces front left and right and push sliding angle pieces inward until the sliding shoes are abutting laterally and the tilting/sliding sun roof is located accurately in center of cutout.

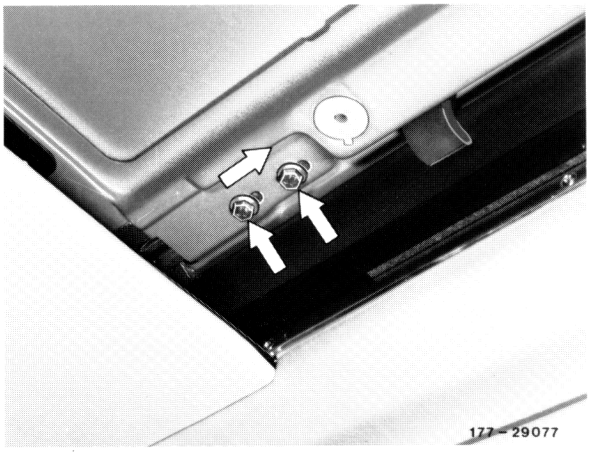

3 Since the tilting/sliding sun roof frame has tolerances with regard to its total width, the lateral clearance must be checked at several points. For this purpose, unsrew control cable on sliding carrier and move tilting/sliding sun roof top panel manually.

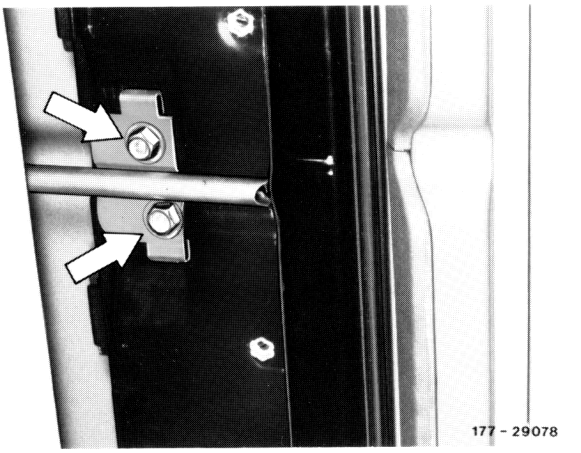

Height adjustment, front

4 Open tilting/sliding sun roof and loosen fastening screws on slide rails.

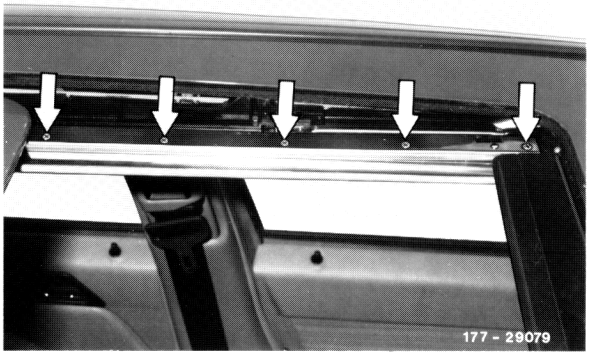

5 Adjust height adjusting screw at left and right in such a manner that the front edge of the closed tilting/sliding sun roof is 0 to 1 mm deeper than the roof outer skin.

6 Tighten fastening screws of sliding rails.

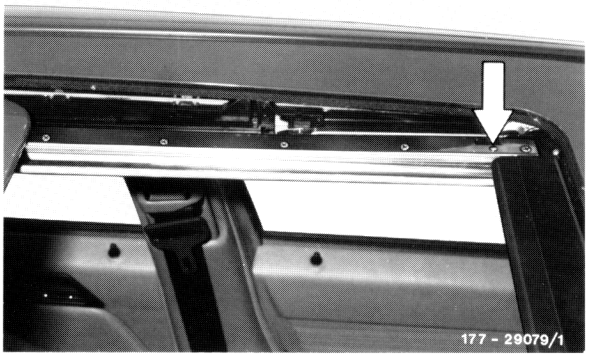

Height adjustment, rear

7 Make two centering pins (unless already available).

8 Remove tilting/sliding sun roof headlining (77–050). Then close sliding roof.

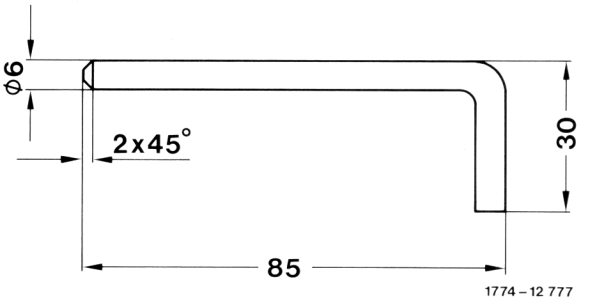

9 Loosen screws on retaining brackets left and right.

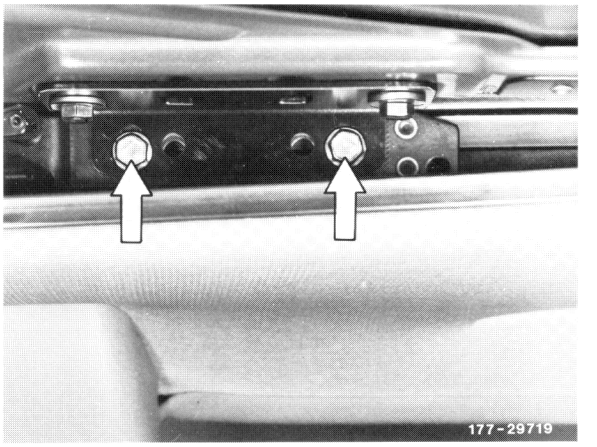

10 Plug centering pin into centering bore left and right.

11 Adjust tilting/sliding sun roof top panel in such a manner that it is flush with roof or up to 1 mm deeper starting from slide position at the rear in the curved area.

12 Tighten screws on retaining brackets left and right.

13 Pull out centering pin and install tilting/sliding sun roof headlining.

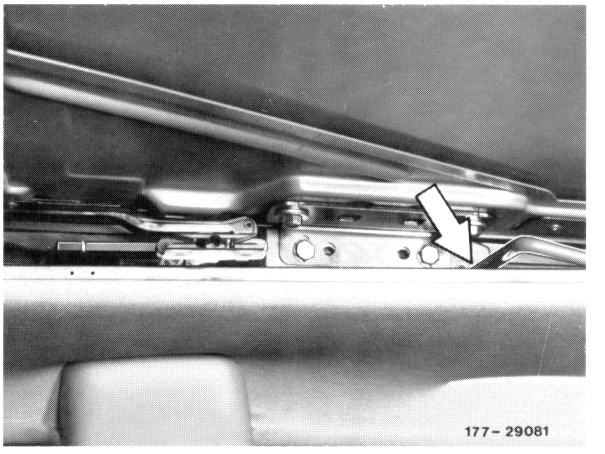

11012

77–130 Removal and installation of gasket and holding rails on sun roof opening

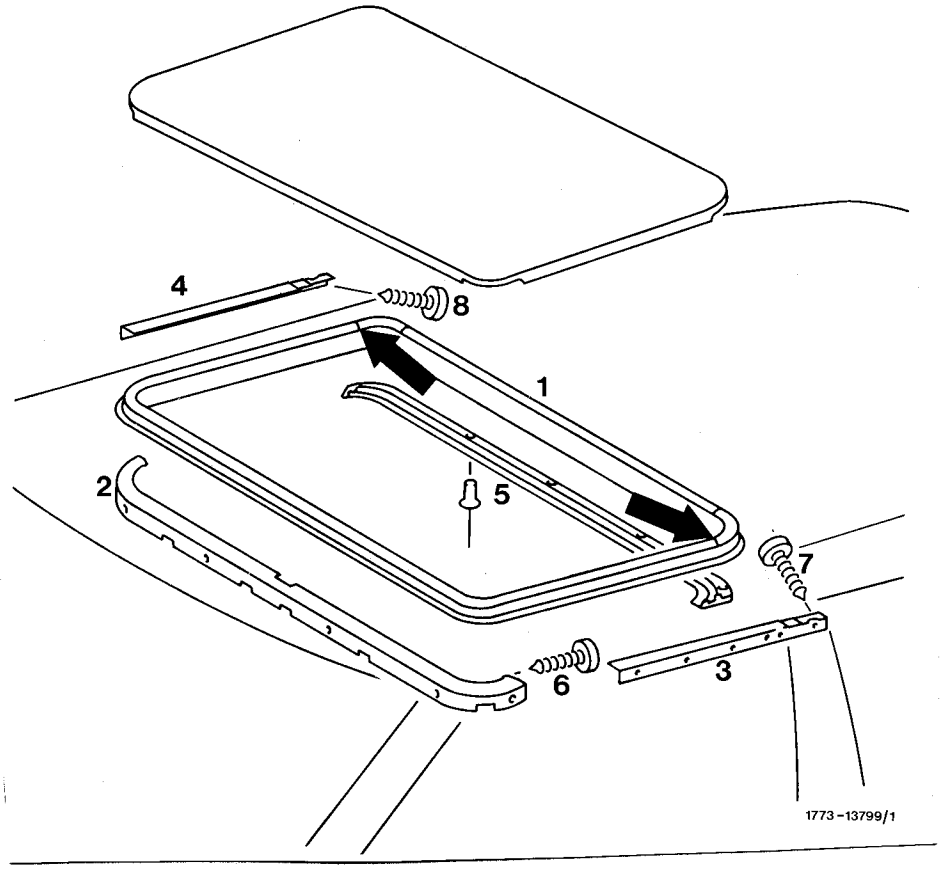

Sun roof	open, do not remove
Installation position of gasket	mark on roof cutout at joins (arrows)
Gasket (1)	pull out of holding rails 2, 3, 4 and 5
Wind deflector	remove and install (77–250)
Screw (6)	unscrew 6 ea., screw in
Holding rail (2)	remove and install (refer to installation note)
Screw (7) and (8)	unscrew 8 ea., screw in
Holding rails (3) and (4)	push toward the rear and remove in upward direction

Holding rail (5)	can be removed and installed only upon removal of sun roof frame and drilling out of rivets (11 each)
Gasket (9)	push into holding rails 2, 3, 4 and 5. The serrations on plug-in profile should point in upward direction.

Installation note

To make sure that the gasket (1) obtains an adequate hold in holding rails 2, 3 and 4, a gap dimension of 3 mm between holding rail and roof panelling should be maintained.

Removal

1 Remove tilting/sliding sun roof headlining (77–050).

2 Unscrew guide plate on sliding carrier and disengage.

3 Push actuating switch to "Lift roof" and let control cable run out of gear unit.

4 Pull out control cable in forward direction.

Note: If the control cable cannot be moved with electric drive, use emergency crank.

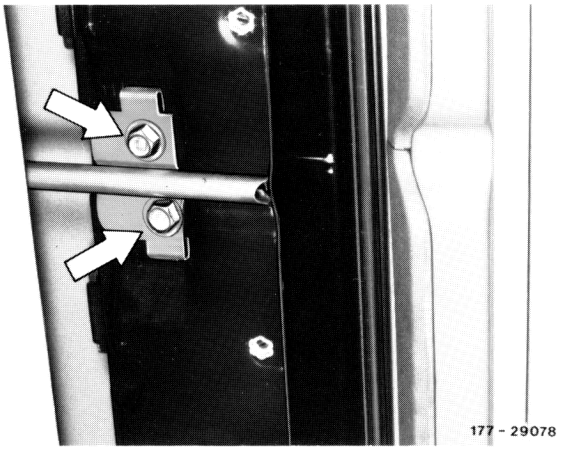

5 If the control cable cannot be pulled out, disassemble gear unit of electric drive (77–180).

6 If upon disassembly of gear unit the control cable can still not be removed, it has been distorted in the tube, which should then be removed (77–150).

Installation

7 Coat coil at end of new control cable with MB lubricating paste, part no. 001 989 14 51, and introduce into tube.

Note: When installing control cable, make sure that the guide member on control cable slides into opening of tube.

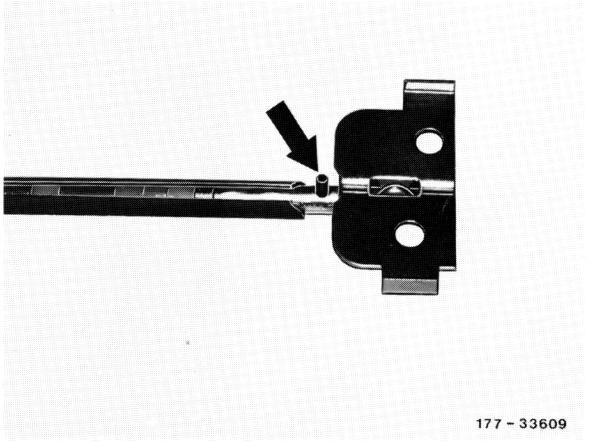

8 It should be possible to pull the control cable out with a force of max. 80 N. Checkup with a spring scale.

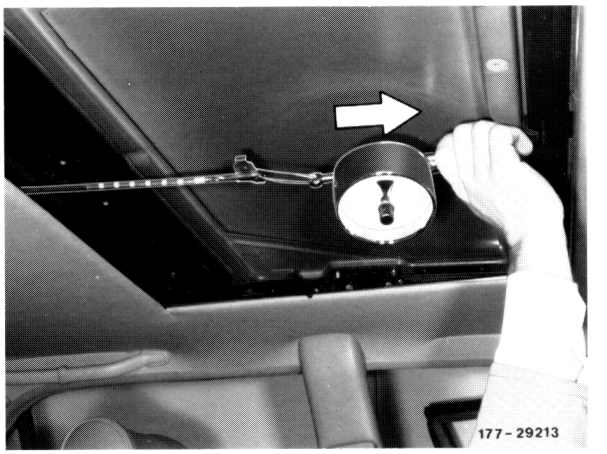

9 Slip control cable completely into tube, push actuating switch to "Lower roof" and let cable control run into gear unit until the bores of guide plate and sliding carrier are overlapping.

Note: If the cable control does not enter the gear unit, loosen fastening screws on holder of drive unit.

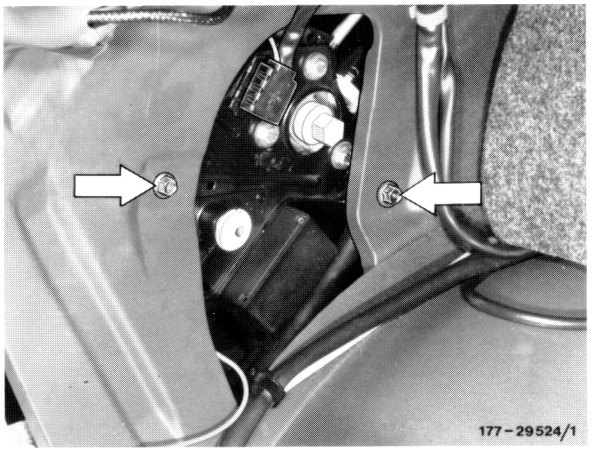

10 Screw guide plate to sliding carrier.

11 Install sun roof headlining.

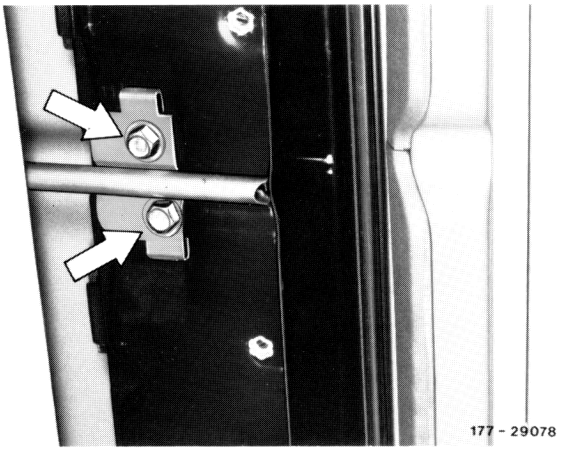

Adjustment

1 Make centering bolt (if not available).

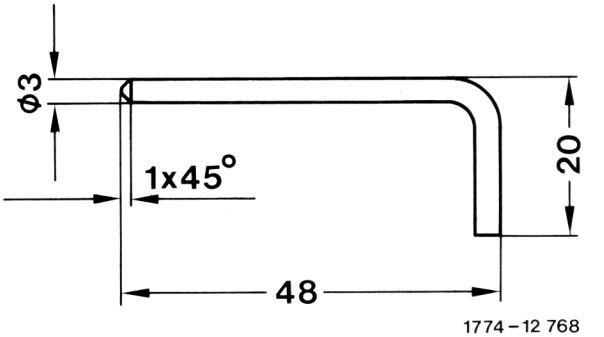

2 Remove trim on rear fender inside left.

3 Push actuating switch to "Lift roof" until the sun roof top panel is completely lifted.

4 Make adjusting knob into adjusting position (pull out up to stop and push in for approx. 3 mm).

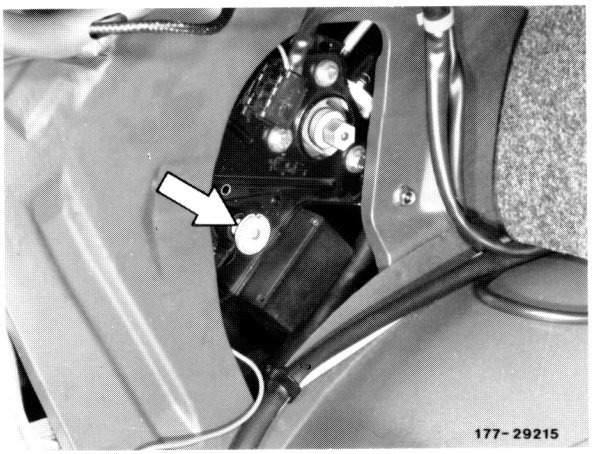

5 Turn adjusting knob until the centering pin can be completely plugged into centering bore and the notch on knob points in direction of bore.

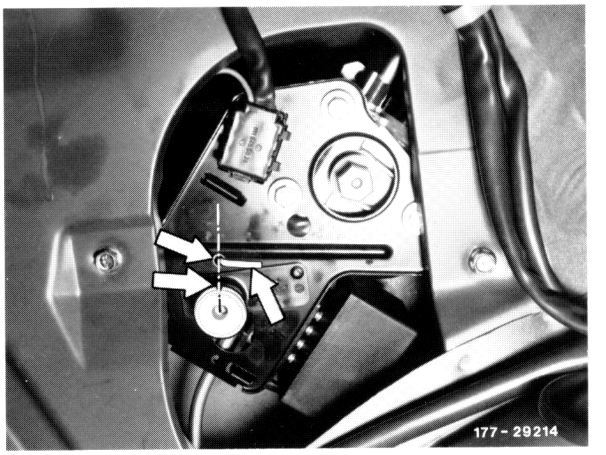

6 Push adjusting knob and remove centering pin.

Caution!
With centering bolt plugged in or adjusting knob pulled, do not operate sun roof motor, since otherwise the control unit may be damaged or the setting may be maladjusted.

7 If the sun roof does not close accurately with this basic adjustment, move adjusting knob again into adjusting position and perform precision adjustment by turning knob:

Turn knob clockwise	=	sun roof forward
Turn knob counterclockwise	=	sun roof backward

Reference values:
One turn of knob changes location of sun roof by approx. 45 mm.

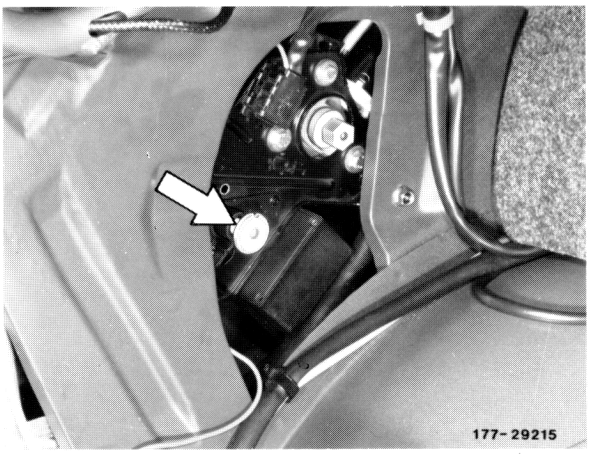

8 Push adjusting knob and actuate sun roof switch.

9 Mount trim on rear fender inside left.

Removal

1 Remove control cable (77–140).

2 Remove motor and gear unit (77–180).

3 Remove sun roof top panel (77–100).

4 Detach headlining starting from the rear up to sun roof cutout (Group 68).

5 Pull damping from rear pillar left.

6 Unscrew holding plate on sun roof frame and force off cover above tube.

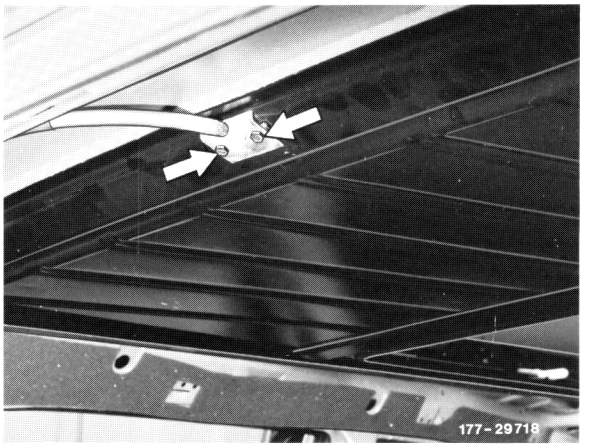

7 Unscrew fastening clamp and belt guide fitting on rear pillar left.

8 Loosen rear part of sun roof frame.

9 Push sun roof frame slightly downward and run out tube at sun roof frame rear, sliding tube into trunk for this purpose.

10 Remove tube in forward direction.

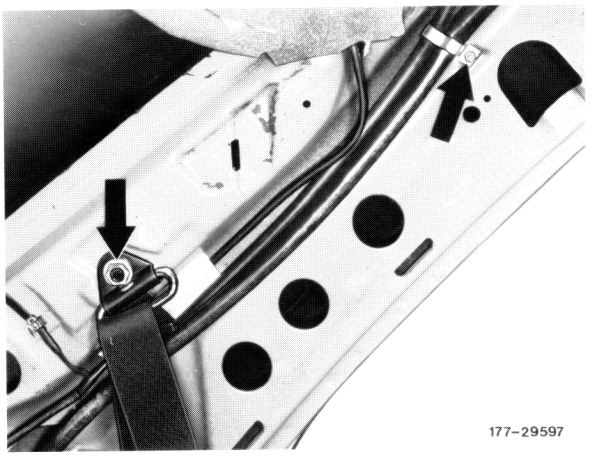

Installation

11 Introduce new tube from direction of vehicle interior first into trunk and then into sun roof frame.

Caution!
Do not distort tube during installation, since otherwise the control cable will bind.

12 Fasten tube to sun roof frame and to rear pillar.

13 Install holder with motor and gear unit.

14 For further installation proceed in reverse order.

77–170 Removal and installation of angular lifting arm on tilting/sliding sun roof

Special tools

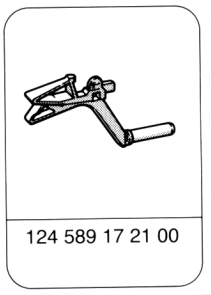

124 589 17 21 00

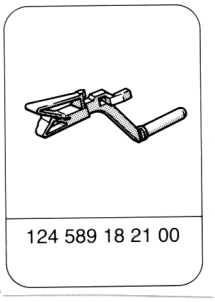

124 589 18 21 00

Removal

1 Remove tilting/sliding sun roof top panel (77–100).

2 Unscrew control cable from sliding carrier.

3 Remove fastening angle bracket for tilting/sliding sun roof top panel from lateral guide (guide block) in upward direction and remove water gutter.

4 Unscrew sliding carrier and remove.

5 Slide angular lifting arm up to stop in forward direction, tilt upwards and remove at an angle in inward direction.

Note

On model 124 coupe, prior to removing angular lifting arm, unscrew lateral guide (guide block) from tilting/sliding sun roof frame (lower arrow).

Installation

Assembly note
On model 124 coupe, the angular lifting arms must be fastened at holes identified by an arrow.

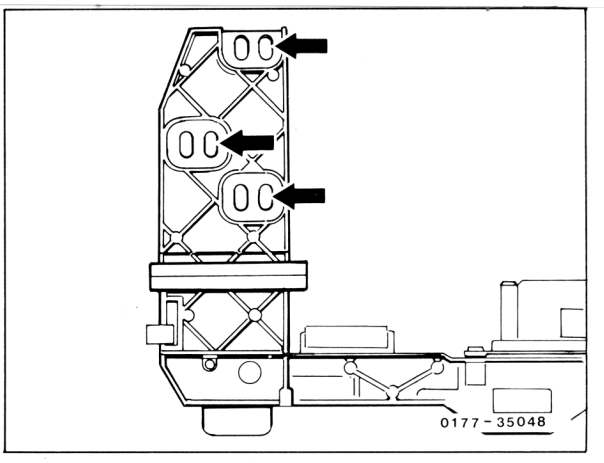

6 Grease angular lifting arm prior to installation with MB lubricating paste, part no. 001 989 14 51, on sliding shoes and on moving parts.

Note: During installation, pay attention to correct seating of sliding shoes (arrows).

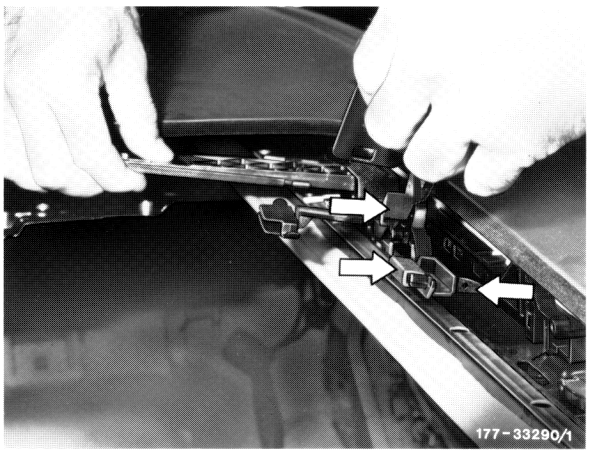

7 Install angular lifting arm.

8 Install sliding carrier, at the same time push angular lifting arm slightly in outward direction by means of a screwdriver and tighten.

9 Install water gutter.

10 Perform basic adjustment on angular lifting arm mechanism. For this purpose, plug adjusting gauges, part no. 124 589 17 21 00 left and 124 589 18 21 00 right into guide block (lateral guide) and groove in angular lifting arm.

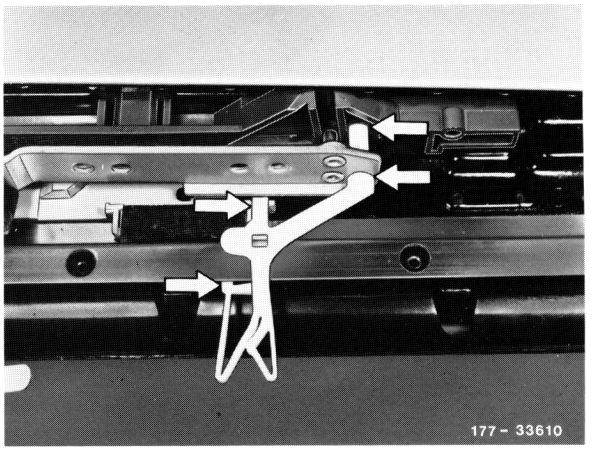

Shown with tilting/sliding sun roof holding angle bracket screwed off

11 Install tilting/sliding sun roof top panel (77–100).

Note

Pull off adjusting gauges only following installation of tilting/sliding sun roof top panel.

12 Screw control cable to sliding carrier.

13 Actuate tilting/sliding sun roof cover several times in all positions.

14 Check mark on holder of tilting/sliding sun roof headlining in relation to mark on slide rail.

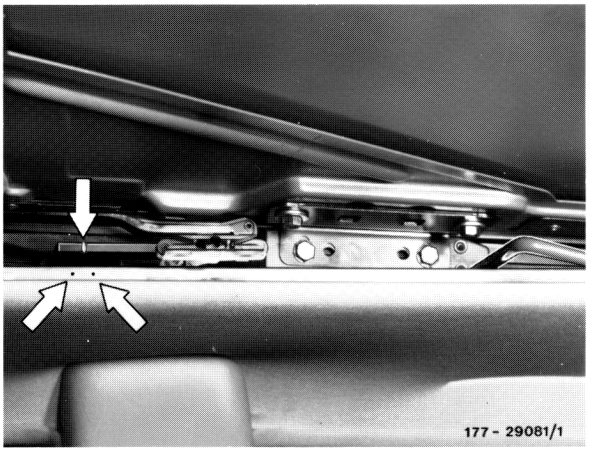

Note: If the mark is outside notches on slide rail, readjust control cable (77–140).

15 For further installation proceed in reverse order.

A. Control cable can be removed

Removal, installation

1 Remove sun roof headlining.

2 Unscrew guide plate on sliding carrier and disengage.

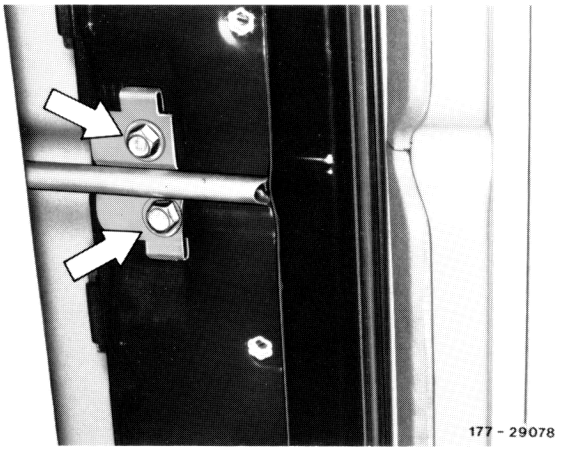

3 Let control cable run out of sun roof motor gear unit in forward direction.

4 Remove cover in trunk, left.

5 Pull off electric connection on sun roof motor and unscrew fastening screws.

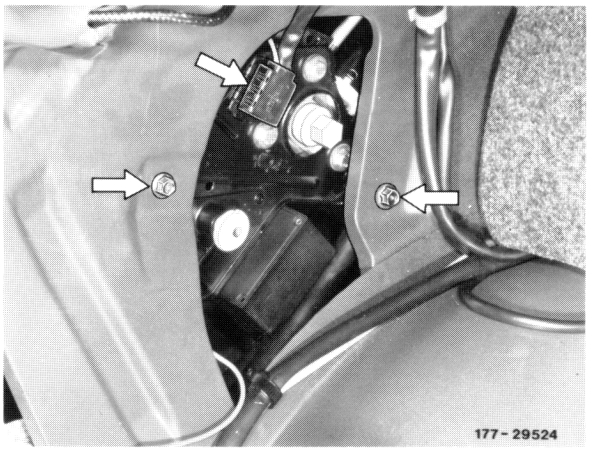

6 Separate tube as well as outlet tube from gear unit.

7 Remove holder with motor and gear unit.

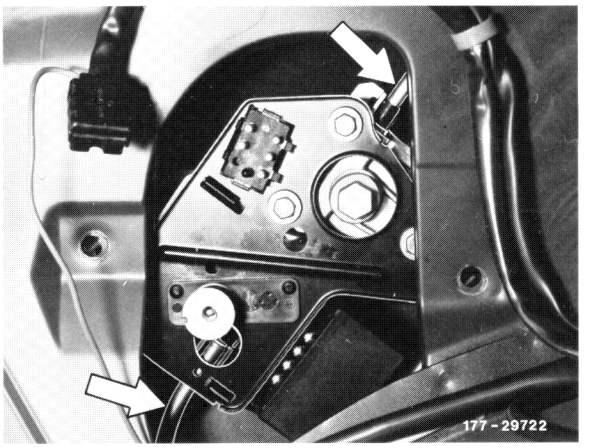

8 Install in reverse order.

Note: When fastening clips of both tubes make sure that bead on tube slips into groove on gear unit.

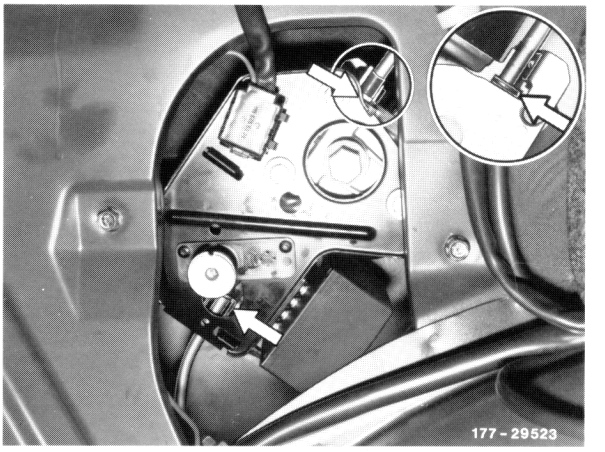

B. Control unit cannot be removed

Removal

1 Remove cover in trunk, left.

2 Force off plastic cap for emergency crank drive and unscrew the hex. nut (17 mm) underneath, while holding shaft of gear unit in position by means of an open-end wrench (6 mm) at the place provided for this purpose.

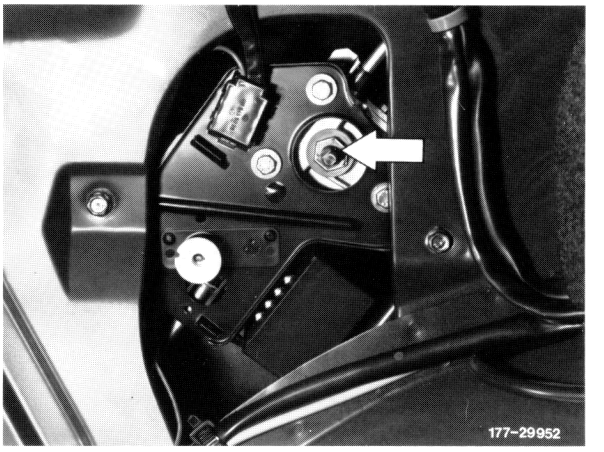

3 Unscrew fastening screws on holder and pull off electrical connection on sun roof motor.

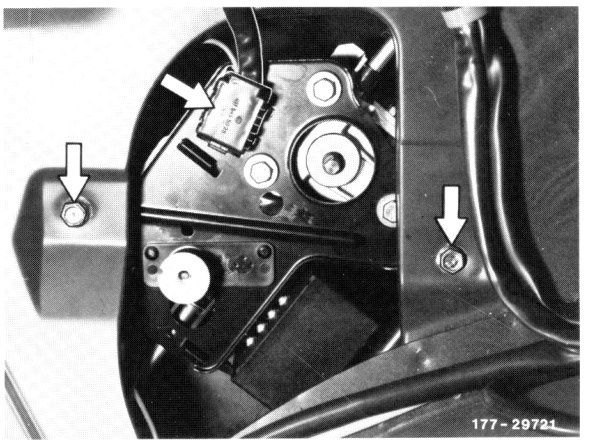

4 Remove plastic cover from holder.

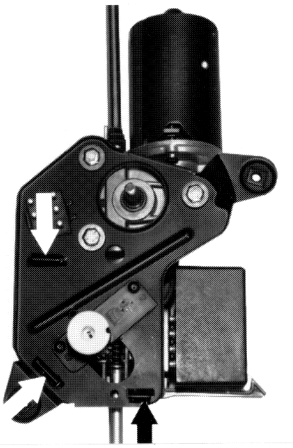

Shown with motor removed

5 Slightly turn holder with motor and unscrew gear unit housing on back.

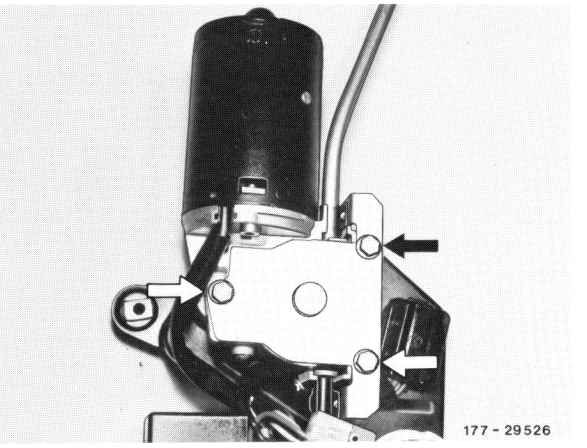

Shown with motor removed

6 Remove gear unit cover, unclipping holding clamp for this purpose, and remove gearwheel.

7 Remove holder with motor and gear unit.

8 Pull control cable forward out of tube.

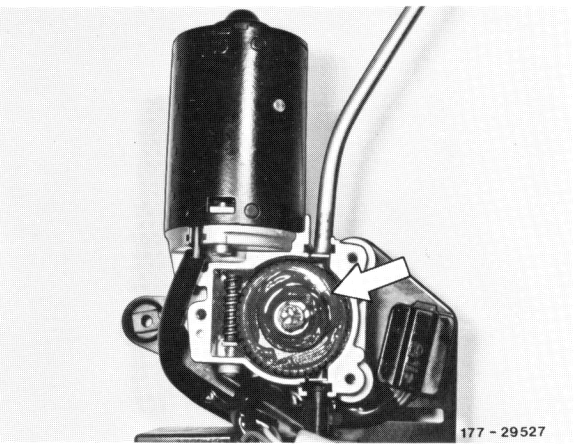

Shown with motor removed

Installation

9 Assemble gear unit.

10 Install holder with motor and gear unit.

Note: When fastening both tubes with clips, make sure that the bead on tube slips into groove on gear unit.

11 For further installation proceed in reverse order.

12 Adjust slip clutch on gear unit (77–195).

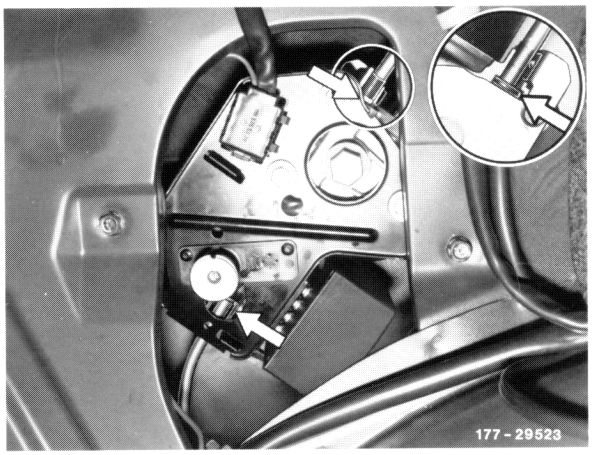

77–195 Checking and adjusting slip clutch for sun roof motor

Checking

1 Open sun roof by half.

2 Open cover above emergency crank drive and fit 16 mm wrench socket onto emergency crank drive.

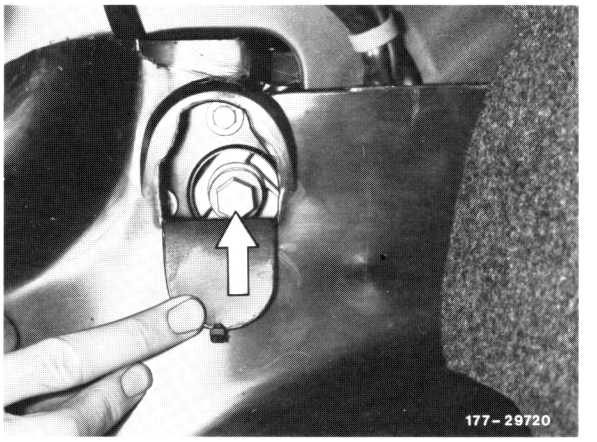

3 Fit torque wrench onto wrench socket and hold in place.

4 Have a second mechanic operate sun roof switch and read off torque. Nominal value 6–7 Nm.

5 Pull off wrench socket and close opening above emergency crank drive.

Adjustment

1 Open cover above emergency crank drive.

2 Pull off plastic cap for emergency crank drive and screw hex. nut underneath tighter to increase torque, and slacken to release torque.

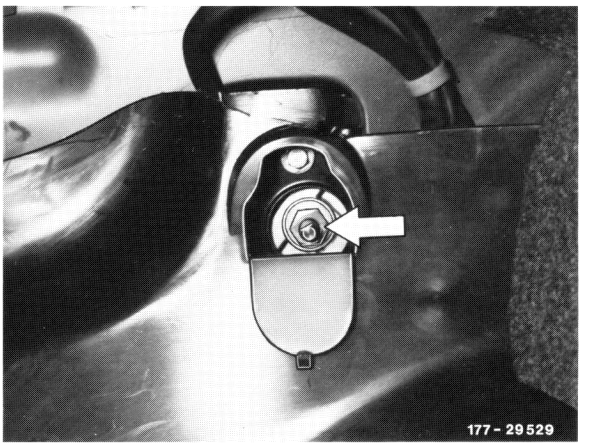

Note: Hold the shaft of the gear unit by means of an open-end wrench (6 mm) at the place provided for this purpose to make sure that the shaft will not rotate at the same time.

3 Turn hex. nut max. by 60°, then push on plastic cap and check torque, readjust if required.

Attention!
Make sure that slip clutch is not locked.

4 Close opening above emergency crank drive.

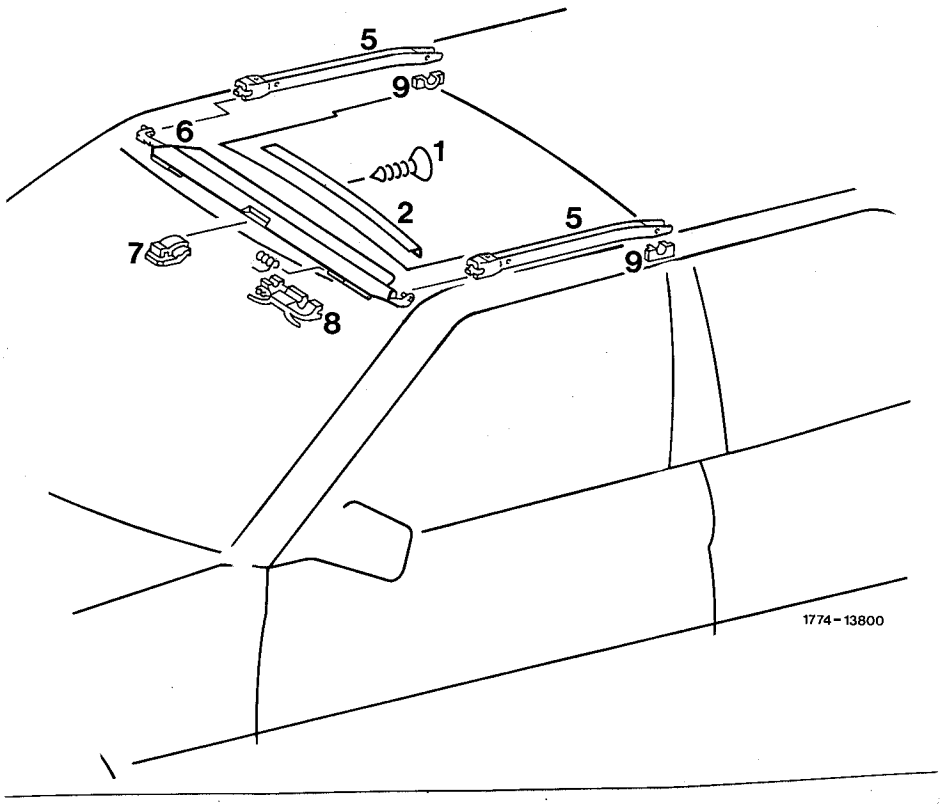

Screw (1)	unscrew 6 each, screw in
Chrome-plated rail (2)	remove and install
Holddown (5)	unclip and clip in 2 each from mount (9) and pull out of wind deflector (6) toward the rear
Wind deflector (6)	pull out of center mount (7)
Wind deflector (6)	carefully push out of duct including mount (8) left and right by means of a screwdriver
Wind deflector (6)	remove in upward direction

Adjusting

If the wind deflector brushes against sun roof top panel when entering recess, the height can be adjusted by means of adjusting screw (arrow). If the wind deflector rattles in the center mount, the mount can be slightly pre-stressed. For this purpose, hold wind deflector in place at outer mounts, pull out of center mount in center range and bend slightly in upward direction. Gap dimension when closing between top panel and wind deflector 5 mm.

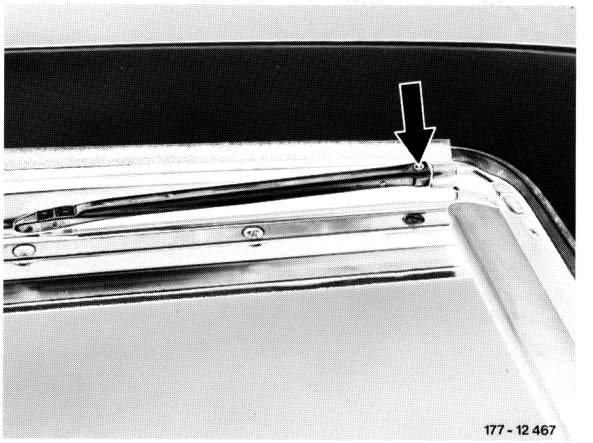

Special tools

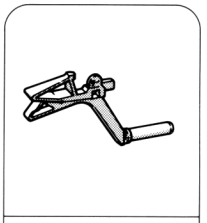

124 589 17 21 00

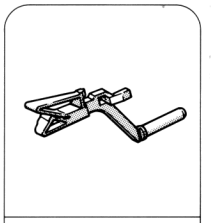

124 589 18 21 00

Removal

1 Remove tilting/sliding sun roof top panel (77–100).

2 Remove headlining (Group 68).

3 Remove control cable (77–140).

4 Unscrew tube on tilting/sliding sun roof frame rear and remove cover.

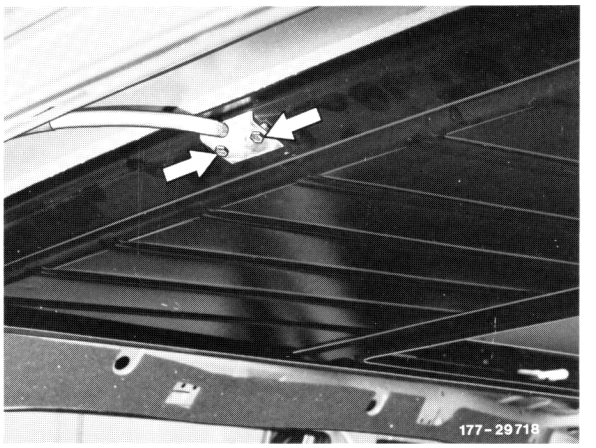

5 Pull off water drain hoses and remove screws.

6 Lower tilting/sliding sun roof frame at front and push in driving direction, extending the tube on tilting/sliding sun roof frame rear.

Caution!
Wear protective gloves to eliminate any risk of injury when removing tilting/sliding sun roof frame caused by sliding carrier.

7 Remove tilting/sliding sun roof frame through rear door.

Installation

Caution!
Prior to installing tilting/sliding sun roof frame, plug adjusting gauges part no. 124 589 17 21 00 left and 124 589 18 21 00 right into guide block (lateral guide) and groove in angular lifting arm.

Pull off adjusting gauges only following installation of tilting/sliding sun roof top panel.

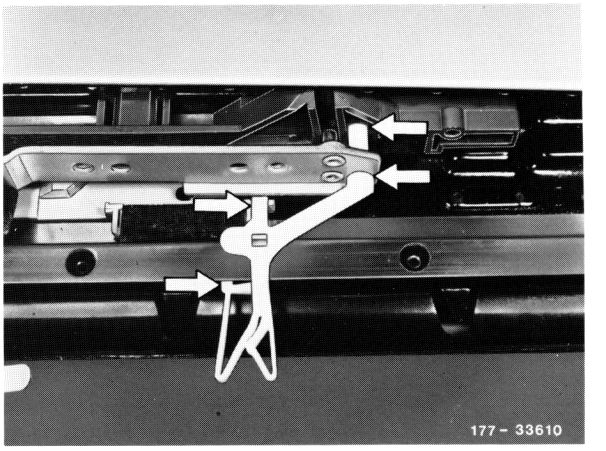

Shown with tilting/sliding sun roof retaining bracket removed

8 Lift tilting/sliding sun roof frame through rear door opening into vehicle interior.

Note: When installing tilting/sliding sun roof frame make sure of perfect seal between frame and body.

9 Screw on tilting/sliding sun roof frame, paying attention to correct installation position of tube and water drain hoses.

Note: The two rear fastening screws have metric threads. To make sure that the tilting/sliding sun roof frame centers itself in relation to tilting/sliding sun roof cutout, tighten the two front fastening screws at left and right first.

10 Fasten tube to tilting/sliding sun roof frame rear and install cover.

11 For further installation proceed in reverse order.

A. General

1st version up to approx. 08/90

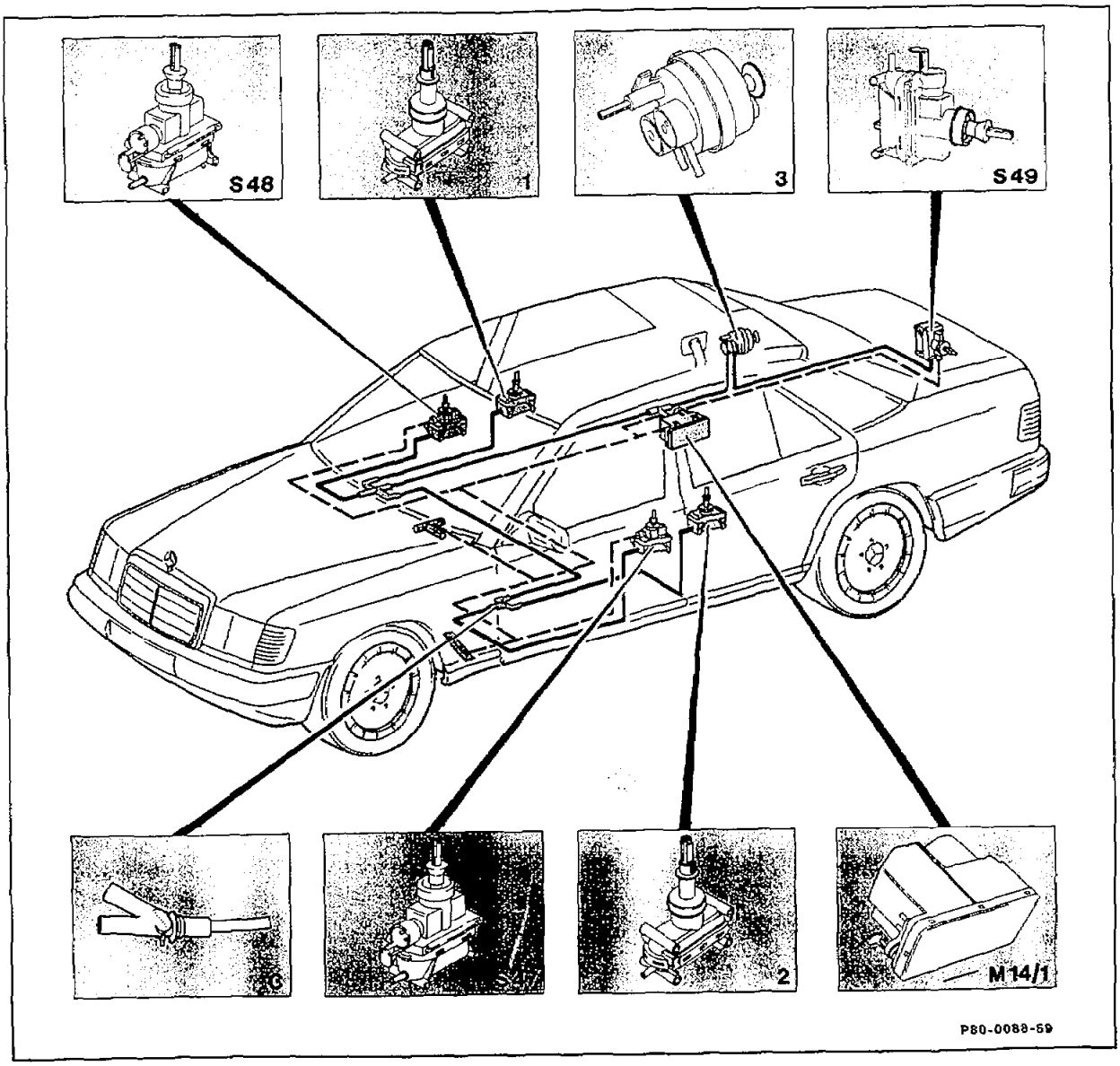

1	Right rear door actuator	M14/1	Central locking system supply pump
2	Left rear door actuator	S47	Front left door actuator
3	Fuel filler flap actuator	S48	Front right door actuator
C	Distributor	S49	Trunk lid actuator
- - - -	Electric lead	——	Pneumatic line

2nd version as of approx. 09/90

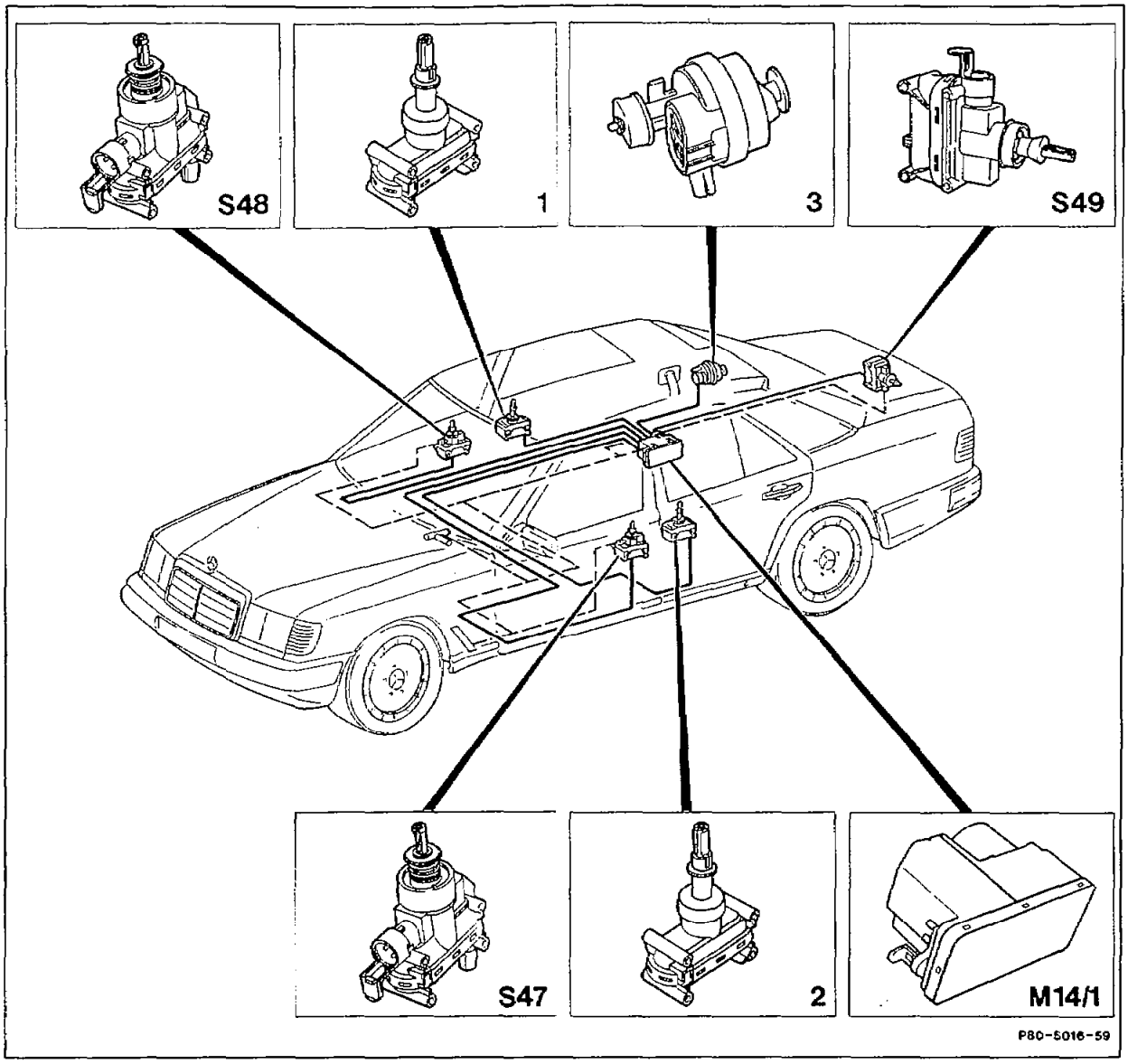

1	Right rear door actuator	M14/1	Supply pump, central locking system (ZV)
2	Left rear door actuator	S47	Left front door actuator
3	Fuel filler flap actuator	S48	Right front door actuator
- - - -	Electric lead	S49	Trunk lid lock actuator
		——	Pneumatic line

3. Version for (D) only as of 03/94 and vehicles with code 885

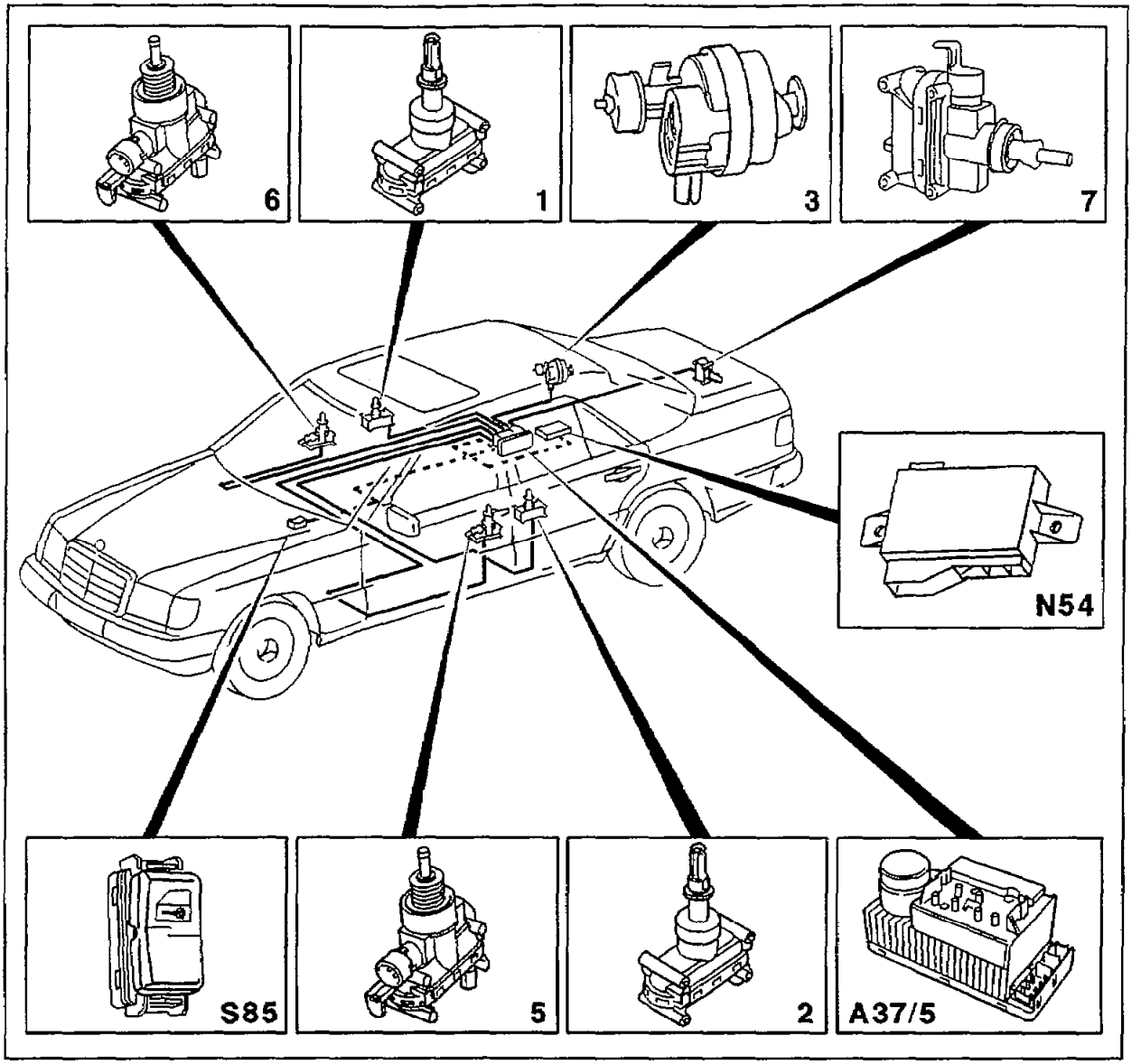

P80-5232-59

1	Right rear door actuator	A37/5	Pneumatic control unit
2	Left rear door actuator	N54	Infrared remote control unit for central locking system
3	Tank flap actuator	S85	Interior central locking system switch
5	Left front door actuator	——	Pneumatic line
6	Right front door actuator	- - - -	Electric lead
7	Trunk lid actuator		

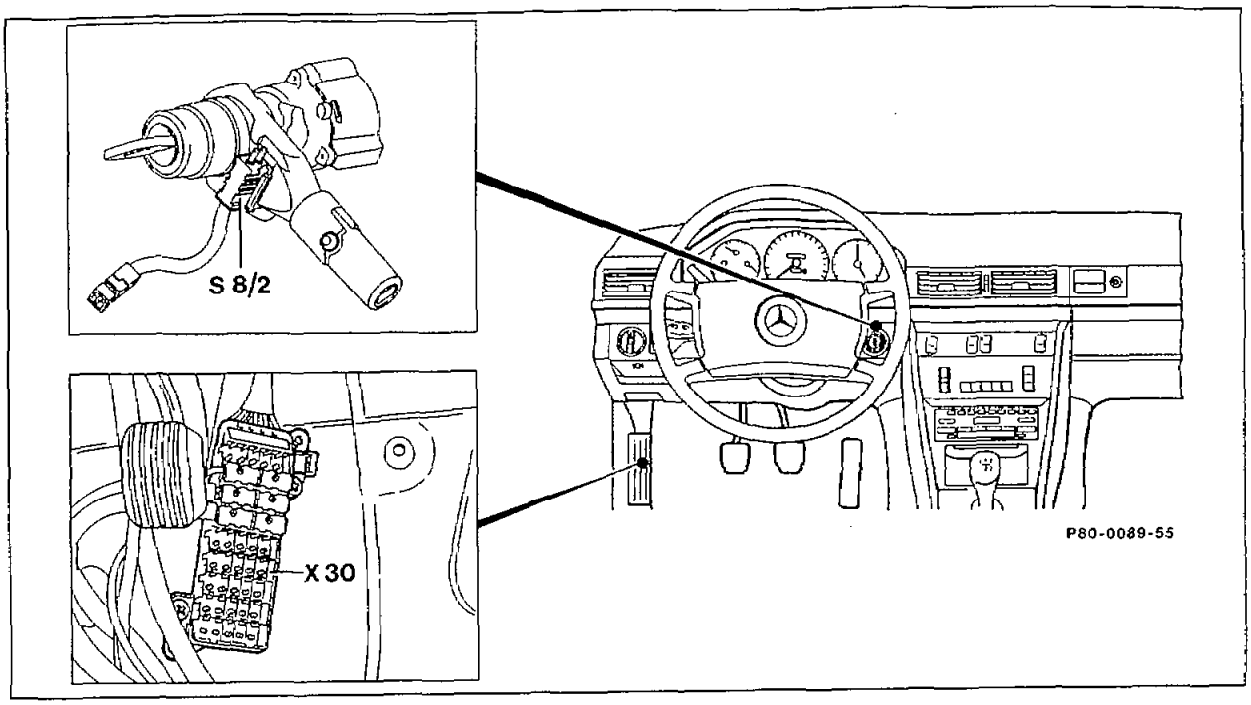

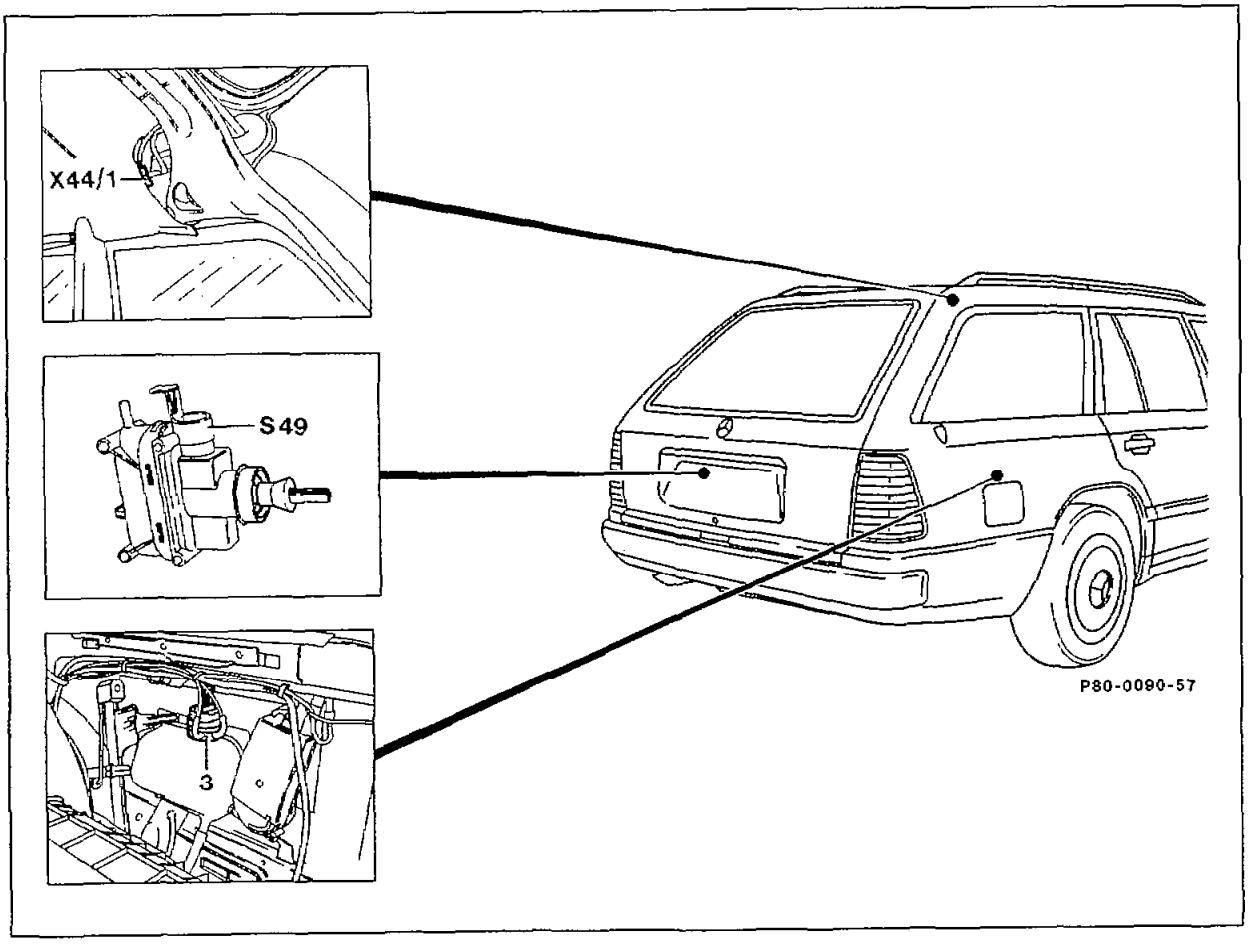

3	Fuel filler flap actuator	X30	Connector plug for optional electrical equipment
S8/2	Lighting/central locking system warning buzzer contact	X44/1	Connector, central locking system/trunk lock
S49	Tailgate actuator		

The central locking system with multipoint operation is based on the central locking system with single door operation. The car can be locked or be unlocked centrally from the driver's and front passenger's door and from the trunk lid or tailgate by operating the key or the locking pin. The central locking system includes all the doors, the trunk lid or tailgate and the fuel filler flap.

B. Operation

1. Version except (D) as of 03/94 and vehicles with code 885

Driver's door
The central locking system can be operated at any time when the driver's door is closed. From the outside with the key (turn to the right as far as stop to lock, turn to the left as far as a stop to unlock), from the inside by pressing down the locking pin or pulling the handle in the door trim.

Front passenger's door
The central locking system can be operated from the closed or opened front-passenger's door with the key or with the locking pin or handle (as the driver's door). The car can only be locked centrally, if the ignition key has been withdrawn or, after being withdrawn, has been re-inserted but not operated (key in position 0 in steering lock). This prevents the user inadvertently being locked out by operating the system from the front passenger's door with the key in position 1 and 2 or from the tailgate of Station Wagon.

Trunk lid (Sedan only)
The central locking system can be operated with the key when the trunk lid is opened or closed.

To unlock:
Turn key to the left as far as a stop and withdraw in vertical position.

To lock:
Turn key to right as far as the stop and withdraw in vertical position.

Additional lock:
Turn key to right as far as a stop and withdraw in horizontal position. The trunk lid now remains locked even when the doors are unlocked centrally.

Tailgate (Station Wagon only)
To unlock:
Turn key to the left as far as a stop and withdraw in vertical position.

To lock:
Turn key to the right as far as a stop and withdraw in vertical position. Car is locked and tailgate is additionally secured. When the central locking system is unlocked from one of the front doors, the tailgate remains locked. The additional interlock of the tailgate can only be cancelled at the tailgate by turning the key to the left as far as a stop or by opening the tailgate with the handle. On cars in (AUS) and (USA) version the locking pin must be withdrawn in place of opening with the handle.

The locking pin in the tailgate indicates whether the car is locked or unlocked.

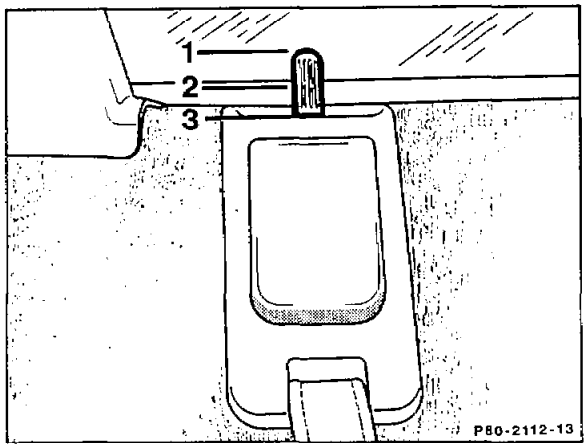

Position 1 = Car unlocked
Position 2 = Car locked from front door
Position 3 = Car locked from tailgate
(tailgate is additionally secured)

Note
If the trunk lid or tailgate of a centrally locked car is unlocked, all the doors and the fuel filler flap are also unlocked. After closing the trunk lid or tailgate, the car must again be locked centrally.

Manual release of fuel filler flap
If the central locking system fails, the fuel filler flap can be unlocked manually by operating a red manual release button on the fuel filler flap actuator.

2. Version for (D) only as of 03/94 and vehicles with code 885

The central locking system, anti-theft warning system and convenience feature can now only be controlled with the infrared remote control for the central locking system (IFZ).

C. Function

1. Version except (D) as of 03/94 and vehicles with code 885

Sequence of functions as illustrated by unlocking car at driver's door

When the key is turned to the left in the lock cylinder, the electric switch in the actuator is switched over by means of a linkage. This switch then passes a positive voltage along its control lead to the supply pump.

The supply pump operates and generates an overpressure which passes along a system of lines to all the pneumatic actuators.

The diaphragms in the actuators are pushed up, operate the locks via a linkage and unlock them. The fuel filler flap actuator unlocks the flap directly. At the same time, the electric switches of the actuator in the front passenger's door and in the trunk lid are also switched over by the pneumatic element of the actuator and like the mechanically operated switch in the driver's door actuator, also supply a positive voltage to the supply pump.

Once a pressure of approx. 450 mbar has been reached in the system, a pressure switch switches off the supply pump.

Air is again released from the pneumatic line system and from the actuator through the supply pump – the system is pressureless and the unlocking operation is completed.

The locking operation proceeds in a similar manner to the unlocking operation. However, the supply pump is actuated by a negative control voltage, the direction of rotation of the pump motor is reversed, thus producing the vacuum required for locking.

Function diagram

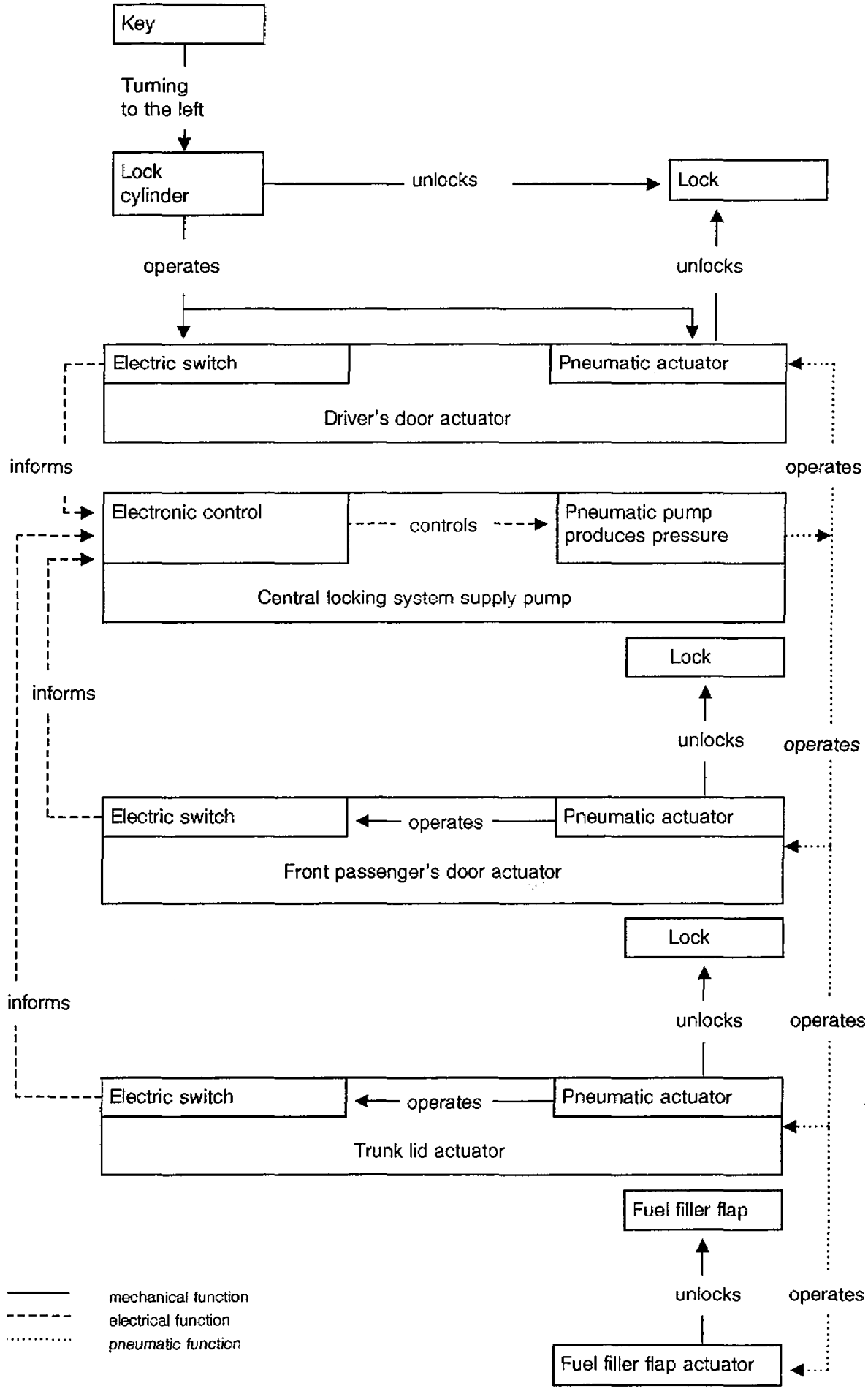

2. Version for (D) only as of 03/94 and vehicles with code 885

As of 03/94 the infrared remote control for the central locking system (IFZ) is a standard feature. The central locking system pump as well as the control unit for the infrared remote control are the same as for model series 202 in terms of the design and function. Since the central locking system actuators are no longer connected electrically, the central locking system, anti-theft warning system and convenience feature can no longer be actuated with the mechanical key. On vehicles with anti-theft warning system an alarm is tripped on vehicles locked with the infrared remote control when they are unlocked with the mechanical key. Moreover, the standard immobilizer can only be activated and deactivated with the infrared remote control for the central locking system.

D. Components

Supply pump (M14/1)
1st version, Sedan up to approx. 04/86, Station Wagon up to approx. 09/88.
The supply pump for multipoint operation has two electrical connections. In view of the modified electronic switching function, this supply pump cannot be interchanged with the supply pump used hitherto (single-door operation).

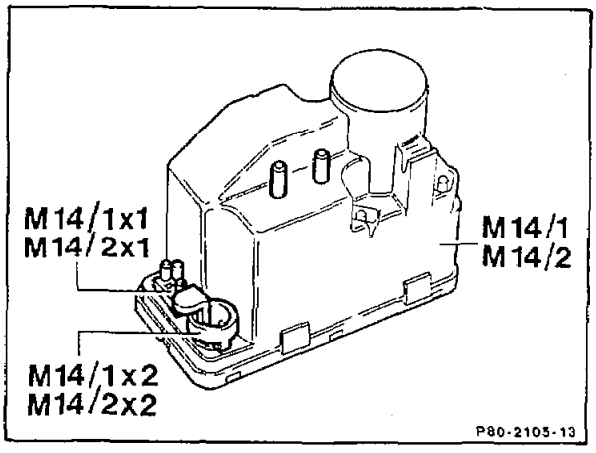

The supply pump is connected to positive (terminal 30) and the ground (terminal 31) through the 2-pin connection (M14/1x1, 3-pin on cars with orthopedic driver's backrest M14/2x1).

The actuators pass a negative control voltage during locking and a positive control voltage during unlocking through the connector (M14/1x2) to the supply pump.
The supply pump produces pressure for unlocking and vacuum for locking (approx. 500 mbar). If there is a severe leakage, the supply pump switches off after 25 – 150 s (safety switching time). The electronic control features several logic functions which avoid incorrect switching operations and faults.

2nd version from approx. 05/86 to approx. 09/88 (not for Station Wagon).
The control of the supply pump is equipped with a "full customer IC". This IC features not only the same functions as hitherto but also a fault current detection which prevents creep currents resulting in the system operating unintentionally. Instead, the control inputs affected are deactivated. The supply pump is recognizable from the light-coloured cover (arrow), hitherto black.

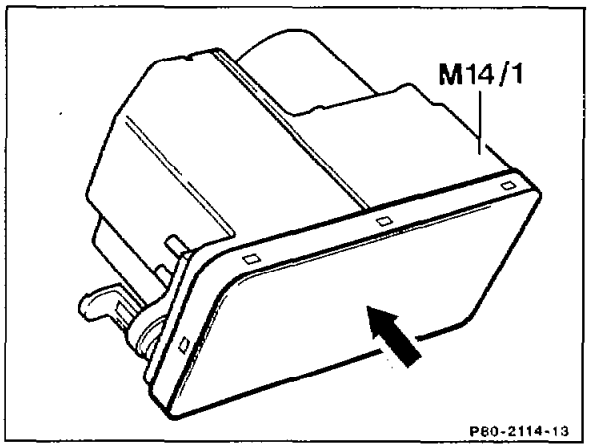

At the same time, the electrical wiring harness has been modified. The ground cable of the actuator for the trunk lid lock (S49) is now connected directly to the main ground point (refer to wiring diagrams 80-800); hitherto to the lighting/central locking system warning buzzer contact (S8/2).
Production breakpoint as from
Vehicle Ident End No.:
A 245572.
The modified supply pump may not be fitted to cars with a lower Vehicle Ident End No. The previous version remains valid for such cars.

3rd version as from 10/88
To enhance the comfort features, the supply pump of the central locking system is replaced by an enhanced-performance version. It can be interchanged with the previous version. The distinguishing feature of pump with black cover for Model 124 Station Wagon and pump with light- coloured cover for all other models remains unchanged.
Production breakpoint as from
Vehicle Ident End No.:
A 875395
F 092086

4th version with infrared remote control as of approx. 09/92.
This supply pump has an additional electrical plug connection (M14/1x3, M14/2x3) for the control by the infrared remote control unit.

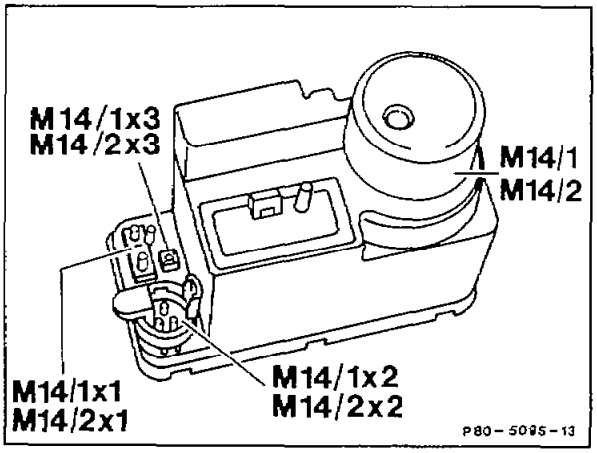

5. Version for (D) only as of 03/94 and vehicles with code 885

With introduction of the immobilizer the pneumatic control unit (PSE) is installed in combination with the control unit for the infrared remote control used on model series 202. See diagnosis manual for diagnosis on pneumatic control unit (PSE) and infrared remote control.

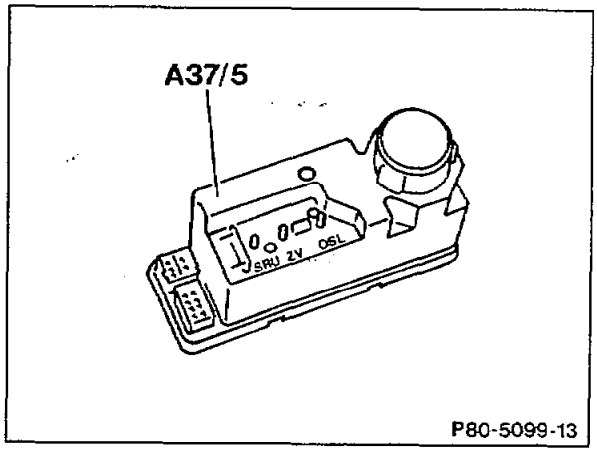

Technical data of supply pump

		from approx. 10.88	up to approx. 09/88
Pressure cutoff point	(mbar)	approx. 650	approx. 500
Switching time	(s)	approx. 1	approx. 3
Safety switching time	(s)	25 – 30	25 – 150
Power consumption	(A)	max. 7.5	max. 3.5
Air admission/release time	(s)	approx. 10	approx. 10

Actuator (S47, S48, S49)

A combined actuator is fitted to both front doors and the trunk lid or tailgate. This actuator has an electrical and a pneumatic connection (arrows)..

1st version up to approx. 08/90

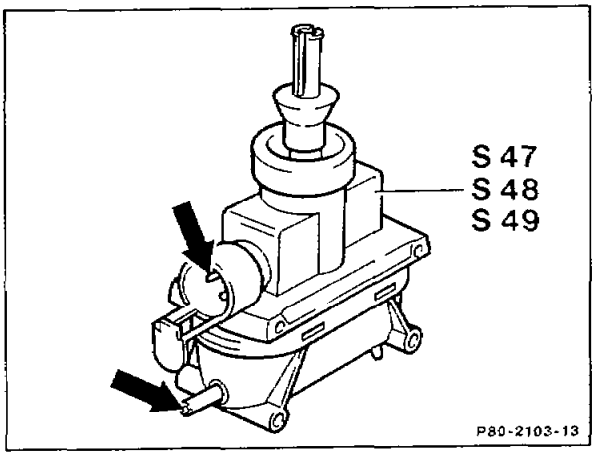

2nd version as of approx. 09/90

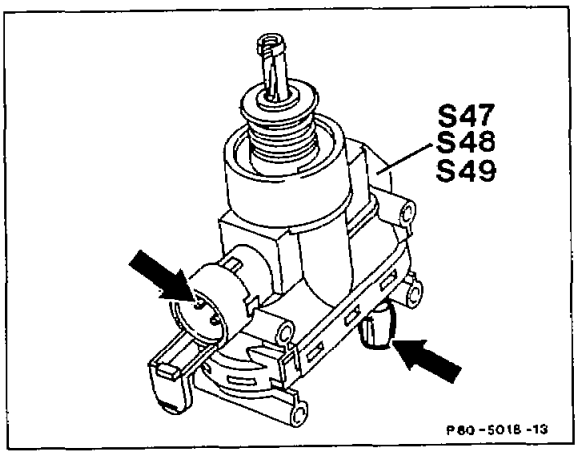

The actuators of the front doors and tailgate differ externally from the trunk lid actuator in having different colour coding (refer to table on p. 11). When performing repairs, the actuator must not be confused as a harder cup seal is used on the trunk lid actuator for locating the top and bottom end stop.

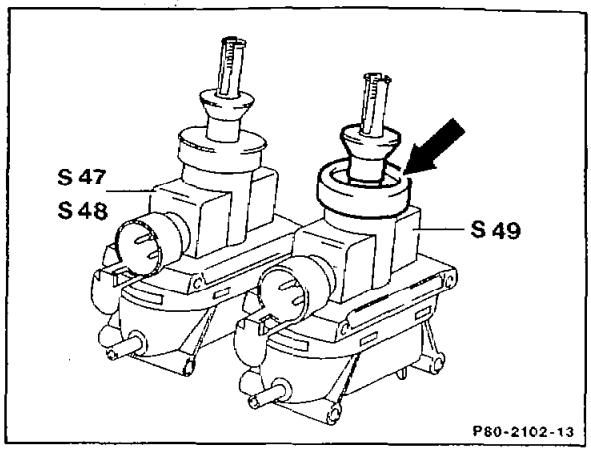

S47 Front left door actuator
S48 Front right door actuator
S49 Trunk lid actuator (tailgate)

Trunk lid lock actuator S49 (coupé and cabriolet)

The electrical pneumatic operation corresponds to the actuator used in the Sedan. The cup seal on the actuating rod is eliminated.

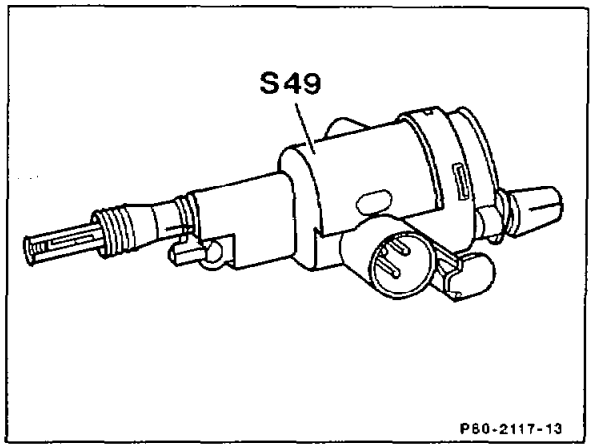

The actuator is clipped to the cover (a) (screwed on for Sedan).

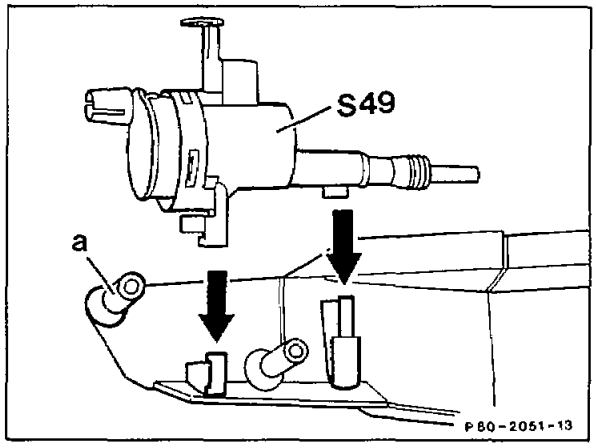

Note

As of 03/94 the actuators are no longer connected electrically on vehicles for (D) and vehicles with code 885 and therefore operate as purely pneumatic elements.

Distinguishing features of actuator (S47, S48, S49)

	Colour			Installation point		
Manufacturer	Housing	Sliding sleeve	Cup seal	Driver's door Tailgate	Trunk lid Sedan	Trunk lid Coupé, Cabriolet
Bosch	black	black	black	•		
	black	yellow	black		•	
Hella	black	black	black	•		
	black	black	red		•	
	white	black	black	•		
	white	black	red		•	
Woco	black	black	black	•		
	black	black	white or red		•	
Woco [1]	black	black	black		•	•
Alfmeier	black	black	–			•

[1] Red shift rod mounting, for vehicles with trunk lid auxiliary locking device only

The electrical and pneumatic operation of all the actuator is identical. Positive and ground are supplied constantly to the electrical switch in the top part of the actuator. The two-way switch passes a positive control voltage for unlocking and a negative control for locking to the supply pump.

The bottom chamber of the element is pressurized for unlocking and a vacuum created for locking.

The electrical and pneumatic parts of the actuator can be separated by a sliding sleeve with detent to enable the lock to also be operated when the actuator is still pressurized or when a vacuum exists.

Sliding sleeve lock (phased in from approx. 12/86)

An integrated support (arrow) prevents the position of the sliding sleeve (a) from being altered. When the connecting rod to the lock is inserted, this overrides the support.

As a result, the element is in the installation position. Positioning faults at the door actuator are then no longer possible.

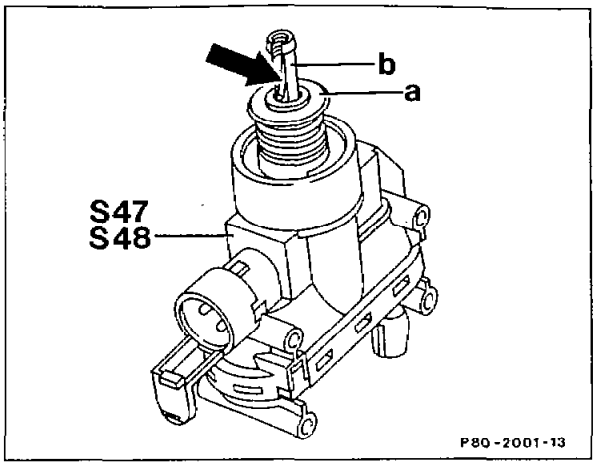

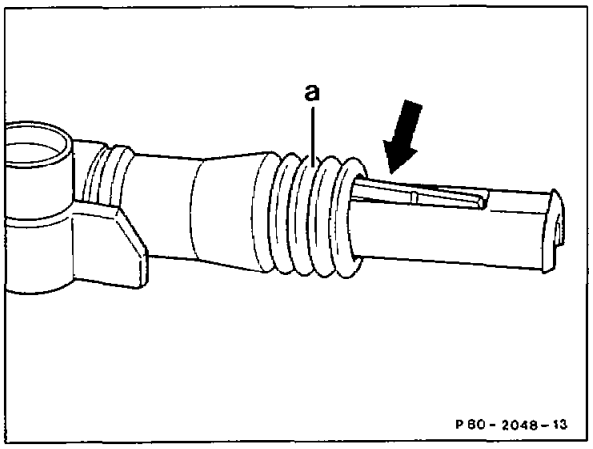

Rear door actuator

The rear door actuator is fitted with a pneumatic connection. The bottom chamber of the actuator is pressurized for unlocking and a vacuum created for locking. The pneumatic line is fixed in place by a clip (arrow) on the underside of the housing.

1st version up to approx. 08/90

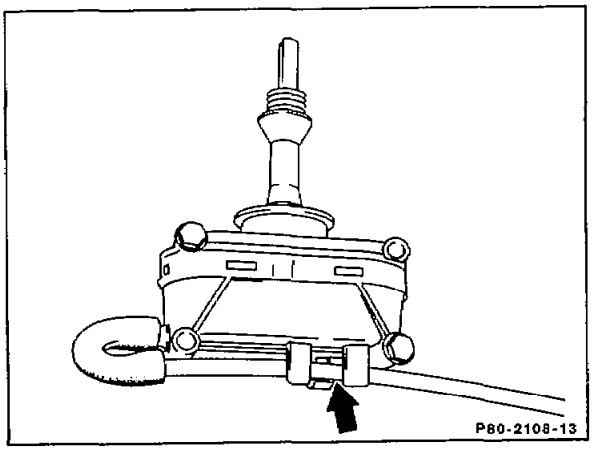

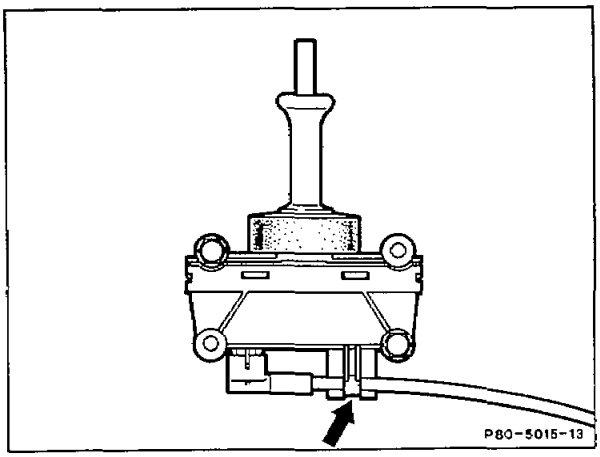

2nd version as of approx. 09/90

Fuel filler flap actuator

1st version up to approx. 03/85

The designed operation of this actuator corresponds to the rear door actuator, although it fitted with a harder cup seal for positioning the top and bottom end stop.The sliding sleeve can be distinguished by its yellow colour.

2nd version from approx. 04/85 to approx. 03/87 (Sedan only)

Actuator as 1st version but with anti-theft lock (a) and linkage guide (arrow). The anti-theft lock prevents the actuator being unlocked manually via the full filler flap.

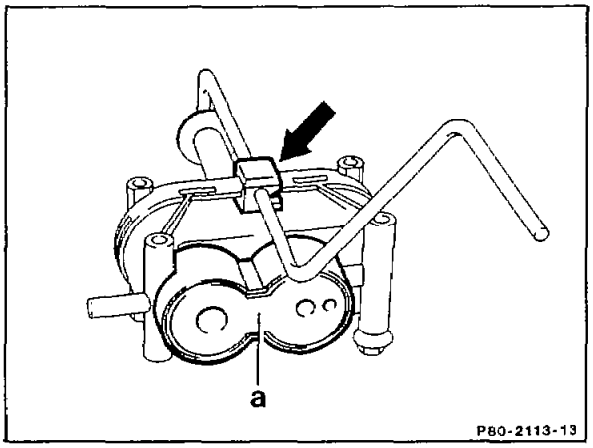

3rd version

Model 124 Sedan from approx. 04/87, A 490369

Model 124 Station Wagon and Coupé from start of production.

Clip-fit element with direct locking linkage, anti-theft lock and manual release button.

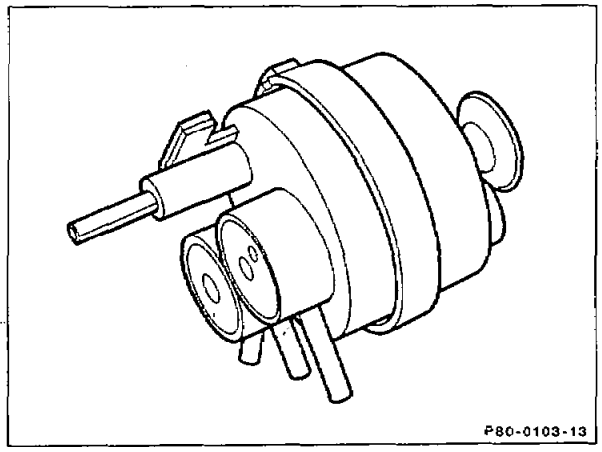

4th version as of approx. 09/90
Clip-fit pneumatic actuator with direct locking linkage, anti-theft device and emergency unlocking button.
A valve in the actuator prevents the locking linkage from being pushed back manually via the fuel filler flap. The guide bush (6) covers the locking linkage and prevents water coming into contact with the linkage which can result in the actuator icing up in winter.

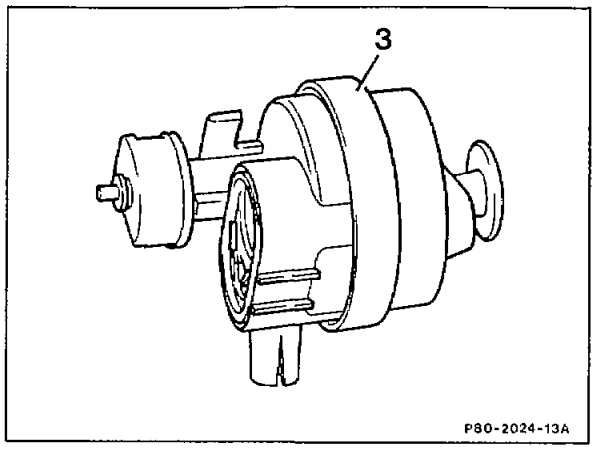

Warning buzzer contact, exterior lamps/central locking system (S8/2), (except vehicles for (D) as of 03/94 and vehicles with code 885)
This switch on the steering lock interrupts the ground cable to the actuator in the right front door (left door on RHD) if the ignition key is in position 1 or 2 in the steering lock. In addition the ground supply to the trunk lid actuator is also interrupted on Model 124 Sedan from approx. 05/85 to approx. 04/86 and on Model 124 Station Wagon from start of production.

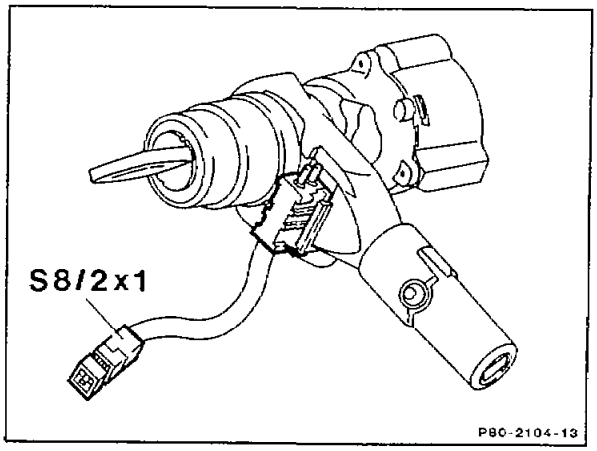

Wiring harness with replaceable connectors (coupé and cabriolet)

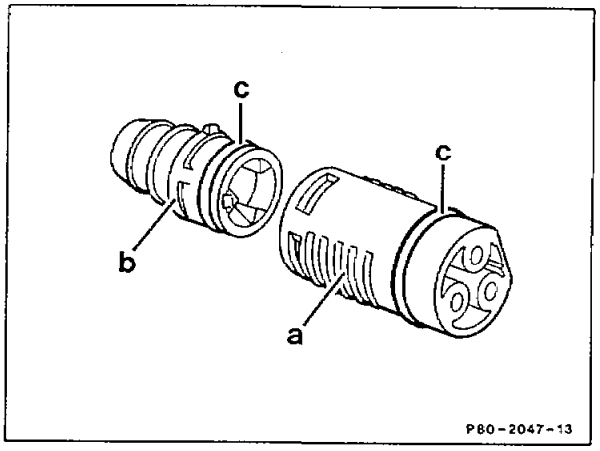

a Front part of connector
b Rear part of connector
c O-ring

Interior central locking system switch (S85) ((D) only as of 03/94 and vehicles with code 885)

Vehicles unlocked with the infrared remote control can be locked and unlocked centrally with a switch in the center console.

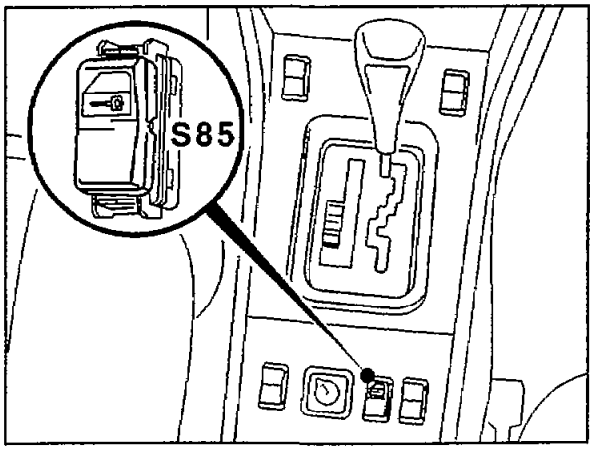

P80-5233-13

Pneumatic lines with quick-fit connections

In September 1988 pneumatic lines were, and will be as of approx. 09/90, fitted with quick-fit connections which run directly from a 6-point distributor at the supply pump to the pneumatic actuators. The distributors in the front left and front right footwell are therefore not fitted.

Cars affected

Model	Vehicle Ident End No. from	to
124	1A 861403 1F 097724 and across the range as of approx. 09/90	1A 866954 1F 098305

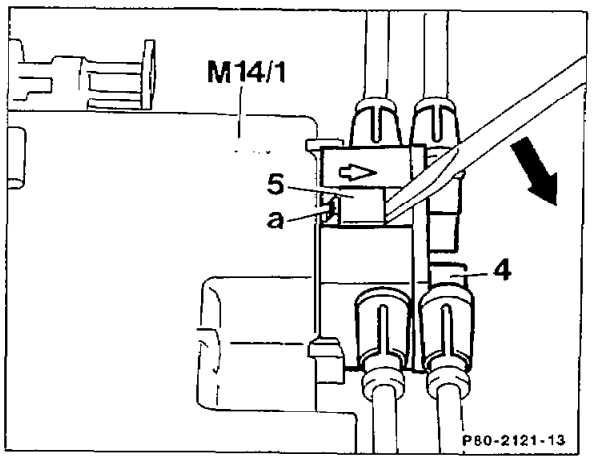

4 6-point distributor
5 Locking device
M14/1 Central system locking supply pump
a Pull-off lock

All pneumatic lines are fitted with a plug at their end which engages in the pneumatic connecting bush of the actuator.

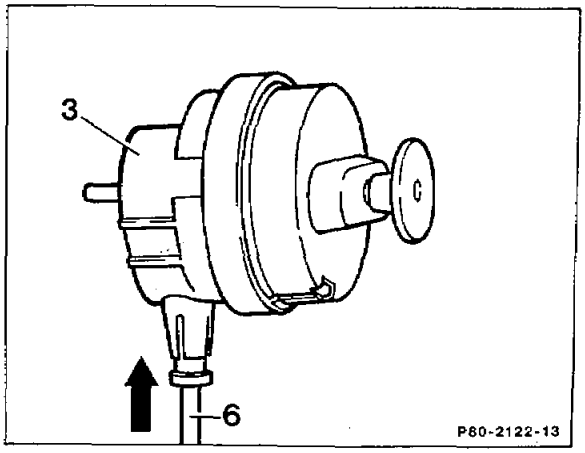

3 Fuel filler flap actuator
6 Pneumatic line

The ends of the pneumatic lines are marked. The markings indicate to which pneumatic actuator the line belongs.

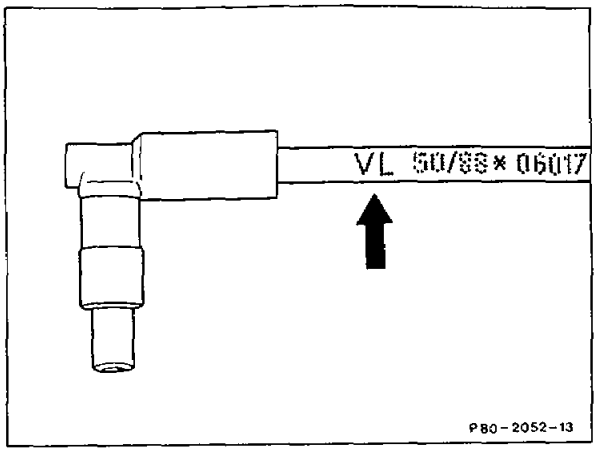

Marking	Actuator
VL	Left front door actuator
VR	Right front door actuator
HL	Left rear door actuator
HR	Right rear door actuator
HD	Trunk lid lock actuator
KE	Fuel filler flap actuator

Operation no. of operation texts and work units
or standard texts and flat rates 80-0020

1st version except (D) as of 03/94 and vehicles with code 885

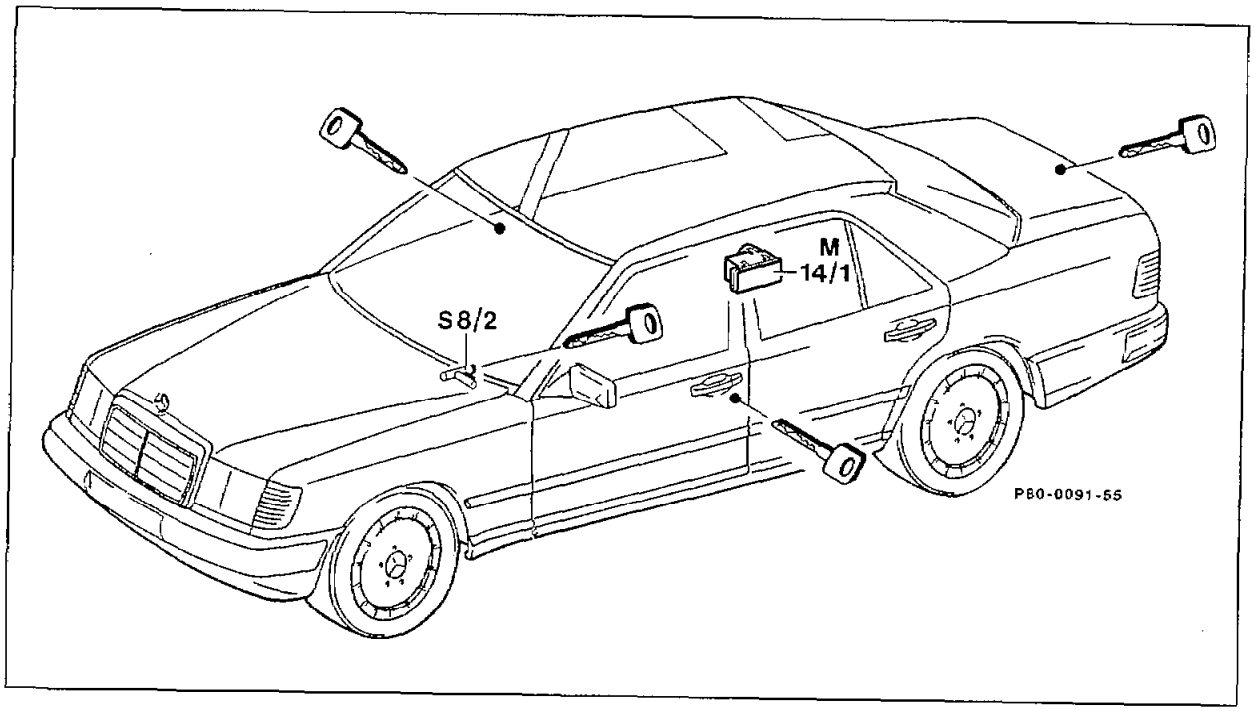

Unlock and lock left, right front door and trunk lid or tailgate.
Listen for correct operation of supply pump.
All doors, trunk lid or tailgate and fuel filler flap must lock or unlock in ≤3 s.

If actuators do not lock or unlock and supply pump (M14/1) does not operate:	If actuators do not lock or unlock although supply pump (M14/1) operates:
80–104 Check electrical function of central locking system.	80–108 Check pneumatic function of supply pump.
80–112 Check electrical function of actuator.	80–120 Check central locking system for leaks.
	80–116 Check pneumatic function of actuator.

Following repairs, additionally check!

Setting of actuator . . . . . Lock left and right front doors with key and keep a watch on locking buttons on the other doors. After locking button has moved 6 – 8.5 mm, the central locking system must lock the car. Remove and install actuator if necessary, set (80–215).

Lock on right front door to prevent inadvertent *locking out* . . . . . *Move key in steering lock position 1 or 2 and* press locking button on right (left for RHD) front door through the opened window. Central locking system must now not lock car. Renew lighting/central locking system warning buzzer contact (S8/2), if necessary (46–640).

Note

As of the introduction of new features in 09/89 up to approx. the middle of 09/89, the anti lock-out device is rendered inoperative on models 124 sedan and coupé with tilting/sliding roof and/or electric power windows.

⚠

Note microfilm "Up-to-date trouble diagnosis" or "Trouble diagnosis".

Note

After completing the repair work and prior to function test, disconnect ground cable to the battery for approx. 10 s to neutralize fault-current detection of the supply pump.

2nd version for (D) only as of 03/94 and vehicles with code 885

See diagnosis manual

Preceding operation:
Checking function of central locking system (80-090)

Operation no. of operation texts and work units
or standard texts and flat rates 80-0025

1st version except (D) as of 03/94 and vehicles with code 885

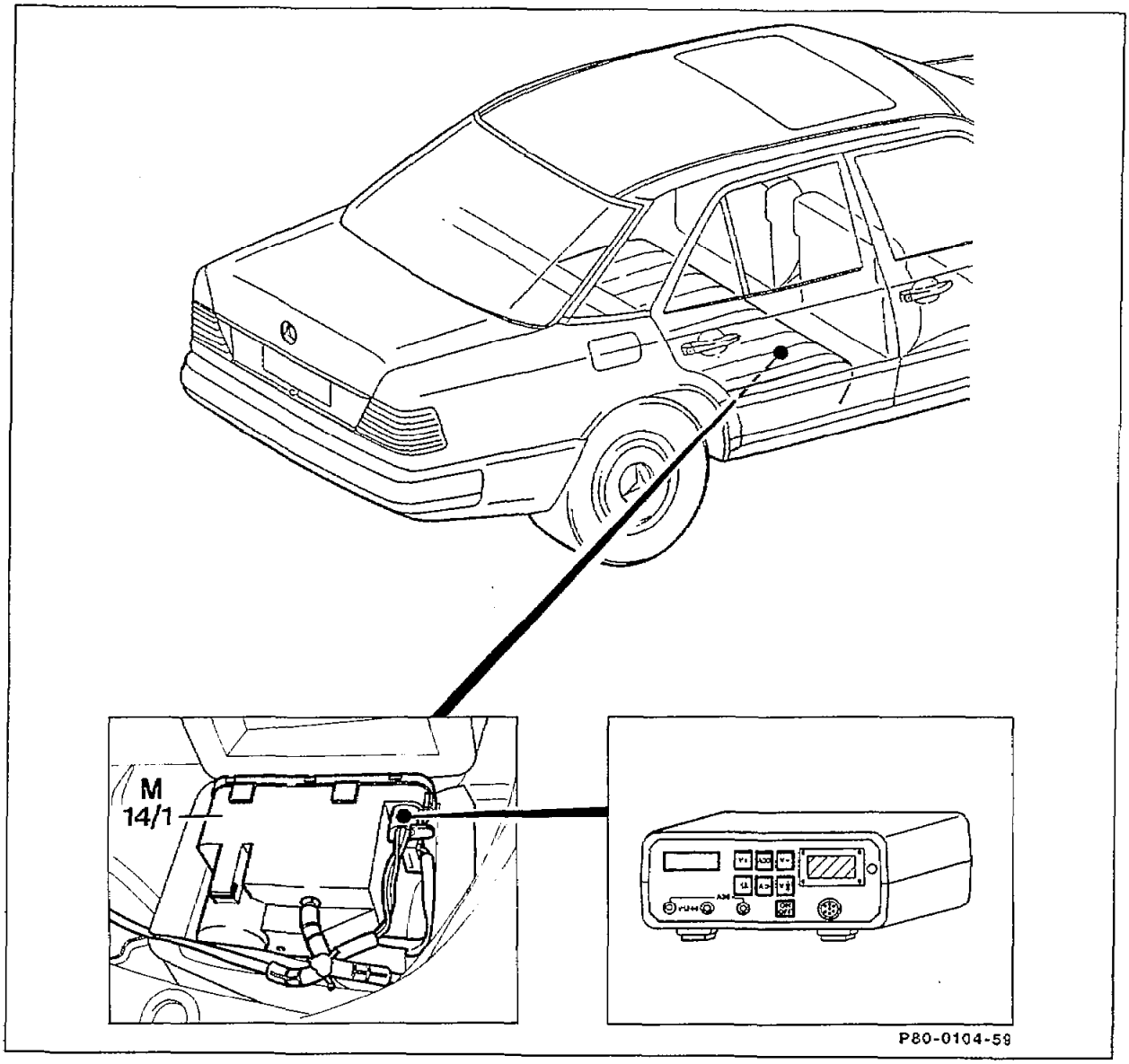

Prepare tests	Steps 1 – 6
Check power supply of supply pump	Battery voltage (>10 V)

Check control voltage when car unlocked	Battery voltage (> 10 V).
Check control voltage when car locked	Battery voltage (> 10 V).
Check contacts of connectors at supply pump	according to findings: rectify contact fault or replace supply pump.

Commercial tester

Digital multimeter	e. g. Sun, DMM-5

⚠

On cars fitted with **anti-theft alarm**, detach intermediate plug of anti-theft harness at connector (M14/1x2) or (M14/2x2) and connect central locking system harness direct to supply pump. Following this, once again check operation of central locking system. If system now operates, check anti-theft alarm.

Preparing test

1 Expose supply pump (M14/1) and remove from protective foam cap (80–270).

2 Check fuse for central locking system, refer to label in fuse cover.

3 Withdraw key from steering lock.

4 Close both front doors.

5 Detach connector (M14/1x1) of electric wiring harness at supply pump (M14/1).

6 Open connector housing and re-connect bushes without housing (brown lead = ground).

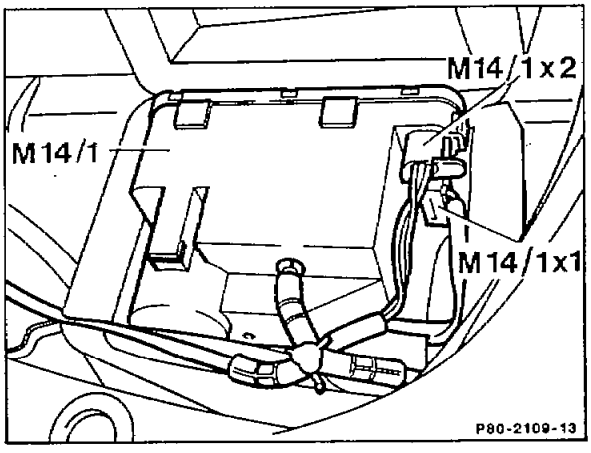

Test power supply of supply pump.

Connect digital multimeter as shown in illustration. Lock and unlock central locking system with key. Re-fit connector housing.

Specification: Battery voltage >10 V

yes	no

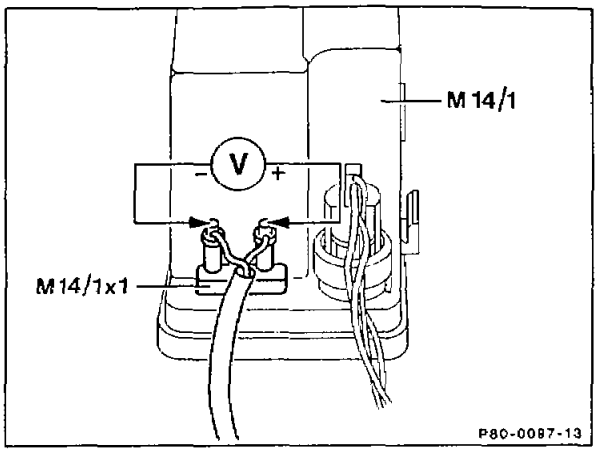

Test power supply according to wiring *diagram (80–800)*.

Test control voltage with car unlocked.

Unlock central locking system at all 3 locking points with the key.
Connect digital multimeter to the two connectors of wiring harness as shown in ill. in turn in positions A, B and C (flat face of round connector downwards).

Specification in positions A, B and C: Battery voltage >10 V.

yes	no

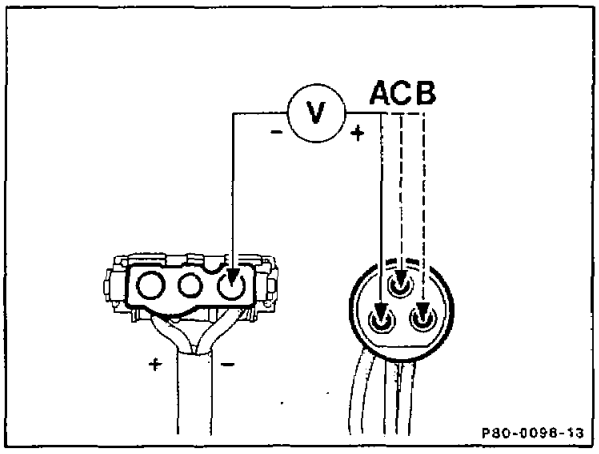

No battery voltage in position:
A Test right front door actuator (left for RHD) (80-112).
B Test left front door actuator (right for RHD) (80-112).
C Test trunk lid or tailgate actuator (80-112).
On Station Wagon, check contacts of connector of central locking system/trunk lock (X44/1) prior to test (refer to ill.).

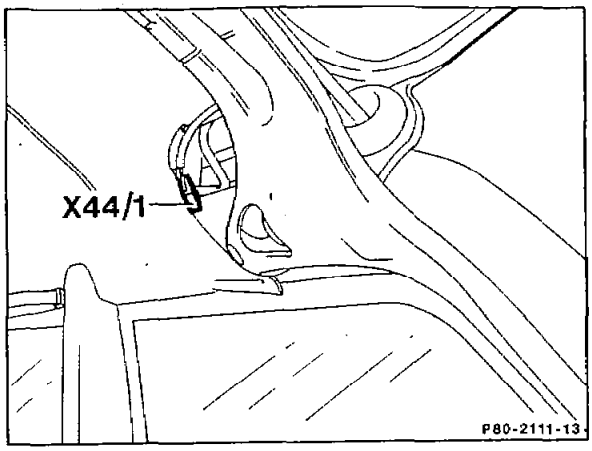

Test control voltage with car locked.

Lock central locking system at all 3 locking points with the key.
Connect digital multimeter to the two connectors of wiring harness as shown in ill. in turn in positions A, B and C (flat surface of round connectors downwards).

Specification in positions A, B and C:
Battery voltage > 10 V

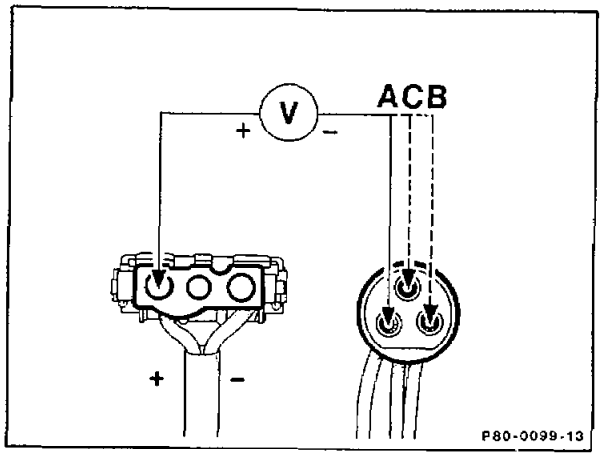

yes	no

No battery voltage in position:
A Test right front door actuator (left for RHD) (80–112).
B Test left front door actuator (right for RHD) (80–112).
C Test trunk lid or tailgate actuator (80–112).
On Station Wagon, check contacts of connector of central locking system/rear trunk lock (X44/1) prior to test (refer to ill.).

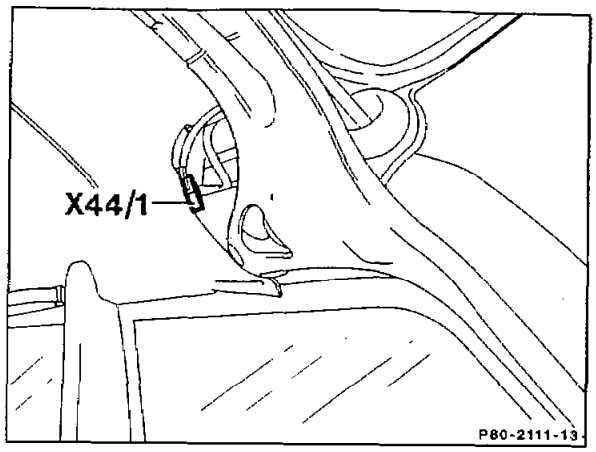

Check contacts of connectors at supply pump.

in order	not in order

Rectify contact fault.

Replace supply pump.
Note
Supply pumps with white and black cover are not interchangeable (refer to 80–010, Section D)

End of test

2nd version for (D) only as of 03/94 and vehicles with code 885

See diagnosis manual

80-108 Checking pneumatic function of supply pump

Preceding operation:
Checking function of central locking system (80-090)

Operation no. of operation texts and work units
or standard texts and flat rates 80-0030

1st version except (D) as of 03/94 and vehicles with code 885

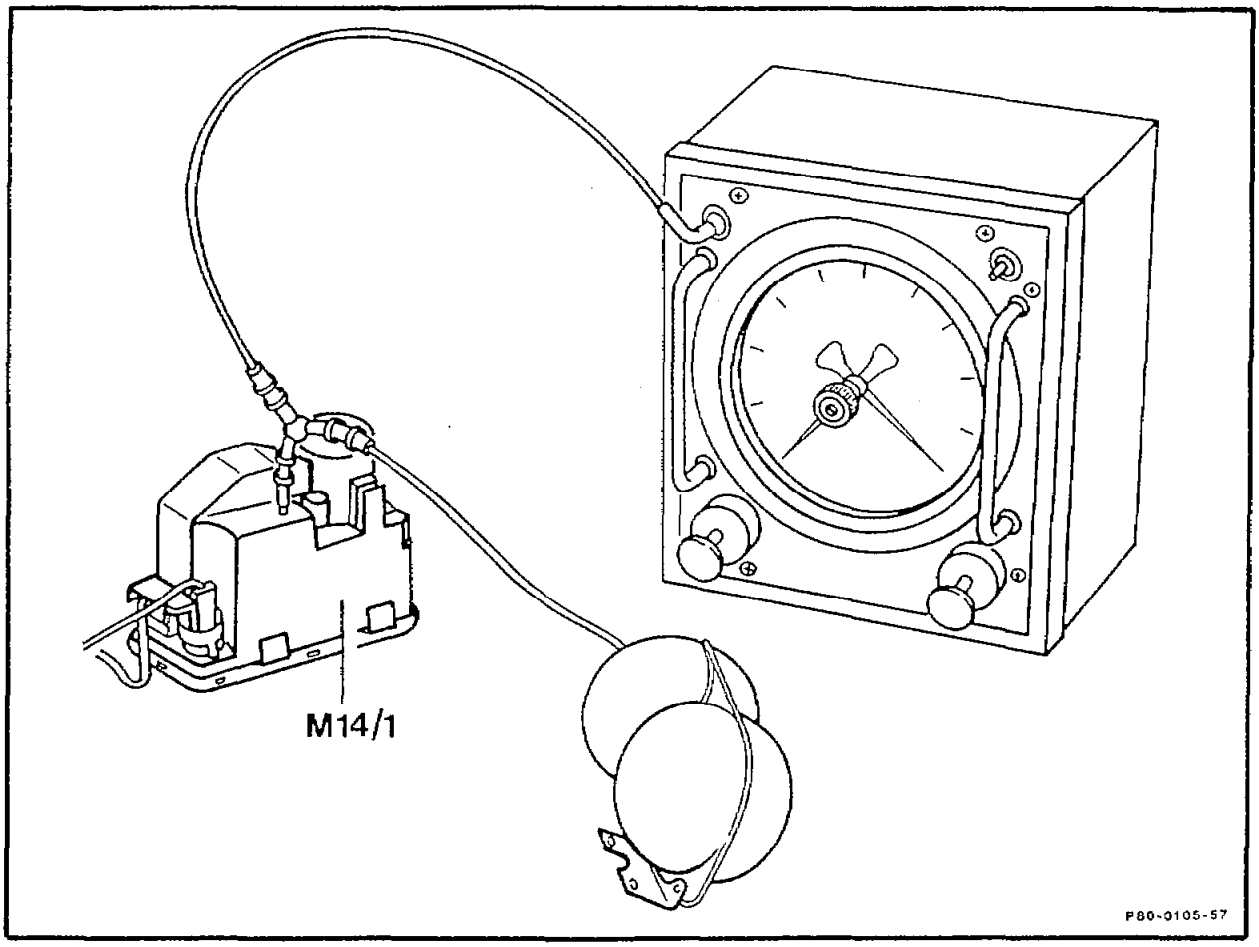

Prepare test	Steps 1 – 3
Check vacuum of supply pump when locking	>420 mbar in ≤3 s
Check pressure of supply pump when unlocking	>420 mbar in ≤3 s
Check safety switching time when disconnecting supply pump from line system	approx. 25 – 150 s

Special tool

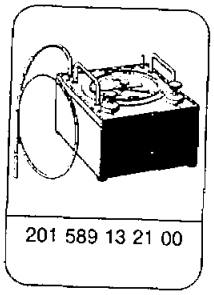

Parts for test

Container	107 800 08 19
Multiple connector	117 078 01 45
Sealing cap	000 987 11 45

Preparing test

1 Connect container with multiple connector to tester 201 589 13 21 00 at the vacuum end *(black connection)*.

2 Remove supply pump and detach pneumatic line (80–270).

3 Connect tester 201 589 13 21 00 with container to supply pump (M14/1).

Note

If supply pump fitted with pneumatic connection for orthopedic backrest, seal latter with cap Part No. 000 987 11 45.

Test

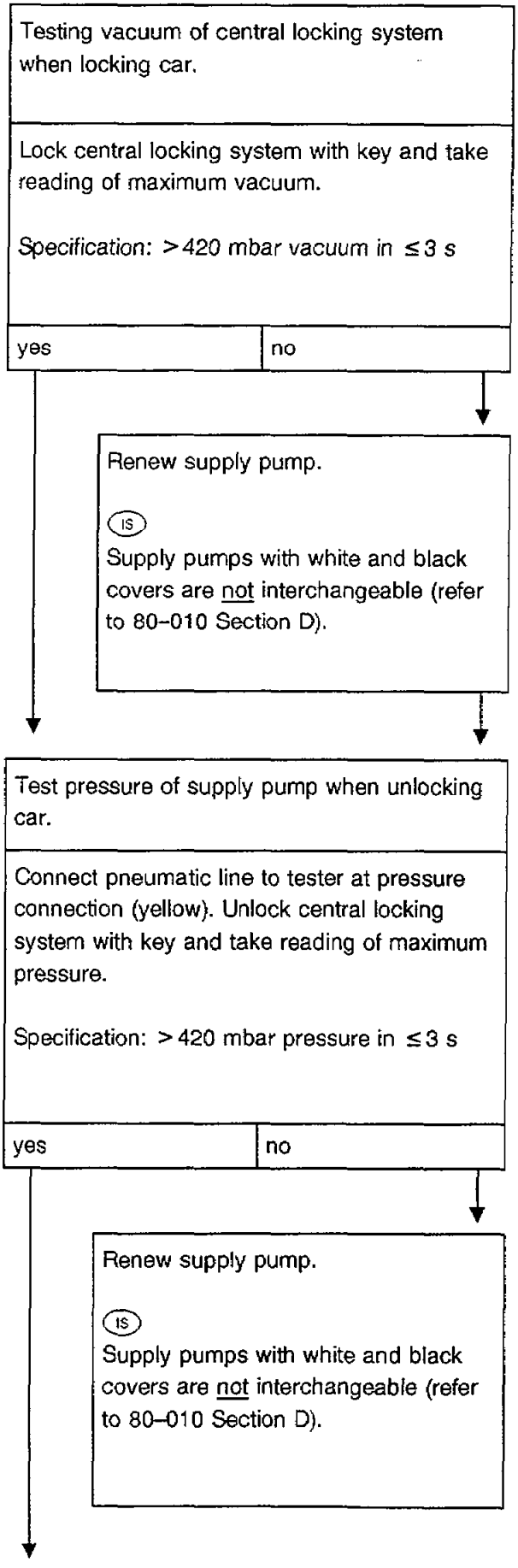
Testing vacuum of central locking system when locking car.
Lock central locking system with key and take reading of maximum vacuum.
Specification: >420 mbar vacuum in ≤3 s
yes
no
Renew supply pump.
IS
Supply pumps with white and black covers are not interchangeable (refer to 80-010 Section D).
Test pressure of supply pump when unlocking car.
Connect pneumatic line to tester at pressure connection (yellow). Unlock central locking system with key and take reading of maximum pressure.
Specification: >420 mbar pressure in ≤3 s
yes
no
Renew supply pump.
IS
Supply pumps with white and black covers are not interchangeable (refer to 80-010 Section D).

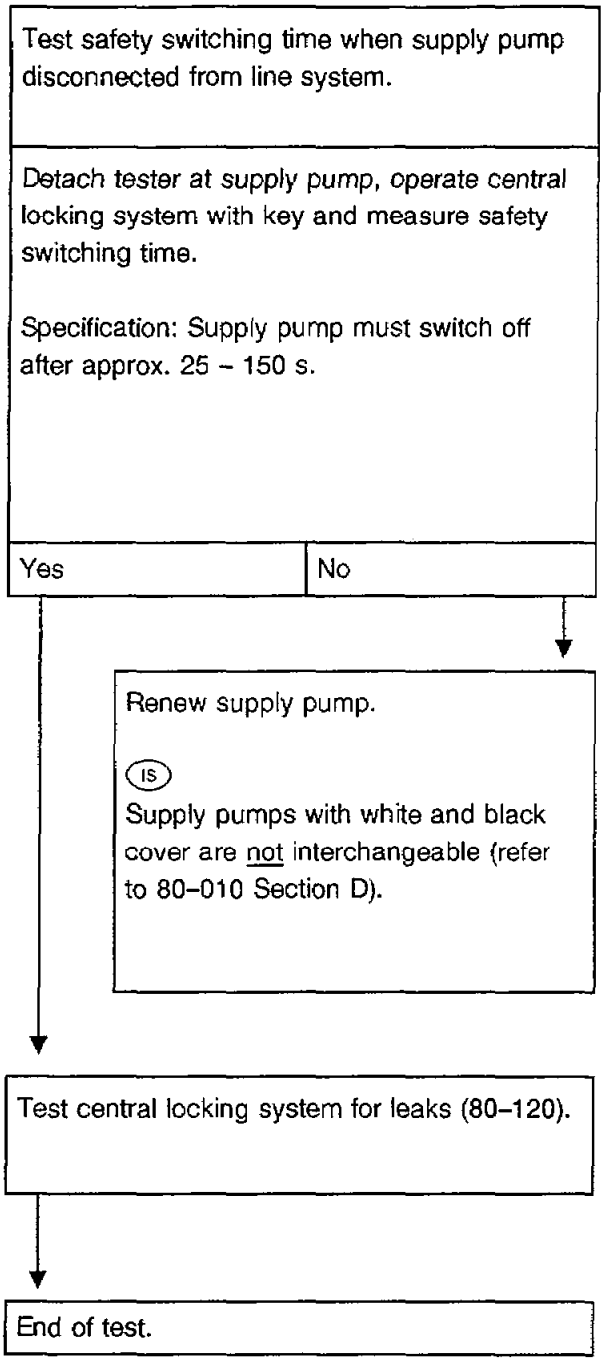

2nd version for (D) only as of 03/94 and vehicles with code 885

See diagnosis manual

80-112 Checking electrical function of actuator (except vehicles for (D) as of 03/94 and vehicles with code 885)

Preceding operation: checking electrical function of central locking system (80-104)

Operation no. of operation texts and work units or standard texts and flat rates ..... 80-0300 to 0306

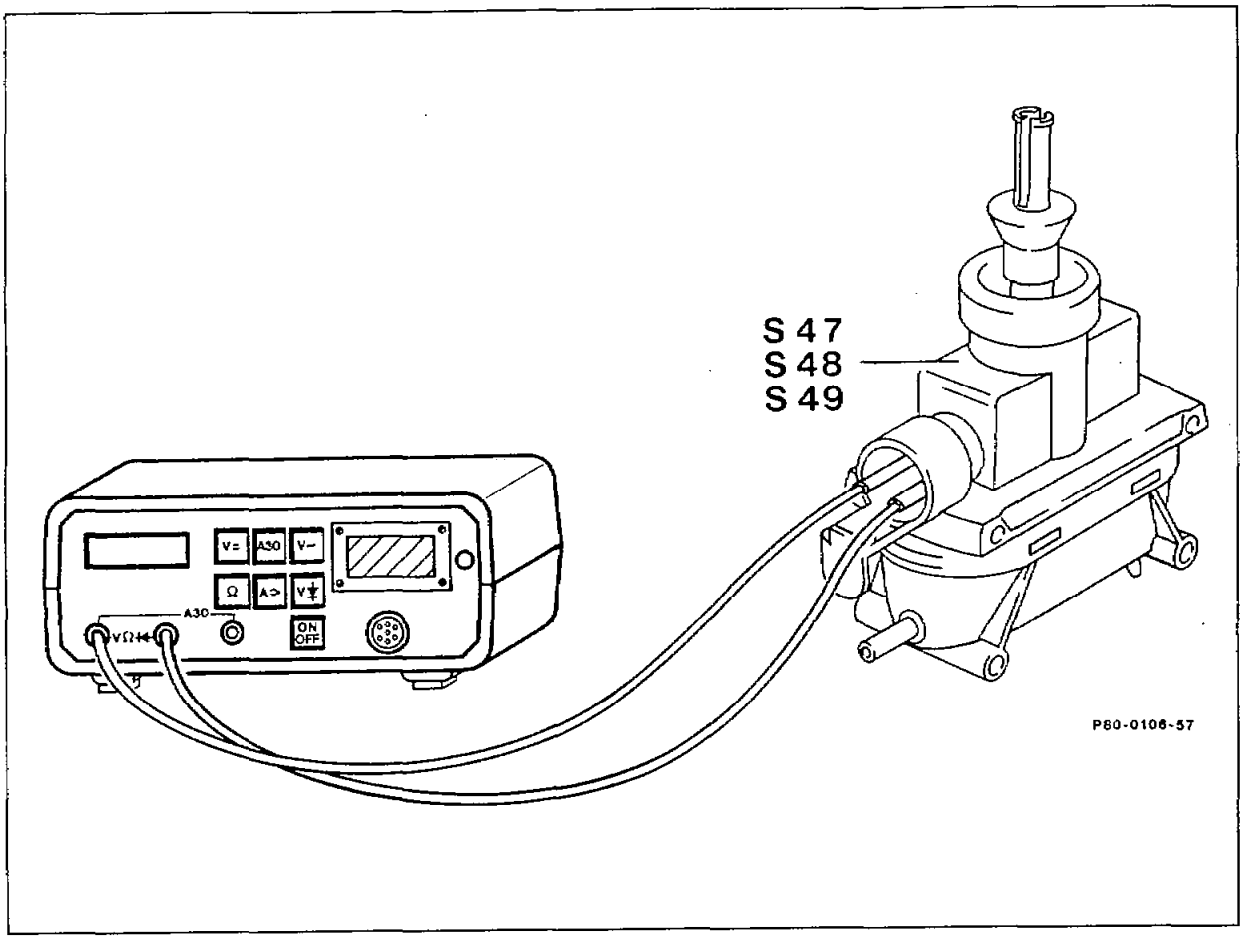

Prepare test	Steps 1 – 3
Closing function of actuator	check
Opening function of actuator	check
Power supply of actuator	check

Commercial tester

Digital multimeter	e. g. Sun, DMM-5

Preparing test

1 Remove actuator (80-215).

2 Detach electrical harness and pneumatic line.

3 Push sliding sleeve (a) over shift rod mounting (b); it may be necessary to push sliding sleeve lock (arrow) to perform the step.

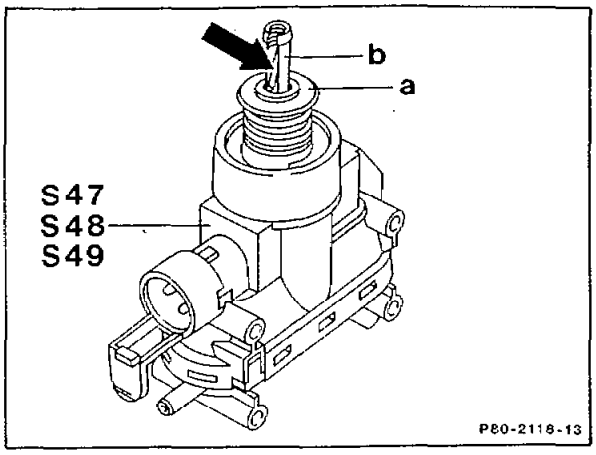

Test

Testing closing function of actuator.

Connect digital multimeter to element as shown in ill. for testing resistance.
Specification in position 1 ≤ 1 Ω
Specification in position 2 = ∞ Ω

Both specifications in order	One specification not in order

Renew actuator.

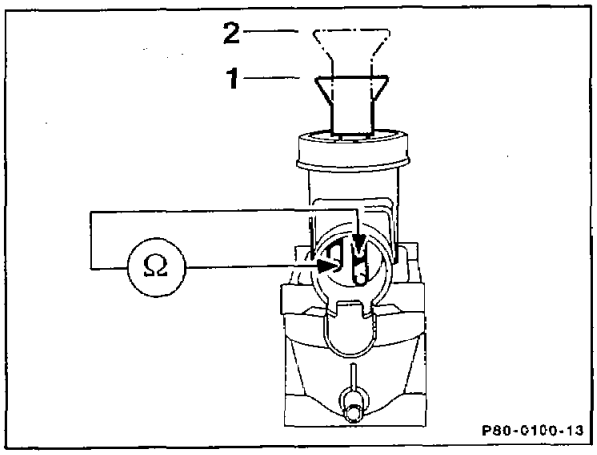

Testing opening function of actuator.

Connect digital multimeter to actuator as shown in ill. for testing resistance.
Specification in position 1 = ∞ Ω
Specification in position 2 ≤ 1 Ω

Both specifications in order	One specification not in order

Renew actuator.

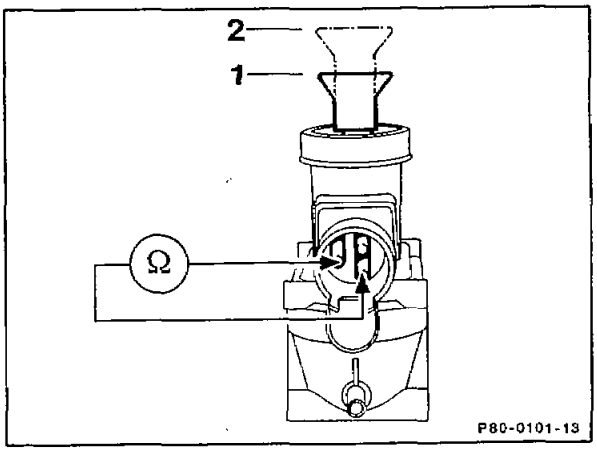

Testing power supply of actuator.

Connect digital multimeter to electrical wiring harness as shown in ill.
(key withdrawn from steering lock).

Specification: Battery voltage >10 V.

Yes	No

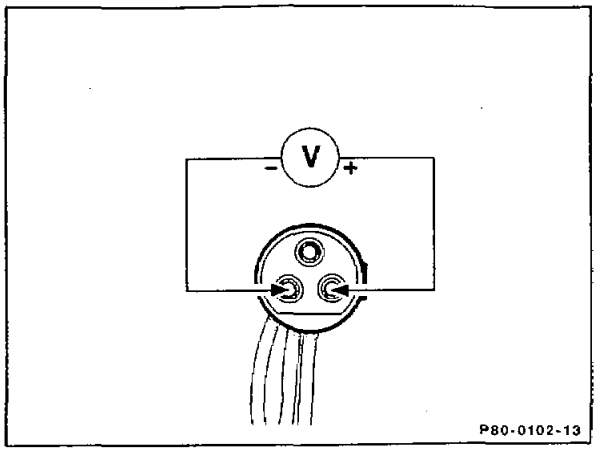

1 Test contacts of connector.
2 Test continuity of cable terminal 30 (rt/sw or rt/ws), ground cable (br/sw or br/ws) warning buzzer contact S8/2 and its ground cable (brown) according to wiring diagram (80-800). Repair or renew cable harness.

1 Test contacts of connectors.
2 Test continuity of control cable (left front door blue, right front door green, trunk lid yellow) according to wiring diagram (80-800).

End of test

80-116 Checking pneumatic function of actuator

Preceding operation:
Checking central locking system for leaks (80-120)

Operation no. of operation texts and work units
or standard texts and flat rates ..... 80-0300 to 0306

1st version up to approx. 08/90

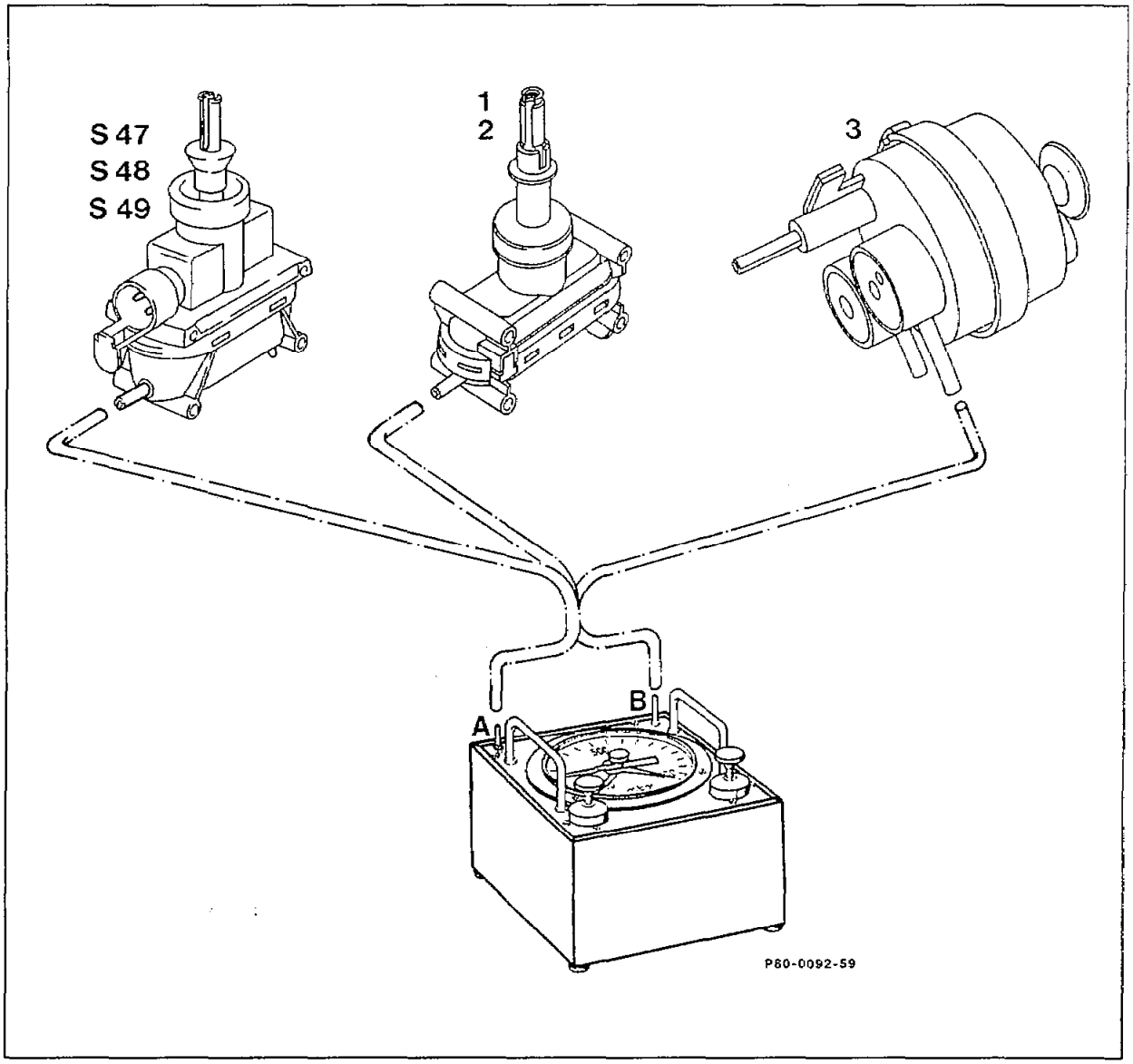

Test preparation	items 1-4
Leakage of actuator in pressure range	check. Permissible leakage rate per minute at a pressure of 600 mbar = 25 mbar.
Leakage of actuator in vacuum range	check. Permissible leakage rate per minute at a vacuum of 300 mbar = 25 mbar.

2nd version as of approx. 09/90

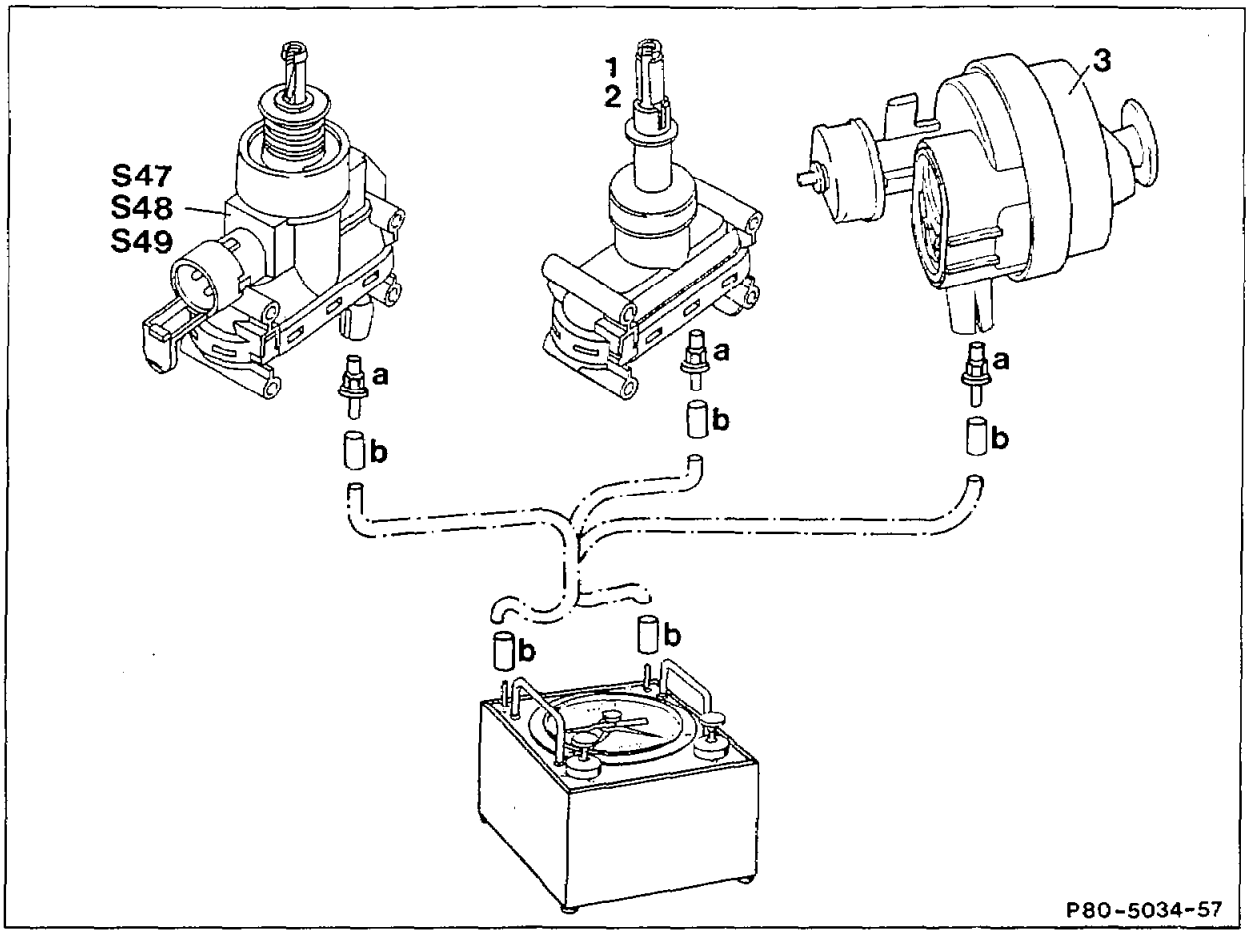

Test preparation	items 1-4.
Actuator	check for leaks in pressure range. Permissible leakage rate per minute at a pressure of 600 mbar = 25 mbar.
Actuator	check for leaks in the vacuum range. Permissible leakage rate per minute at a vacuum of 300 mbar = 25 mbar.

Special tool

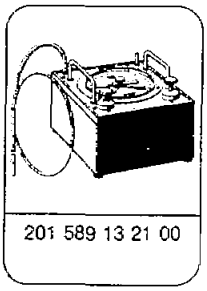

201 589 13 21 00

Parts for test	Part No.
Connector (b)	007 997 61 82
Cap	000 987 11 45
Adapter fitting (a)	129 805 00 44

Preparing test

1 Remove actuator (80-215, 80-220, 80-230).

2 Detach electrical cable harness and pneumatic line.

3 Push sliding sleeve (a) over switch rod mounting (b). It may be necessary to press sliding sleeve lock (arrow).

4 Connect tester 201 589 13 21 00 to pneumatic connection of actuator.

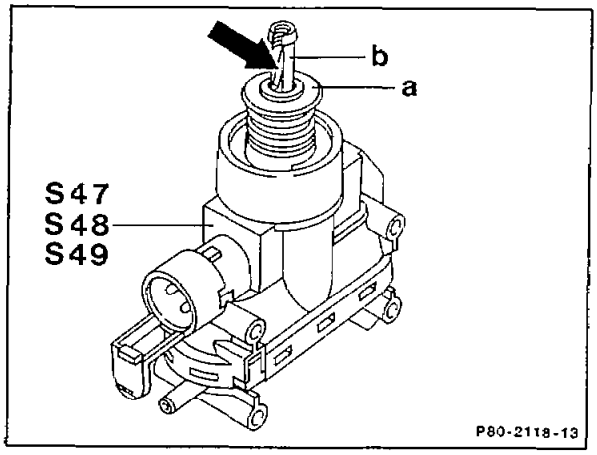

Note

If actuator has two pneumatic connections, seal one connection with cap 000 987 11 45.

Test

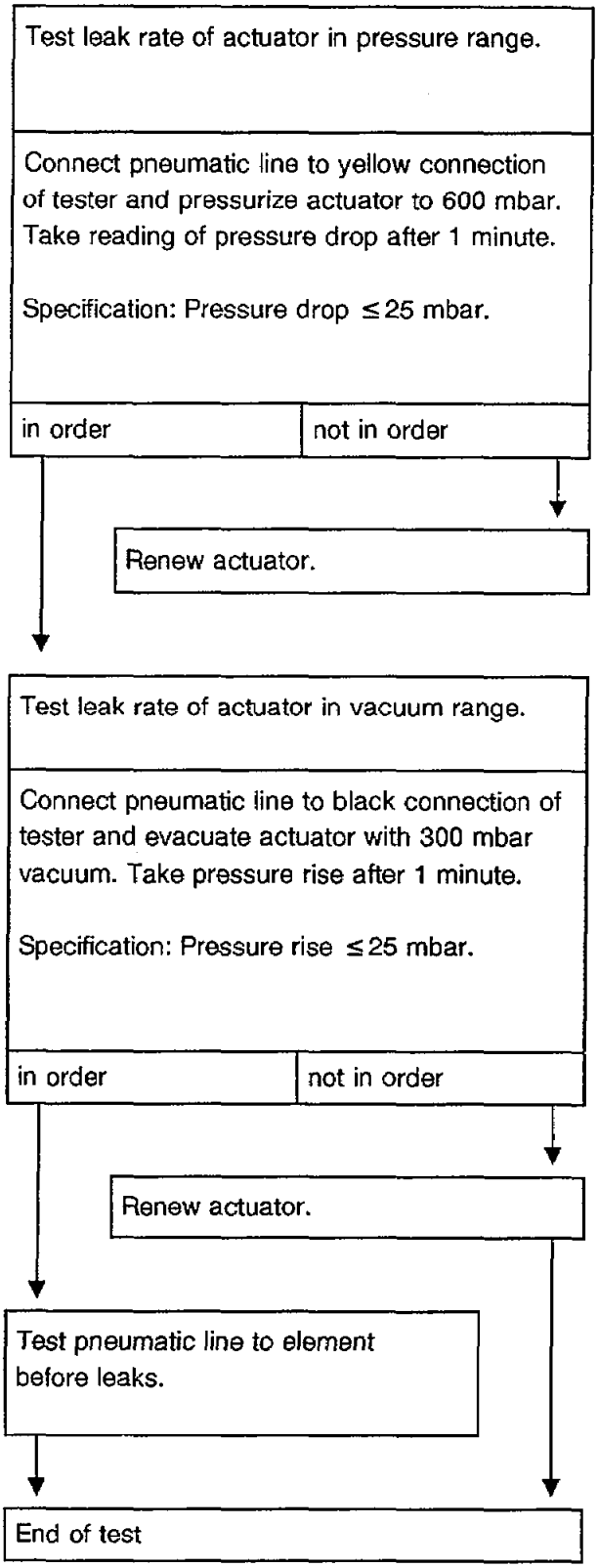

Note
If no leaks are detected at the element, test pneumatic line for leaks (80-125).

Preceding operation:
Checking pneumatic function of supply pump (80-108)

Operation no. of operation texts and work units or standard texts and flat rates 80-0032

A. Sedan up to approx. 08/90

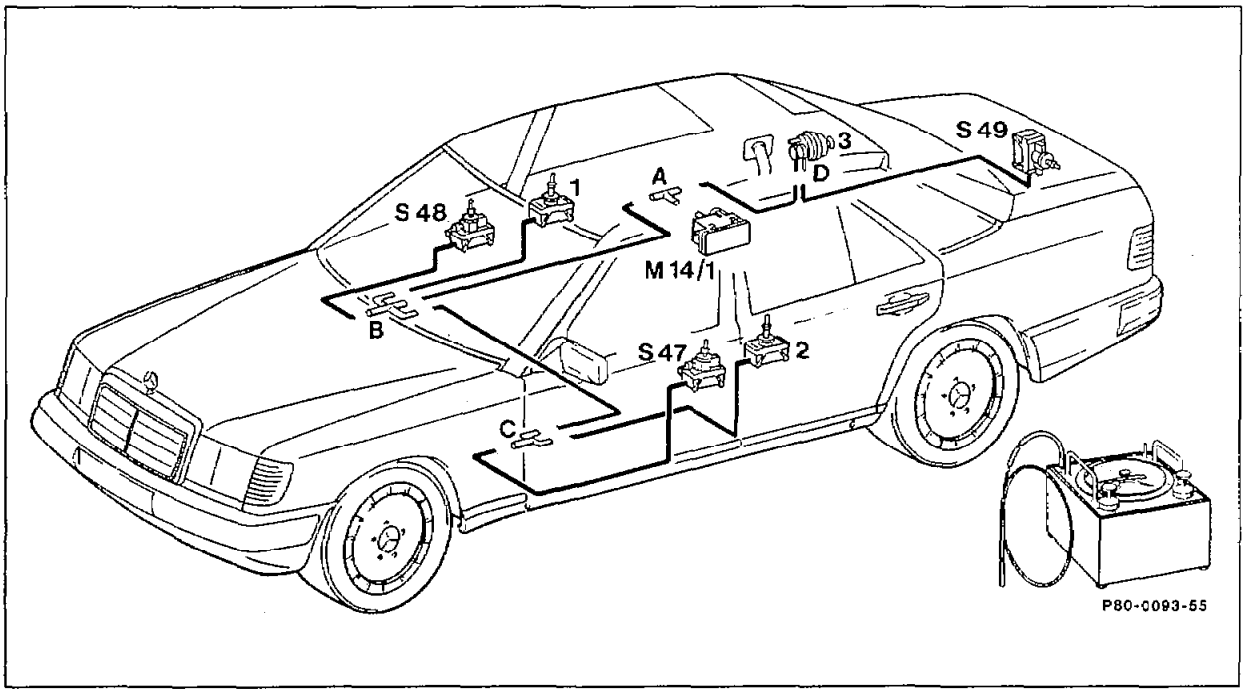

Connector or distributor	Scope of test	Follow-on test or remedy in case of leaks
A	Entire system	Check leaks in lines to passenger compartment or to trunk.
	Actuator and pneumatic lines in passenger compartment.	Check leaks at connector **B.**
	Actuator and pneumatic lines in trunk.	Check leaks at distributor or connector **D.**

Connector or distributor	Scope of test	Follow-on test or remedy in case of leaks
B	Pneumatic line to distributor **A**	Repair or renew.
	S48 Right front door actuator with connector and pneumatic line.	Check line, connector and actuator individually for leaks. Repair or renew faulty parts.
	Right rear door actuator **1** with connector and pneumatic line	Check line, connector and actuator individually for leaks. Repair or renew faulty parts.
	Actuator and pneumatic lines in left passenger compartment	Check leaks at distributor **C**.
C	Pneumatic line to distributor **B**	Repair or renew.
	S47 Left front door actuator with connector and pneumatic line.	Check line, connector and actuator individually for leaks. Repair or renew faulty parts.
	Left rear door actuator **2** with connector and pneumatic line.	Check line, connector and actuator individually for leaks. Repair or renew faulty parts.
D	Pneumatic line to distributor **A**	Repair or renew.
	S49 Trunk lid actuator with pneumatic line and connector.	Check line, connector and actuator individually for leaks. Repair or renew faulty parts.
	Fuel filler flap actuator **3**	*renew.*

Data

Permissible leak rate in 1 minute of entire system and actuator at 600 mbar pressure and 300 mbar vacuum	mbar	30
Permissible leak rate in 1 minute of individual lines at 600 mbar pressure	mbar	0
Fit-on length of connectors and distributors	mm	12 ± 2

Special tool

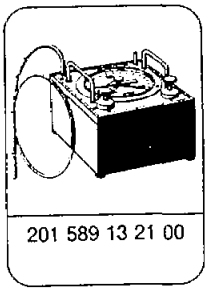

201 589 13 21 00

Parts for test	Part No.
Sealing cap	000 987 11 45
Adapter	129 805 00 44

Note
If not all the actuators operate properly although no leak is detected, check affected lines, distributors and connectors for kinks and clear passage.

When performing leak test of individual lines, connect tester to one end of the line and seal the other end with cap 000 987 11 45 (80-125).

The following test can be applied to all steps of the table listed above.

Preparing test
Connect tester for vacuum and pressure systems to distributor or to pneumatic line, respectively.

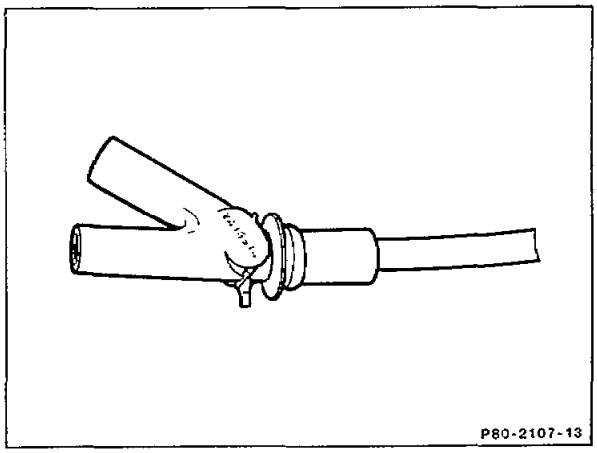

P80-2107-13

Test

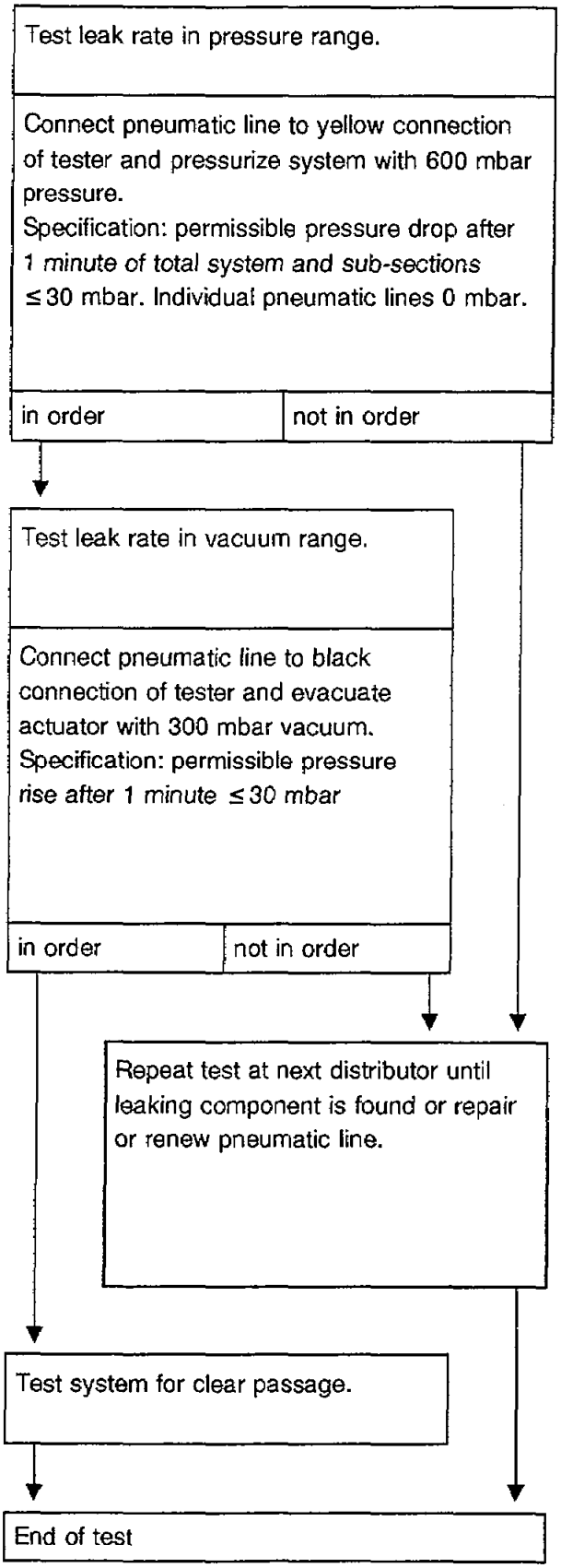
Test leak rate in pressure range.
Connect pneumatic line to yellow connection of tester and pressurize system with 600 mbar pressure.
Specification: permissible pressure drop after 1 minute of total system and sub-sections ≤ 30 mbar. Individual pneumatic lines 0 mbar.
in order
not in order
Test leak rate in vacuum range.
Connect pneumatic line to black connection of tester and evacuate actuator with 300 mbar vacuum.
Specification: permissible pressure rise after 1 minute ≤ 30 mbar
in order
not in order
Repeat test at next distributor until leaking component is found or repair or renew pneumatic line.
Test system for clear passage.
End of test

B. Station wagon 1st version up to approx. 01/86

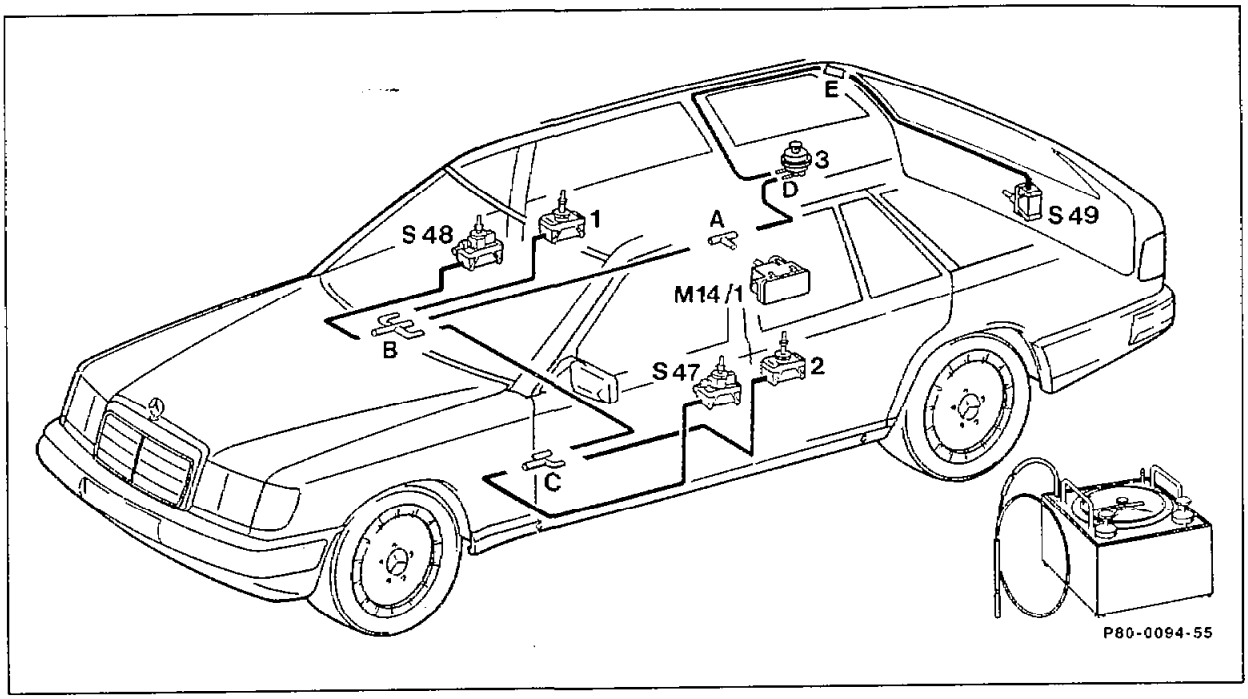

Connector or distributor	Scope of test	Follow-on test or remedy in case of leaks
A	Entire system	Check leaks in lines to passenger compartment or to trunk.
	Actuators and pneumatic lines in passenger compartment.	Check leaks at distributor **B.**
	Actuators and pneumatic lines in trunk.	Check leaks at distributor or connector **D.**
B	Pneumatic line to distributor **A**	Repair or renew.
	S48 Right front door actuator with connector and pneumatic line.	Check line, connector and actuator individually for leaks. Repair or renew faulty parts.
	Right rear door actuator **1** with connector and pneumatic line.	Check line, connector and actuator individually for leaks. Repair or renew faulty parts.
	Actuator and pneumatic lines in left passenger compartment.	Check leaks at distributor **C.**

Connector or distributor	Scope of test	Follow-on test or remedy in case of leaks
C	Pneumatic line to distributor **B**	Repair or renew.
	S47 Left front door actuator with connector and pneumatic line.	Check line, connector and actuator individually for leaks. Repair or renew faulty parts.
	Left rear door actuator **2** with connector and pneumatic line.	Check line, connector and actuator individually for leaks. Repair or renew faulty parts.
D	Fuel filler flap actuator **3**	renew.
	Pneumatic line to distributor **A**	repair or renew.
	Pneumatic line to connector **E**	check leaks at connector **E**.
E	Pneumatic line to connector **D**	repair or renew.
	S49 Tailgate with pneumatic line and connector.	check line, connector and actuator individually for leaks. Repair or renew faulty parts.

Data

Permissible leak rate in 1 minute of entire system and actuators at 600 mbar pressure and 300 mbar vacuum	mbar	30
Permissible leak rate in 1 minute of individual lines at 600 mbar pressure	mbar	0
Fit-on length of connectors and distributors	mm	12 ± 2

Special tool

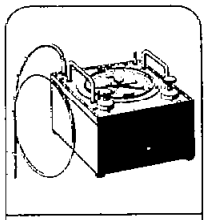

201 589 13 21 00

Part for test	Part No.
Sealing cap	000 987 11 45

Note
If not all the actuators operate properly although no leak is detected, check affected lines, distributors and connectors for kinks and clear passage.

When performing leak test of individual lines, connect tester to one end of the line and seal the other end with cap 000 987 11 45

The following test can be applied to all steps of the table listed above.

Preparing test
Connect tester for vacuum and pressure systems to distributor or to pneumatic line, respectively.

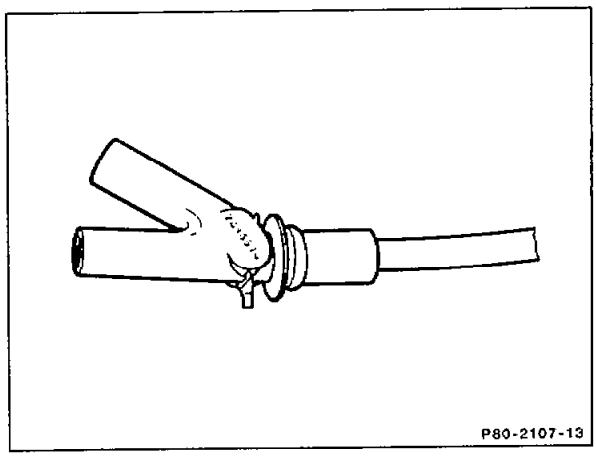

P80-2107-13

Test

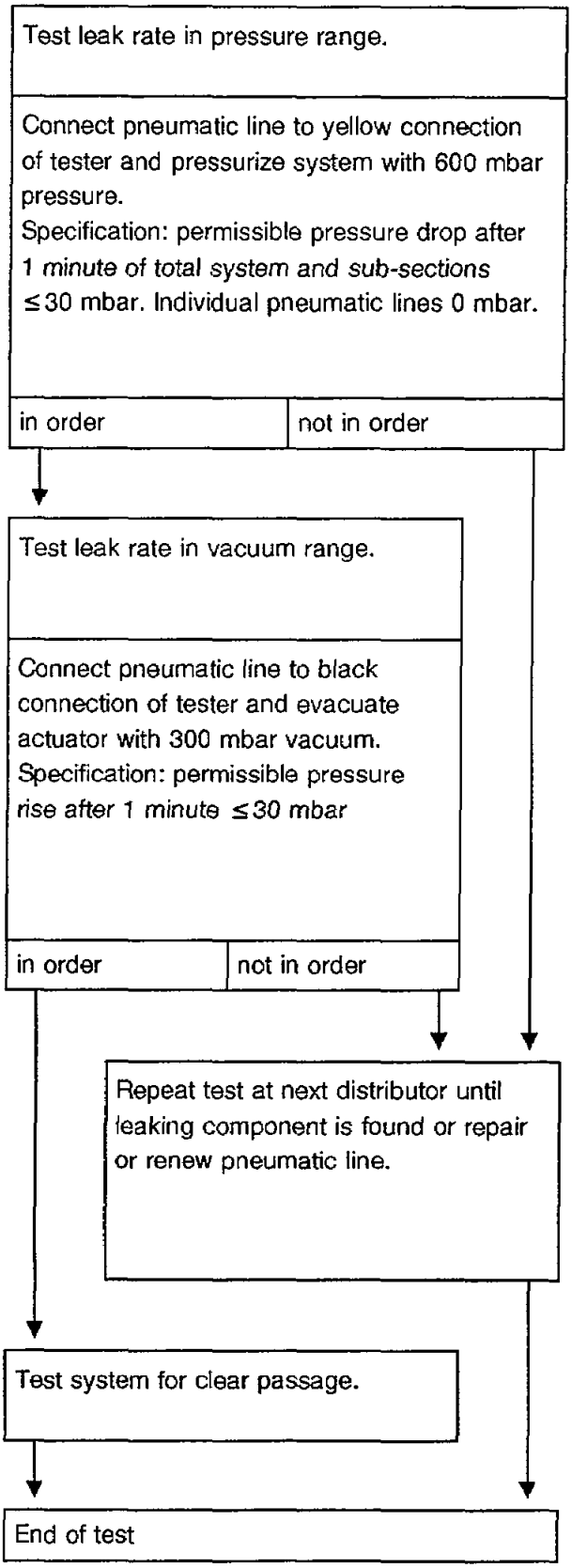
Test leak rate in pressure range.
Connect pneumatic line to yellow connection of tester and pressurize system with 600 mbar pressure.
Specification: permissible pressure drop after 1 minute of total system and sub-sections ≤30 mbar. Individual pneumatic lines 0 mbar.
in order
not in order
Test leak rate in vacuum range.
Connect pneumatic line to black connection of tester and evacuate actuator with 300 mbar vacuum.
Specification: permissible pressure rise after 1 minute ≤30 mbar
in order
not in order
Repeat test at next distributor until leaking component is found or repair or renew pneumatic line.
Test system for clear passage.
End of test

C. Station wagon 2nd version as of approx. 02/86 up to approx. 08/90

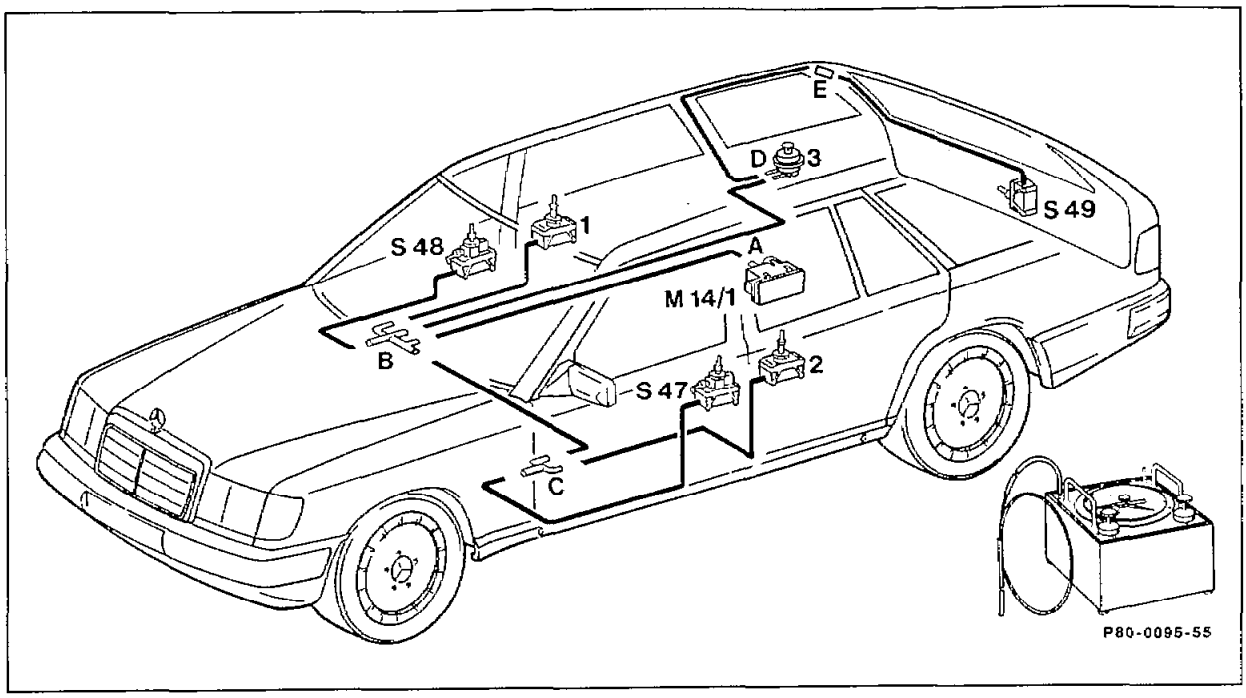

Connector or distributor	Scope of test	Follow-on test or remedy in case of leaks
A	Entire system	Check leak rate at distributor **B**.
B	Actuators and pneumatic lines in baggage area.	Check leak rate at connectors **D**.
	Pneumatic line to distributor **A**	repair or renew.
	S48 Right front door actuator with connector and pneumatic line.	Check line, connector and actuator individually for leaks. Repair or renew faulty parts.
	Right rear door actuator **1** with connector and pneumatic line.	Check line, connector and actuator individually for leaks. Repair or renew faulty parts.
	Actuator and pneumatic lines in left passenger compartment.	Check leaks at distributor **C**.

Connector or distributor	Scope of test	Follow-on test or remedy in case of leaks
C	Pneumatic line to distributor **B**	repair or renew.
	S47 Left front door actuator with connector and pneumatic line.	Check line, connector and actuator individually for leaks. Repair or renew faulty parts.
	Left rear door actuator **2** with connector and pneumatic line.	Check line, connector and actuator individually for leaks. Repair or renew faulty parts.
D	Fuel filler cap actuator **3**	renew.
	Pneumatic line to distributor **B**	repair or renew.
	Pneumatic line to connector **E**	check leaks at connector **E.**
E	Pneumatic line to connector **D.**	repair or renew.
	S49 Tailgate with pneumatic line and connector.	check line, connector and actuator individually for leaks. Repair or renew faulty parts.

Data

Permissible leak rate in 1 minute o f entire system and actuators at 600 mbar pressure and 300 mbar vacuum	mbar	30
Permissible leak rate in 1 minute of individual lines at 600 mbar pressure	mbar	0
Fit-on length of connectors and distributors	mm	12 ± 2

Special tool

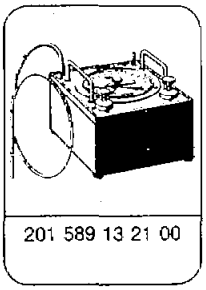

Part for test	Part No.
Sealing cap	000 987 11 45

Note
If not all the actuators operate properly although no leak is detected, check affected lines, distributors and connectors for kinks and clear passage.

When performing leak test of individual lines, connect tester to one end of the line and seal the other end with cap 000 987 11 45.

The following test can be applied to all steps of the table listed above.

Preparing test
Connect tester for vacuum and pressure systems to distributor or to pneumatic line, respectively.

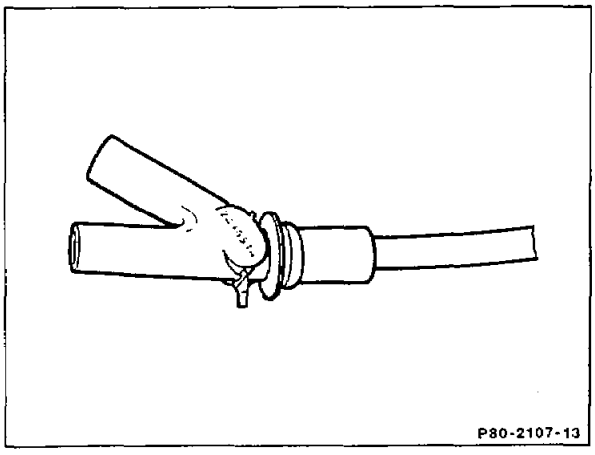

Test

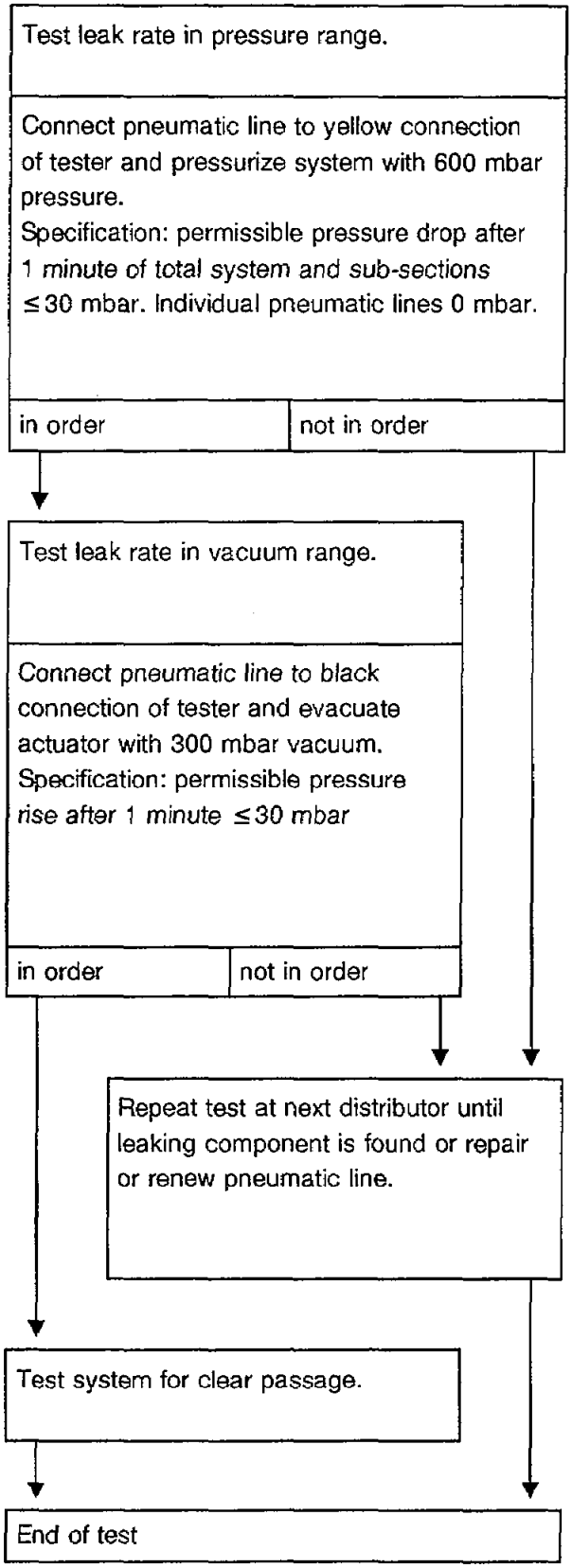
Test leak rate in pressure range.
Connect pneumatic line to yellow connection of tester and pressurize system with 600 mbar pressure.
Specification: permissible pressure drop after 1 minute of total system and sub-sections ≤ 30 mbar. Individual pneumatic lines 0 mbar.
in order
not in order
Test leak rate in vacuum range.
Connect pneumatic line to black connection of tester and evacuate actuator with 300 mbar vacuum.
Specification: permissible pressure rise after 1 minute ≤ 30 mbar
in order
not in order
Repeat test at next distributor until leaking component is found or repair or renew pneumatic line.
Test system for clear passage.
End of test

D. Coupé up to approx. 08/90

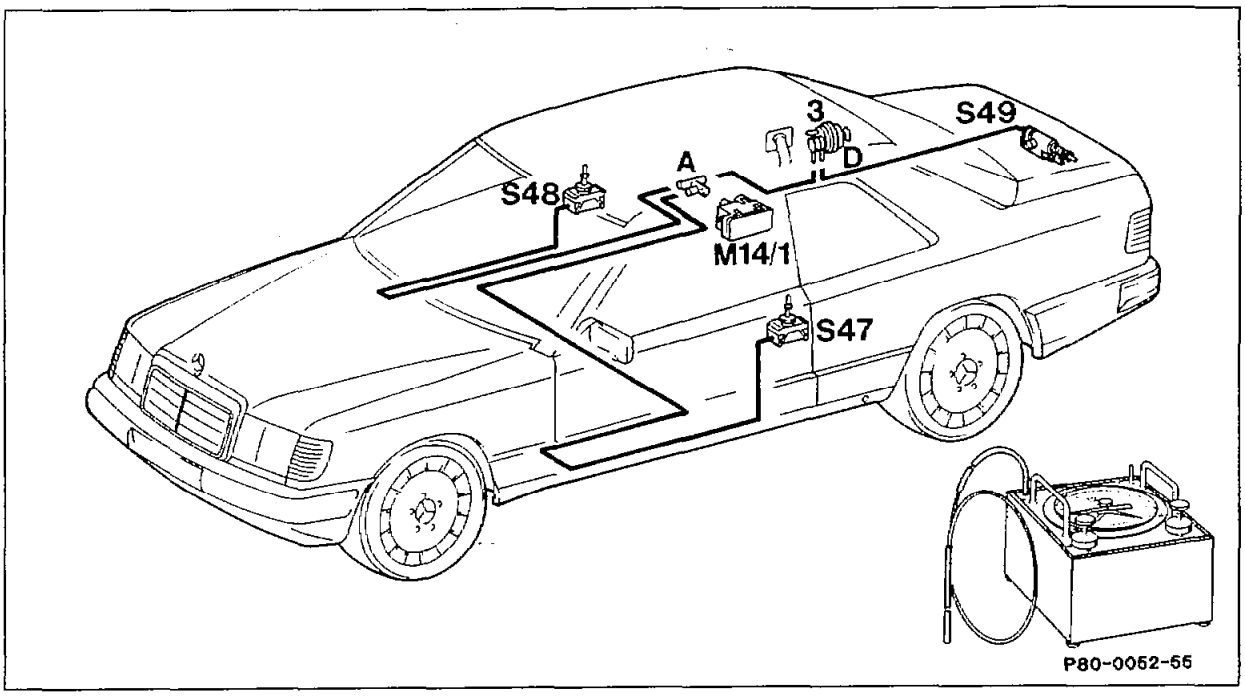

Connector or distributor	Scope of test	Follow-on test or remedy in case of leaks
A	Entire system	Check leaks at lines to passenger compartment or to trunk.
	S48 Right front door actuator with connector and pneumatic line.	Check line, connector and actuator individually for leaks. Repair or renew faulty parts.
	S47 Left front door actuator with connector and pneumatic line.	Check line, connector and actuator individually for leaks. Repair or renew faulty parts.
	Actuators and pneumatic lines in trunk.	Check leaks at distributor or connector in **D.**
D	Pneumatic line to distributor **A**	Repair or renew.
	S49 Trunk lid actuator with pneumatic line and connector.	Check line, connector and actuator individually for leaks. Repair or renew faulty parts.
	Fuel filler flap actuator **3**	renew.

Data

Permissible leak rate in 1 minute of entire system and actuators at 600 mbar pressure and 300 mbar vacuum	mbar	30
Permissible leak rate in 1 minute of individual lines at 600 mbar pressure	mbar	0
Fit-on length of connectors and distributors	mm	12 ± 2

Special tool

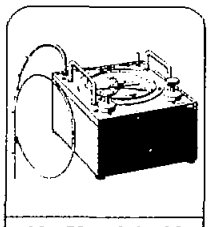

201 589 13 21 00

Parts for test	Part No.
Sealing cap	000 987 11 45
Adapter	129 805 00 44

Note

If not all the actuators operate properly although no leak is detected, check affected lines, distributors and connectors for kinks and clear passage.

When performing leak test of individual lines, connect tester to one end of the line and seal the other end with cap 000 987 11 45

The following test can be applied to all steps of the table listed above.

Preparing test

Connect tester for vacuum and pressure systems to distributor or to pneumatic line, respectively.

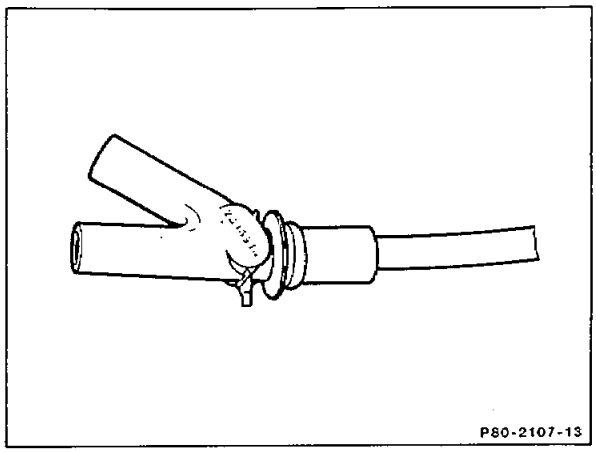

Test

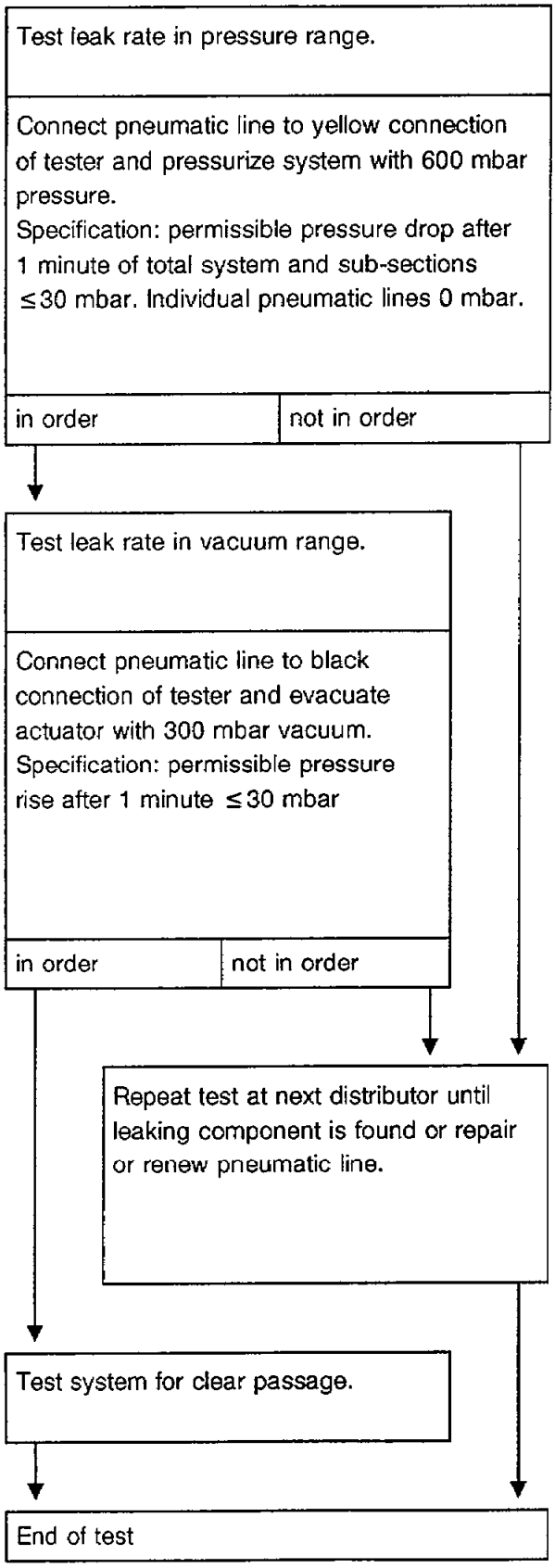
Test leak rate in pressure range.
Connect pneumatic line to yellow connection of tester and pressurize system with 600 mbar pressure.
Specification: permissible pressure drop after 1 minute of total system and sub-sections ≤30 mbar. Individual pneumatic lines 0 mbar.
in order
not in order
Test leak rate in vacuum range.
Connect pneumatic line to black connection of tester and evacuate actuator with 300 mbar vacuum.
Specification: permissible pressure rise after 1 minute ≤30 mbar
in order
not in order
Repeat test at next distributor until leaking component is found or repair or renew pneumatic line.
Test system for clear passage.
End of test

E. Sedan, station wagon, coupé as of approx. 09/90, cabriolet as of start of production

Sedan

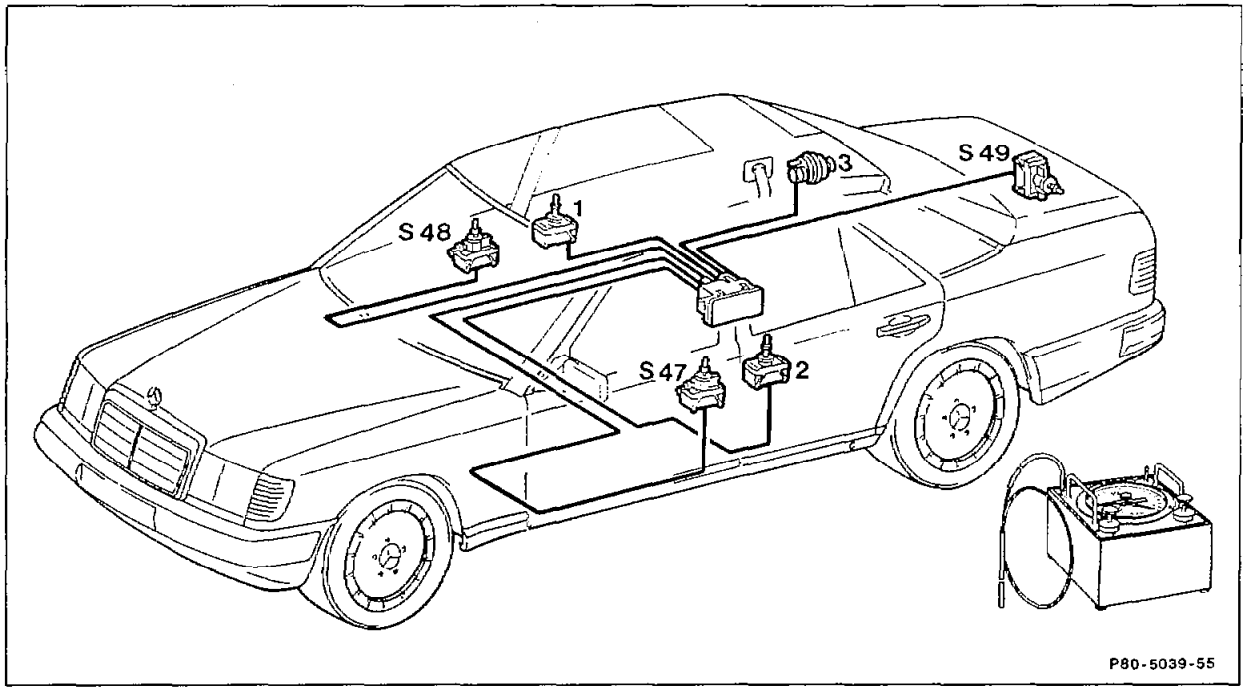

Station wagon

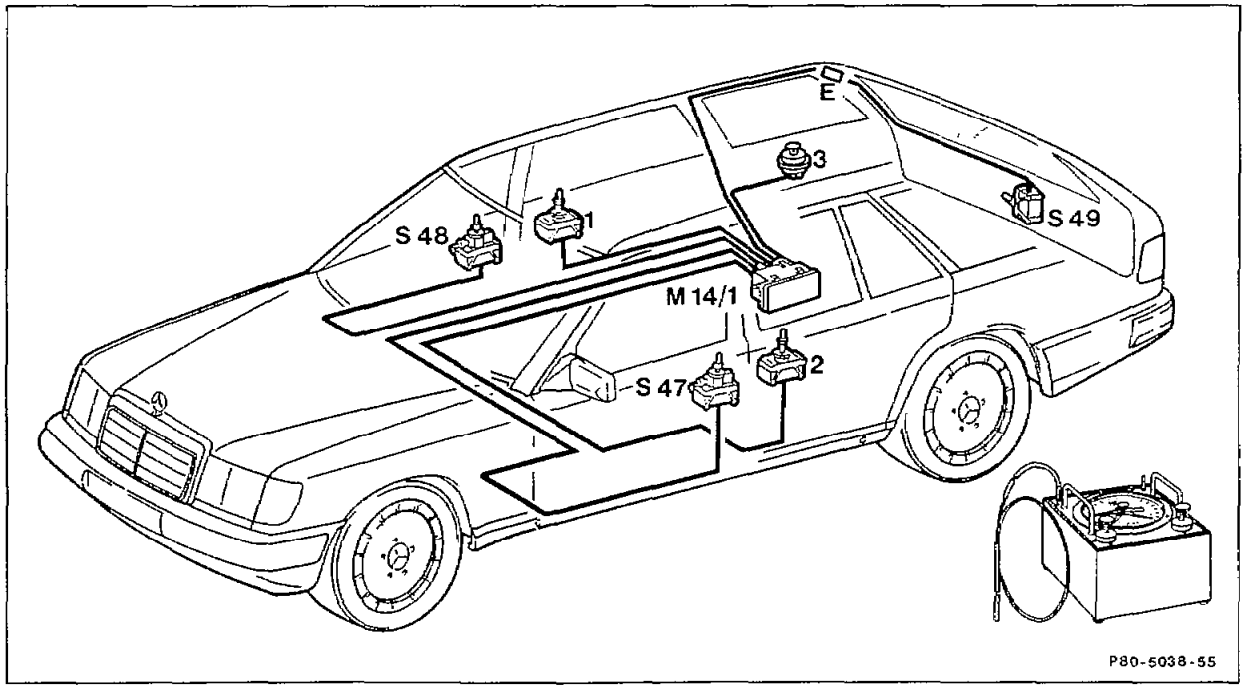

Coupé and cabriolet

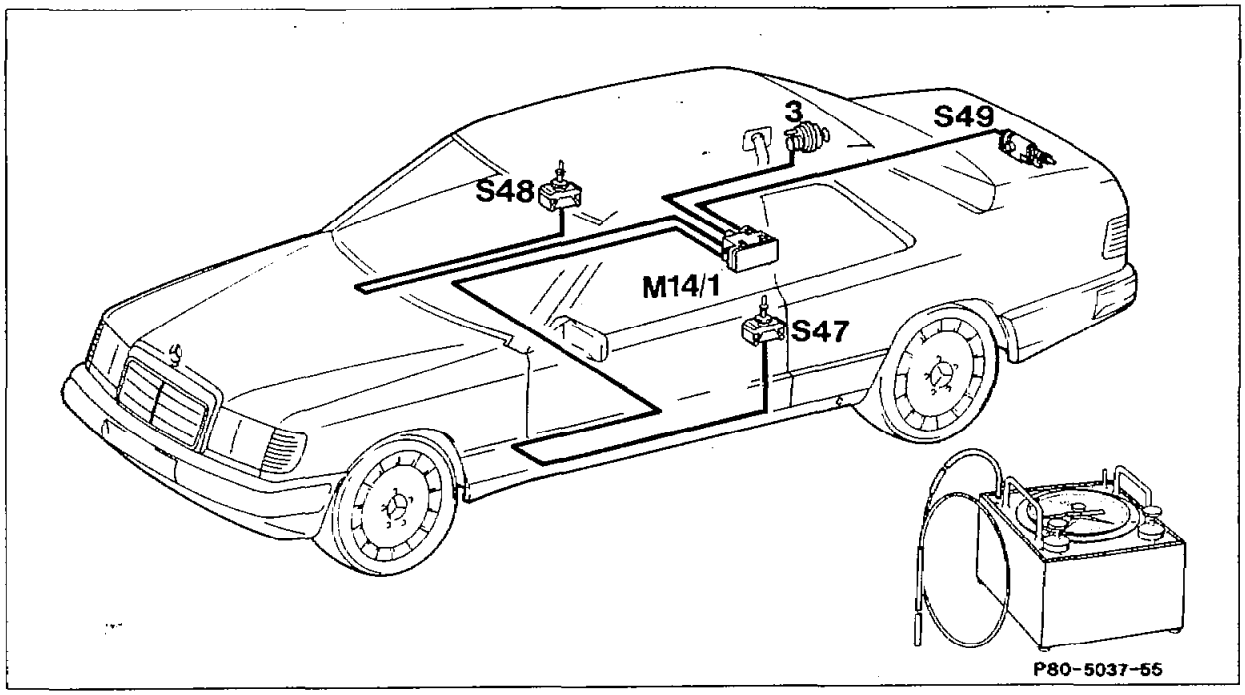

Data (mbar)

Permissible leakage rate of entire system per minute at a pressure of 600 mbar and a vacuum of 300 mbar.	≤30
Permissible leakage rate per minute of actuators with lines at a pressure of 600 mbar and a vacuum of 300 mbar.	≤25
Permissible leakage rate per minute of distributor at a pressure of 600 mbar.	0

Special tool

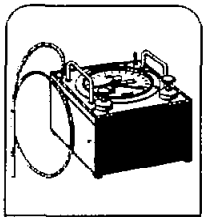

201 589 13 21 00
00 42 80

Part for test	Part no.
1 plug	129 805 04 44

a) Checking entire system for leaks

Test preparation

1. Press out locking device with a screwdriver.

2. Press pull-off lock upwards and pull off distributor.

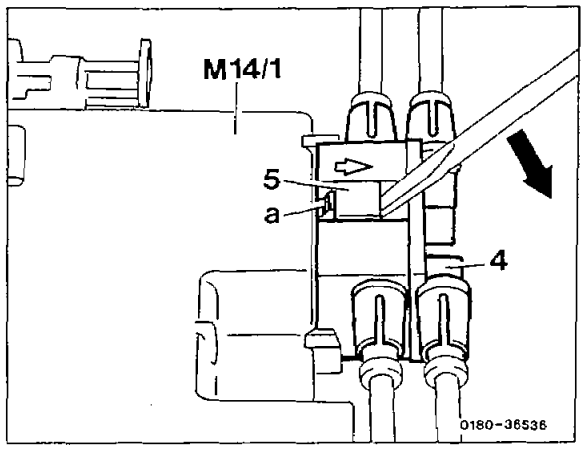

4 6-point distributor
5 Locking device
M14/1 Supply pump, central locking system (ZV)
a Pull-off lock

3. Connect tester to underside of distributor.

Testing

Test step	Scope of test	Test connection	Operation/ requirement	Nominal value	Possible cause/remedy
1	Entire system in pressure range	Yellow connection on tester Pneumatic connection on underside of distributor	Apply a pressure of 600 mbar to the system	Pressure drop ≤ 30 mbar per minute	Distributor, pneumatic line or actuator leaking
2	Entire system in vacuum range	Black connection on tester Pneumatic connection on underside of distributor	Evacuate system with a vacuum of 300 mbar	Pressure rise ≤ 30 mbar in 1 minute	Distributor, pneumatic line or actuator leaking

b) Checking distributor for leaks

Test preparation

1 Lever off all pneumatic lines on distributor using an open-end wrench (width across flats 7).

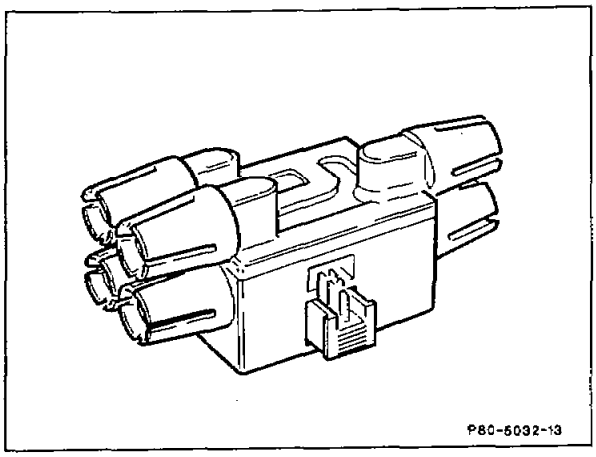

2 Close all connections on distributor with plugs (part no. 124 805 02 44).

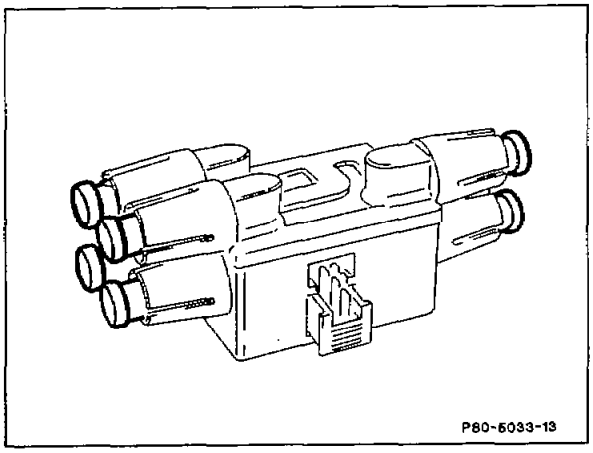

3 Connect tester to pneumatic connection on underside of distributor.

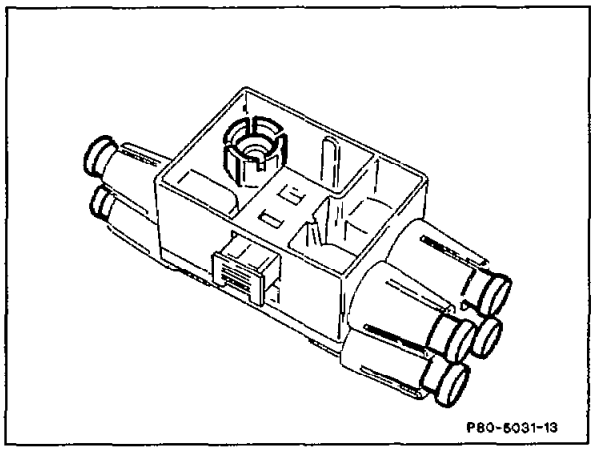

Testing

Test *step*	Scope of *test*	Test connection	Operation/ *requirement*	Nominal *value*	Possible cause/remedy
1	Leaks at central locking system connections	Yellow connection on tester Pneumatic connection on underside of distributor	Apply a pressure of 600 mbar to distributor	Pressure drop 0 mbar per minute	Distributor leaking

c) Checking lines with actuators for leaks

Test preparation

1 Connect tester with connector (Part no. 007 997 61 82) to the pneumatic line for the left front door.

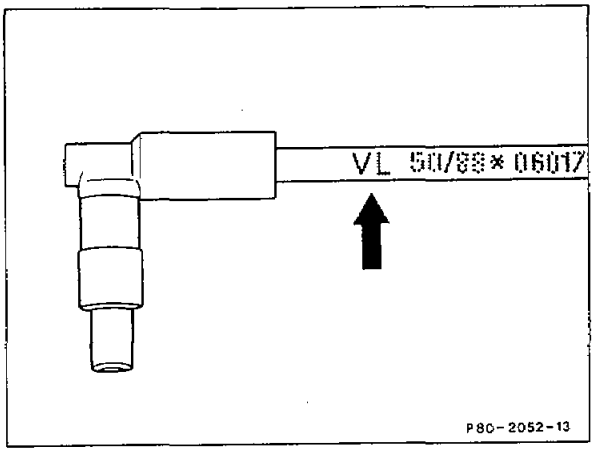

Note

If an actuator does not work properly although no leaks could be detected, check the line concerned for kinks and clear passage.

Testing

Test step	Scope of test	Test connection	Operation/ requirement	Nominal value	Possible cause/remedy
1	**S47** Left front door actuator with pneumatic line in pressure range	Yellow connection on tester Marking **VL** on pneumatic line	Apply a pressure of 600 mbar to actuator and line	Pressure drop ≤ 25 mbar per minute	**S47** actuator or pneumatic line leaking (80-125)
2	**S47** Left front door actuator with pneumatic line in vacuum range	Black connection on tester Marking **VL** on pneumatic line	Evacuate actuator and line with a vacuum of 300 mbar	Pressure rise ≤ 25 mbar per minute	**S47** actuator or pneumatic line leaking (80-125).

Test step	Scope of test	Test connection	Operation/ requirement	Nominal value	Possible cause/remedy
3	**S48** Right front door actuator with pneumatic line in pressure range	Yellow connection on tester Marking **VR** on pneumatic line	Apply a pressure of 600 mbar to actuator and line	Pressure drop ≤ 25 mbar per minute	**S48** actuator or pneumatic line leaking (80-125)
4	**S48** Right front door actuator with pneumatic line in vacuum range	Black connection on tester Marking **VR** on pneumatic line	Evacuate actuator and line with a vacuum of 300 mbar	Pressure rise ≤ 25 mbar per minute	**S48** actuator or pneumatic line leaking (80-125)
5	**S49** Trunk lid lock actuator with pneumatic line in pressure range	Yellow connection on tester Marking **HD** on pneumatic line	Apply pressure of 600 mbar to actuator and line	Pressure drop ≤ 25 mbar per minute	**S49** actuator or pneumatic line leaking (80-125)
6	**S49** Trunk lid lock actuator with pneumatic line in vacuum range	Black connection on tester Marking **HD** on pneumatic line	Evacuate actuator and line with a vacuum of 300 mbar	Pressure rise ≤ 25 mbar per minute	**S49** actuator or pneumatic line leaking (80-125)

Test step	Scope of test	Test connection	Operation/ requirement	Nominal value	Possible cause/remedy
7	Left rear door actuator with pneumatic line in pressure range	Yellow connection on tester Marking **HL** on pneumatic line	Apply a pressure of 600 mbar to actuator and line	Pressure drop ≤ 25 mbar per minute	Left rear door actuator or pneumatic line leaking (80-125)
8	Left rear door actuator with pneumatic line in vacuum range	Black connection on tester Marking **HL** on pneumatic line	Evacuate actuator and line with a vacuum of 300 mbar	Pressure rise ≤ 25 mbar per minute	Left rear door actuator or pneumatic line leaking (80-125)
9	Right rear door actuator with pneumatic line in pressure range	Yellow connection on tester Marking **HR** on pneumatic line	Apply a pressure of 600 mbar to actuator and line	Pressure drop ≤ 25 mbar per minute	Right rear door actuator or pneumatic line leaking (80-125)
10	Right rear door actuator with pneumatic line in vacuum range	Black connection on tester Marking **HR** on pneumatic line	Evacuate actuator and line with a vacuum of 300 mbar	Pressure rise ≤ 25 mbar per minute	Right rear door actuator or pneumatic line leaking (80-125)
11	Fuel filler flap actuator with pneumatic line in pressure range	Yellow connection on tester Marking **KE** on pneumatic line	Apply a pressure of 600 mbar to actuator and line	Pressure drop ≤ 25 mbar per minute	Fuel filler flap actuator or pneumatic line leaking (80-125)
12	Fuel filler flap actuator with pneumatic line in vacuum range	Black connection on tester Marking **KE** on pneumatic line	Evacuate actuator and line with a vacuum of 300 mbar	Pressure rise ≤ 25 mbar per minute	Fuel filler flap actuator or pneumatic line leaking (80-125)

F. Vehicles for (D) as of 03/94 and vehicles with code 885

See diagnosis manual

80-125 Checking pneumatic line for leaks

Preceding operation:
Checking pneumatic function of actuator (80-116)

Operation no. of operation texts and work units
or standard texts and flat rates .....

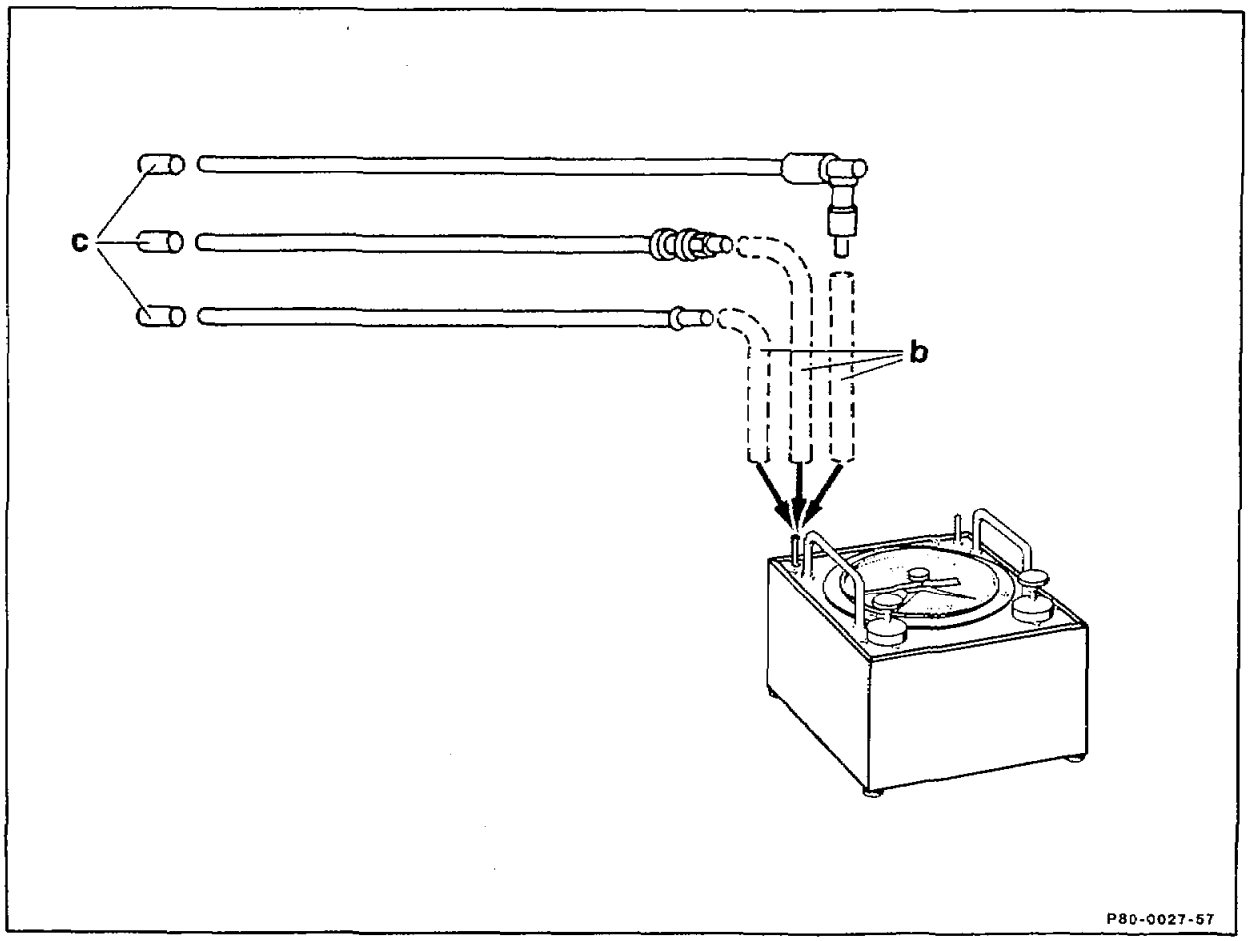

Data

Permissible leak rate in 1 minute at 600 mbar pressure	mbar	0
Fit-on length of connectors and distributors	mm	12 ± 2

Special tool

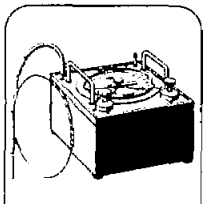

201 589 13 21 00

Parts for test	Part No.
Sealing cap (c)	000 987 11 45
Connector (b)	007 997 61 82

Preparing test

When performing the leak test on individual lines, connect tester to one end of the line and seal other end with cap 000 987 11 45.

Test step	Scope of test	Test connection	Operation/ Requirement	Specification	Possible cause/Remedy
1	Leak rate in pressure range	Yellow connection on tester	Pressurize pneumatic line with 600 mbar pressure	Pressure drop 0 mbar in 1 minute	Leak and pneumatic line/repair or renew.

Repair Instruction

If leak exists at end of line, replace connection plug or connection bush by appropriate adapter with approx. 50 mm long rubber connector.

Repair leaks in line itself with rubber connector.

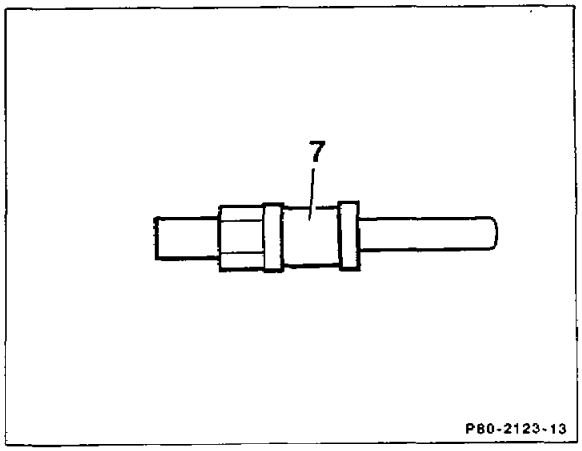

80-215 Removing and installing actuator (S47, S48, S49)

Preceding operation:
Checking electrical function of central locking system (80-104)
Checking central locking system for leaks (80-120)

Operation no. of operation texts and work units
or standard texts and flat rates 80-0300, 80-0301, 80-0304, 80-

A. Front doors

a) Sedan and Station Wagon up to Vehicle Ident End No. A 391255/F 025885

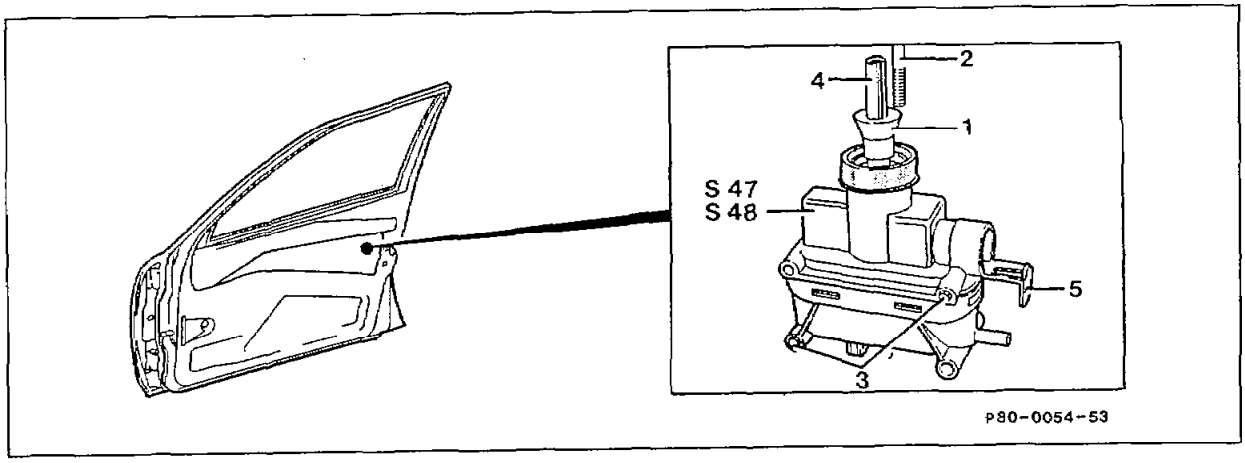

Door panelling luggage compartment lining	remove.
Sliding sleeve (1)	push back.
Shift rod (2)	press out.
Bolts (3)	slacken.
Actuator (S47, S48, S49)	detach.
Strain relief (5)	press away.
Electric lead and pneumatic line	disconnect.
Electric or pneumatic function of actuator (S47, S48)	check (80-112) or (80-116).
Move actuator (S47, S48) into installation position	push sliding sleeve (1) back fully and withdraw shift rod mounting (4) as far as detent.
Actuator	install in the reverse order.

b) Sedan and Station Wagon from Vehicle Ident End No. A 391256/F 025886

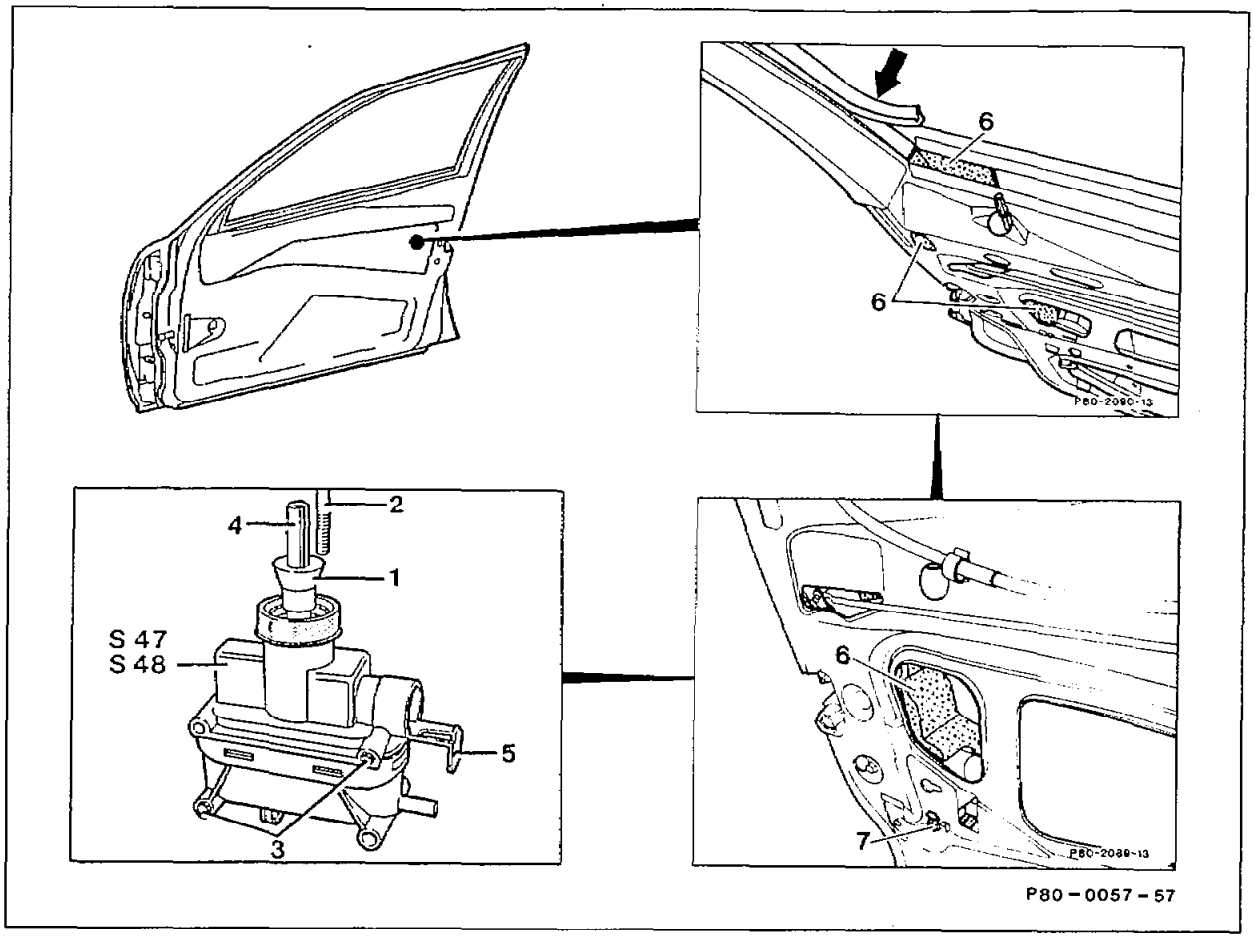

Door panelling	remove.
Crank window	slacken and move into door shaft.
Sealing rail on window guide	withdraw slightly down the way.
Bolt (7)	unscrew.
Cover (6)	take off.
Sliding sleeve (1)	push back.
Shift rod (2)	press out.
Bolt (3)	slacken.
Actuator (S47, S48)	detach.
Strain relief (5)	push away.
Electric lead and pneumatic line	disconnect.
Electric or pneumatic function of actuator (S47, S48)	check (80–112) and (80–116).
Actuator (S47, S48), move into installation position	push sliding sleeve (1) back fully and withdraw shift rod mounting (4) as far as detent.
Actuator	install in reverse order.

c) Coupé and cabriolet

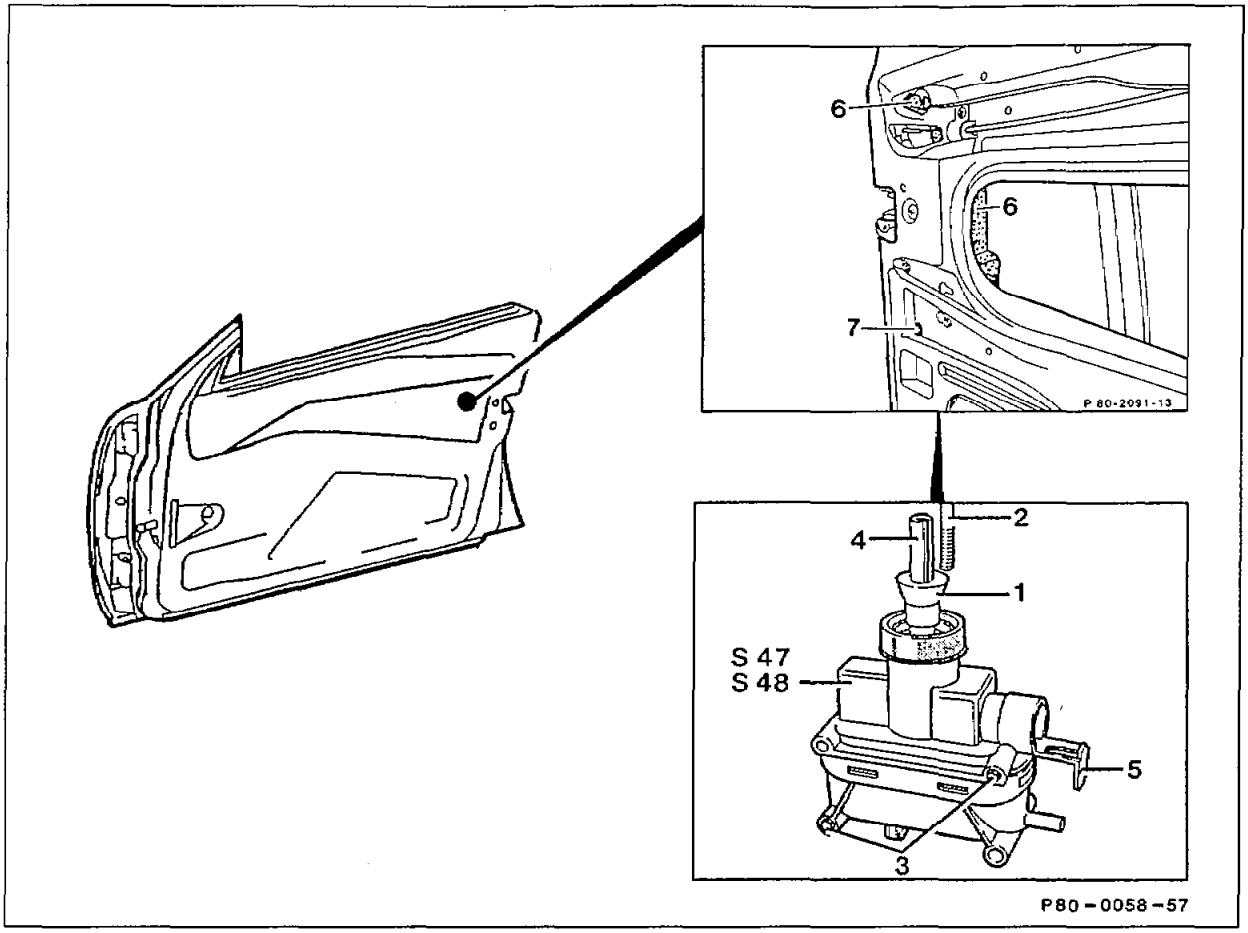

Door panelling	remove.
Bolt (7)	unscrew.
Cover (6)	take off.
Sliding sleeve (1)	push back.
Shift rod (2)	push out.
Bolt (3)	slacken.
Actuator (S47, S48)	detach.
Strain relief (5)	push away.
Electric lead and pneumatic line	disconnect.
Electric or pneumatic function of actuator (S47, S48)	check (80–112) and (80–116).
Actuator (S47, S48), move into installation position	push sliding sleeve (1) back fully and withdraw shift rod mounting (4) as far as detent.
Actuator	install in reverse order.

B. Tailgate

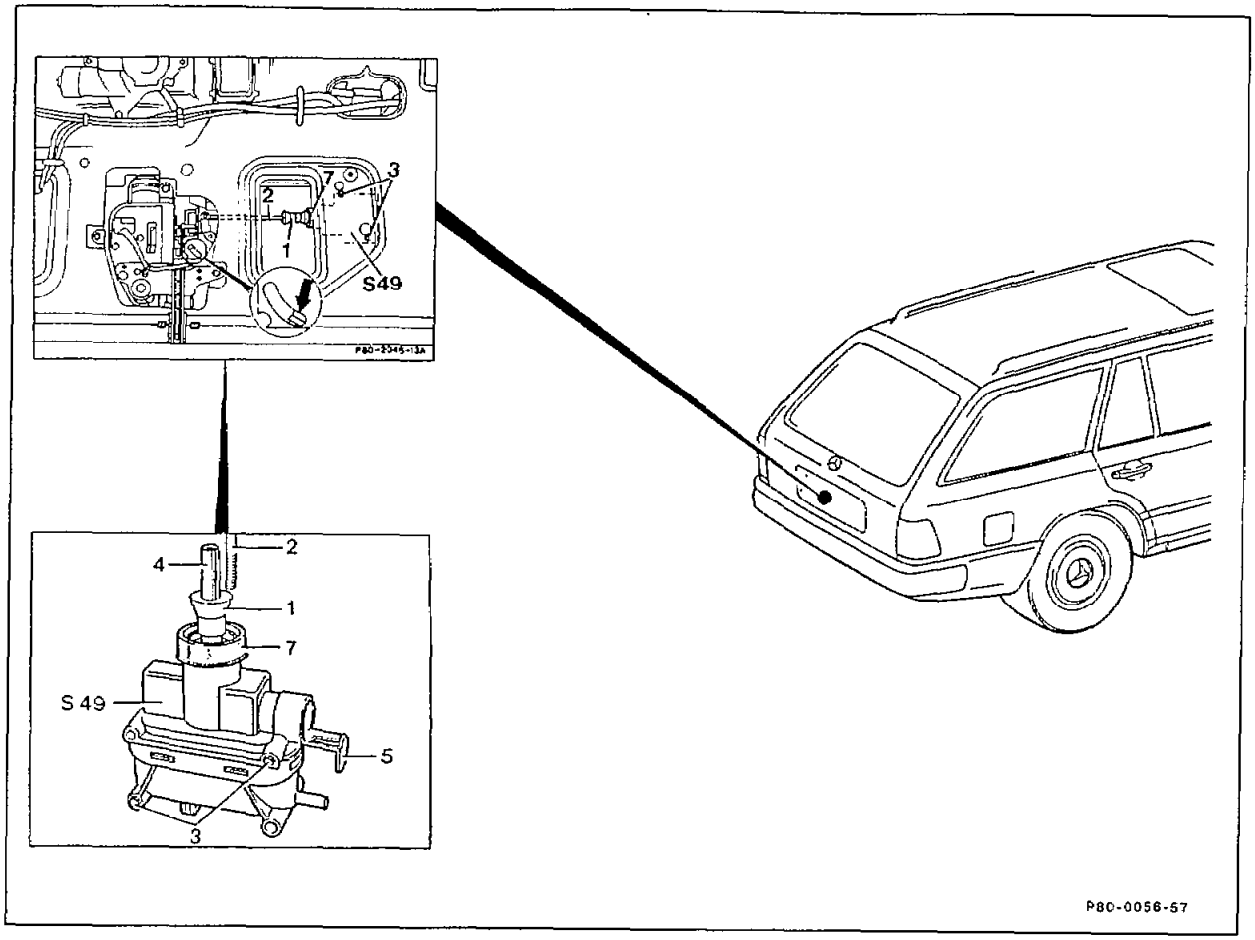

Door panelling	remove.
Sliding sleeve (1)	push back.
Shift rod (2)	push out.
Bolt (3)	slacken.
Actuator (S49)	detach.
Strain relief (5)	push away.
Electric lead and pneumatic line	disconnect.
Electric or pneumatic operation of actuator (S49)	check (80-112) or (80-116).
Actuator (S49), move into installation position	push sliding sleeve (1) back fully and withdraw shift rod mounting (4) as far as detent. Push shift rod (2) away from actuator up to stop (arrow) when installing.
Actuator	install in reverse order.

⚠

Install only actuators with **black** rubber cup seal (7).

C. Trunk lid

a) Sedan

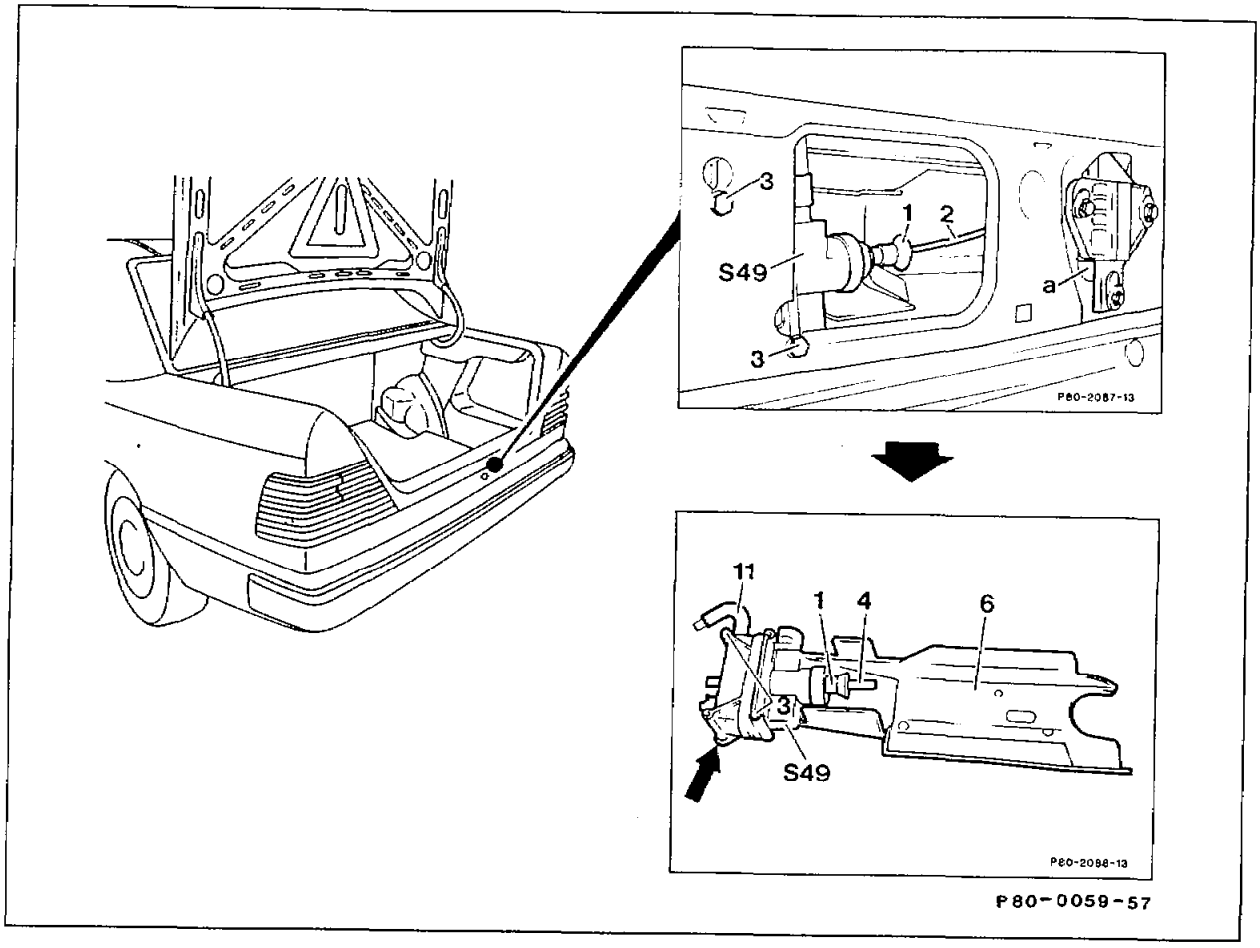

Trunk panelling at rear centre section	remove.
Sliding sleeve (1)	push back.
Shift rod (2)	push out.
Bolt (3)	slacken.
Actuator (S49) with cover (6)	detach and remove.
Electric lead and pneumatic line	disconnect.
Cover (6)	unscrew (arrow).
Electric or pneumatic function of actuator (S49)	check (80-112) or (80-116).
Actuator (S49), move into installation position	push sliding sleeve (1) back fully and withdraw shift rod mounting (4) as far as detent. When installing, push shift rod (2) up to stop away from actuator.
Actuator	install in reverse order.

⚠

On vehicles with trunk lid auxiliary locking device, install actuators only with red shift rod mounting.

b) Coupé and cabriolet

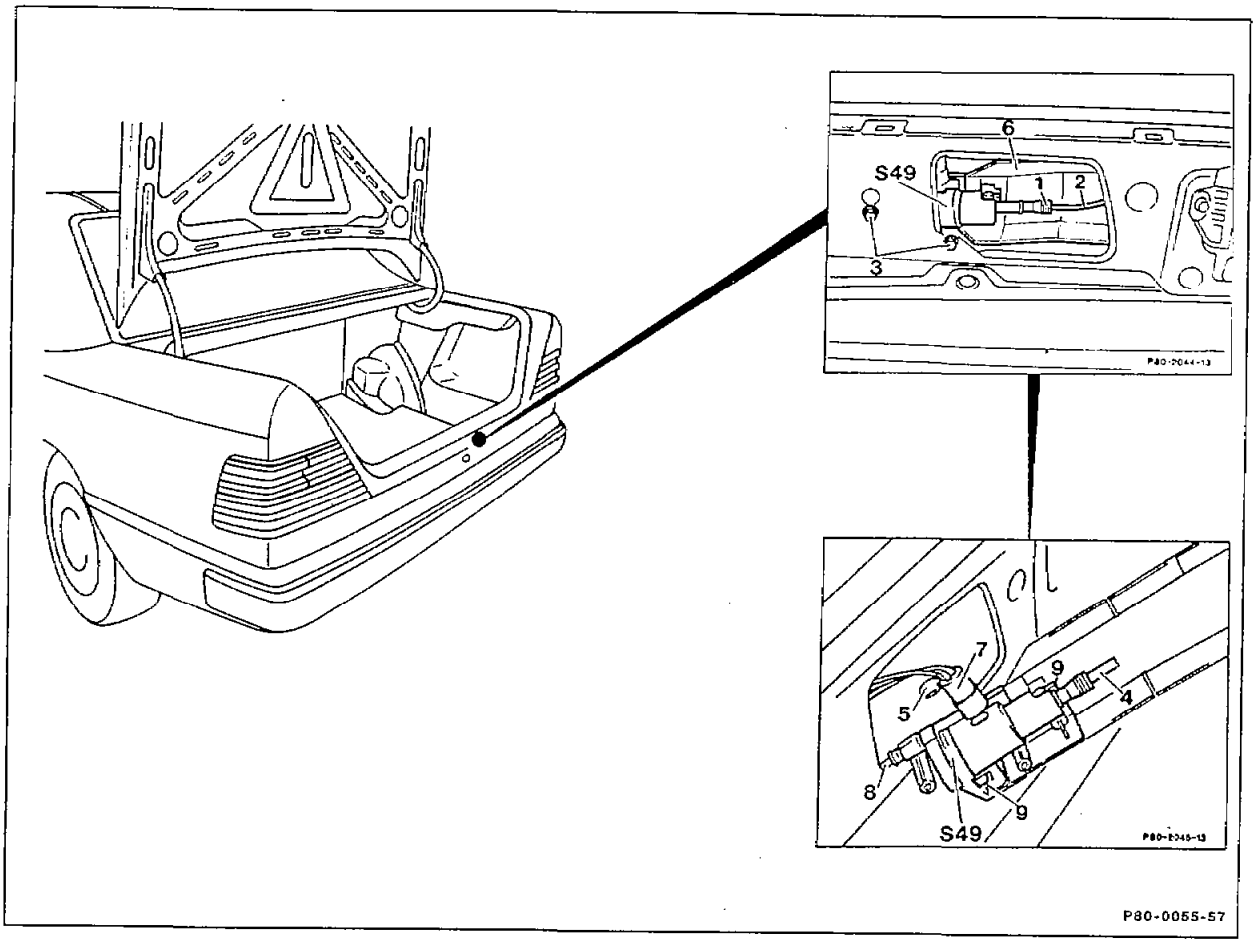

Trunk panelling at rear centre section	remove.
Sliding sleeve (1)	push back.
Shift rod (2)	press out.
Bolt (3)	slacken.
Actuator (S49)	detach.
Actuator (S49) with cover (6)	withdraw through opening in rear centre section.
Strain relief (5)	press away.
Electric lead (7)	disconnect.
Pneumatic line (8)	lever off from connection with open-end wrench (waf 7).
Electric or pneumatic function of actuator (S49)	check (80-112) or (80-116).

Actuator (S49), move into installation position	push sliding sleeve (1) back fully and withdraw shift rod mounting (4) as far as detent. Push shift rod (2) of trunk lid lock actuator (S49) up to stop away from actuator.
Actuator	install in reverse order.

⚠

On vehicles with trunk lid auxiliary locking device (coupé only), install actuators only with red shift rod mounting.

80-220 Removing and installing rear door actuator

Preceding operation:
Checking central locking system for leaks (80-120)

Operation no. of operation texts and work units
or standard texts and flat rates 80-0302, 80-0303

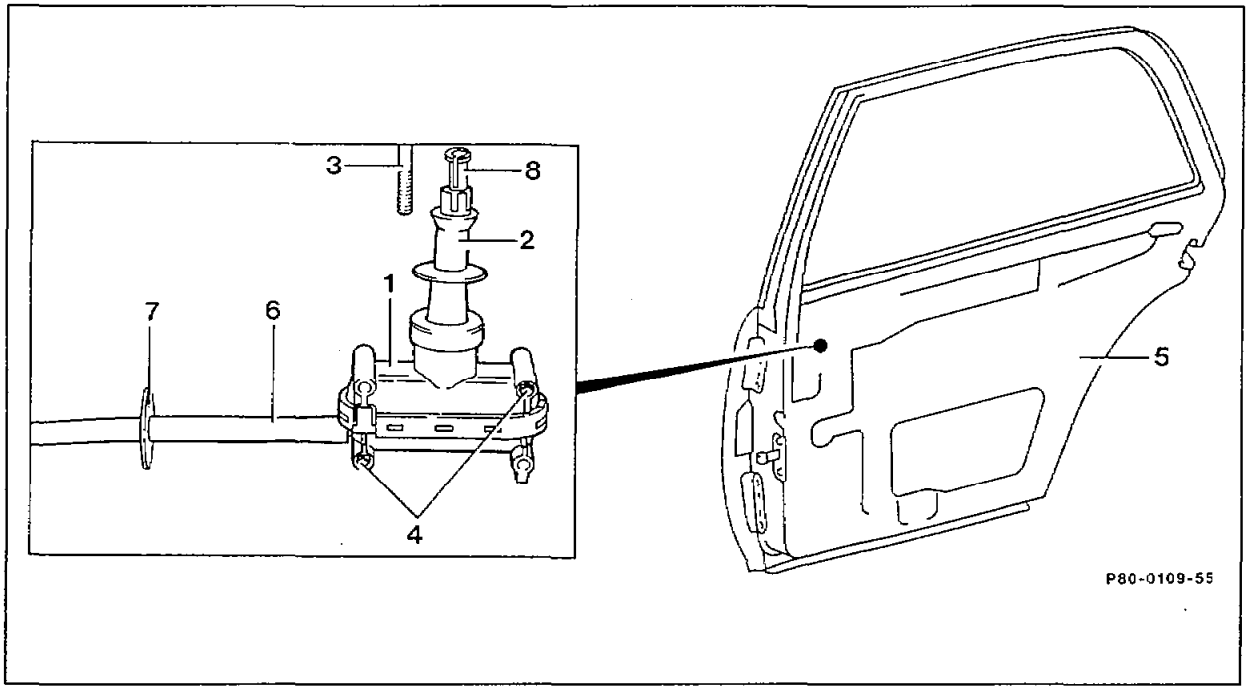

Door panelling (5)	remove.
Plastic cover	unclip, if necessary.
Sliding sleeve (2)	push back.
Shift rod (3)	press out.
Bolts (4)	slacken.
Actuator (1)	detach.
Connecting hose (6)	disconnect.
Pneumatic function of actuator (1)	check (80-116).
Actuator (1)	move into installation position. Push sliding sleeve (2) back fully and withdraw shift rod mounting (8) as far as detent.
Actuator (1)	install in reverse order.
Rubber disk (7)	push up to opening for protective hose in rear door.

80-230 Removing and installing fuel filler flap actuator

Preceding operation:
Checking central locking system for leaks (80-120)

Operation no. of operation texts and work units
or standard texts and flat rates 80-0306

A. Sedan on to approx. 04/87

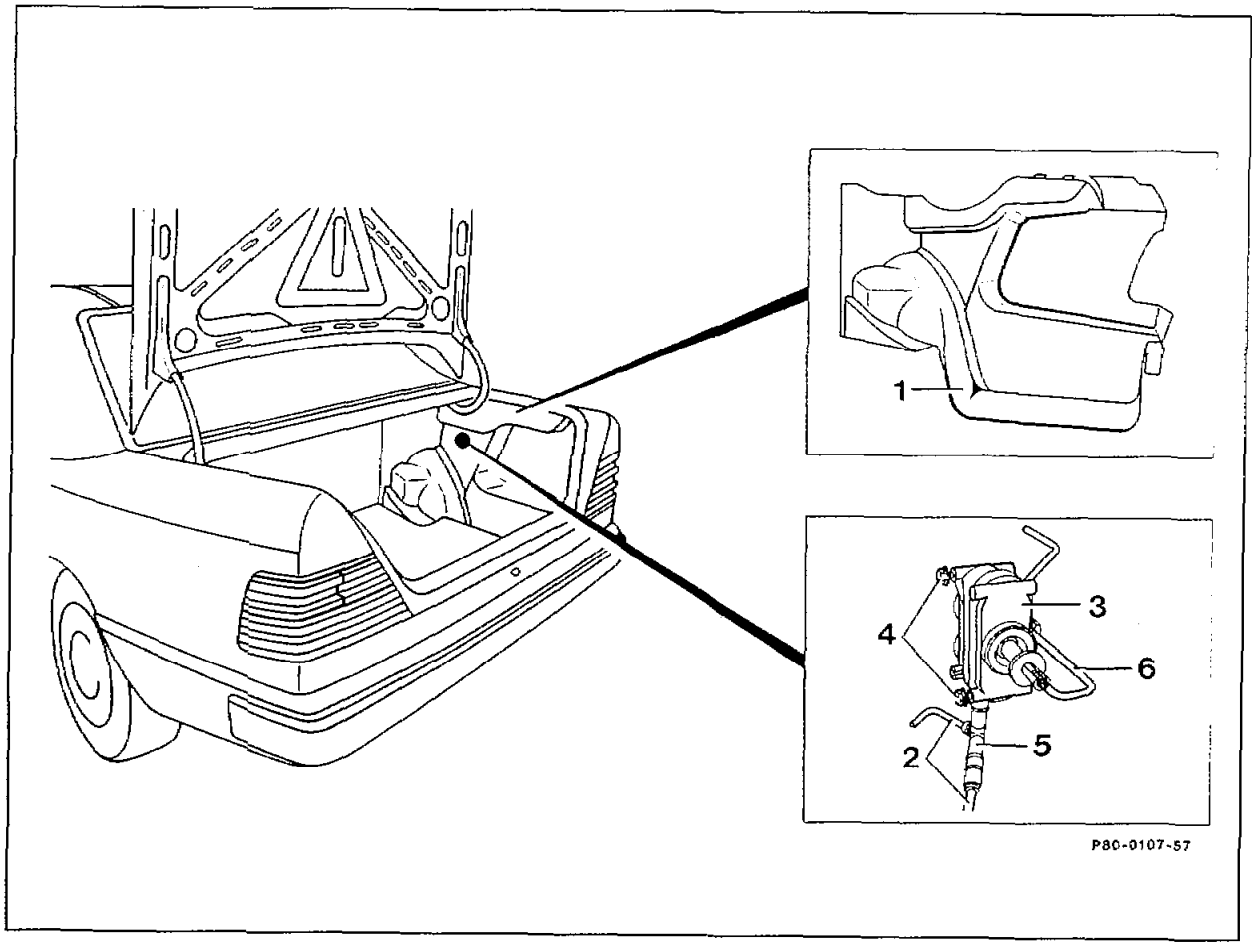

Panelling (1) in right of trunk	remove, install.
Pneumatic lines (2)	detach, fit on.
Bolts (4)	slacken, tighten.
Distributor (5)	examine for signs of damage.
Pneumatic function of actuator (3)	check (80-116).
Shift rod (6)	adjust until tip is at the same level as shift rod guide.

B. Sedan as of approx. 05/87 and coupé up to approx. 08/90

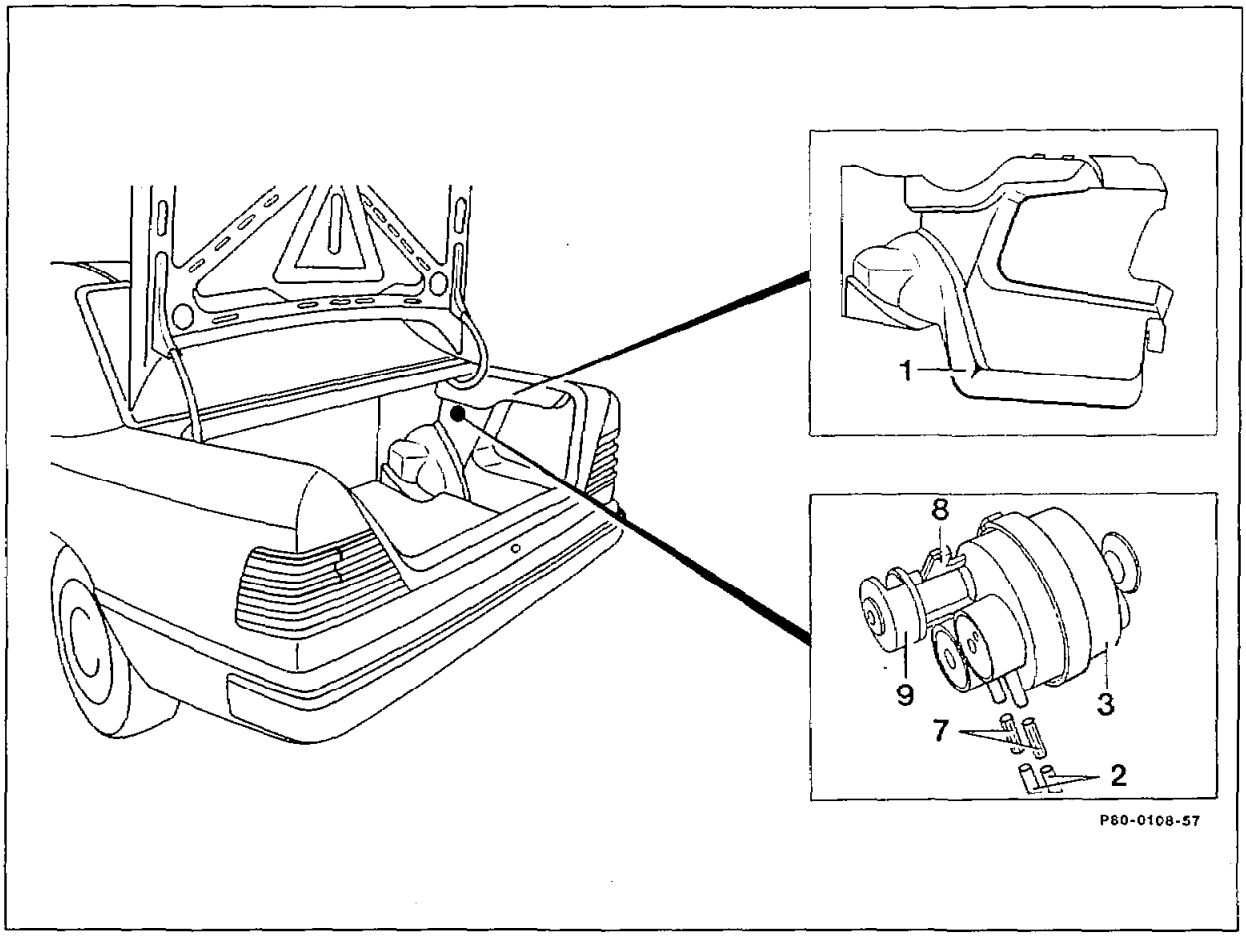

Panelling (1) in right of trunk	remove, install.
Pneumatic lines (2)	detach, fit on.
Connectors (7)	examine for signs of damage.
Fixing plate (8)	press away to remove.
Pneumatic function of actuator (3)	check (80-116).
Actuator (3)	engage in guide sleeve (9) for installing.

C. Sedan and coupé as of approx. 09/90, cabriolet from start of production

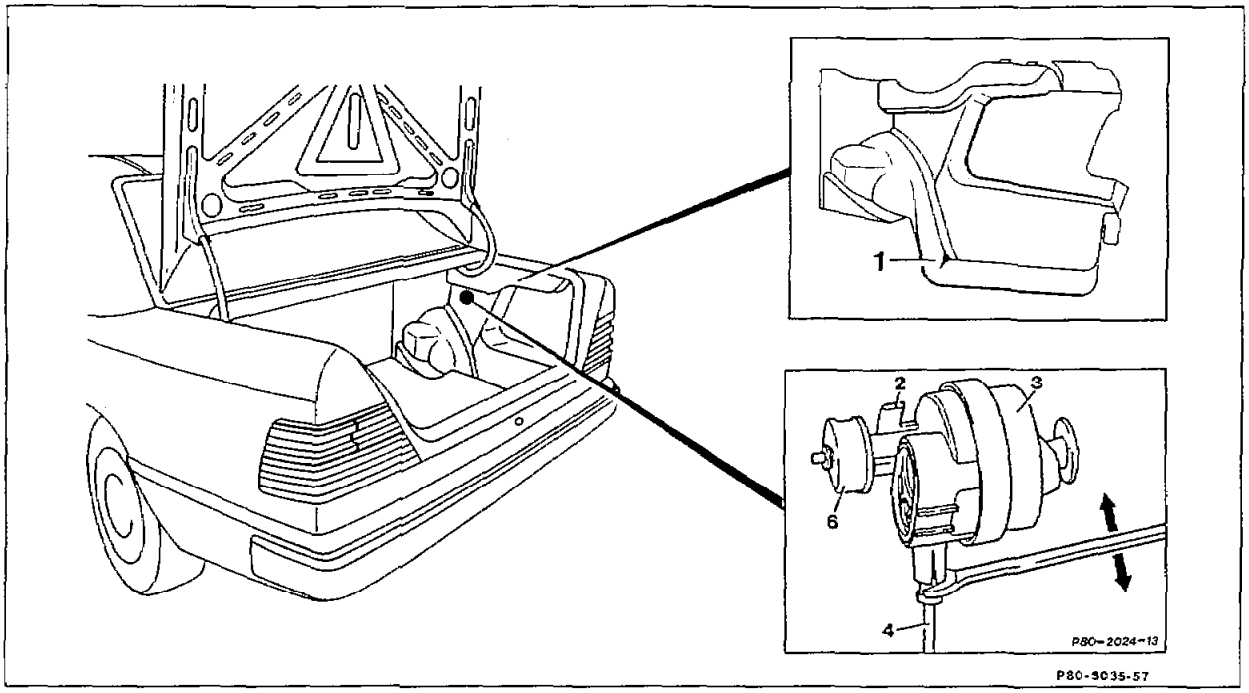

Panelling (1) in right of trunk	remove, install.
Fixing plate (2)	press away to remove.
Pneumatic line (4)	lever off using open-end wrench (width across flats 7).
Pneumatic operation of actuator (3)	check (80-116).
Pneumatic line	engage in actuator (3) to install.
Actuator (3)	engage in guide sleeve (6) to install.

D. Station wagon up to approx. 08/90

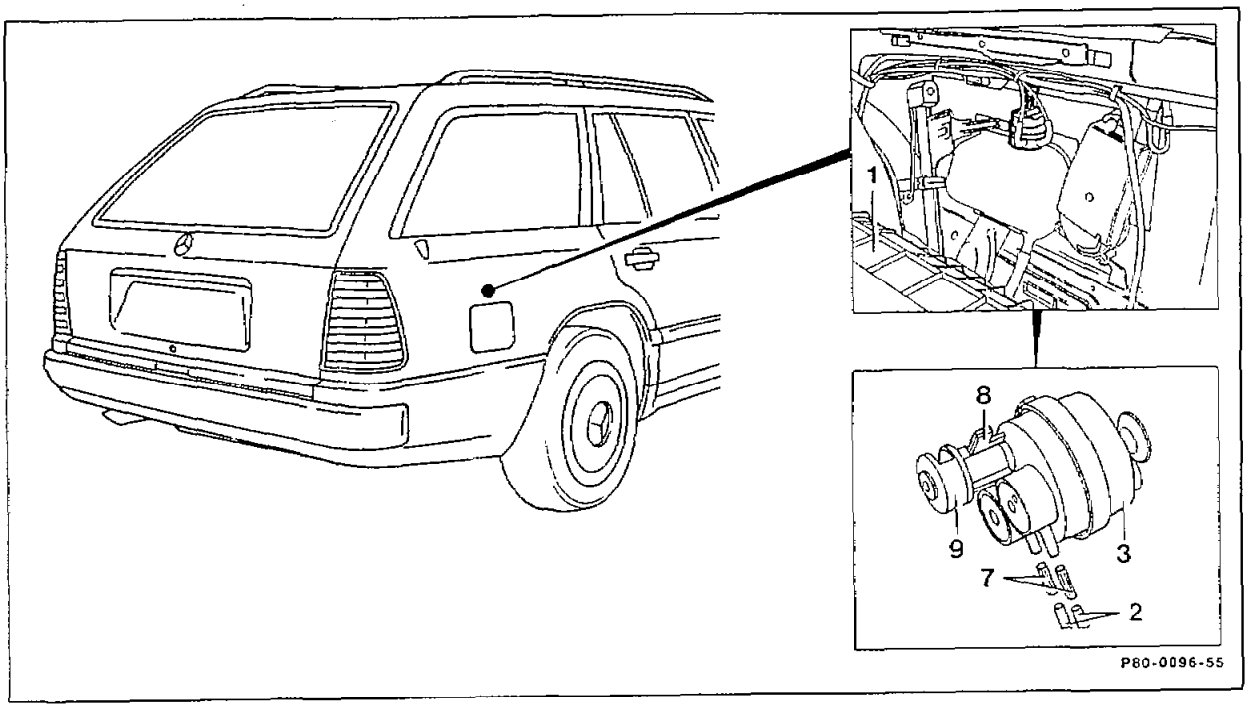

Cover (1) in right of baggage area	open, close.
Pneumatic lines (2)	detach, fit on.
Connectors (7)	examine for signs of damage.
Fixing plate (8)	press away to remove.
Pneumatic function of actuator (3)	check (80-116).
Actuator (3)	engage in guide sleeve to install.

E. Station wagon as of approx. 09/90

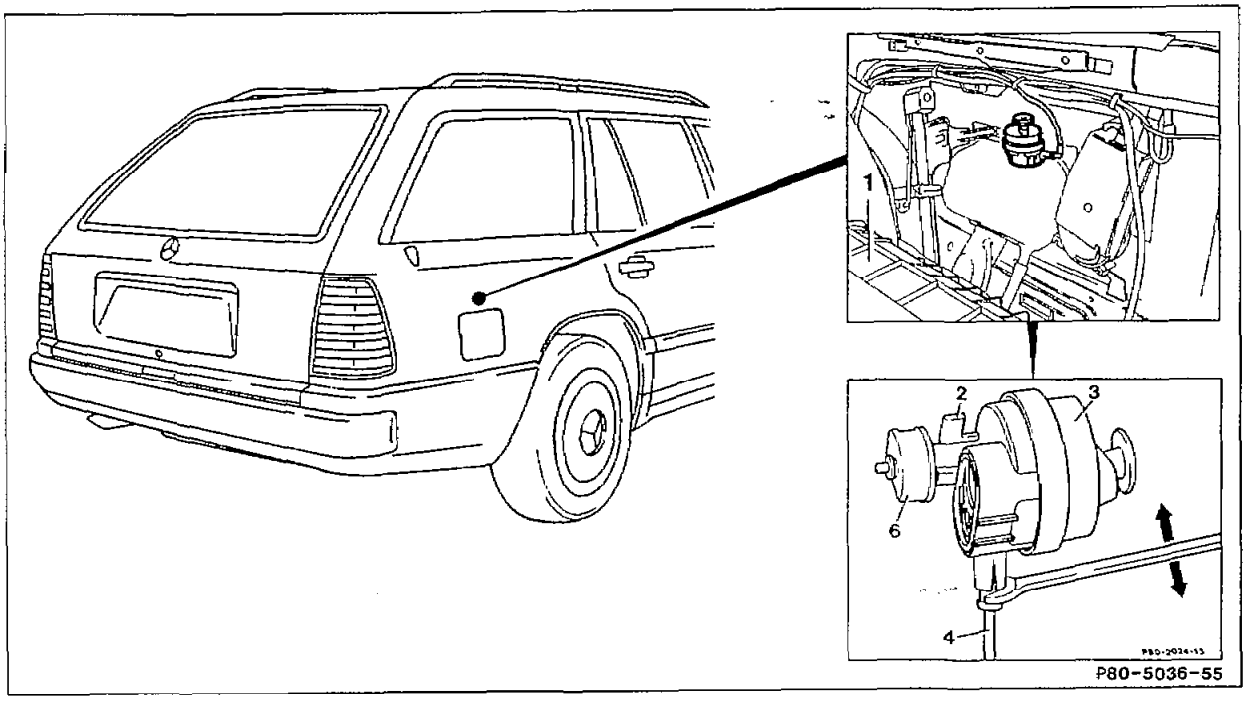

Cover (1) in right of loading area	open, close.
Fixing plate (2)	press away to remove.
Pneumatic line	lever off with open-end wrench (width across flats 7).
Pneumatic operation of actuator (3)	check (80-116).
Pneumatic line	engage in actuator to install.
Actuator (3)	engage in guide sleeve (6) to install.

80-270 Removing and installing supply pump (M14/1)

Preceding operation:
Check electrical function of central locking system (80-104)

Operation no. of operation texts and work units
or standard texts and flat rates 80-0030

A. Sedan, coupé and cabriolet

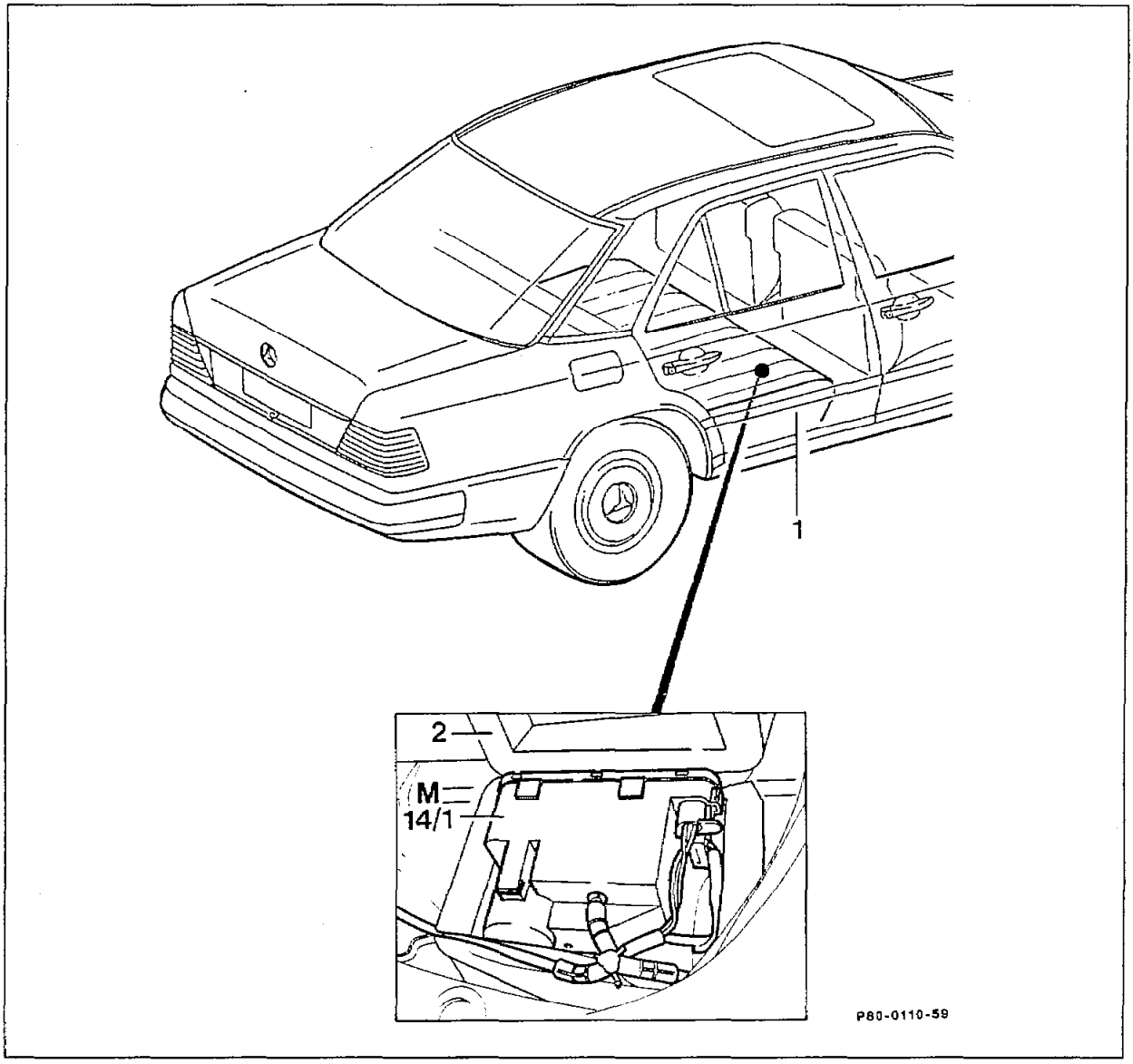

Rear seat squab (1)	.....	remove.
Foam cube (2)	.....	withdraw from recess and open.
Supply pump (M14/1)	.....	remove.

Pneumatic lines or electric leads	disconnect.
Electrical function of central locking system or pneumatic function of supply pump	check (80-104 or 80-108).
Supply pump (M14/1)	install in reverse order.

B. Station Wagon

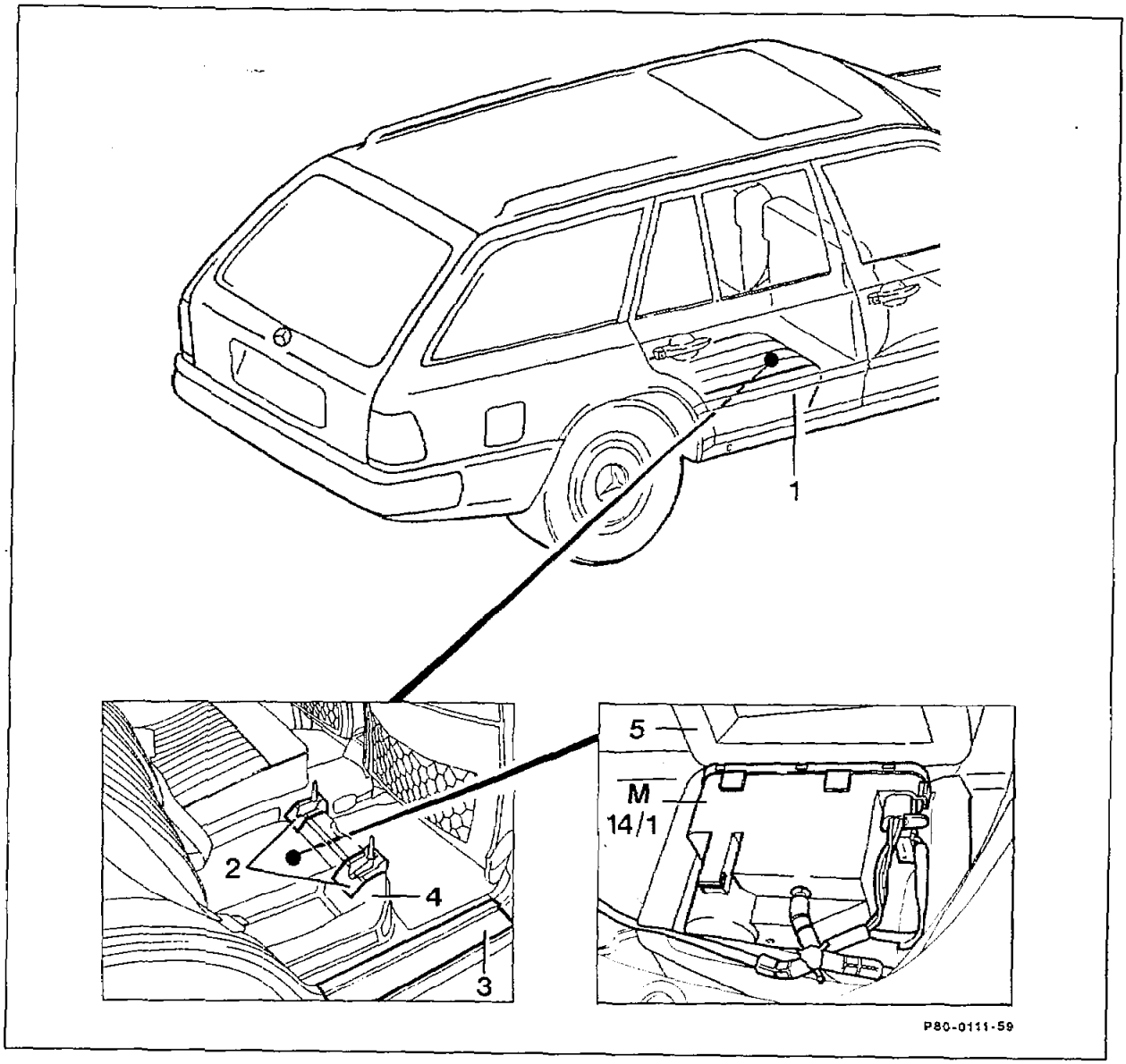

Right rear seat squab (1)	remove.
Cover (2)	*remove.*
Cover at entry (3)	remove.
Clips for fixing carpet below cover	press out.
Rear carpeting (4) below panelling at wheelhouse	pull forward and carefully fold in toward centre of vehicle.

Foam cube (5)	withdraw from recess and open.
Supply pump (M14/1)	remove.
Pneumatic lines or electric leads	*disconnect.*
Electrical function of central locking system or pneumatic function of supply pump	check (80-104 or 80-108).
Supply pump	install in reverse order.

A. Sedan up to approx. 04/85

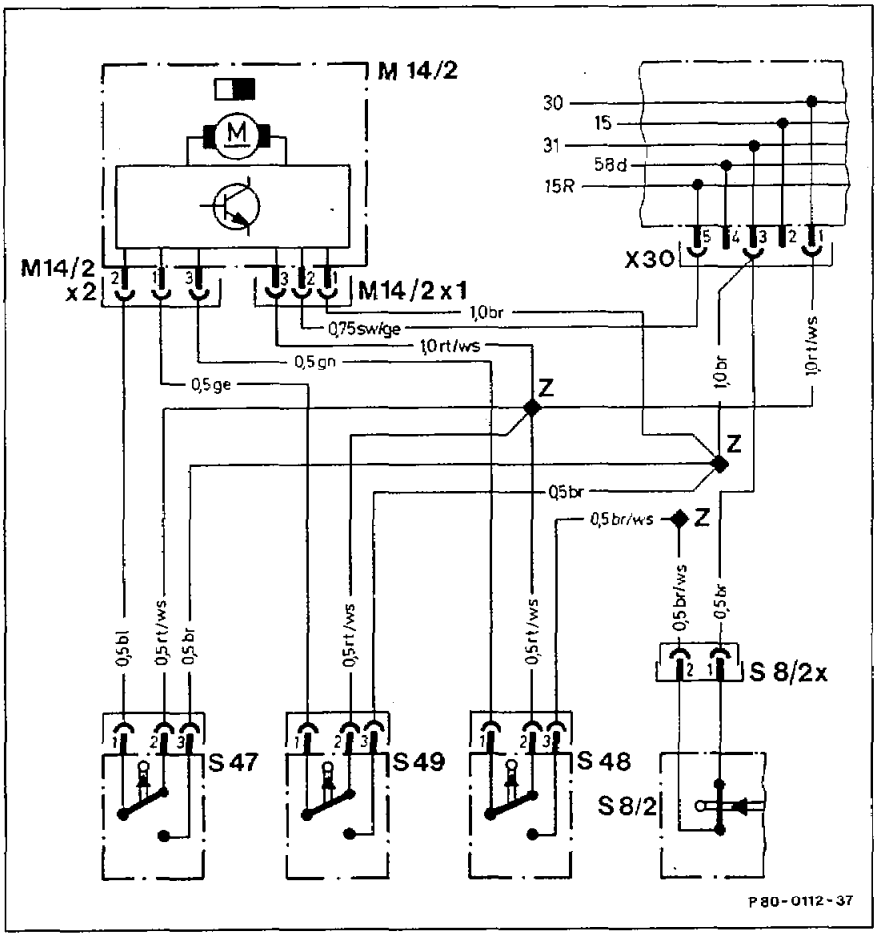

M14/2	Supply pump, central locking system with front orthopedic backrest	S8/2x	Connector, warning buzzer contact, lighting/central locking system
M14/2x1	Connector, power supply, supply pump central locking system with front orthopedic backrest	S47	Left front door actuator (RHD S48)
M14/2x2	Connector, control line, supply pump central locking system with front orthopedic backrest (anti-theft alarm harness may be connected into circuit)	S48	Right front door actuator (RHD S47)
		S49	Trunk lid lock actuator
		X30	Connector plug, optional electrical equipment
S8/2	Warning buzzer contact, lighting/central locking system	Z	Terminal sleeve, soldered connector in harness

Note

Black/yellow cable from M14/2x1 contact 2 to X30 contact 5 is installed only if orthopedic backrest fitted.

B. Station Wagon from approx. 05/85 to approx. 03/86

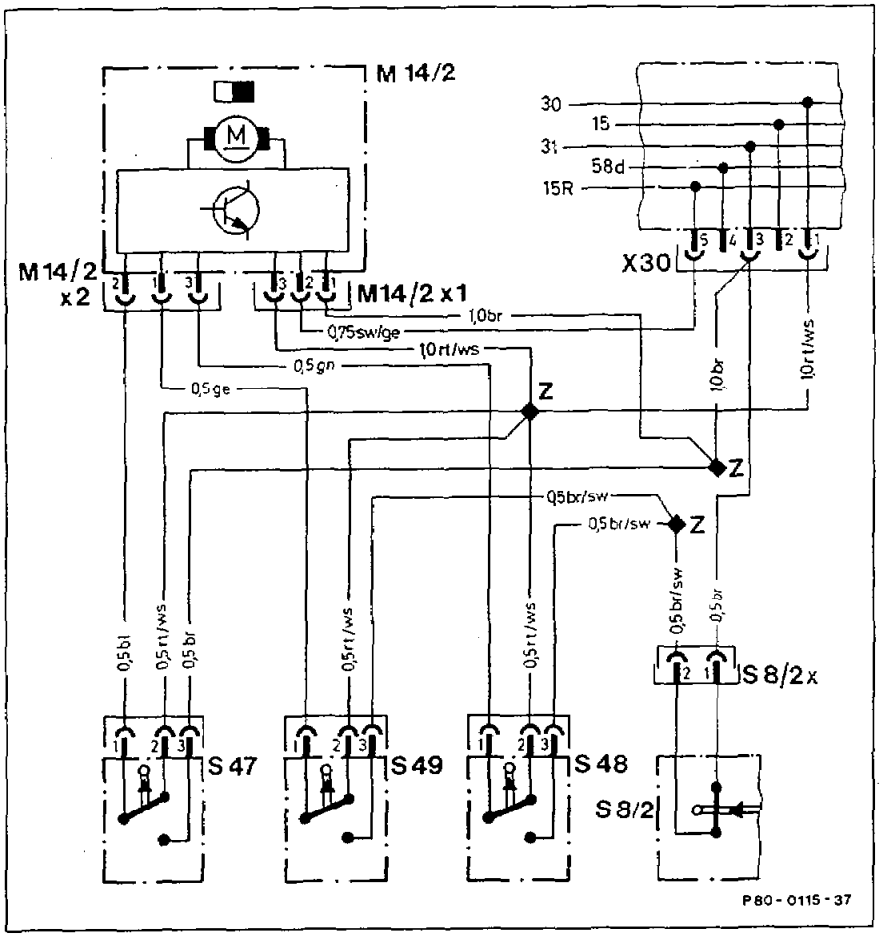

M14/2	Supply pump, central locking system with front orthopedic backrest	S8/2x	Connector, warning buzzer contact, lighting/central locking system
M14/2x1	Connector, power supply, supply pump central locking system with front orthopedic backrest	S47	Left front door actuator (RHD S48)
M14/2x2	Connector, control line, supply pump central locking system with front orthopedic backrest (anti-theft alarm harness may be connected into circuit)	S48	Right front door actuator (RHD S47)
		S49	Trunk lid lock actuator
		X30	Connector plug, optional electrical equipment
S8/2	Warning buzzer contact, lighting/central locking system	Z	Terminal sleeve, soldered connector in harness

Note

Black/yellow cable from M14/2x1 contact 2 to X30 contact 5 is installed only if orthopedic backrest fitted.

C. Sedan from approx. 04/86

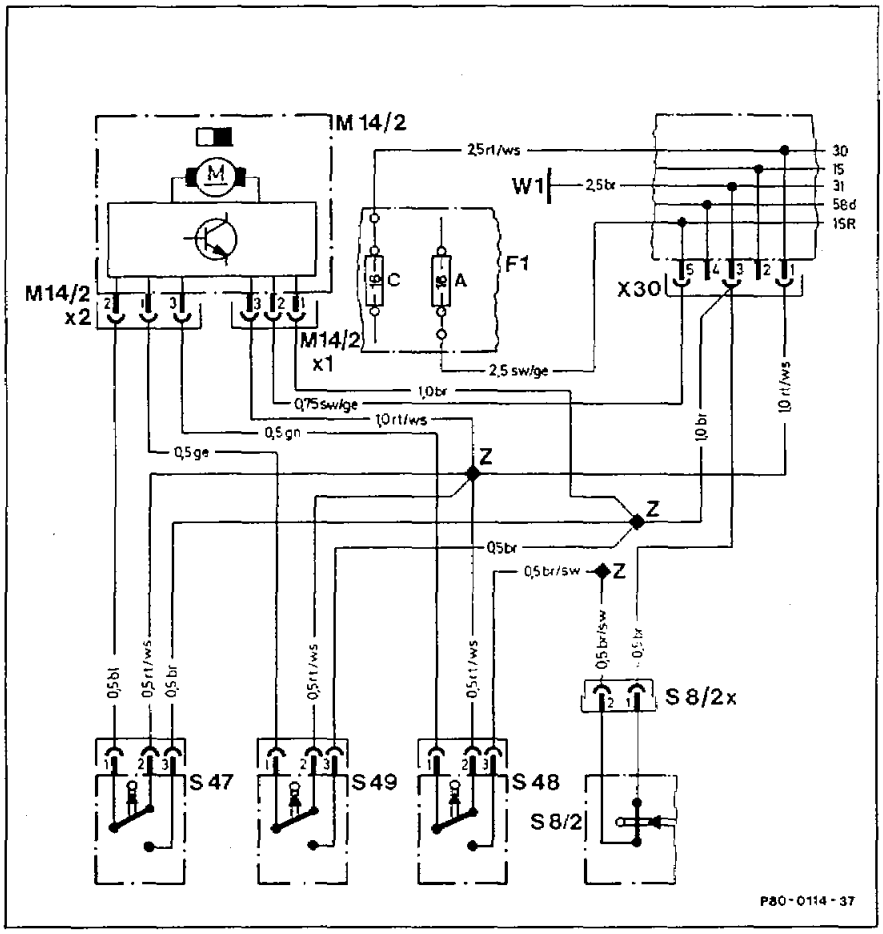

F1	Fuse and relay box Fuse A, Terminal 15R Fuse C, Terminal 30
M14/2	Supply pump, central locking system with front orthopedic backrest
M14/2x1	Connector, power supply, supply pump central locking system with front orthopedic backrest
M14/2x2	Connector, control line, supply pump central locking system with front orthopedic backrest (anti-theft alarm harness may be connected into circuit)
S8/2	Warning buzzer contact, lighting/central locking system
S8/2x	Connector, warning buzzer contact, lighting/central locking system
S47	Left front door actuator (RHD S48)
S48	Right front door actuator (RHD S47)
S49	Trunk lid lock actuator
W1	Main ground (behind instrument cluster)
X30	Connector plug, optional electrical equipment
Z	Terminal sleeve, soldered connector in harness

Note

Black/yellow cable from M14/2x1 contact 2 to X30 contact 5 is installed only if orthopedic backrest fitted.

D. Station Wagon

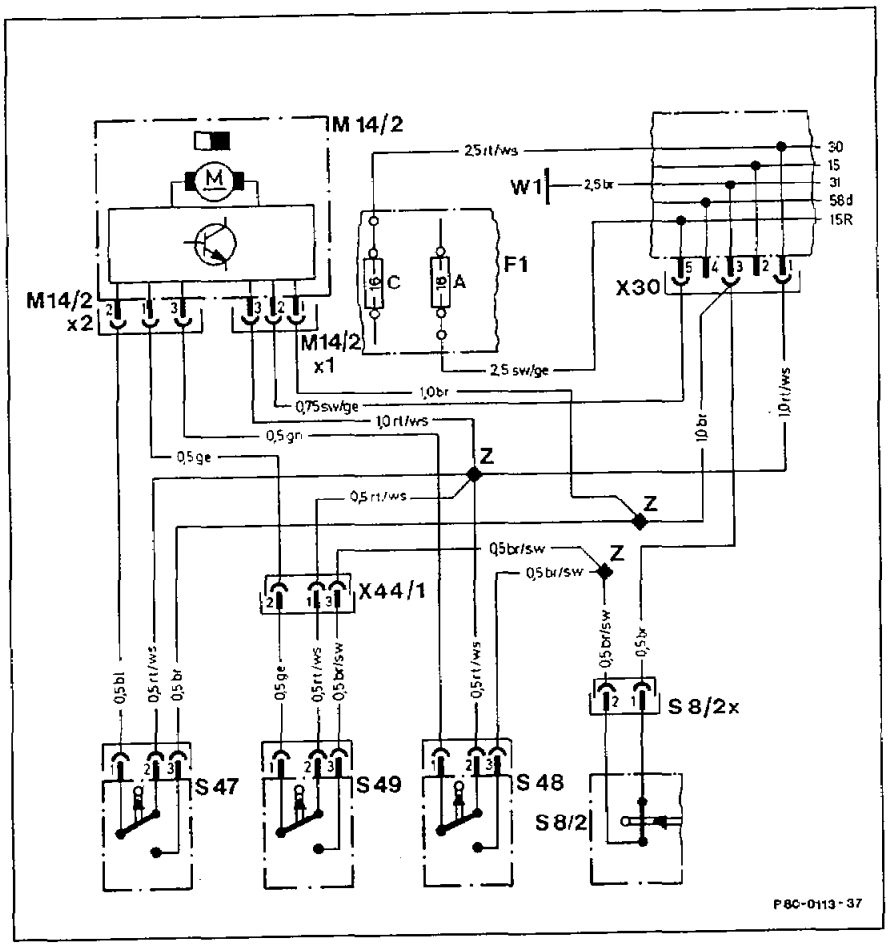

F1	Fuse and relay box Fuse A, Terminal 15R Fuse C, Terminal 30
M14/2	Supply pump, central locking system with front orthopedic backrest
M14/2x1	Connector, power supply, supply pump central locking system with front orthopedic backrest
M14/2x2	Connector, control line, supply pump central locking system with front orthopedic backrest *(anti-theft alarm harness may be connected into circuit)*
S8/2	Warning buzzer contact, lighting/central locking system
S8/2x	Connector, warning buzzer contact, lighting/central locking system
S47	Left front door actuator (RHD S48)
S48	Right front door actuator (RHD S47)
S49	Trunk lid lock actuator
W1	Main ground (behind instrument cluster)
X30	Connector plug, optional electrical equipment
X44/1	Connector central locking system/trunk lid lock
Z	Terminal sleeve, soldered connector in harness

Note

Black/yellow cable from M14/2x1 contact 2 to X30 contact 5 is installed only if orthopedic backrest fitted.

E. Coupé and cabriolet

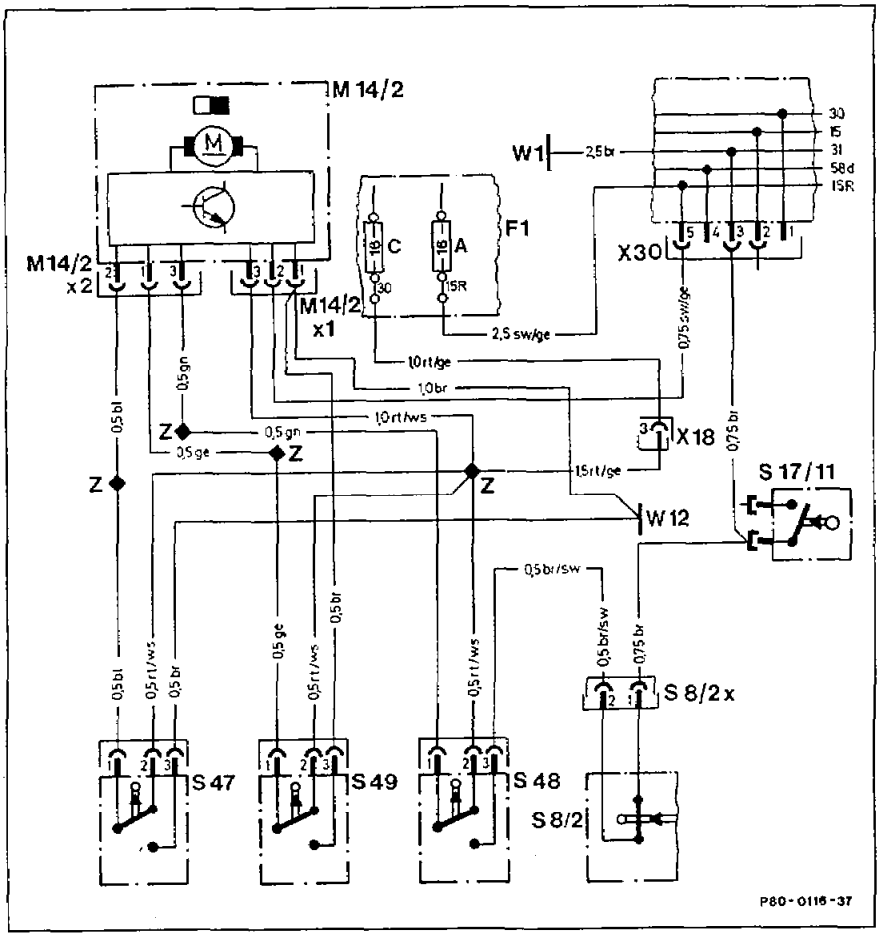

F1	Fuse and relay box Fuse A, Terminal 15R Fuse C, Terminal 30
M14/2	Supply pump, central locking system with front orthopedic backrest
M14/2x1	Connector, power supply, supply pump central locking system with front orthopedic backrest
M14/2x2	Connector, control line, supply pump central locking system with front orthopedic backrest *(anti-theft alarm harness may be connected into circuit*
S8/2	Warning buzzer contact, lighting/central locking system
S8/2x	Connector, warning buzzer contact, lighting/central locking system
S17/11	Left door switch, seat belt extender, entry lamp (RHD S17/12)
S47	Left front door actuator (RHD S48)
S48	Right front door actuator (RHD S47)
S49	Trunk lid lock actuator
W1	Main ground (behind instrument cluster)
W12	Ground, centre console
X18	Connector, interior/tail lamp harness
X30	Connector plug, optional electrical equipment
Z	Terminal sleeve, soldered connector in harness

Note

Black/yellow cable from M14/2x1 contact 2 to X30 contact 5 is installed only if orthopedic backrest fitted.

A. LHD sedan

1st version up to approx. 08/90

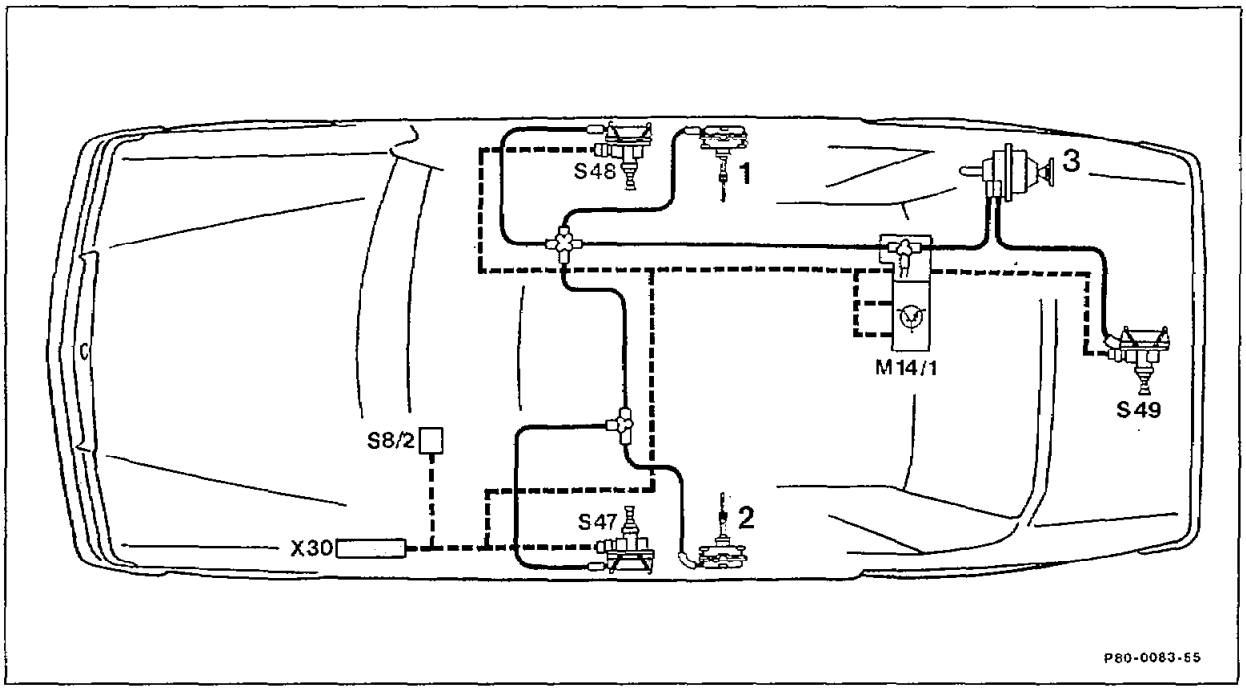

1	Right rear door actuator	S47	Left front door actuator
2	Left rear door actuator	S48	Right front door actuator
3	Fuel filler flap actuator	S49	Trunk lid lock actuator
M14/1	Supply pump, central locking system	X30	Connector block, optional electrical equipment
S8/2	Warning buzzer contact, lighting/central locking system	- - - -	Electric lead
		——	Pneumatic line

2nd version

Production breakpoint: Vehicle ident. end no.

as of	up to
1A 861403	1A 866954
1F 097724	1F 098305

and across the range from approx. 09/90

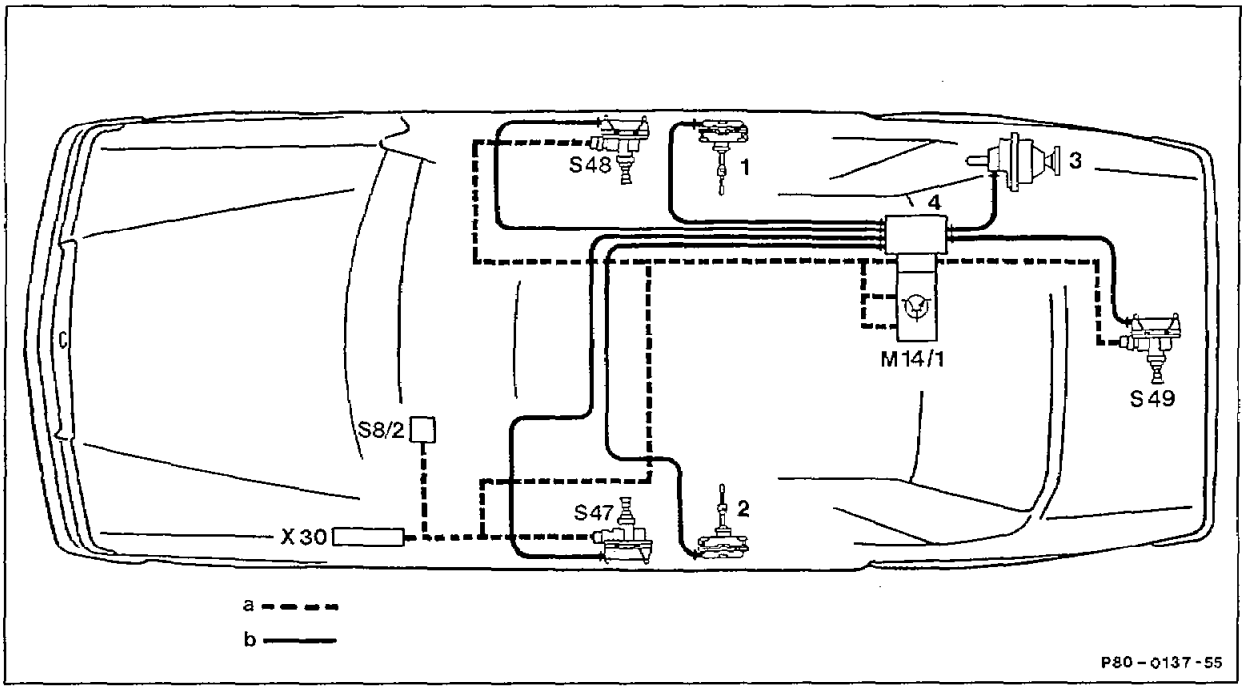

1	Right rear door actuator
2	Left rear door actuator
3	Fuel filler flap actuator
4	6-way distributor
M14/1	Supply pump, central locking system
S47	Left front door actuator
S48	Right front door actuator
S49	Trunk lid lock actuator
S8/2	Warning buzzer contact, exterior lamps/central locking system (ZV)
X30	Plug connection block for optional equipment
- - - -	Electric lead
——	Pneumatic line

3rd version for (D) only as of 03/94 and vehicles with code 885

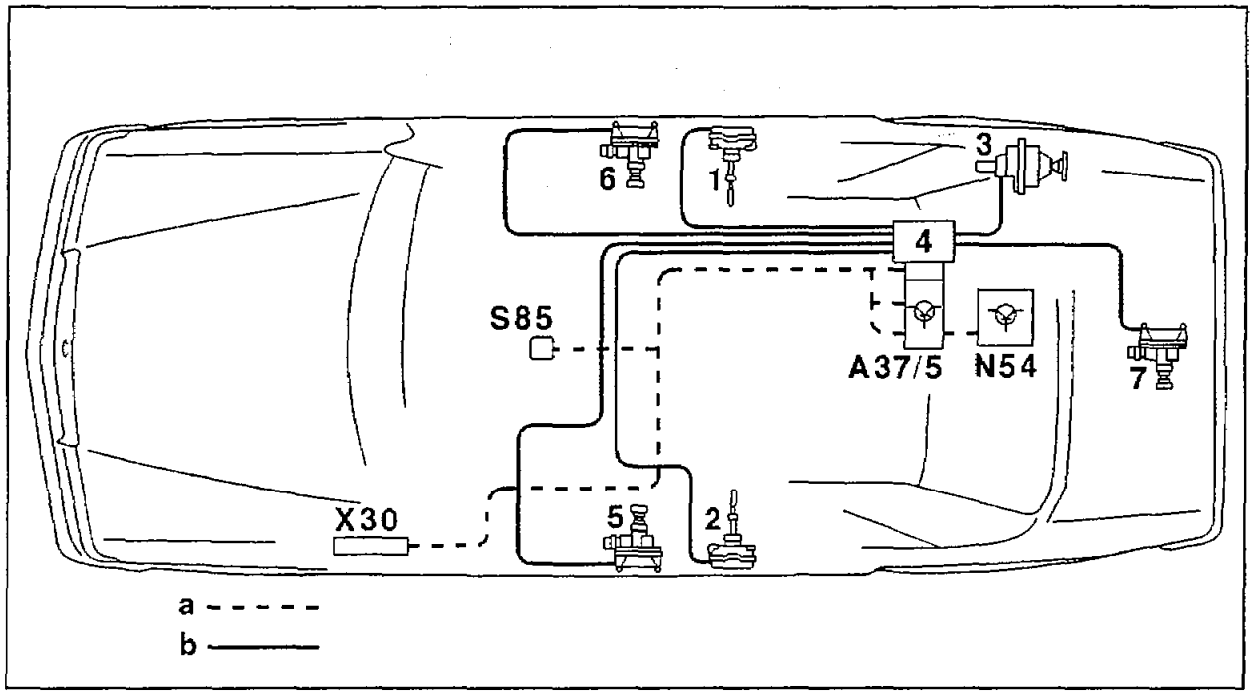

P80-5234-55

1	Right rear door actuator	A37/5	Pneumatic control unit
2	Left rear door actuator	N54	Infrared remote control unit for central locking system
3	Tank flap actuator		
4	*Distribution plug with 6 connections*	*S85*	*Interior central locking system switch*
5	Left front door actuator	X30	Plug connection block for optional equipment
6	Right front door actuator	- - - -	Pneumatic line
7	Trunk lid actuator	——	Electric lead

B. RHD sedan

1st version up to approx. 08/90

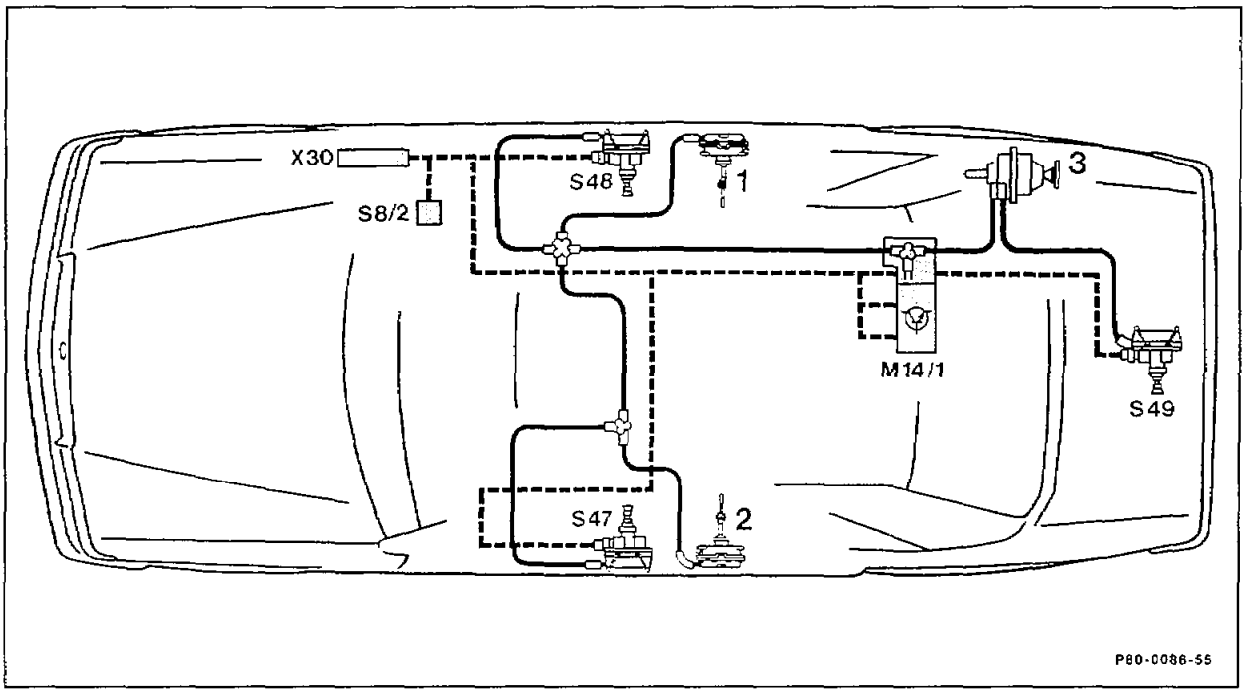

1	Right rear door actuator	S47	Left front door actuator
2	Left rear door actuator	S48	Right front door actuator
3	Fuel filler flap actuator	S49	Trunk lid lock actuator
M14/1	*Supply pump, central locking system*	X30	*Connector block, optional electrical equipment*
S8/2	Warning buzzer contact, lighting/central locking system	- - - -	Electrical lead
		——	Pneumatic line

2nd version as of approx. 09/90

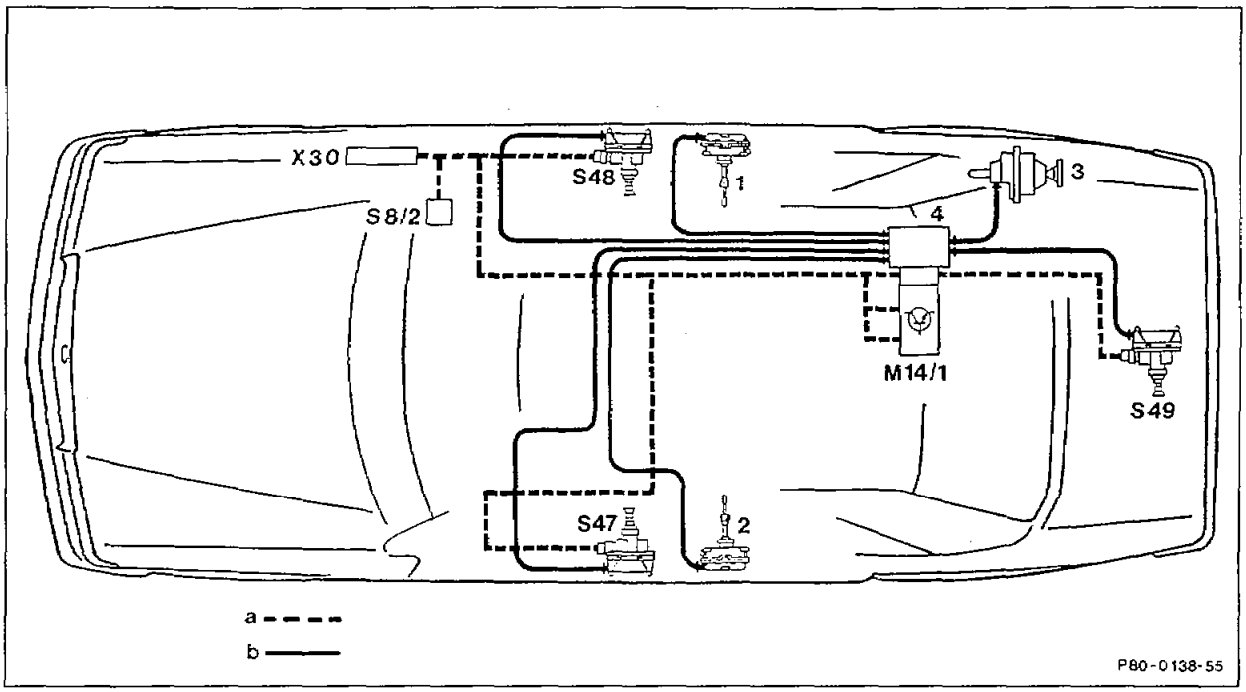

1	Right rear door actuator
2	Left rear door actuator
3	*Fuel filler flap actuator*
4	6-way distributor
M14/1	Supply pump, central locking system
S47	Left front door actuator
S48	Right front door actuator
S49	Trunk lid lock actuator
S8/2	Warning buzzer contact, exterior lamps/central locking system (ZV)
X30	Plug connection block for optional equipment
- - - -	*Electric lead*
——	Pneumatic line

3rd version for (D) only as of 03/94 and vehicles with code 885

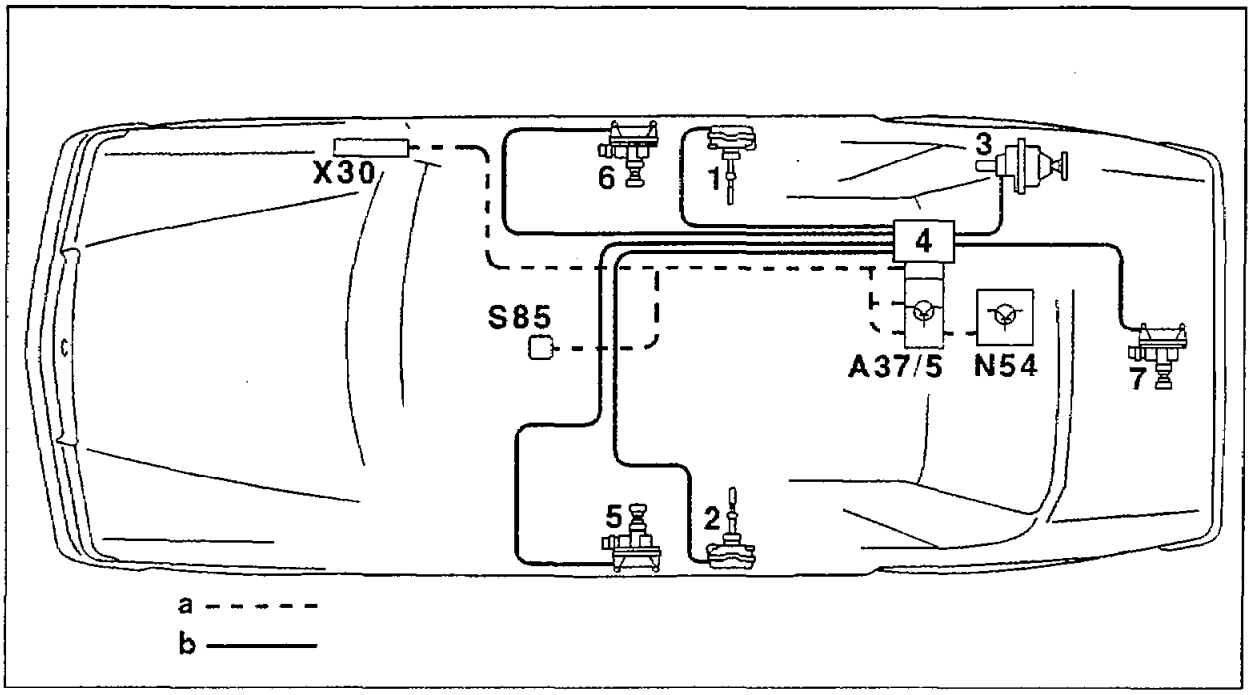

P80-5235-55

1	Right rear door actuator	A37/5	Pneumatic control unit
2	Left rear door actuator	N54	Infrared remote control unit for central locking system
3	Tank flap actuator		
4	Distribution plug with 6 connections	S85	Interior central locking system switch
5	Left front door actuator	X30	Plug connection block for optional equipment
6	Right front door actuator	- - - -	Pneumatic line
7	Trunk lid actuator	——	Electric lead

C. LHD T-models

1st version up to approx. 01/86

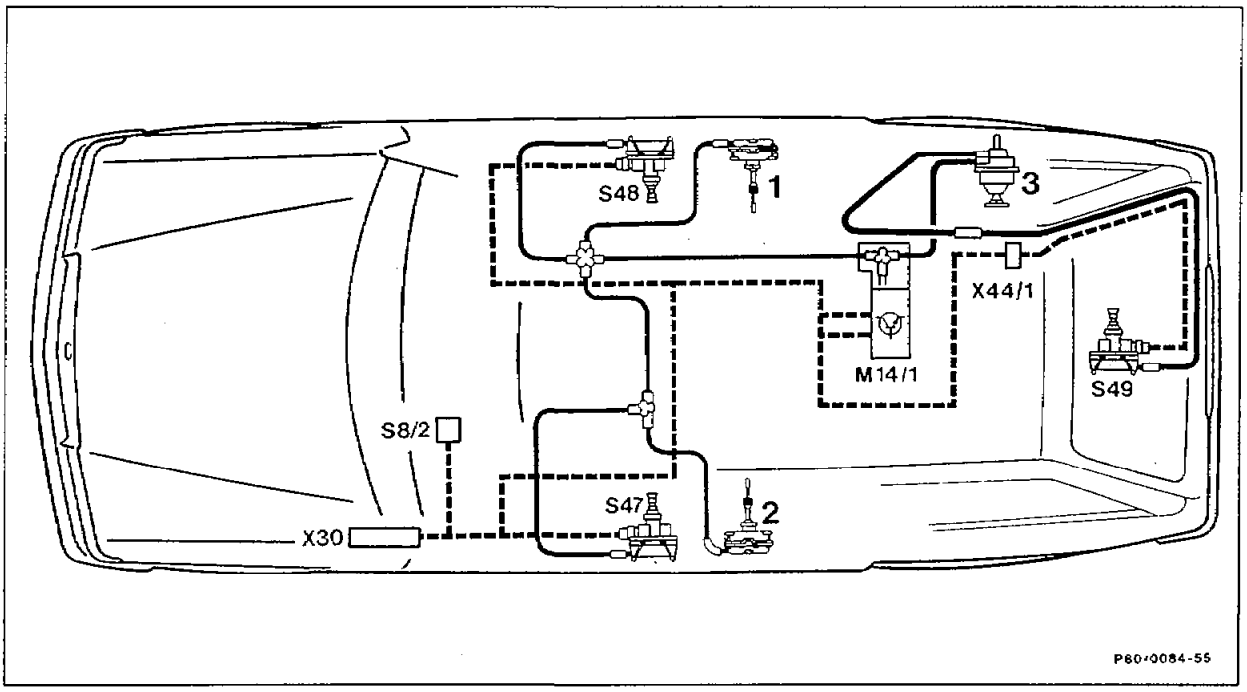

1	Right rear door actuator
2	Left rear door actuator
3	Fuel filler flap actuator
4	6-point distributor
M14/1	Supply pump, central locking system
S8/2	Warning buzzer contact, lighting/central locking system
S47	Left front door actuator
S48	Right front door actuator
S49	Trunk lid lock actuator
X30	Connector block, optional electrical equipment
X44/1	Connector central locking system/tailgate
- - - -	Electrical lead
——	Pneumatic line

2nd version from approx. 02/86 to approx. 08/90

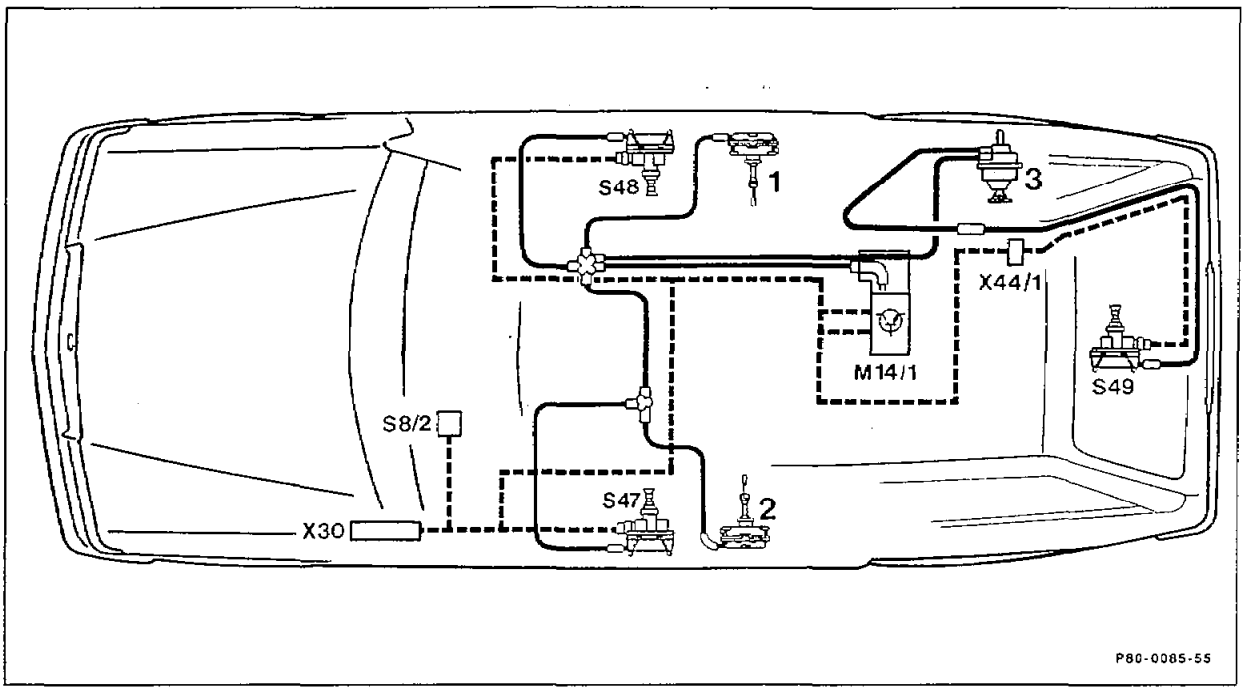

1	Right rear door actuator	S47	Left front door actuator
2	Left rear door actuator	S48	Right front door actuator
3	Fuel filler flap actuator	S49	Tailgate actuator
M14/1	Supply pump, central locking system	X30	Connector block, lighting/central locking system
S8/2	Warning buzzer contact, lighting/central locking system	X44/1	Connector central locking system/tailgate
		- - - -	Electric lead
		——	Pneumatic line

3rd version as of approx. 09/90

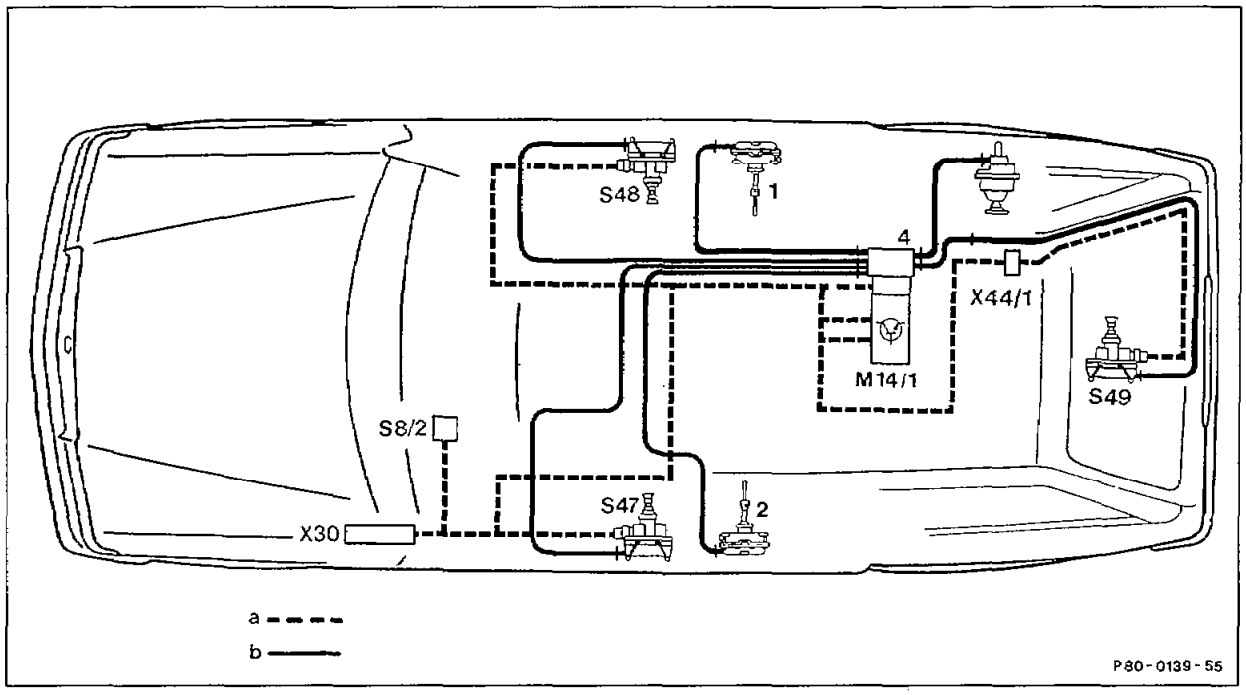

1	Right rear door actuator	S47	Left front door actuator
2	Left rear door actuator	S48	Right front door actuator
3	Fuel filler flap actuator	S49	Trunk lid lock actuator
M14/1	Supply pump, central locking system	X30	Connector block, optional electrical equipment
S8/2	Warning buzzer contact, lighting/central locking system	X44/1	Connector central locking system/tailgate
		- - - -	Electric lead
		——	Pneumatic line

4th version for (D) only as of 03/94 and vehicles with code 885

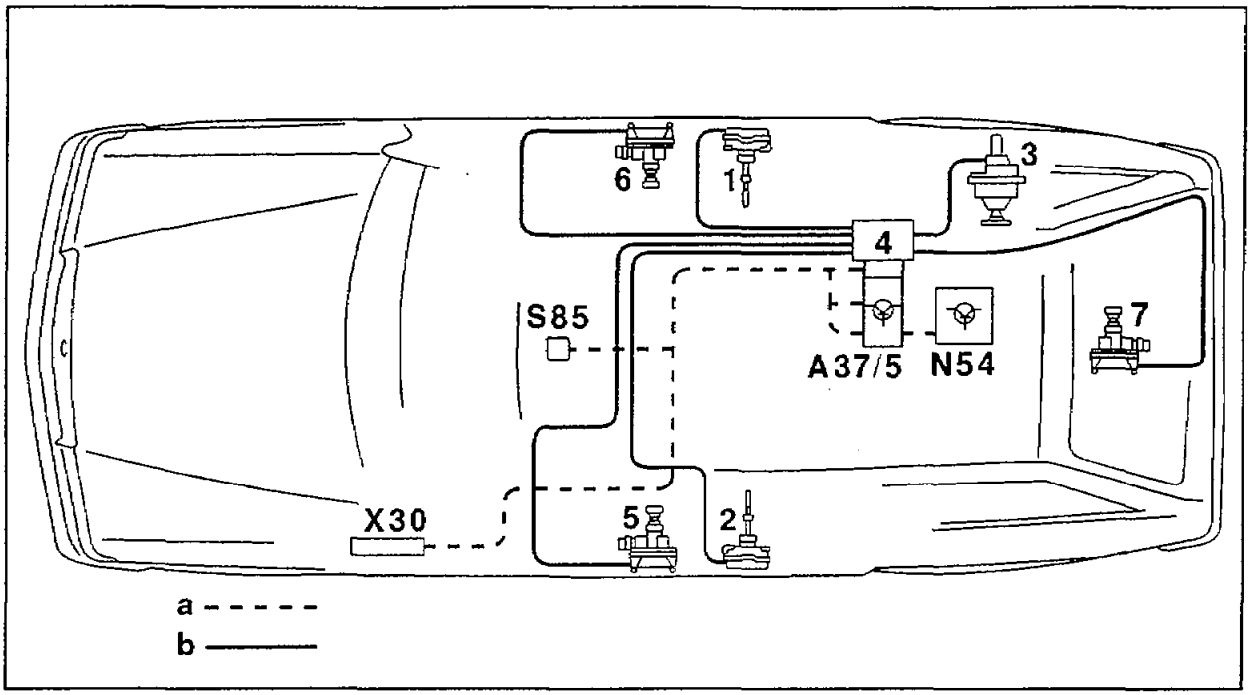

P80-5236-55

1	Right rear door actuator	A37/5	Pneumatic control unit
2	Left rear door actuator	N54	Infrared remote control unit for central locking system
3	Tank flap actuator		
4	Distribution plug with 6 connections	S85	Interior central locking system switch
5	Left front door actuator	X30	Plug connection block for optional equipment
6	Right front door actuator	- - - -	Pneumatic line
7	Trunk lid actuator	——	Electric lead

D. RHD T-models

1st version up to approx. 08/90

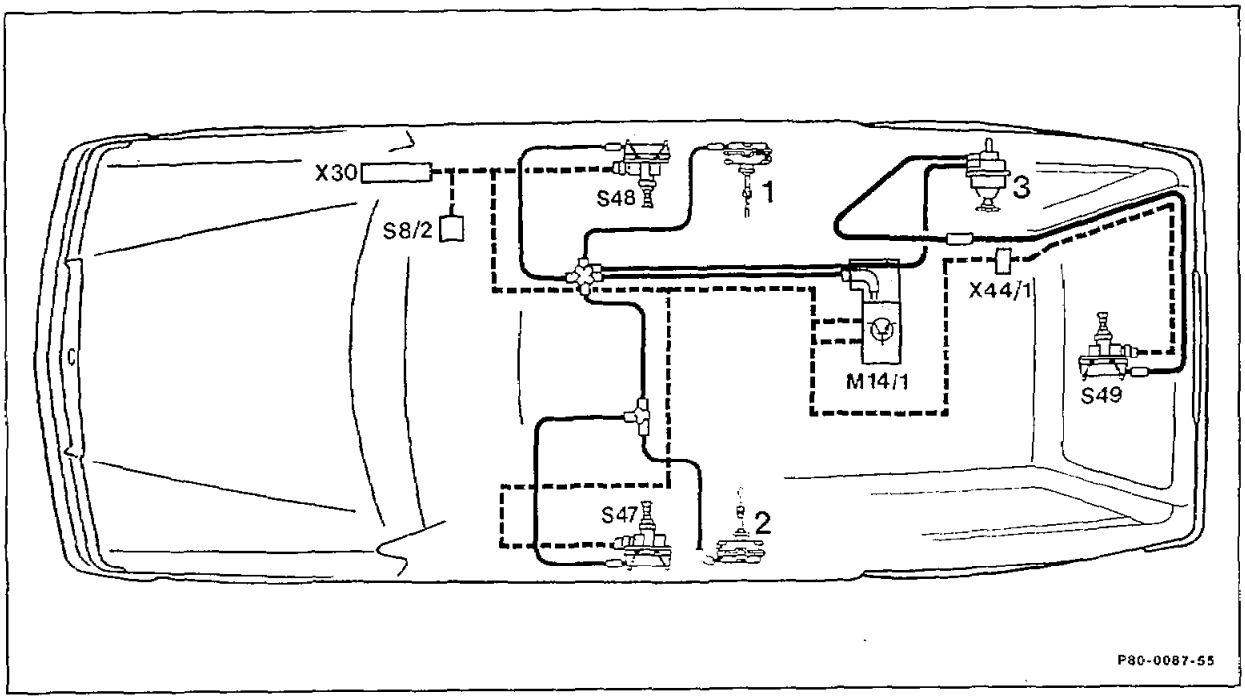

1	Right rear door actuator	S47	Left front door actuator
2	Left rear door actuator	S48	Right front door actuator
3	Fuel filler flap actuator	S49	Trunk lid lock actuator
M14/1	Supply pump, central locking system	X30	Connector block, optional electrical equipment
S8/2	Warning buzzer contact, lighting/central locking system	X44/1	Connector central locking system/tailgate
		- - - -	Electric lead
		——	Pneumatic line

2nd version as of approx. 09/90

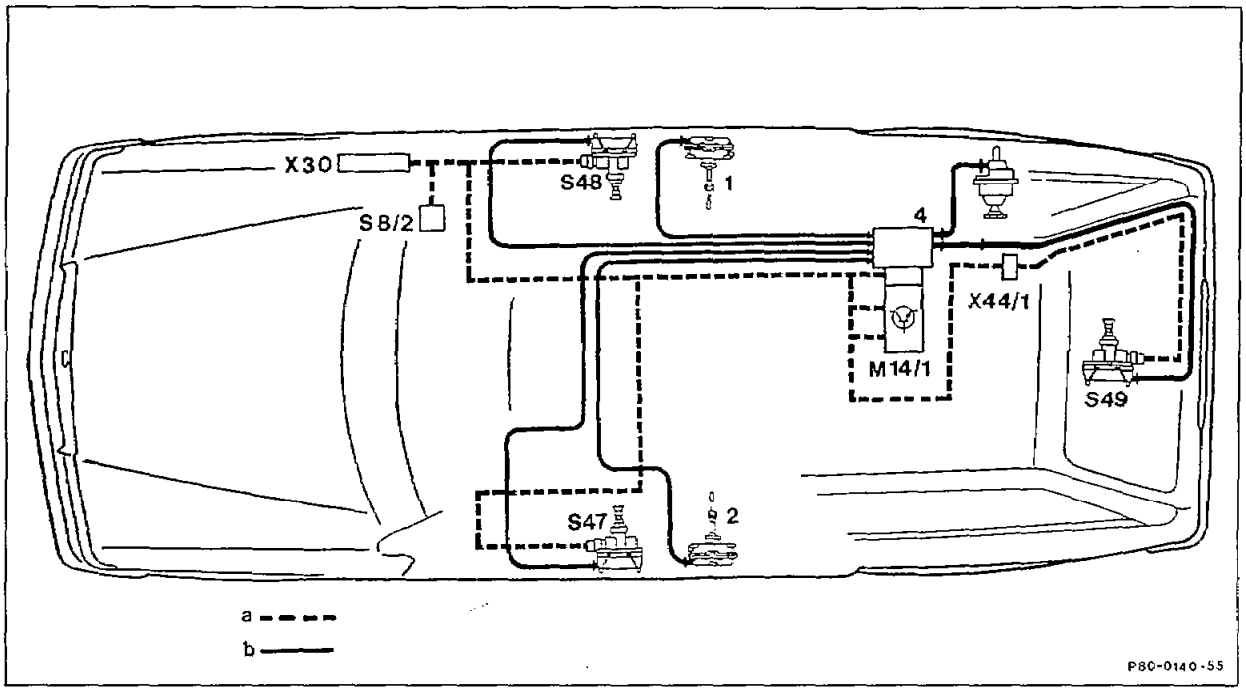

1	Right rear door actuator
2	Left rear door actuator
3	Fuel filler flap actuator
4	6-way distributor
M14/1	Supply pump, central locking system
S8/2	Warning buzzer contact, exterior lamps/central locking system (ZV)
S47	Left front door actuator
S48	Right front door actuator
S49	Trunk lid lock actuator
X30	Plug connection block for optional equipment
X44/1	Connection, central locking system (ZV) (trunk lock)
- - - -	Electric lead
——	Pneumatic line

3rd version for (D) only as of 03/94 and vehicles with code 885

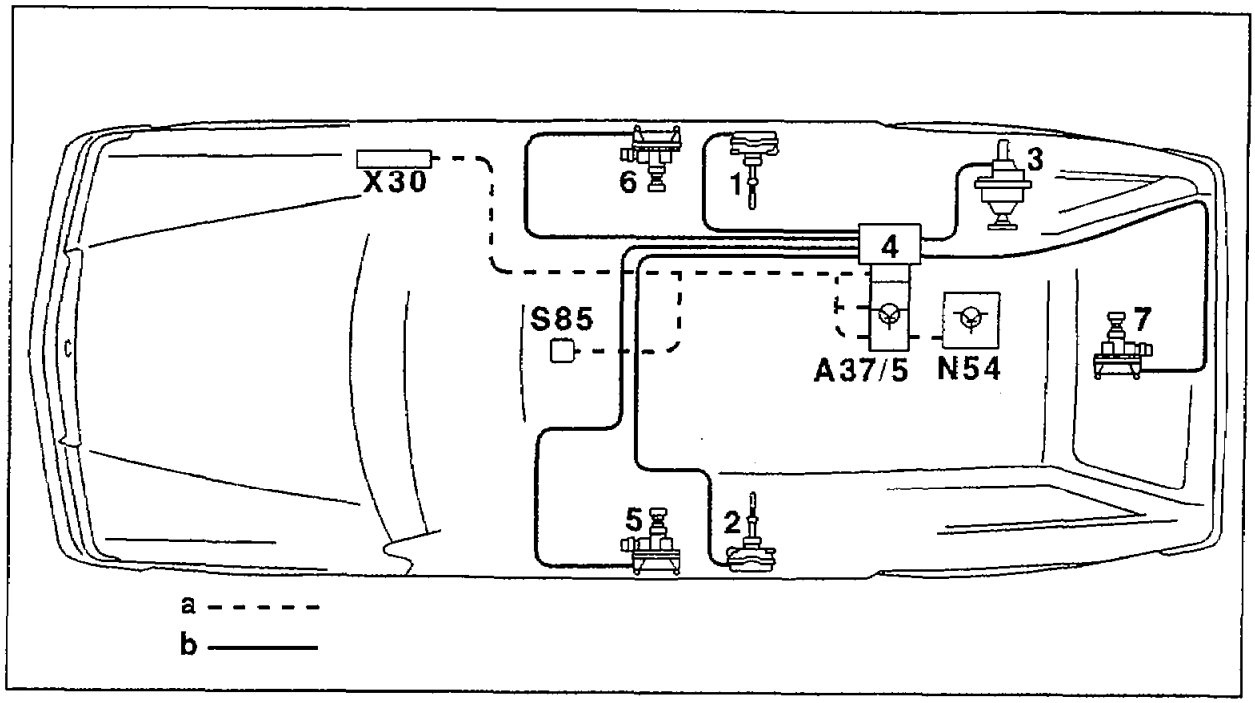

P80-5237-55

1	Right rear door actuator	A37/5	Pneumatic control unit
2	Left rear door actuator	N54	Infrared remote control unit for central locking system
3	Tank flap actuator		
4	Distribution plug with 6 connections	S85	Interior central locking system switch
5	Left front door actuator	X30	Plug connection block for optional equipment
6	Right front door actuator	- - - -	Pneumatic line
7	Trunk lid actuator	———	Electric lead

E. LHD coupes

1st version up to approx. 08/90

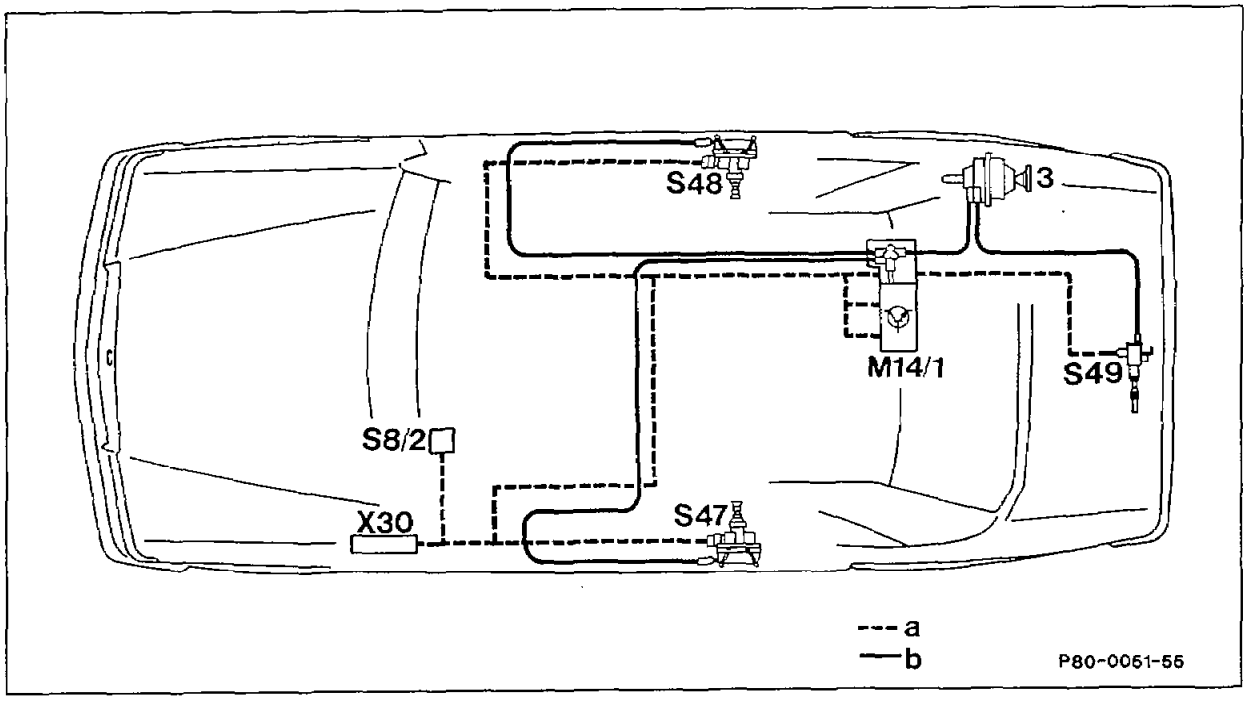

3	Fuel filler flap actuator	S48	Right front door actuator
M14/1	Supply pump, *central locking system*	S49	*Trunk lid lock actuator*
S8/2	Warning buzzer contact, lighting/central locking system	X30	Connector block, optional electrical equipment
		a	Electric lead
S47	Left front door actuator	b	Pneumatic line

2nd version as of approx. 09/90, cabriolet as of start of production

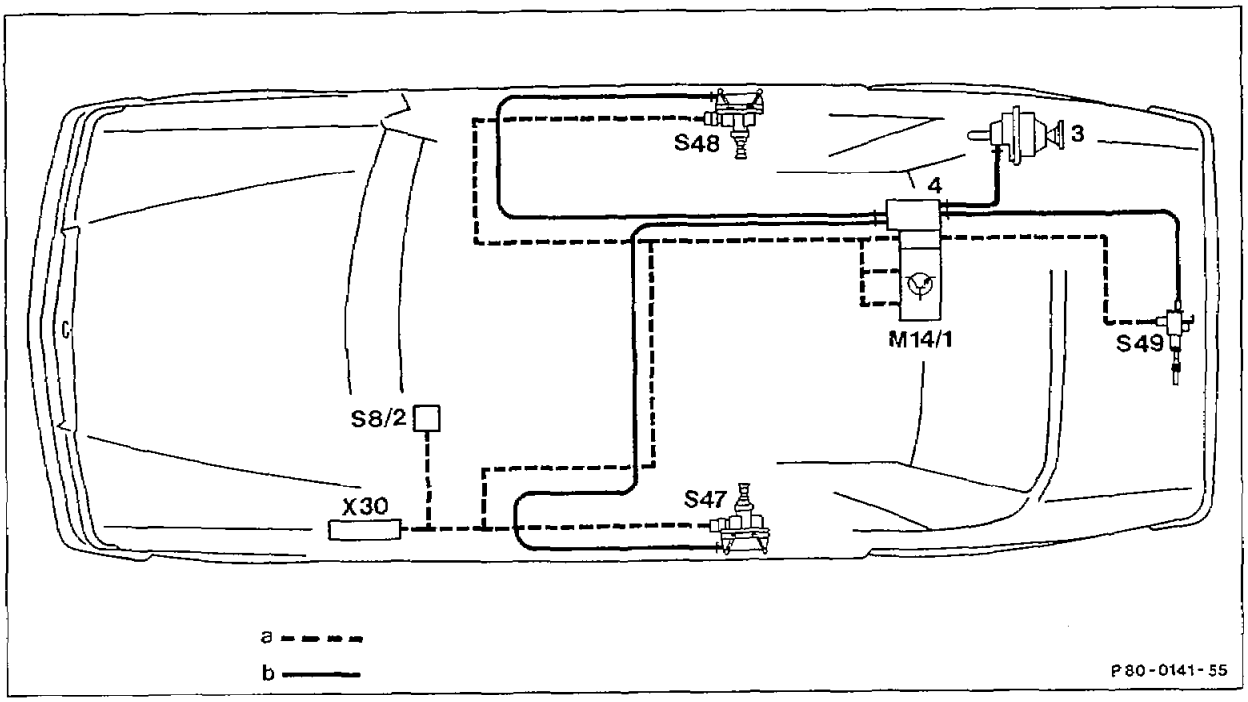

3	Fuel filler flap actuator	S48	Right front door actuator
4	6-way distributor	S49	Trunk lid lock actuator
M14/1	Supply pump, central locking system (ZV)	X30	Plug connection block for optional equipment
S8/2	Warning buzzer contact, exterior lamps/central locking system (ZV)	a	Electric lead
		b	Pneumatic line
S47	Left front door actuator		

3rd version for (D) only as of 03/94 and vehicles with code 885

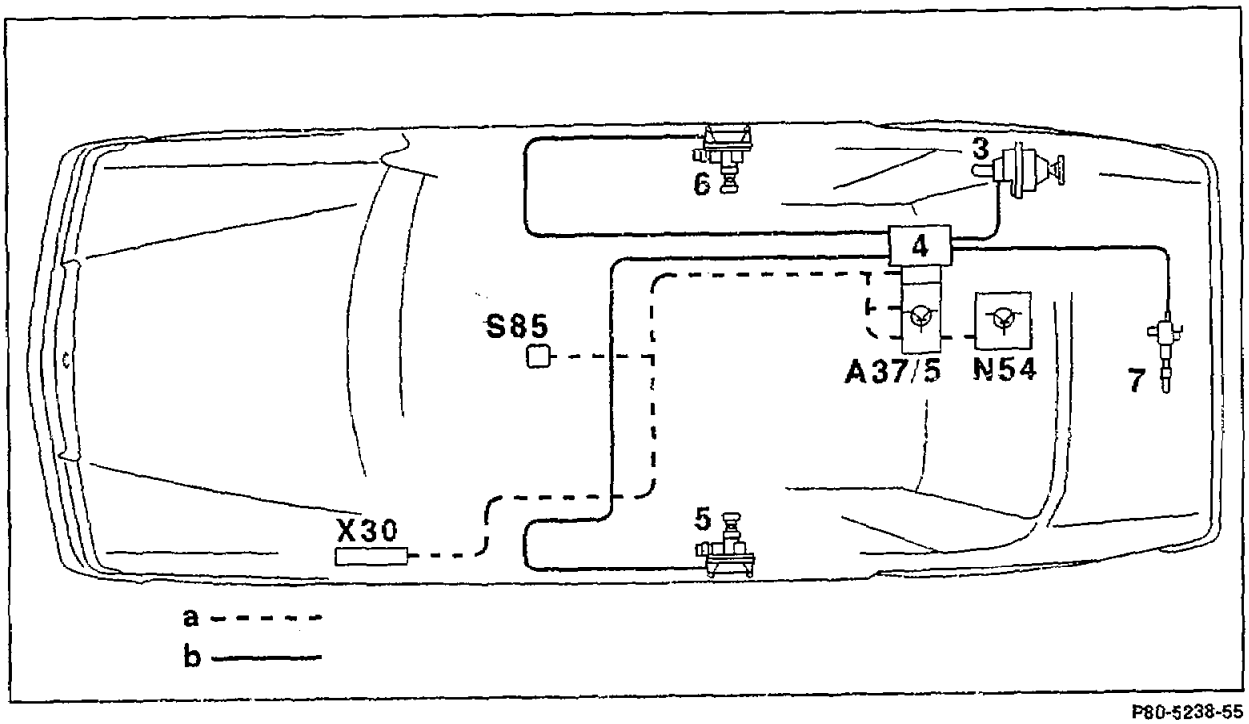

P80-5238-55

3	Tank flap actuator
4	Distribution plug with 6 connections
5	Left front door actuator
6	Right front door actuator
7	Trunk lid actuator
A37/5	Pneumatic control unit
N54	Infrared remote control unit for central locking system
S85	Interior central locking system switch
X30	Plug connection block for optional equipment
X44/1	Plug connection, central locking system/trunk lock
- - - -	Pneumatic line
——	Electric lead

F. RHD coupes

1st version up to approx. 08/90

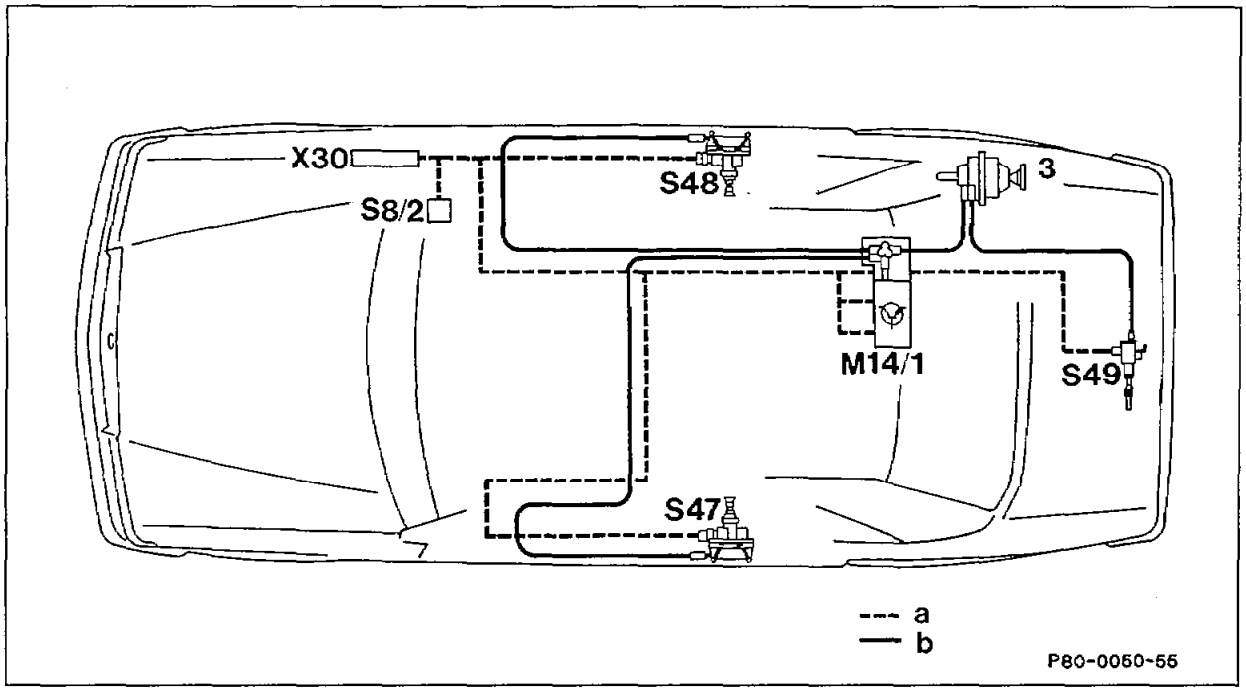

3	Fuel filler flap actuator	S48	Right front door actuator
M14/1	Supply pump, central locking system	S49	Trunk lid lock actuator
S8/2	Warning buzzer contact, lighting/central locking system	X30	Connector block, optional electrical equipment
		a	Electric lead
S47	Left front door actuator	b	Pneumatic line

2nd version as of approx. 09/90, cabriolet as of start of production

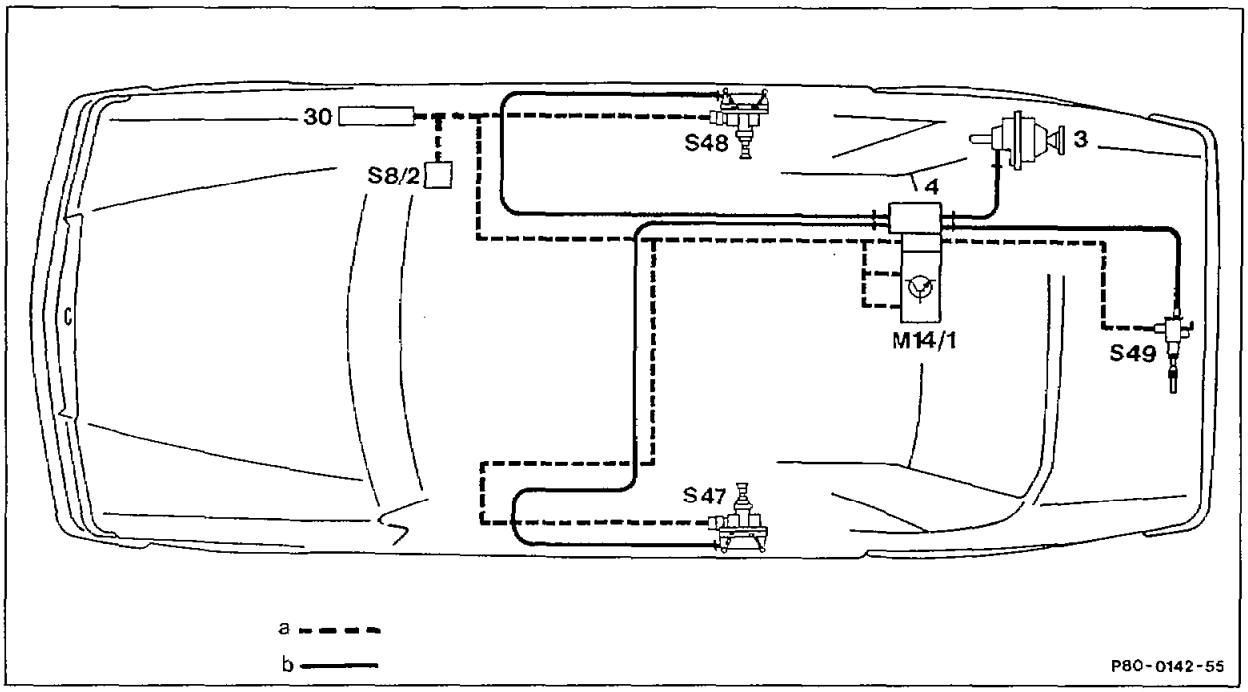

3	Fuel filler flap actuator	S48	Right front door actuator
4	6-way distributor	S49	Trunk lid lock actuator
M14/1	Supply pump, central locking system (ZV)	X30	Plug connection block for optional equipment
S8/2	Warning buzzer contact, exterior lamps/central locking system (ZV)	a	Electric lead
		b	Pneumatic line
S47	Left front door actuator		

3rd version for (D) only as of 03/94 and vehicles with code 885

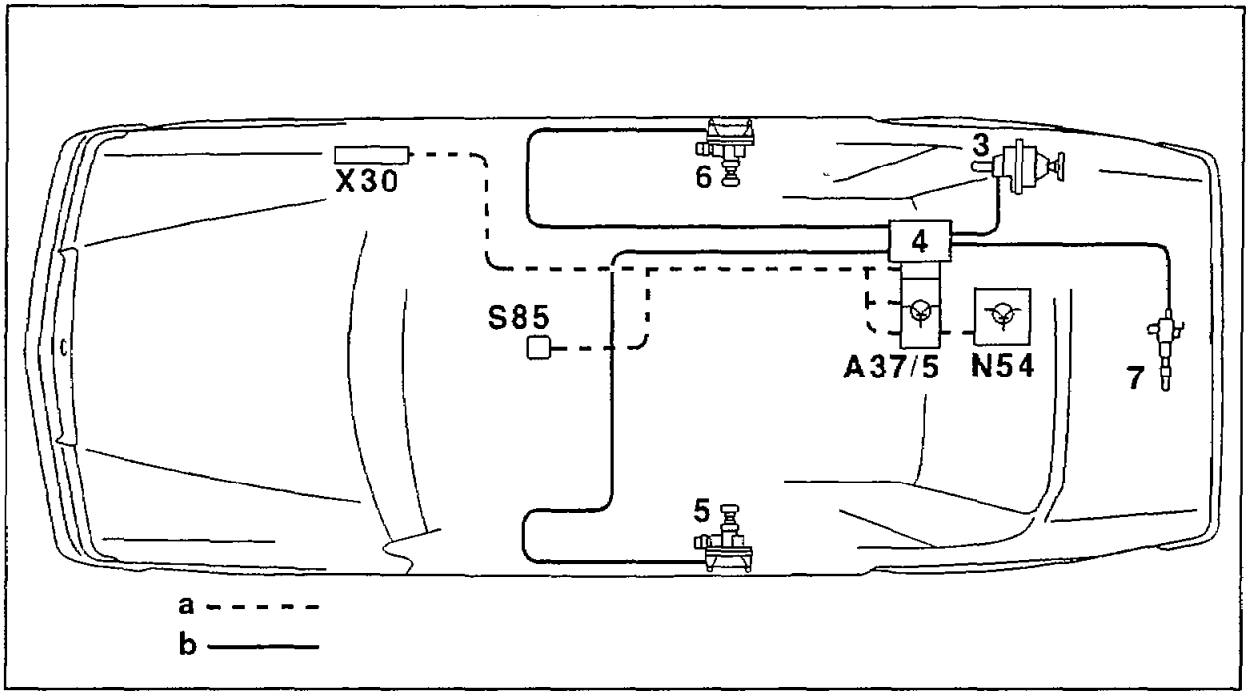

P80-5239-55

3	Tank flap actuator
4	Distribution plug with 6 connections
5	Left front door actuator
6	Right front door actuator
7	Trunk lid actuator
A37/5	Pneumatic control unit
N54	Infrared remote control unit for central locking system
S85	Interior central locking system switch
X30	Plug connection block for optional equipment
X44/1	Plug connection, central locking system/trunk lock
- - - -	Pneumatic line
——	Electric lead

Survey

No.	Subject	Model or Component	Notes
80-85041	Malfunction of central locking system without lock being operated.	All models	04/87 revised
80-85091	Central locking system does not operate at outside temperatures below 0 °C.	All models	–
80-85121	Whistling noise at fuel filler flap when locking or unlocking car.	All models	–
80-86041	Central locking system locks car by itself after ignition key withdrawn from steering lock.	All models	06/87 revised
80-87041	Car can be locked centrally from the right (RHD left) front door although the ignition key is in position 1 or 2.	All models	–
80-87042	Key is difficult to turn when locking or unlocking tailgate.	Station Wagon	05/87 revised
80-87091	Central locking system cannot be locked and unlocked from an operating point.	All models	–
80-87111	Pneumatic line dropped off at rear door actuator.	Sedan and Station Wagon	–

80-85041	Malfunction of central locking system without lock being operated.	All models	04/87 revised

Possible causes

1. Actuators in front doors poorly set.

2. Seal on trunk lid or tailgate actuator (S49) has dropped off or actuator is poorly set.

3. Connecting hoses kinked or twisted.

4. Linkage to locking button of tailgate (Station Wagon only) sticking.

5. Pressure switching point of supply pump too low.

6. Leaking actuator allows moisture to get into electronics of supply pump.

7. Leaking body part allows moisture to get into electronics of supply pump.

1st cause

Poor setting of actuators in front doors.

Remedy

Check setting of switches of front doors by slowly locking left or right front door at the lock and keeping a watch on the locking buttons in the doors.
After the locking button has moved approx. 6 – 8.5 mm, central locking system must lock.
Then, unlock central locking system again.
Adjust incorrectly set actuators.

2nd cause
Seal on trunk lid or tailgate actuator (S49) has dropped off or actuator is poorly set.

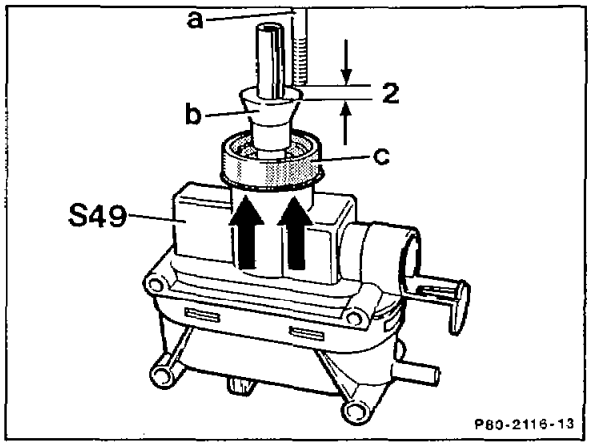

Remedy
Check stroke of actuator at tailgate or trunk lid (approx. 18 – 19 mm). Remove actuator (S49) at trunk lid or tailgate and check that seal (c) is correctly positioned; install seal (c), if necessary. Move actuator into installation position and re-install. Then, push shift rod fully to the left, insert into shift rod mounting free of tension and push sliding sleeve as far as a stop to the left.

Note
Minimum distance between shift rod (a) and sliding sleeve (b) = 2 mm. Shorten shift rod by approx. 5 mm if necessary.

3rd cause
Connecting hoses kinked or twisted.

Remedy
Examine rubber connectors at actuators for kinking and twisting. Renew connector, if necessary, and install properly.

4th cause
Linkage to locking button of tailgate (Station Wagon only) sticking.

Remedy
Check linkage to locking button of tailgate for ease of movement by detaching linkage at lock. Repair if necessary.

5th cause
Pressure switching point of supply pump too low.

Remedy
Check pressure switching point of supply pump by connecting tester for vacuum and pressure systems with 3-point distributor between each actuator and the detached pneumatic line (specification: min. 420 mbar pressure or vacuum). If this pressure is not reached, check connectors or pneumatic lines for kinking or examine supply pump. Renew if necessary (refer to 80-108).

6th cause
Leaking actuator allows moisture to get into electronics of supply pump.

Remedy
Move all doors into first locking detent (do not close doors fully) and check central locking system first in vacuum range, then in pressure range for leaks. Renew leaking components, if necessary.
If a leak is detected, check whether moisture has got into the system. Blow through moist pneumatic lines individually with nitrogen or dry compressed air until no more moisture is present. Remove moist actuators, operate approx. 5 times with pneumatic connection downwards. Then, shake out drops of water. Repeat this procedure several times until actuator is dry.

7th cause
Leaking body parts allow moisture to get into electronics of supply pump.

Remedy
If moisture is present in the area of the supply pump, seal any leaking body points, eliminate moisture and renew supply pump.

80-85091	Central locking system does not operate at outside temperatures below 0 °C.	All models	–

Cause
Leaking actuators allow moisture to get into the line system of central locking system and moisture ices up.

Remedy
Thaw out car. Detach pneumatic line at supply pump and check whether moisture has got into the system. If moisture is present, first check central locking system in vacuum range, then in pressure range for leaks and renew leaking components. Blow through moist pneumatic lines individually with nitrogen or dry compressed air until no more moisture is present. Remove moist actuators, operate approx. 5 times with pneumatic connection down the way. Then, shake out drops of water. Repeat this procedure several times until the actuator is dry.

80-85121	Whistling noise at fuel filler flap when locking or unlocking car.	All models	–

1st cause
Fuel filler flap poorly set.

Remedy
Adjust fuel filler flap so that locking rod does not rub against it.

2nd cause
Fuel filler flap actuator is insufficiently noise-dampened.

Remedy
If actuator extremely noisy, install fuel filler flap actuator (a) Part No. 000 800 91 75 together with guide sleeve (b) Part No. 124 800 01 79. The 3-pin distributor is not fitted. Connect pneumatic line to actuator with connectors Part No. 007 997 61 82.

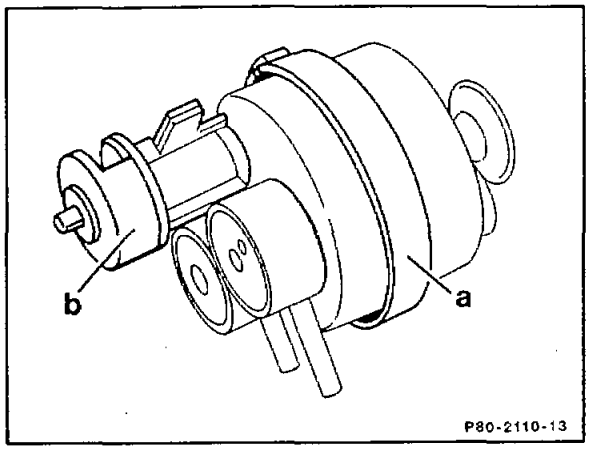

a Fuel filler flap actuator
b Guide sleeve

80-86041	Central locking system locks car by itself after key withdrawn from steering lock.	All models	06/87 revised

Cause
1. Right (RHD left) front door actuator poorly set.
2. Right (RHD left) front door actuator faulty.

Remedy
Check switch setting of right (RHD left) front door, adjust if necessary, by slowly locking right (RHD left) front door at the lock and keeping a watch on locking buttons in the doors. After the locking button has moved approx. 6 – 8.5 mm, the central locking system must lock. If setting is in order:
Renew right (RHD left) front door actuator.

80-87041	Car can be locked centrally from right (RHD left) front door although the ignition key is in position 1 or 2 in steering lock.	All models	–

Cause
Warning buzzer contact of lighting/central locking system S8/2 at steering lock faulty.

Remedy
Renew warning buzzer contact of lighting/central locking system S8/2.

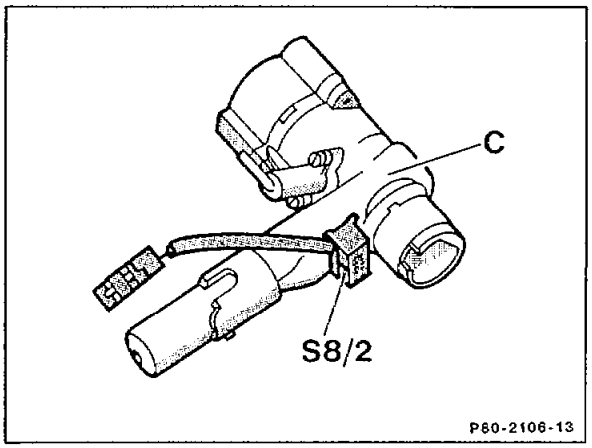

80-87042	Key is difficult to turn when locking or unlocking tailgate.	Model 124 Station Wagon	05/87 revised

Cause
Tailgate actuator (S49 with snap-in seal) sticking.
Identification: Actuator has white or red seal (arrow) or a yellow sliding sleeve.

Remedy
Remove tailgate actuator (S49) and install a front door actuator (S47, S48) without snap-in seal in its place.
Identification: black

Note
Increased effort is required to re-open the car immediately after closing it and vice versa, as the supply pump requires approx. 4 – 10 seconds for air admission.

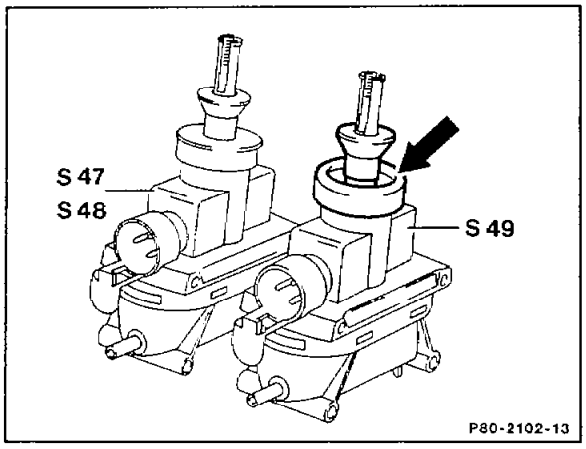

80-87091	Central locking system cannot be locked and unlocked from an operating point	All models	–

Cause
Connecting rod from actuator to locking pin has broken off at the actuator (Manufacturer Hella).

Remedy
Renew affected actuator (S47, S48 and S49).
In addition, remove the two other actuators in the front door or trunk lid (tailgate).

Examine removed actuators to determine whether they are from the manufacturer "Hella" with production code number 137, 147, 157, 167 or 177 (see ill.); if yes, renew actuator (S).

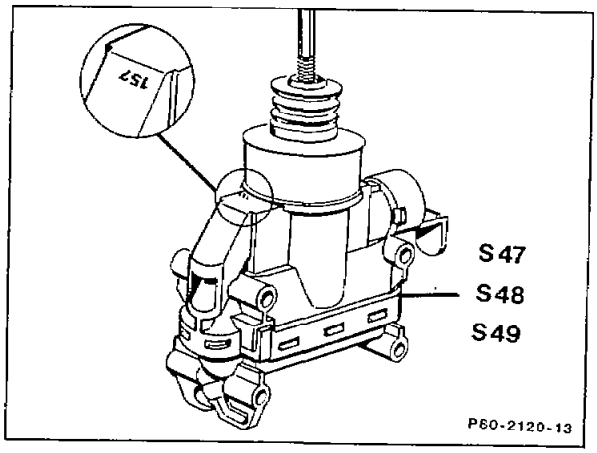

80–87111	Pneumatic line dropped off at rear door actuator.	Sedan and Station Wagon	–

The following models may be affected:
Sindelfingen Plant up to Vehicle-Ident-End-No.
A 197790 (02/86)
Bremen Plant up to Vehicle-Ident-End-No.
F 010913 (05/86)

Cause
Pneumatic line is pulled off by frequently opening and closing rear door.

Remedy
Retrofit 350 mm long rubber compensating piece.

Scope of work

1 Remove panelling of centre pillar, door trim and rear door actuator.

2 Withdraw pneumatic line from centre pillar and shorten by 250 mm.

3 Install 350 mm long connecting hose with rubber disk fitted on, to rear door actuator so that the distance between actuator and rubber disk is approx. 80 mm.

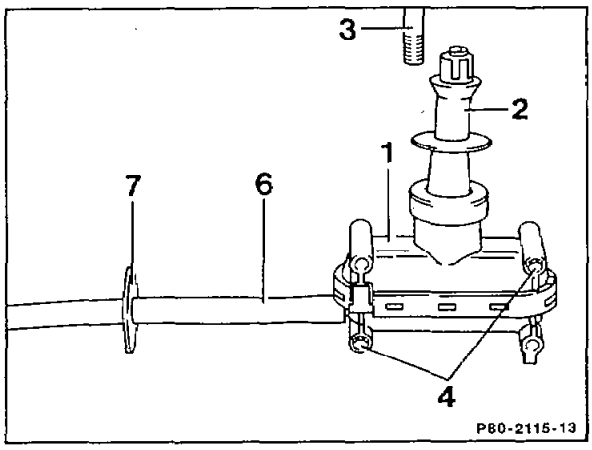

1 Rear door actuator
2 Sliding sleeve
3 Shift rod
4 Bolt
5 350 mm long connecting hose
7 Rubber disk

4 Install rear door actuator with pneumatic connection facing direction of travel (turned through 180° compared to original position) in rear door and lay connecting hose into centre pillar.

5 Move rubber disk on the connecting hose up to opening for protective hose in rear door.

7 Fit together 350 mm long connecting hose (6) and pneumatic line (8) in centre pillar (push-length 12 mm).

8 Install door trim and panelling of centre pillar.

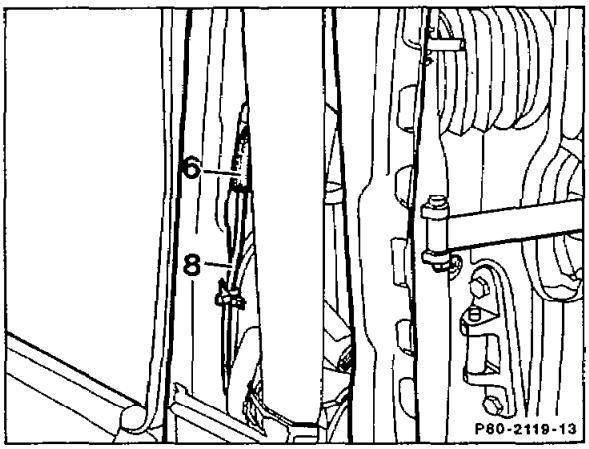

Parts	Part No.
Connecting hose	007 997 61 82
Rubber disk	126 997 02 40

80 Central locking system

Designation	Nature and reason for modification	Implementation dates
Fuel filler flap actuator	Actuator equipped with anti-theft lock	approx. 03/85
Wiring harness	Ground connection from trunk lid actuator (S49) via lighting/central locking system warning buzzer contact (S8/2)	approx. 05/85
Rear door actuator	Direction of installation modified (connection in direction of travel) and connection hose lengthened to 350 mm	A 197790 F 010913
Supply pump	Electronics improved	A 245572 Sedan
Wiring harness	Ground connection from trunk lid actuator (S49) via main ground (W1)	approx. 05/86 Sedan
Actuator	Actuator with sliding sleeve lock	approx. 12/86 phased in
Fuel filler flap actuator	Clip-fit actuator	A 490369 Sedan Station Wagon from start of production
Trunk lid actuator	Clip-fit actuator with quick-fit connection	Coupé from start of production
Supply pump	Additional manufacturer (VDO)	approx. 06/87
Tailgate actuator	Replaced by actuator with soft seal (as front door)/easier to operate	Station Wagon F 60097
Wiring harness	Improved soldered supporting points (watertight)	approx. 03/88
Lighting/central locking system warning buzzer contact (S8/2)	Switch without cable	A 600532 F 052098
Actuator	Neutral housing (Hella)	approx. 04/88
Pneumatic lines	Pneumatic lines with quick-fit connections	from A 861403 to A 866954 from F 097724 to F 098305
Supply pump	Power boost	A 875395 F 092086
Front door actuator	Protective covering	A 391256 F 025886

Designation	Nature and reason for modification	Implementation dates
Rear door actuator	Protective covering	A 711566 F 057649
Fuel filler flap actuator	Additional manufacturer (Bosch)	05/90
Pneumatic lines	Pneumatic lines with quick-fit connections	approx. 09/90
Trunk lid lock actuator	Actuator with red shift rod mounting (with trunk lid auxiliary locking device only)	approx. 11/91
Supply pump	Infrared remote control for central locking system (IFZ)	approx. 10/92

Checking, correcting windshield washer fluid level 8210

All models

Washer fluid

Water and approved MB concentrate

Fill washer reservoir with water. Add specified quantity of MB windshield washer concentrate.

Refer to table on package for mixing ratio.

Note the differing concentrations for summer and winter usage.

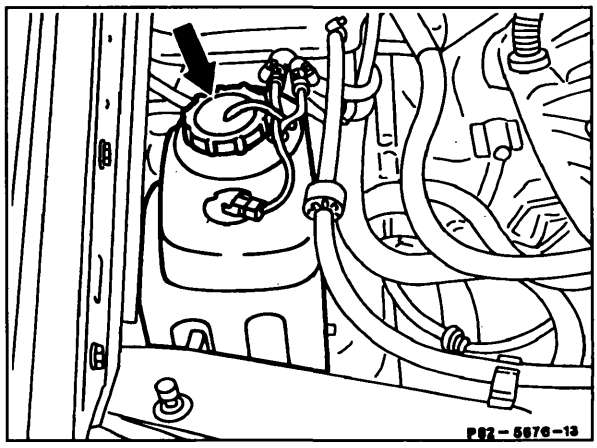

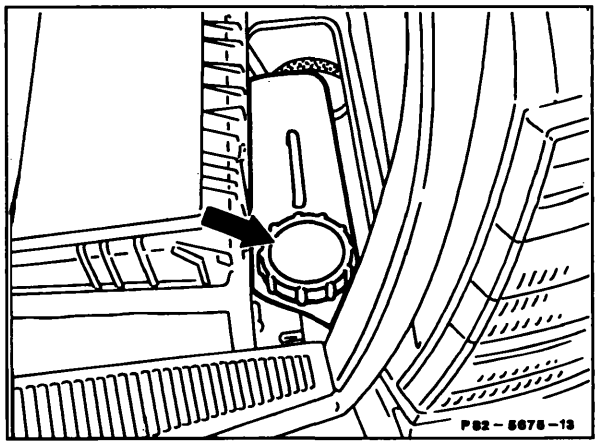

Cleaning cassette deck tone head

8230

All models

Special tools

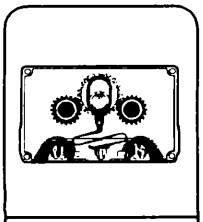

903 589 00 68 00

Soak felt parts of cleaning cassette with cleaning solution.

Insert cleaning cassette and play for about 30 seconds.

On units with auto reverse, turn cassette over and play for another 30 seconds.

Cleaning antenna mast

8231

All models

- Switch radio on.
- Clean antenna mast with cleaning pad.
- Switch radio off.
- Repeat procedure several times.

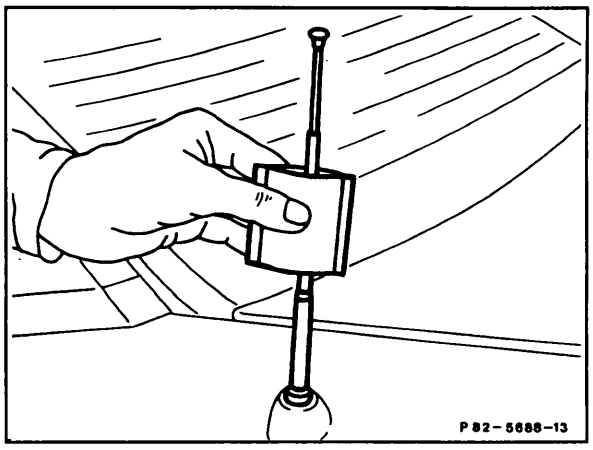

- Wipe mast dry with a clean rag.

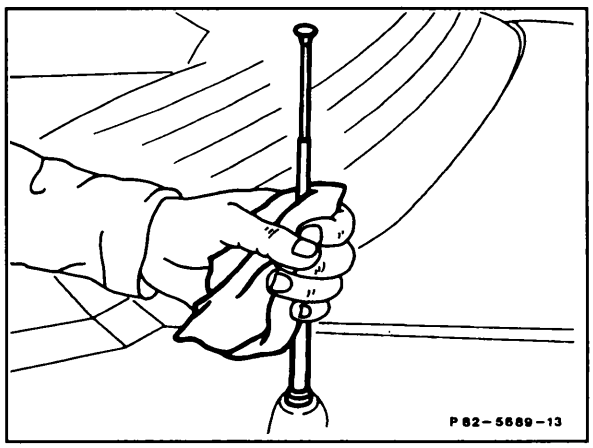

Headlamp and exterior lamp inspection

8251

All models

Note: A mirror can be used instead of an assistant when checking external lamps.

The following operations can be checked by turning the rotary lamp switch:

Right and left side standing lamp
Parking lamps/tail lamps/instrument lamps
Low beam headlamps
High beam headlamps and high beam indicator lamps
Fog lamps/rear fog lamps and indicator lamp

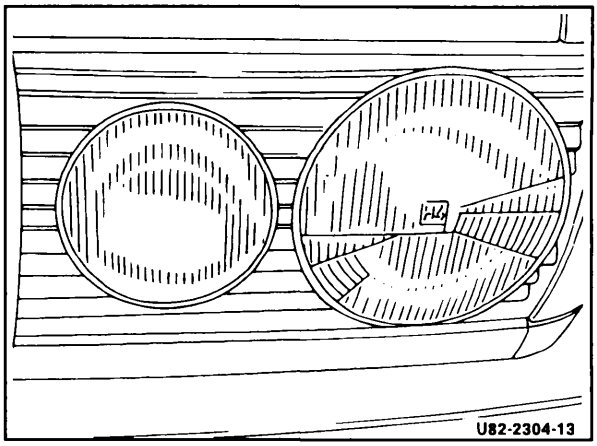

Key in ignition in position 0

Operational check of:

Warning flashers and indicator lamp

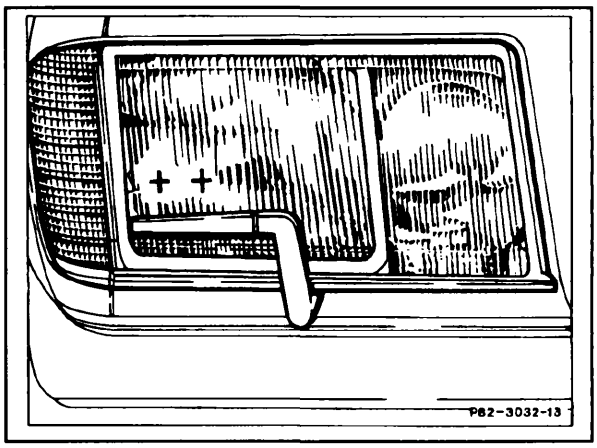

Key in position 2

Engine switched off, parking brake engaged.

Operational checkup of:

Stop lamp (including center high mounted stop lamp[as of model year 1986]) by depressing brake pedal.
Backup lamps by selecting reverse gear.

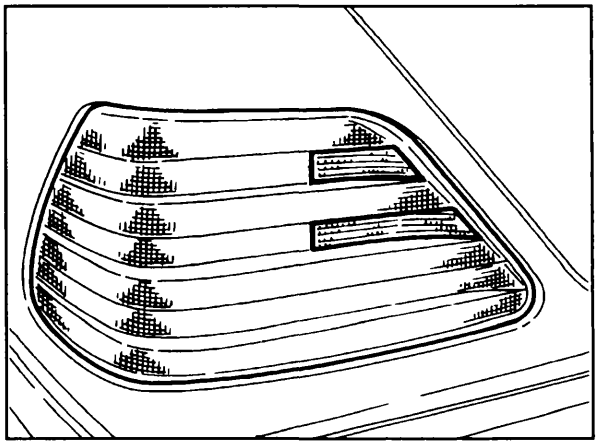

Windshield & headlamp wiper/washer inspection 8252

All models

Windshield wiper

Check edge of wiper blade for signs of hardening or cracks.

Also check that the edge of the wipe blade turns over when changing direction. If necessary, correct wiper arm offset so that end of wiper arm is parallel with wiping field. This can be easily checked by making a wooden gauge.

Operate windshield wiper and washer briefly. Wiping field should be wiped clean.

Windshield washer

Clean nozzles with suitable needle.

Check adjustment of nozzles.

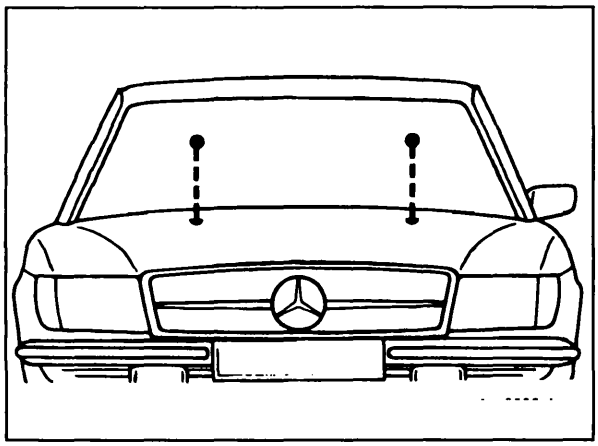

Model 107 1st version

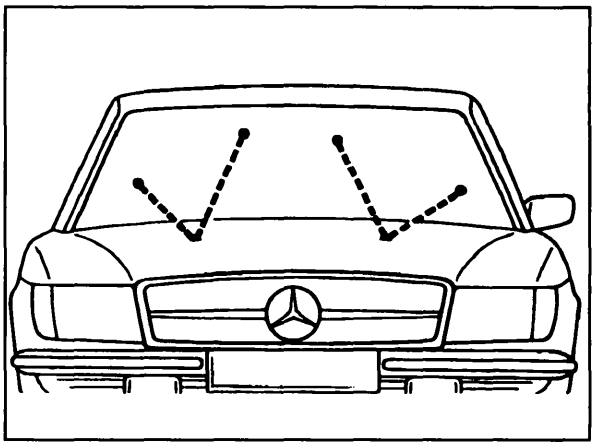

Model 107 2nd version

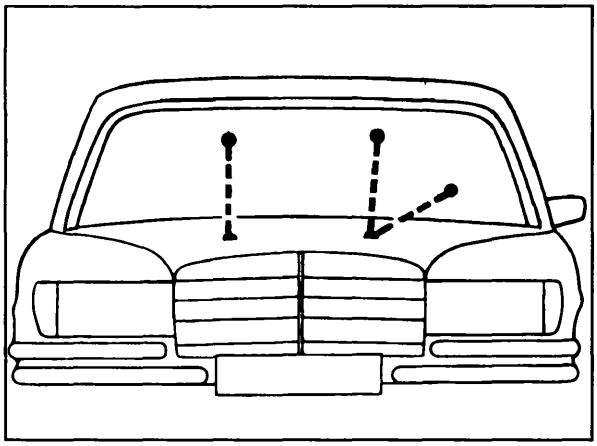

Model 123

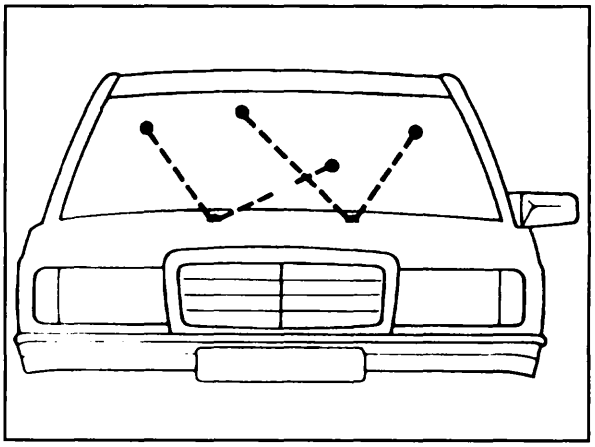

Model 124

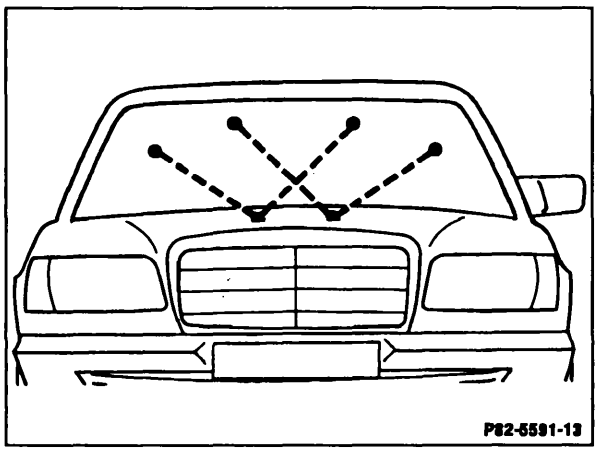

Model 126

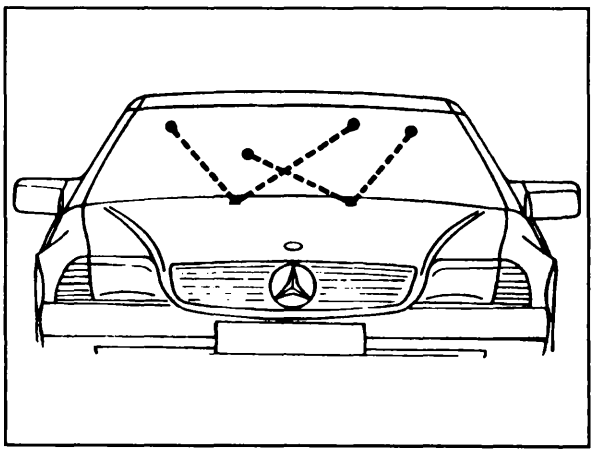

Model 129

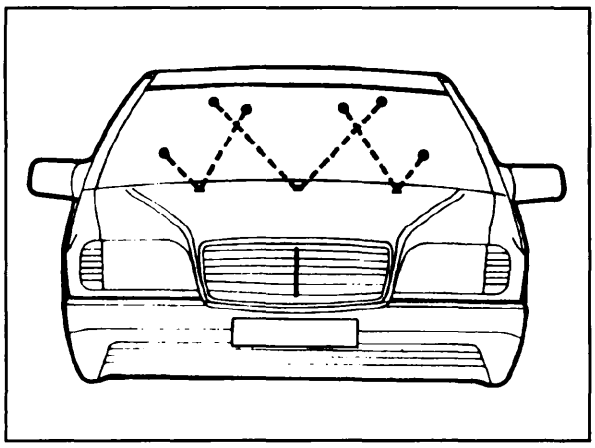

Model 140

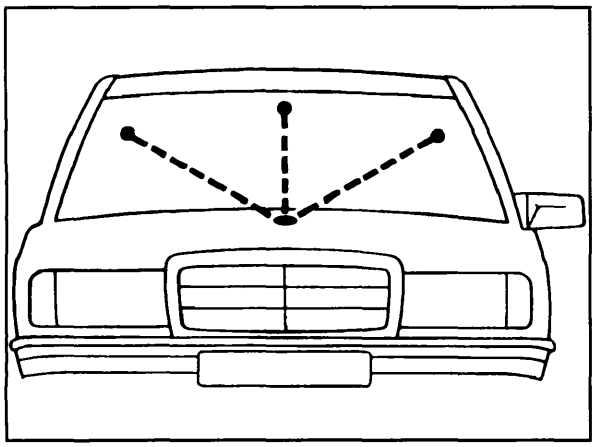

Model 201 1st version

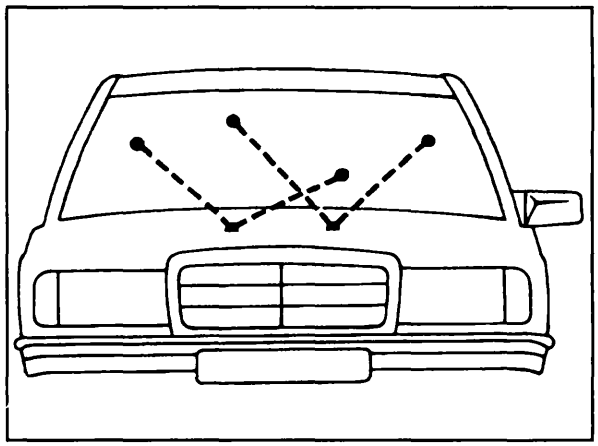

Model 201 2nd version

Headlamp cleaning system

Check edge of wiper blade for signs of hardening and cracks.

Check adjustment of wiper blades.

Switch on parking lamp and operate headlamp cleaning system.

The water spray should hit the area just above the parked wiper blade (crosses) on the headlamps.

Clean jets with suitable needle or adjust as necessary.

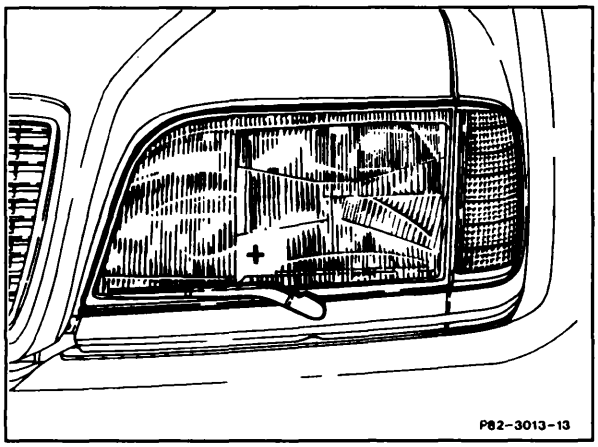

Model 140

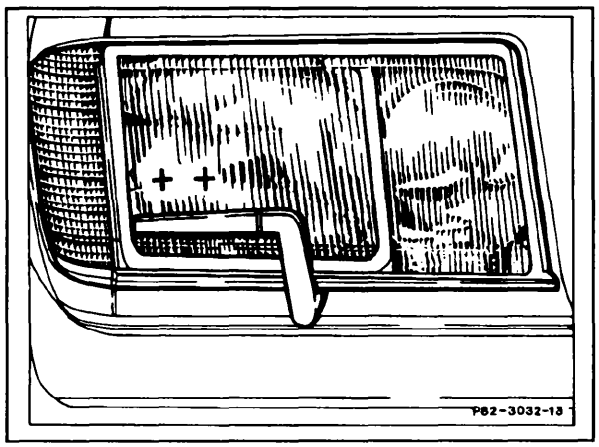

Models 124, 126, 201

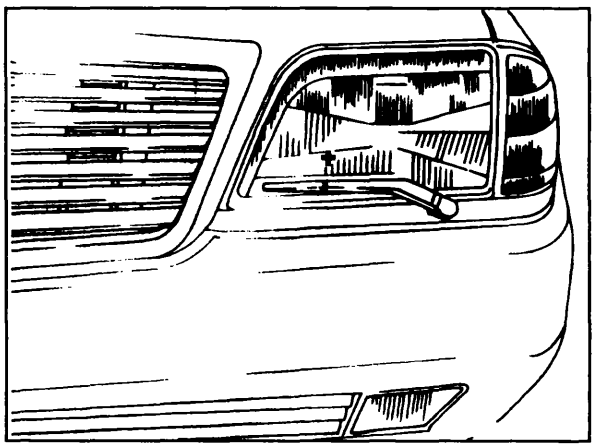
Model 129

Replacing windshield wiper blade

8280

All models

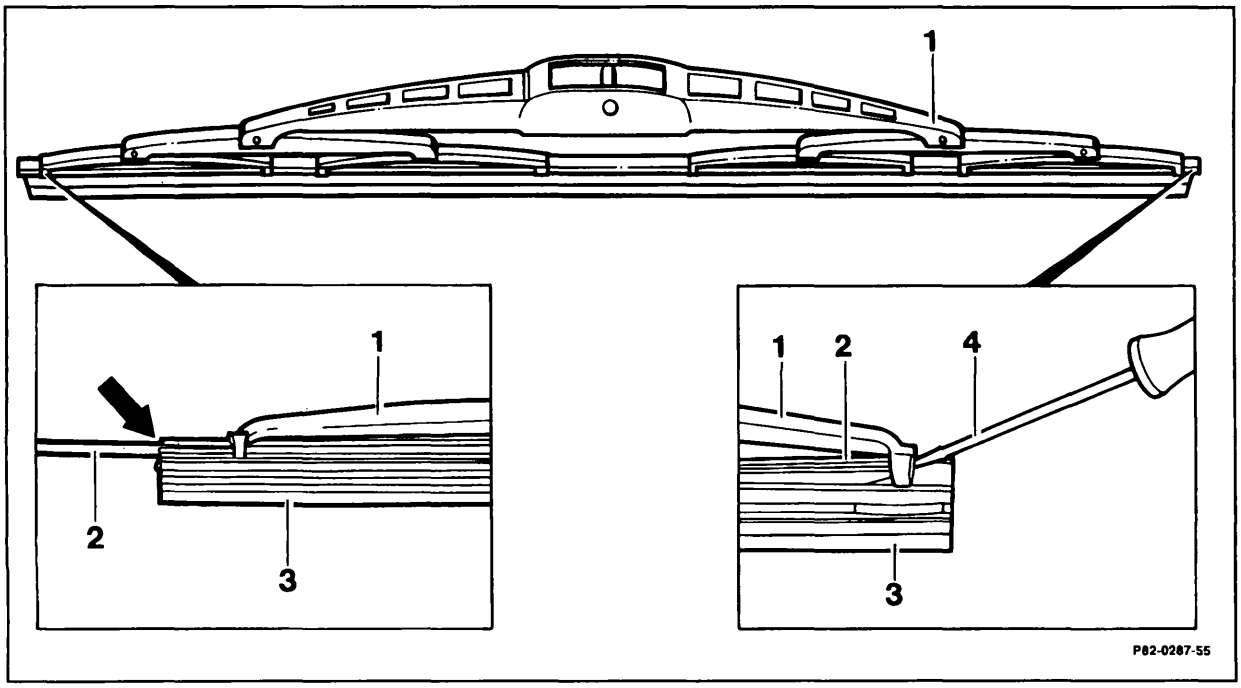

- Remove wiper assembly (1) from arm.
- Pull retaining springs (2) out from the open profile end of the wiper blade (3).
- Disengage wiper blade (3) from wiper assembly brackets.
- Engage new wiper blade into wiper assembly brackets.
- Slide retaining springs into wiper blade from open profile end with curvature facing toward windshield. The retaining springs will engage more easily if the front corners are angled off (arrow) and coated with soapy water. Position retaining springs against solid surface and press into wiper assembly (1).
- Operate windshield wiper(s) and washer system. The wiped area should be cleared. Extremely dirty windshields should be cleaned on separate order.

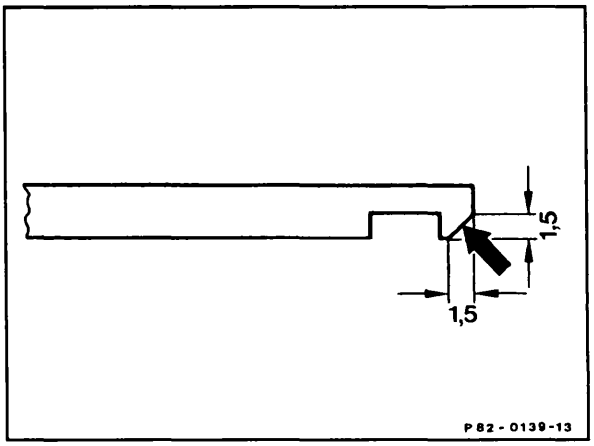

82–0010 Removing and installing dome lamp control unit and rear dome lamp

Operation no. of operation texts and work units or standard texts and flat rates:
82–0420, 82–0421

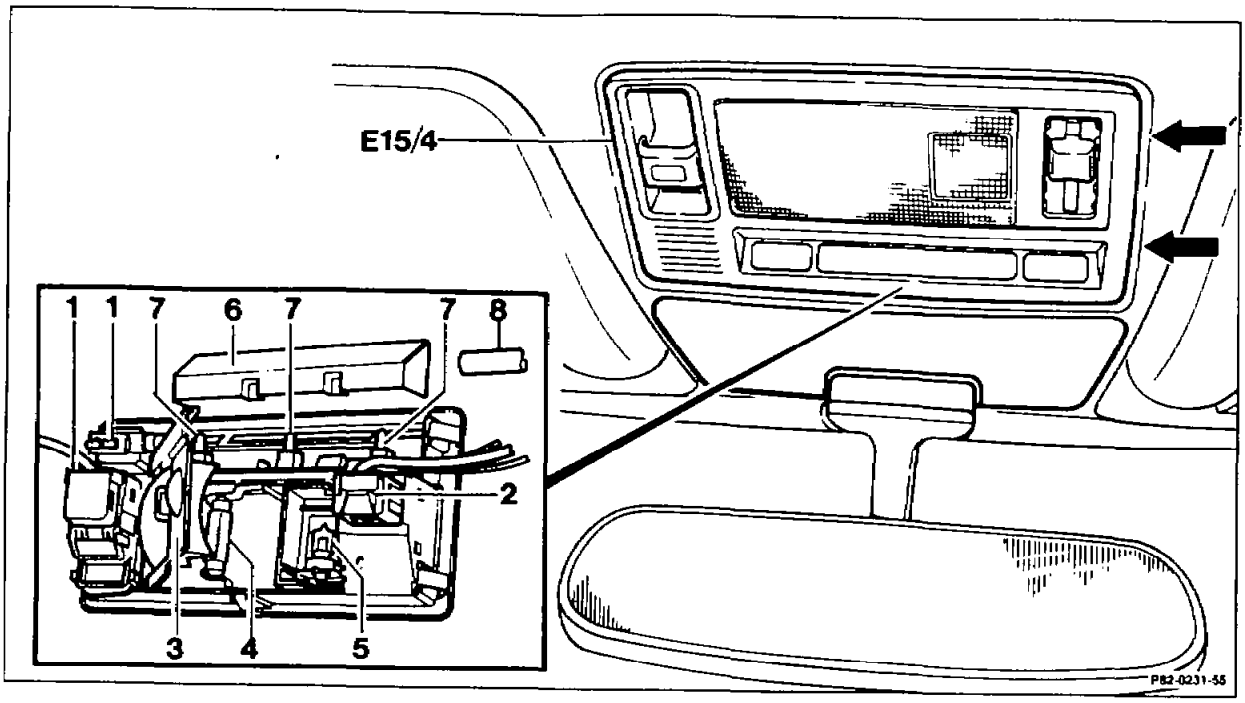

Note
Control unit of dome lamp, production breakpoint 08/85 (for function see 82–0012).
Removal of the dome lamp prior to 08/85 is identical to dome lamp control unit.

Dome lamp with reading lamp and seat belt reminder (E15/4)	unclip, clip in place (arrows).
Dome lamp with reading lamp and seat belt reminder (E15/4)	remove, insert.
Electrical connections (1 and 2)	unplug, plug in.
Air hose (8) from in-car temperature sensor	detach, fit on.

Reflector (3)	unclip, clip in place.
Dome lamp bulb (4)	remove, replace.
Reading lamp bulb (5)	remove, replace.
Cover (6) for seat belt reminder bulbs	unclip, clip in place.
Seat belt reminder bulbs (7)	remove, replace.

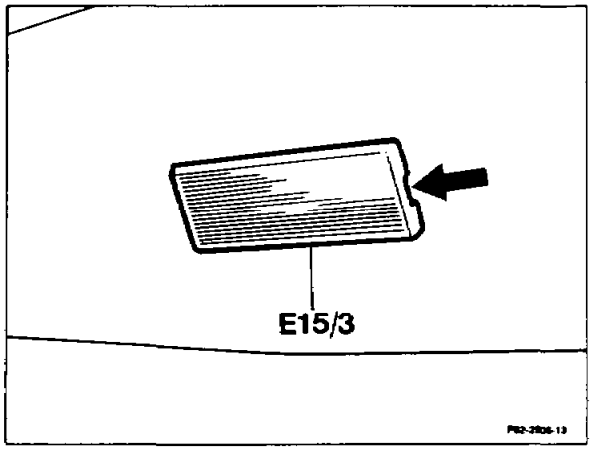

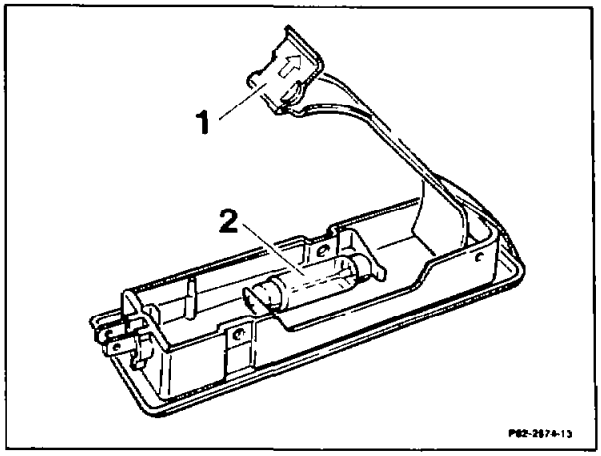

Rear dome lamp (E15/3)	release, snap in (arrow).
Electrical connection	unplug, plug in.
Reflector (1)	lift up, push down into place.
Bulb (2)	remove, replace.

82–0012 Function of dome lamp control unit

Operation no. of operation texts and work units or standard texts and flat rates:

Dome lamp control unit

The dome lamp control unit contains the dome lamp and reading lamp, the seat belt reminder lamp, the in-car temperature sensor and, if the optional tilting/sliding roof is fitted, the switch for the latter.

Dome lamp

Switch position a:	Dome lamp and reading lamp on continuously
Switch position b:	Dome lamp and reading lamp switched off
Switch position c:	Reading lamp switched on
Switch position d:	Dome lamp switched on with delay circuit of 6 + 4 seconds

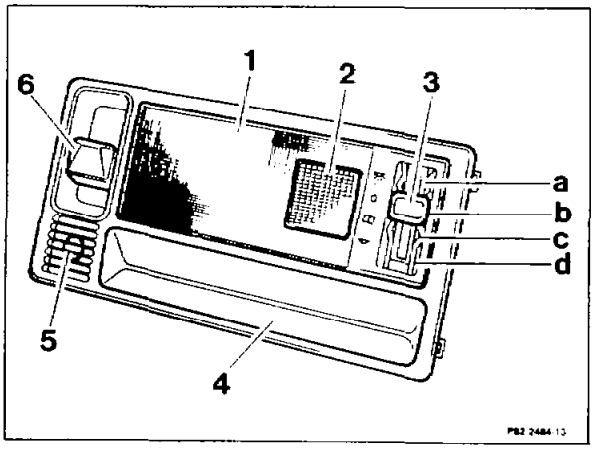

1 Dome lamp
2 Reading lamp
3 Dome lamp switch
4 Seat belt reminder lamp
5 In-car temperature sensor
6 Tilting/sliding roof switch (option)

Seat belt reminder lamp

A seat belt reminder lamp is fitted to indicate that the seat belt should be fastened. It flashes irrespective of whether the belt is fastened. The seat belt reminder lamp is controlled by the door contact switches and the electronic cutoff delay of the dome lamp. When the front door opened, the seat belt reminder lamp shows a steady light. When the dome lamp switch is in position "0", the seat belt reminder lamp is illuminated only if the ignition is switched on (key position 2).

When the front door is closed, the seat belt reminder lamp flashes for 12 ± 1 seconds. This time is reduced to 6 ± 1 seconds when the ignition is switched on (key position 2). If the ignition is switched on again after this period (key position 2), the seat belt reminder lamp once again flashes for 6 ± 1 seconds.

Note
In the countries Iceland, Canada, Norway and Sweden the legal regulations prescribe that the low beam headlamps also be switched on during the day.

As of MY 94 the daytime running lamp control module (N35) for the Canada version has been modified so that the headlamp cleaning system only operates if the lights are switched on at the exterior light switch (S1).

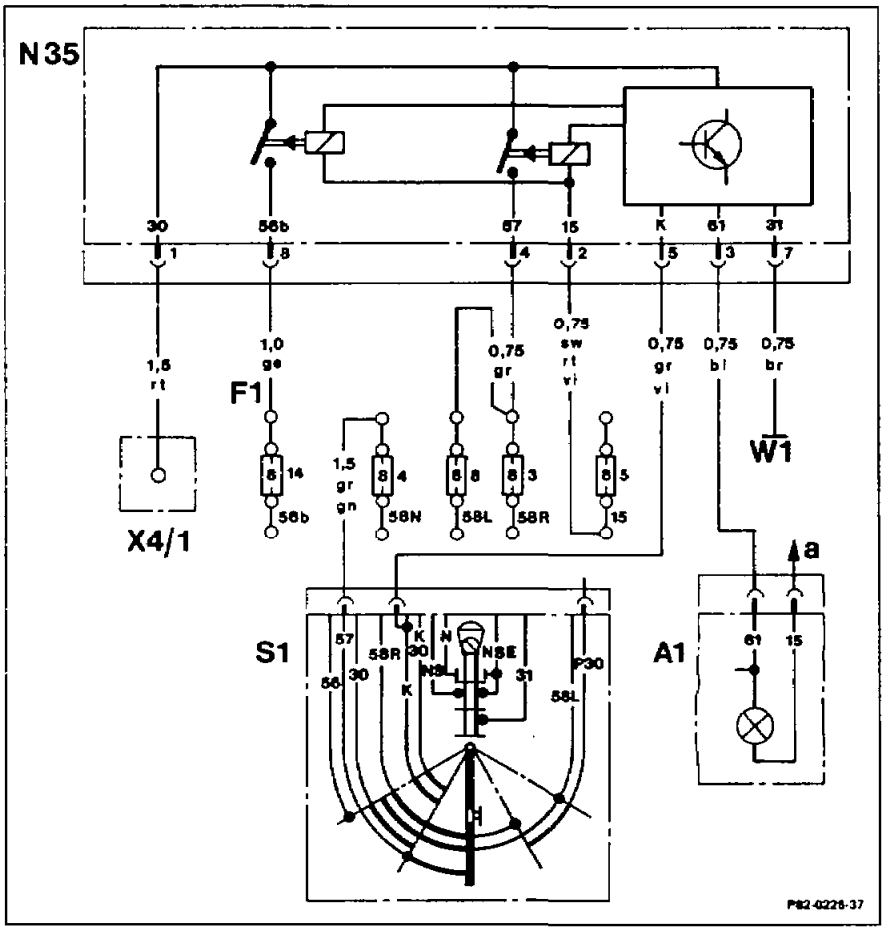

Wiring diagram of daytime driving lamp Iceland, Norway, Sweden

F1	Fuse and relay box	W1	Main ground (behind instrument cluster)
N35	Daytime driving lamp control unit	X4/1	Terminal block, terminal 30/interior (2-pin)
S1	Exterior lamp switch	a	To fuse and relay box, fuse 7

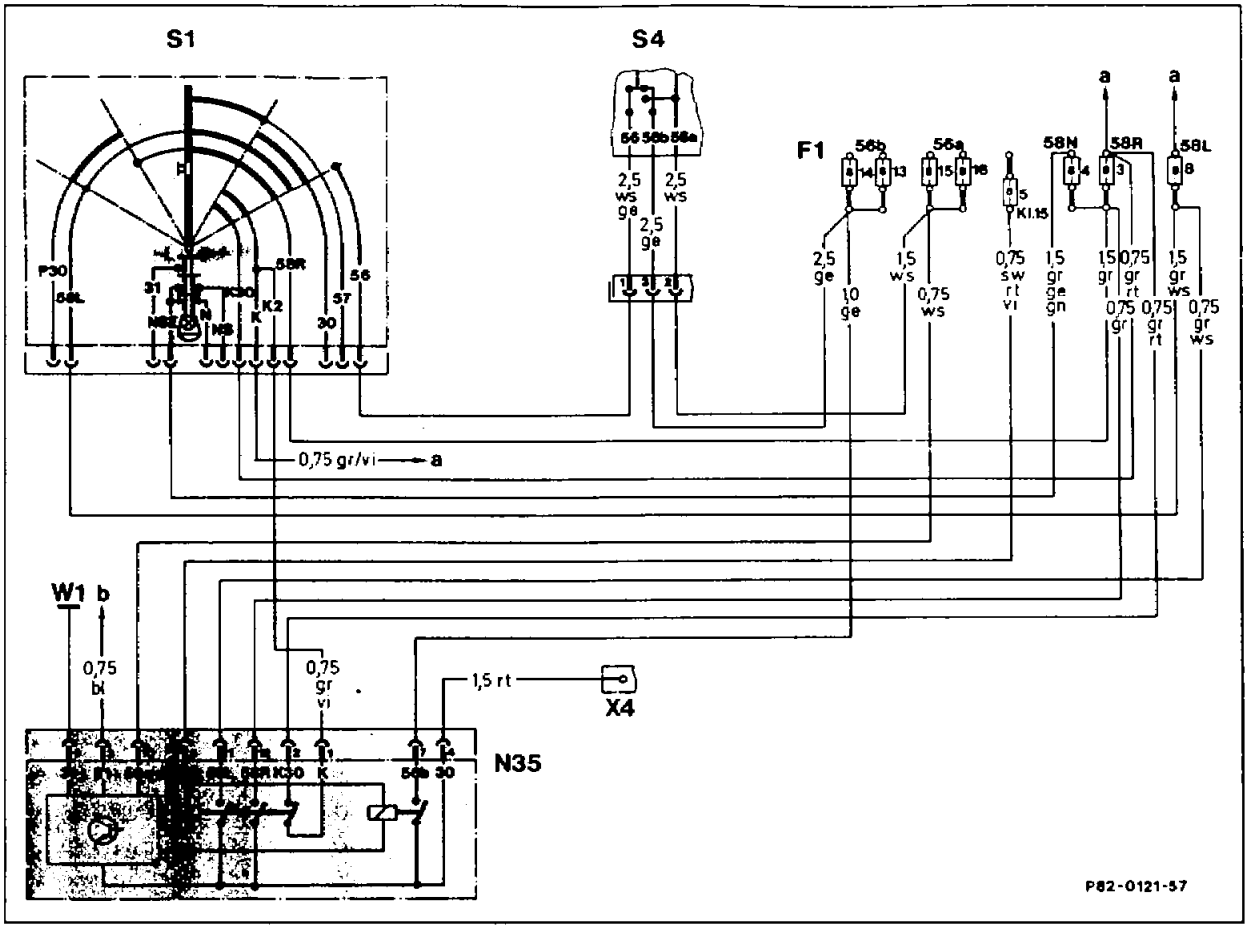

Circuit diagram, daytime driving lamps, Canada up to model year 91

F1	Fuse and relay box	X4	Terminal block, terminal 30, fuse and relay box (2-pin)
N35	Daytime driving lamp control unit	a	To exterior lamp failure monitoring unit (N7)
S1	Exterior lamp switch	b	To instrument cluster, charge indicator lamp (A1e5) terminal 61
S4	Combination switch		
W1	Main ground (behind instrument cluster)		

Note

For circuit diagrams as of model year 92 see circuit diagram notebook.

The daytime driving lamp control unit (N35) is activated by terminal 61.

When the engine is running, the following lights are switched on:

Iceland, Norway and Sweden version
- Parking lamp
- Tail lamp
- Low beam
- License plate lamps

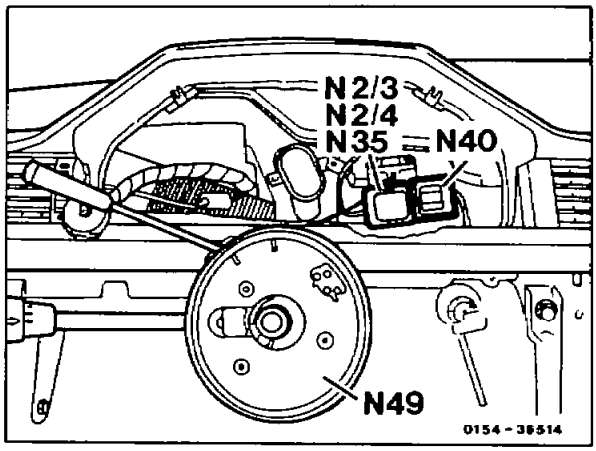

Location:

N35 Control unit
Daytime driving lamp (IS) (N) (S)

Canada version
- Marker lamp
- Low beam
- Licence plate lamps
- Tail lamps
- Instrument lighting

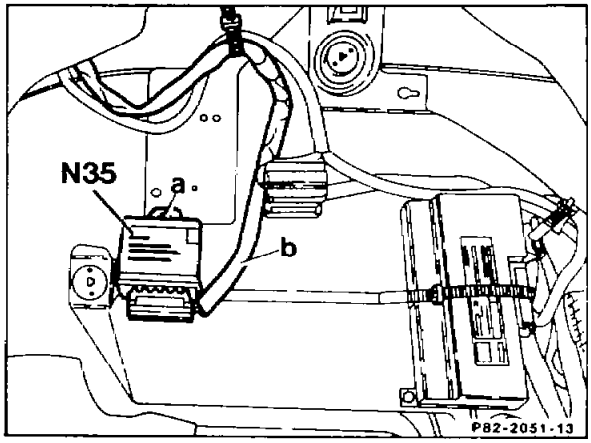

Location:

N35 Control unit
Daytime driving lamp (CDN)

82–0071 Retrofitting daytime driving lamp control

(CDN) (IS) (N) (S)

Preceding work:
Exterior lamp switch removed (54–3250).
Instrument cluster removed (54–6015).
Remove covers on left below instrument panel (68–150).

Operation no. of operation texts and work units or standard texts and flat rates:

A. Iceland, Norway, Sweden version

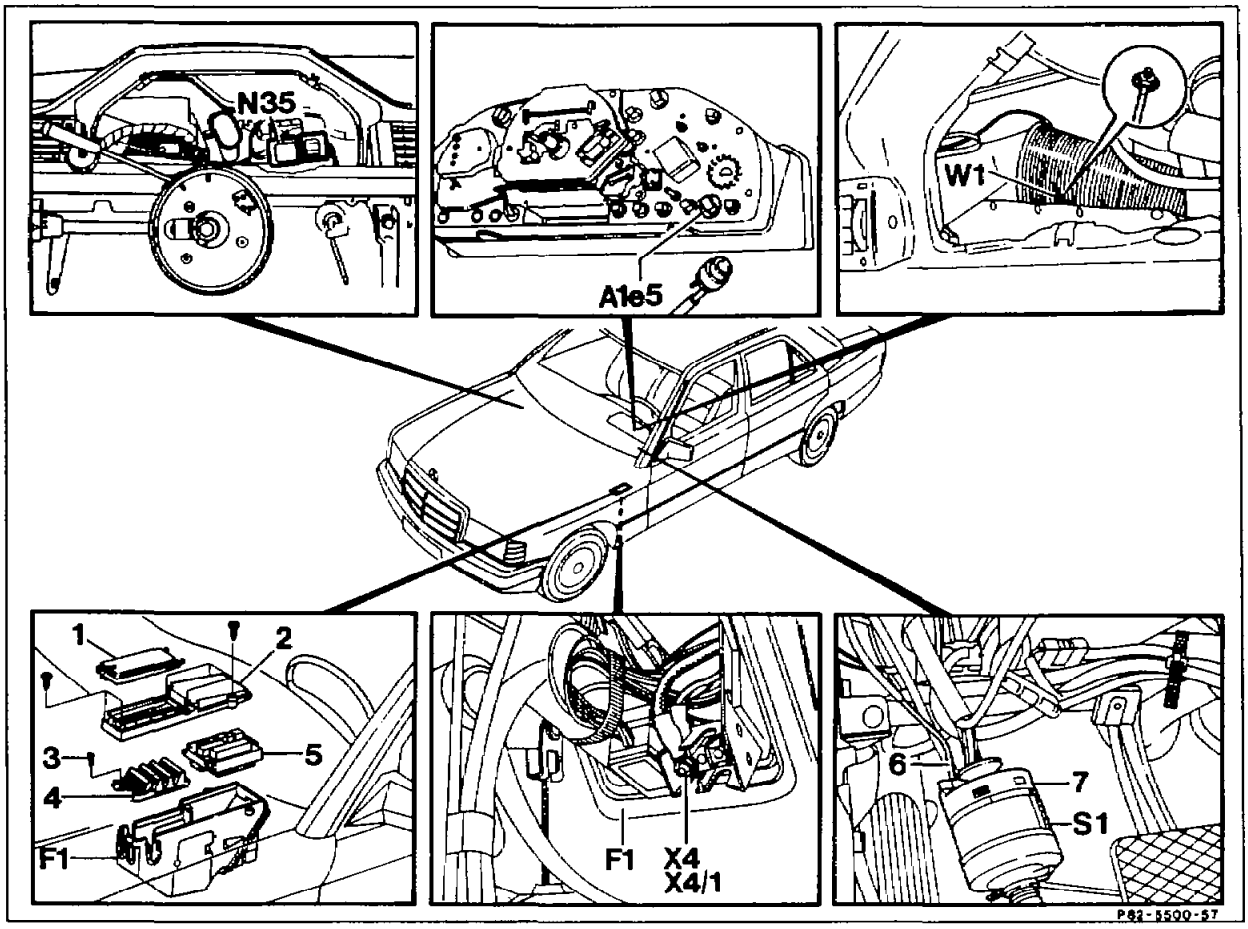

Covers (1 and 2) of fuse and relay box (F1)	remove, install (54–1255, step 1).
Phillips screw (3)	unscrew, screw in.
Fuse carrier (4)	raise, place back in position (step 2).
Fuse and relay box (F1)	press apart, release relay holder (5) and raise (step 3).

Daytime driving lamp control unit (N35)	screw onto holder behind instrument cluster (step 4). **Note** If vehicle not fitted with holder, install holder.
12-pin coupling of daytime driving lamp wiring harness (6) at daytime driving lamp control unit (N35)	connect (step 5).
Ground cable (brown) at grounding point (W1) . .	connect (step 6).
Bulb from base of alternator charge indicator/ warning lamp in instrument cluster (A1e5)	remove and insert into base of daytime driving lamp wiring harness (6) (step 7).
Base of daytime driving lamp wiring harness (6)	insert into instrument cluster (A1e5).
Instrument cluster	install (54–6015).
Daytime driving lamp wiring harness (6)	run to fuse and relay box (F1) (step 8).
Cable (red) of daytime driving lamp wiring harness (6)	connect to terminal block X4, X4/1, terminal 30 (step 9).
Remaining lacings of wiring harness in fuse and relay box (F1)	connect (step 10).
Bridge between fuses 3 and 4	remove (step 11).
Cable (grey/violet) and cable (grey/green) of daytime driving lamp wiring harness (6)	run to exterior lamp switch (S1) (step 12).
Contact jacks K and P30 in exterior lamp switch coupling (7)	remove, insulate and tie back (step 13).
Contact jack of cable (grey/violet)	press into terminal K (step 14).
Contact jack of cable (grey/green)	press into terminal 57 (step 15).
Fuse and relay box (F1)	assemble (step 16).
Function check	perform (step 17).
Further installation is performed in the reverse order.	

1 Remove both covers from fuse and relay box (54–1255).

2 Detach fuse carrier and raise.

3 Press apart fuse and relay box (arrows) and detach relay holder and raise.

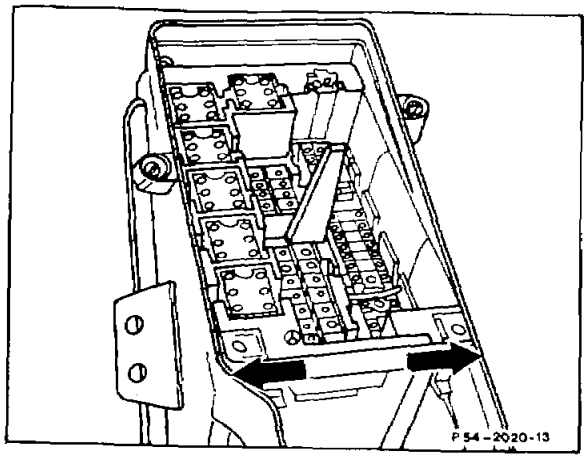

4 Screw daytime driving lamp control unit (N35) onto the holder behind the instrument cluster.

Note
If vehicle not fitted with holder, install holder.

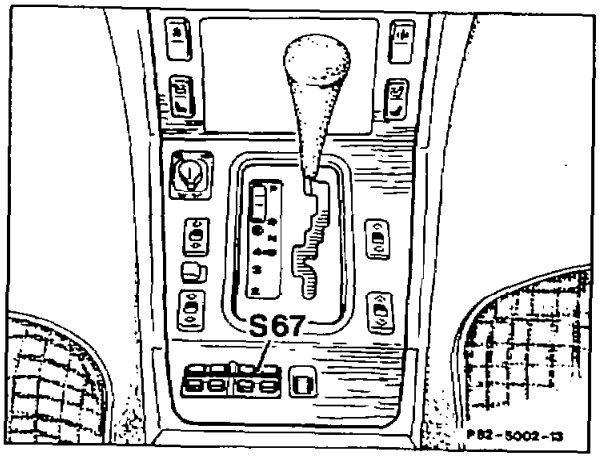

5 Plug 12-pin coupling of wiring harness into daytime driving lamp control unit (N35).

6 Connect ground cable (brown) to grounding point (W1).

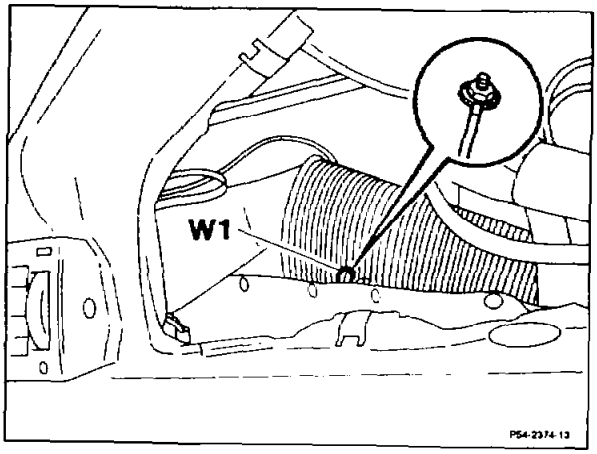

7 Withdraw base for alternator charge indicator/warning lamp (A1e5) at instrument cluster, remove bulb and insert into base of wiring harness. Then, insert base into instrument cluster.

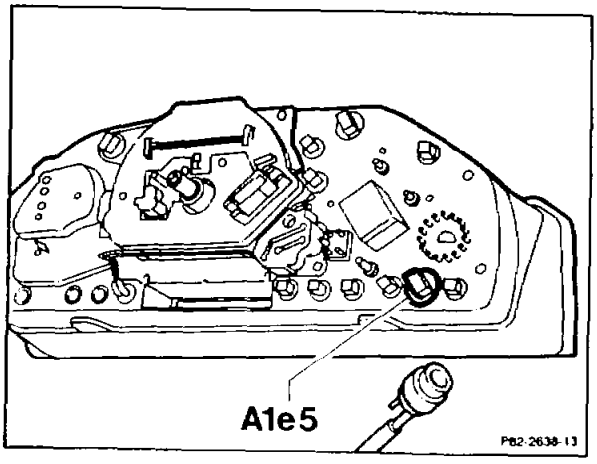

8 Run daytime driving lamp wiring harness to fuse and relay box.

9 Connect cable (red) to terminal block (X4 or X4/1), terminal 30.

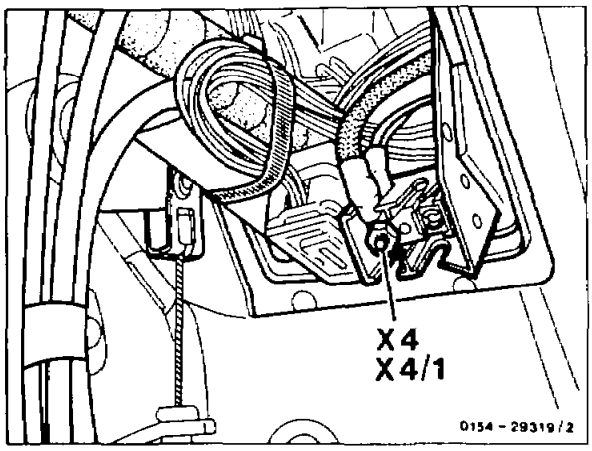

10 Connect cables to fuse and relay box.

- Black/red violet cable to fuse 5, output terminal 15
- Yellow cable to fuse 14, input terminal 56b
- Grey cable to fuse 3, output terminal 58R
- Grey cable to fuse 8, output terminal 58L
- Grey/green cable to fuse 4, input terminal 58N

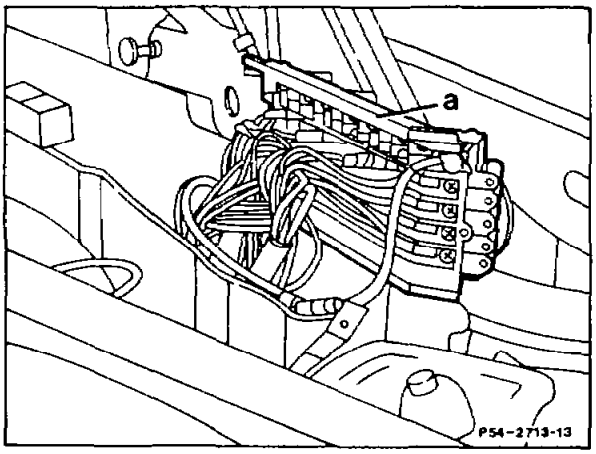

11 Remove the bridge (arrow) between fuse 3, terminal 58R and fuse 4, terminal 58N.

a To exterior lamp switch, terminal 58R
b To exterior lamp switch, terminal K30
c To exterior lamp failure monitoring unit, terminal 58R
d To exterior lamp switch, terminal NSE

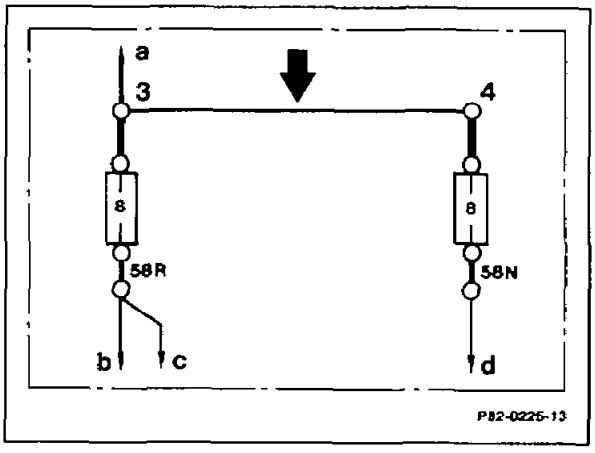

12 Run cable (grey/violet) and cable (grey/green) to exterior lamp switch (S1).

13 Remove contact jack K and P30 from exterior lamp switch coupling, insulate and tie back.

14 Press contact jack of cable (grey/violet) into terminal K.

15 Press contact jack of cable (grey/green) into terminal 57 of exterior lamp switch coupling.

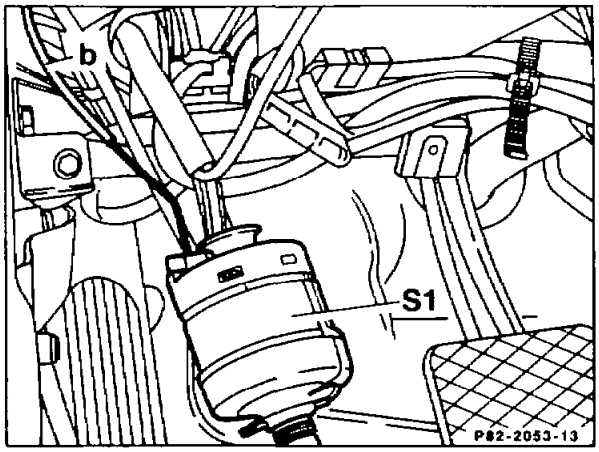

16 Attach relay holder and fuse carrier and fit on cover of fuse and relay box.

17 Start engine to check operation.
The following lamps must light up:
parking lamp, tail lamp, low beam and license plate lamps.

18 Assemble the remaining parts in the reverse order.

B. Canada version

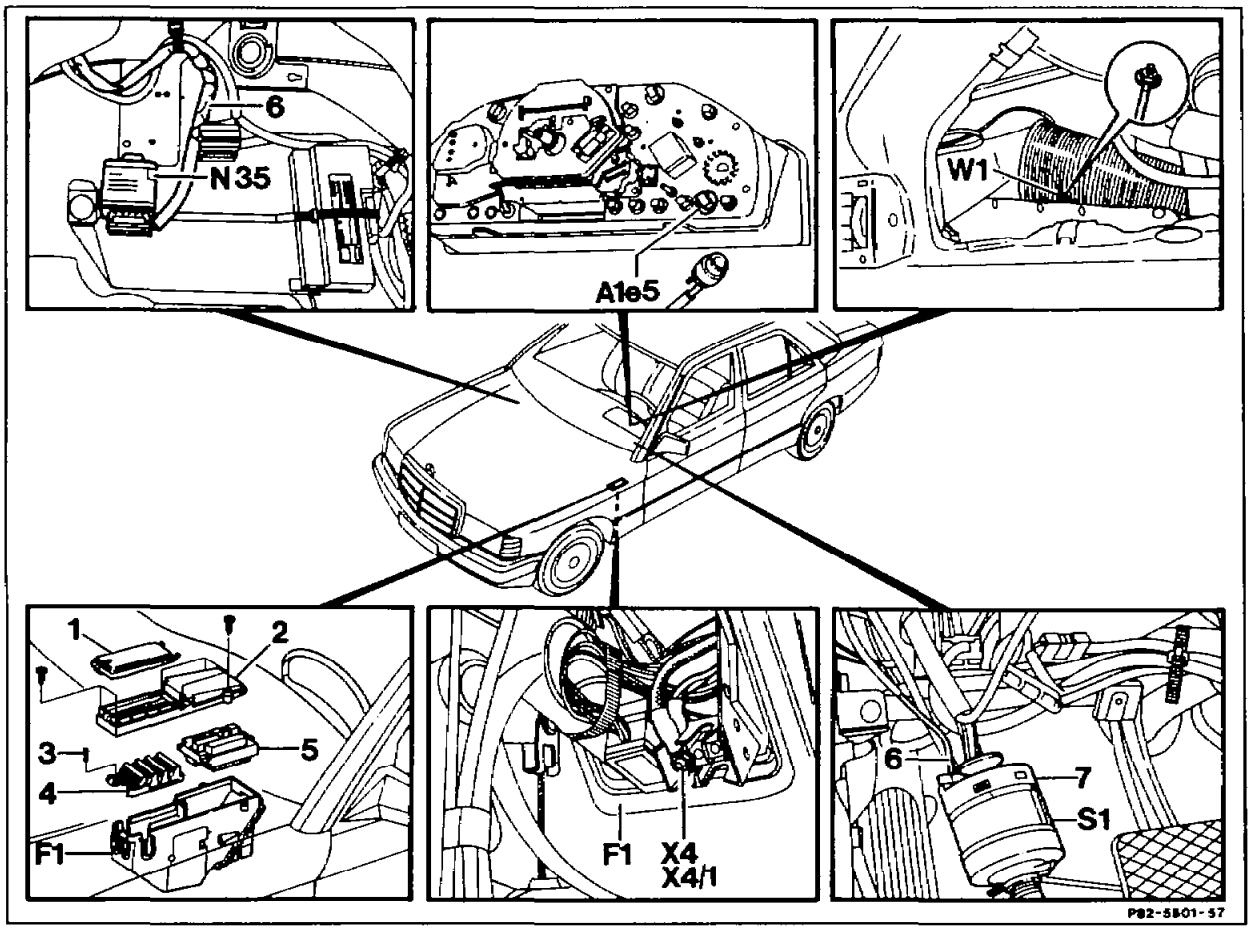

Right foot rest	remove, install.
Covers (1 and 2) of fuse and relay box (F1)	remove, install (54–1255, step 1).
Phillips screw (3)	unscrew, screw in.
Fuse carrier (4)	raise, place back in position (step 2).
Fuse and relay box (F1)	press apart, detach relay holder (5) and raise (step 3).
Daytime driving lamp control unit (N35) in right footwell	screw onto retaining plate (step 4).
	Note Hole is provided in retaining plate.
Daytime driving lamp wiring harness (6)	route (step 5).

12-pin coupling of daytime driving lamp wiring harness (6) at daytime driving lamp control unit (N35)	plug in (step 6).
Ground cable (brown) and cable (blue) to instrument cluster opening	run (step 7).
Ground cable (brown) to grounding point (W1)	connect (step 8).
Bulb in base of alternator charge indicator/warning lamp in instrument cluster (A1e5)	remove and insert into base of daytime driving lamp wiring harness (6) (step 9).
Base of daytime driving lamp wiring harness (6)	insert into instrument cluster (A1e5).
Instrument cluster	install (54–6015).
Daytime driving lamp wiring harness (6) to fuse and relay box (F1)	run (step 11).
Cable (red) of daytime driving lamp wiring harness	connect to terminal block (X4, X4/1), terminal 30 (step 12).
Wiring in fuse and relay box (F1)	connect (step 13).
Cable (grey/violet) of daytime driving lamp wiring harness (6) to exterior light switch (S1)	lay and press contact jack into free terminal K2 of exterior lamp switch coupling (step 14).
	Note Connection K2 must be fitted to exterior lamp switch; install new exterior lamp switch (S1) with connection K2 if necessary.
Fuse and relay box (F1)	assemble.
Function check	perform (step 16).

Assemble remaining parts in the reverse order.

1 Remove both covers from fuse and relay box (54–1255).

2 Detach fuse carrier and raise.

3 Press apart fuse and relay box (arrows) and detach relay holder and raise.

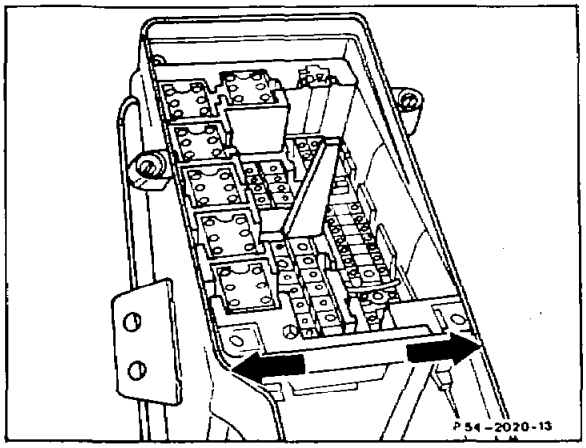

4 Screw daytime driving lamp control unit (N35) onto retaining plate in right footwell.

Note
Hole is provided in retaining plate.

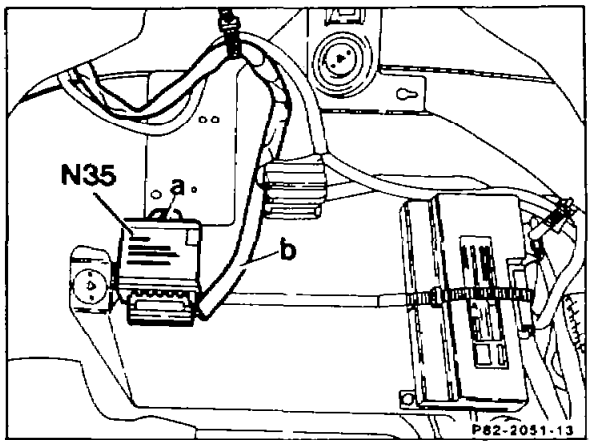

5 Lay daytime driving lamp wiring harness from right to left over heater box and secure with existing cable straps.

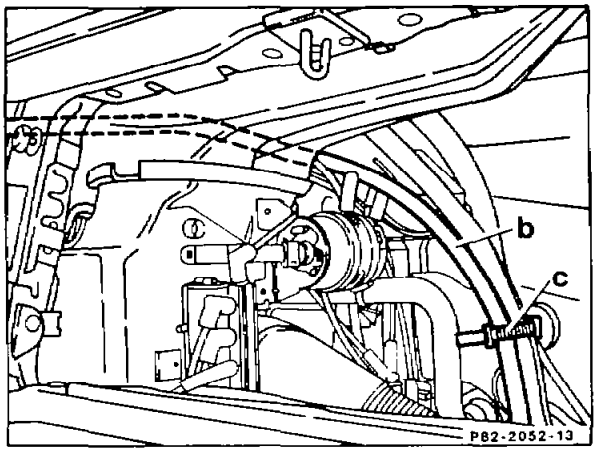

6 Connect 12-pin coupling of wiring harness to daytime driving lamp control unit (N35).

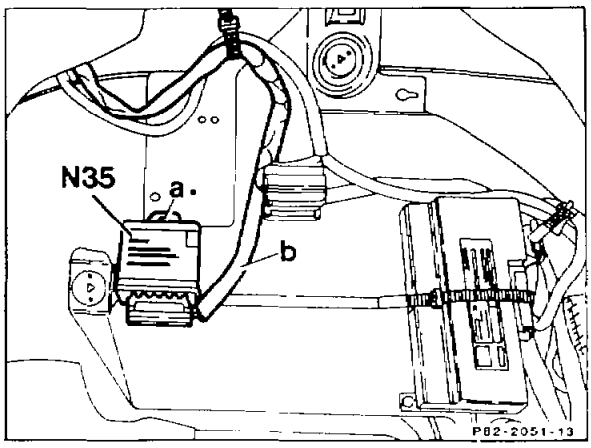

7 Lay ground cable (brown) and cable (blue) with lamp base to instrument cluster cutout.

8 Connect ground cable (brown) to grounding point ((W1).

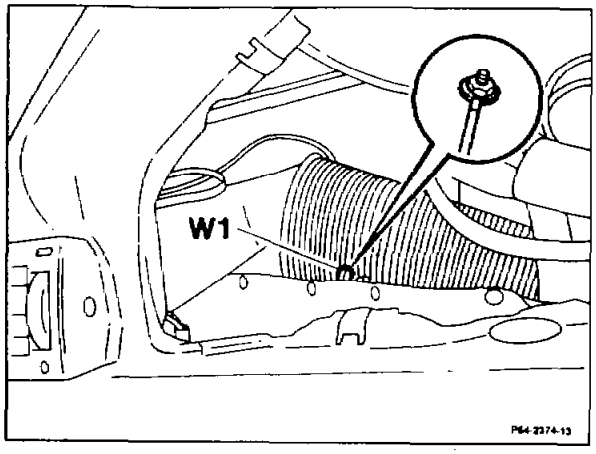

9 Withdraw base for alternator charge indicator/warning lamp (A1e5) at instrument cluster. Remove bulb and insert into base of wiring harness. Then, insert base into instrument cluster.

10 Install instrument cluster (54–6015).

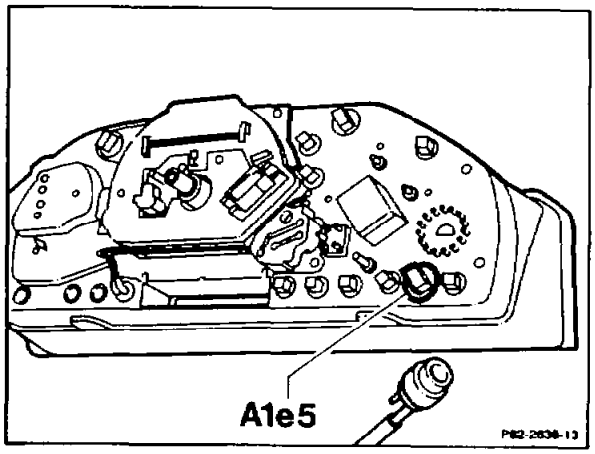

11 Lay remaining lacings of daytime driving lamp wiring harness to fuse and relay box.

12 Connect cable (red) to terminal block (X4 or X4/1), terminal 30.

13 Connect wiring to fuse and relay box.

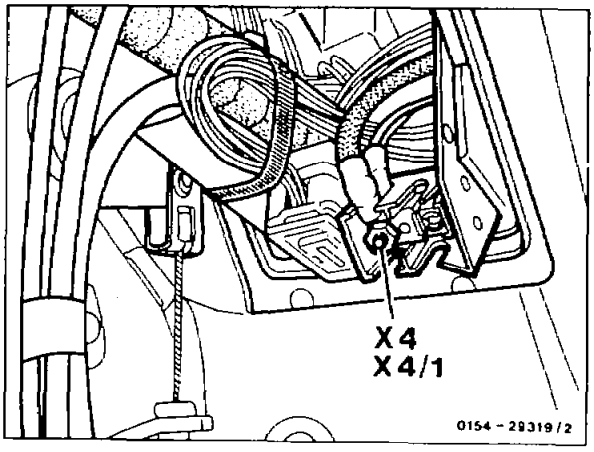

- Grey cable to fuse 3, input terminal 58R
- Grey/red cable to fuse 3, output terminal 58R
- Black/red violet cable to fuse 5, output terminal 15
- Grey/white cable to fuse 8, ouput terminal 58L
- Yellow cable to fuse 14, input terminal 56b
- White cable to fuse 15, input terminal 56a

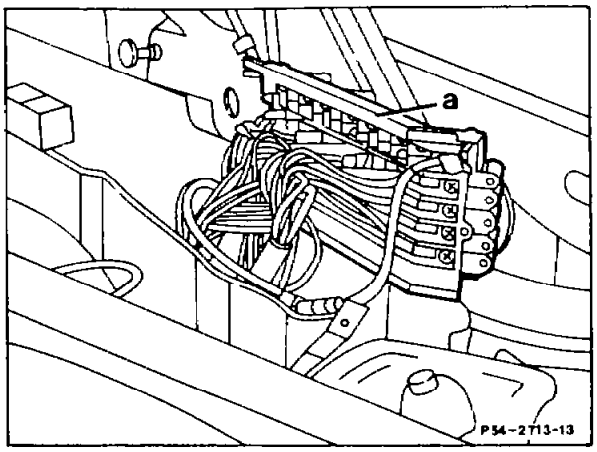

14 Run cable (grey/violet) to exterior lamp switch (S1) and press contact jack into free terminal K2 of rotary lamp switch coupling.

Note
Exterior lamp switch must be fitted with connection K2; install new exterior lamp switch with connection K2, if necessary.

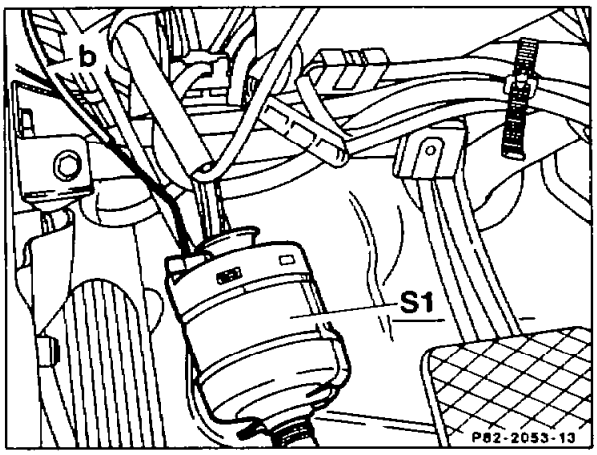

15 Attach relay holder and fuse carrier and fit on cover of fuse and relay box.

16 Start engine to check operation.
The following lamps must light up:
tail lamp, low beam, license plate lamps, instrument lighting and marker lamps.

17 The remaining parts are assembled in the reverse order.

82–0255 Removing and installing trunk lamp switch

Preceding work:
Parcel shelf removed (68–458) version up to 07/85.
Trim on rear pillar removed (68–449) version up to 07/85.

Operation no. of operation texts and work units or standard texts and flat rates:
82–1520, 82–1521

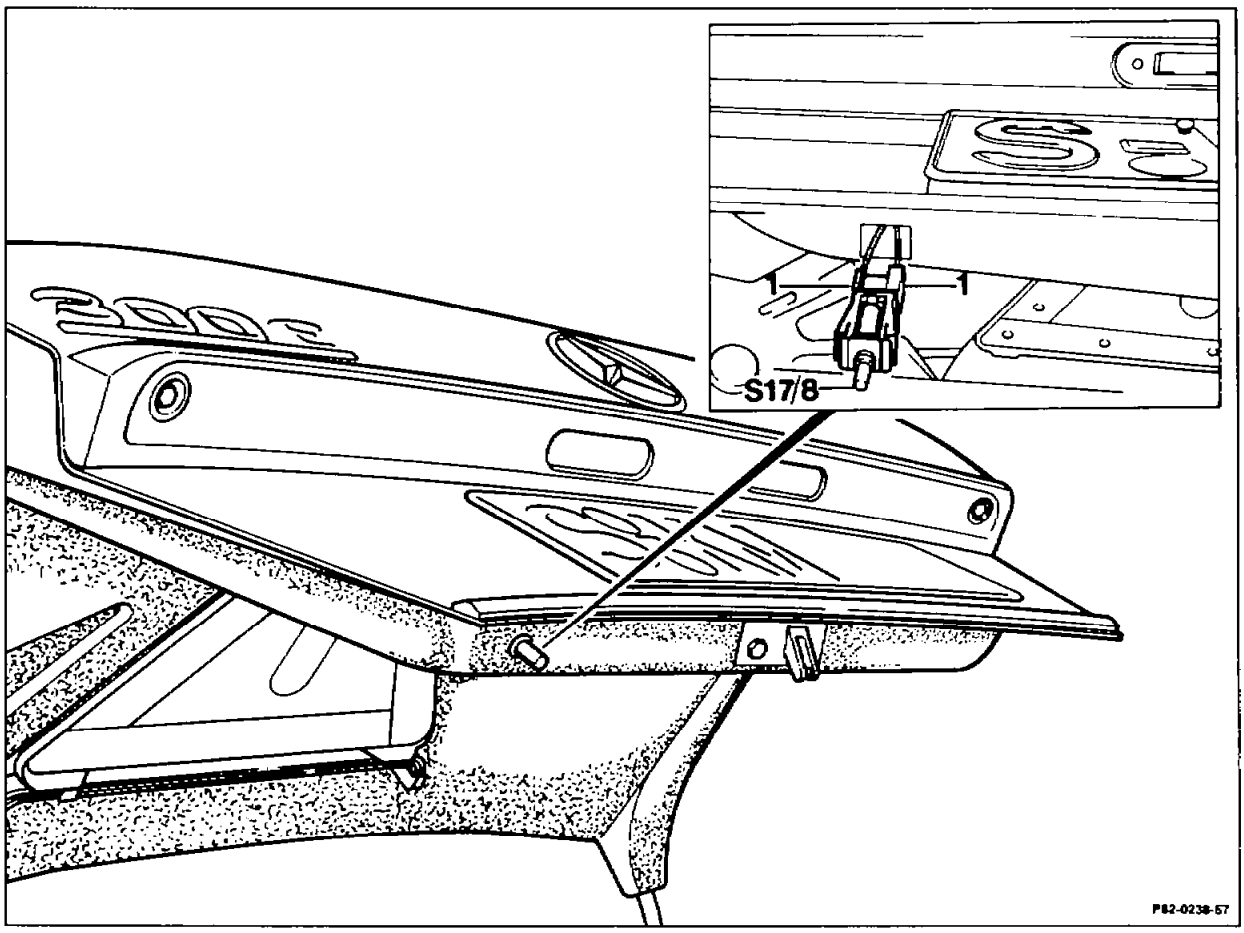

Version as of 08/85

Trim of trunk lid	remove, install (as of 08/89).
Trunk lamp switch (S17/8)	unclip, clip in place (arrow).
Electrical connection (1)	disconnect, plug in.

Note
As of 11/87 the trunk lighting can be switched off manually at the switch by pulling the pin.

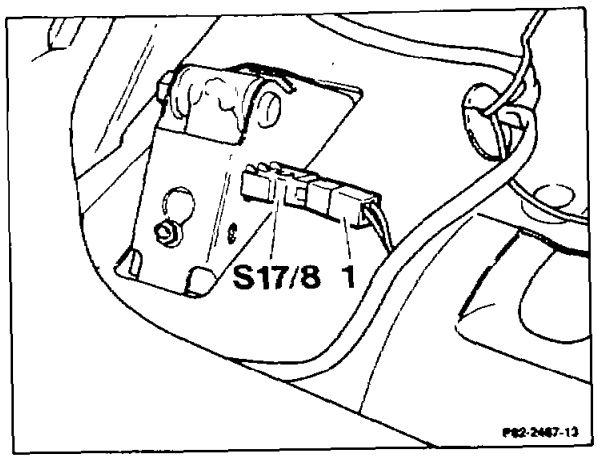

Version up to 07/85

Electrical connection (1)	disconnect, plug in.
Trunk lamp switch (S17/8)	unclip, clip in place.

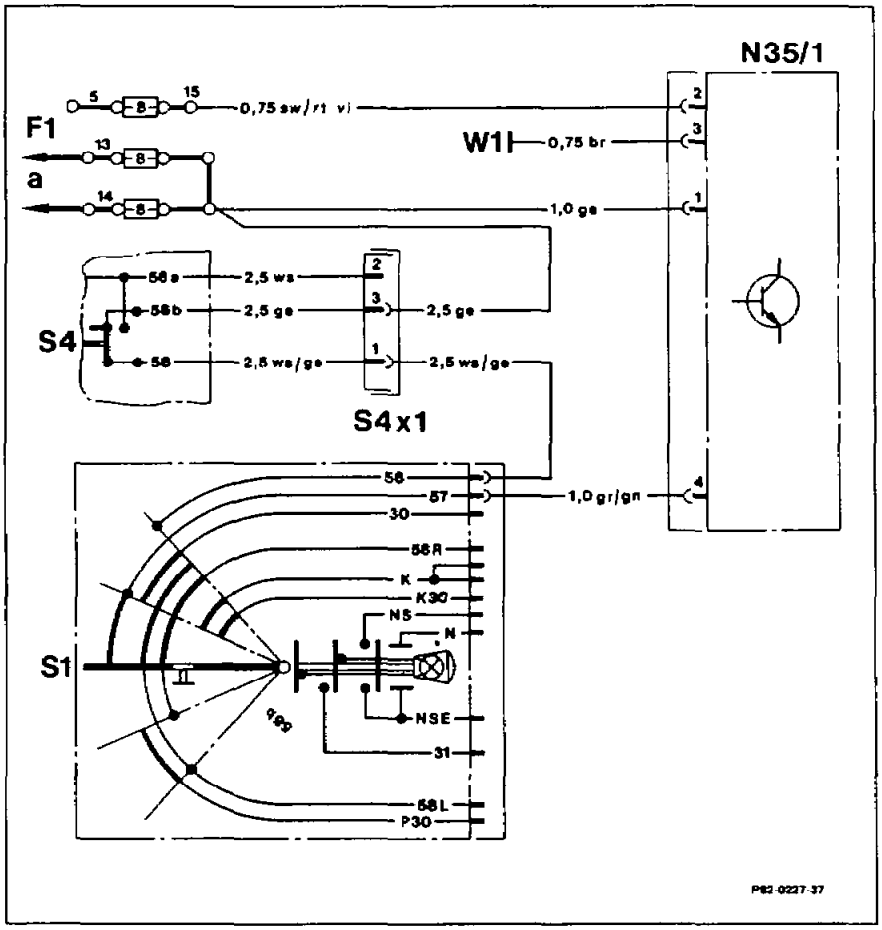

Wiring diagram of city driving lamp

F1	Fuse and relay box	S4x1	Plug connection, combination switch
N35/1	City driving lamp control unit (GB)	W1	Main ground (behind instrument cluster)
S1	Exterior lamp switch	a	To headlamp unit, low beam
S4	Combination switch		

Note

From 10/86 up to 08/89 models for the United Kingdom had to be equipped with a city driving lamp (statutory requirement).

Function

The city driving lamp is switched on with ignition starter switch in position 2 and exterior lamp switch turned to the parking light setting.

The electronics in the city driving lamp control unit (GB) (N35/1) controls the output voltage to the bulbs so that the car is driven with dipped beam headlamps at 10% of their normal brightness.

The city driving lamp control unit (GB) (N35/1) is attached to the cruise control bracket below the plastic cover in the right footwell on the driver's side.

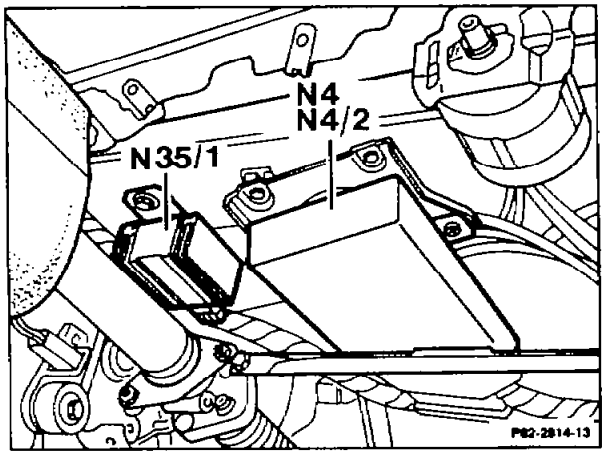

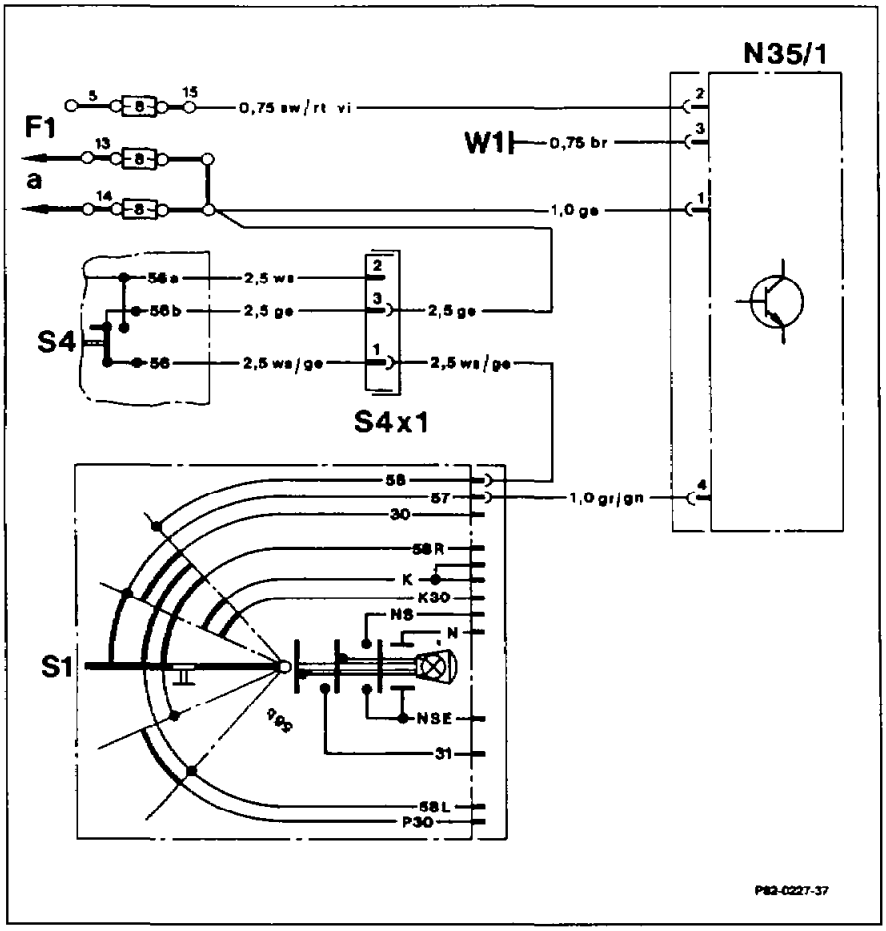

Wiring diagram of city driving lamp

F1	Fuse and relay box	S4x1	Plug connection, combination switch
N35/1	City driving lamp control unit (GB)	W1	Main ground (behind instrument cluster)
S1	Exterior lamp switch	a	To headlamp units, low beam
S4	Combination switch		

Note

If a low beam bulb fails when using the city driving lamp, this is indicated by the bulb failure indicator lamp in the instrument cluster lighting up weakly (glowing). When low beam is selected, the indicator lamp then lights up with full intensity.

A. Testing voltage at input of city driving lamp control unit (GB) (N35/1)

Cover below instrument panel	remove (68–150).
Connector at city driving lamp control unit (GB) (N35/1)	unplug.

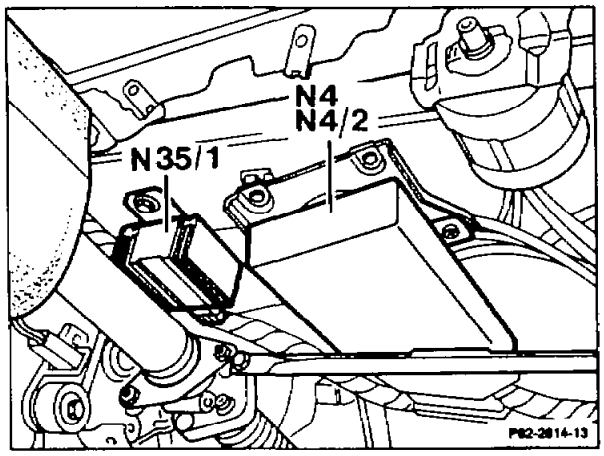

Multimeter	connect. Positive to contact 2 (terminal 15), negative to contact 3. Ignition starter switch in key position 2. Specification: battery voltage.
If specification is not achieved	test wiring for open circuit on basis of wiring diagram; rectify any open circuit.
If specification is achieved	plug in connector at city driving lamp control unit (GB) (N35/1) and continue with test step B.

B. Testing voltage at left-hand headlamp

Coupling at left-hand headlamp	unplug.
Multimeter	connect. Positive to 5 (terminal 56b), negative to contact 2. Exterior lamp switch (S1) in position1. Specification: approx. 5 volts.

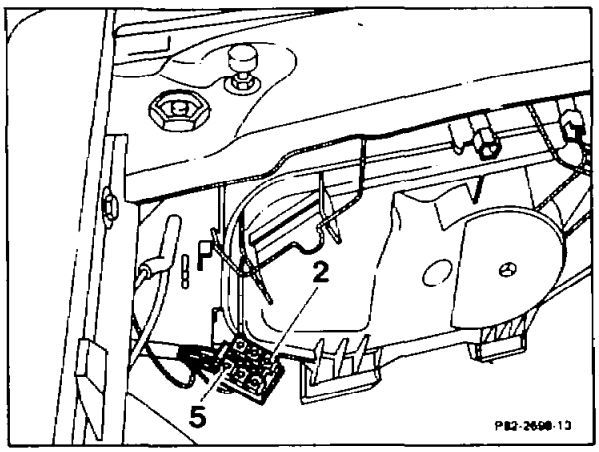

If specification is not achieved	test wiring for open circuit on basis of wiring diagram; rectify an open circuit.
Wiring	in order; replace city driving lamp control unit (68) (N35/1).
Coupling at left-hand headlamp	plug in.
Cover below instrument panel	install (68–150).

Special tool

201 589 00 99 00
15 54

Commercially available tester

Multimeter	e.g.	Sun DMM-5 or Avometer 2003

82–1130 Adjusting front lighting

Operation no. of operation texts and work units or standard texts and flat rates:
82–1130

Adjustment table (sizes in cm for test area at 10 m distance from headlamp)

Type of vehicle	The vehicle should be laden as follows for the setting	Setting "e" in cm Main headlamps	Fog lamps
Passenger cars, of which the top edge of the reflectors of the headlamps is not higher than 135 cm above ground level.	With one person or 75 kg on the driver's seat and vehicle otherwise unladen (unladen weight*)	10	10

* The unladen weight is the weight of the vehicle ready for the road with completely filled, installed fuel tanks, including the weight of all equipment carried on board when driving (e. g. spare wheels and tyres, spare parts, tools, vehicle jack, fire extinguisher).

A. Preparations for adjustment

The vehicle should be parked on a level surface for adjusting the headlamps. Even minor unevennesses at the point at which the vehicle is parked may falsify the setting. The specified inflation pressure should be maintained at all the tyres. The vehicle should be laden in accordance with the figures stated in the adjustment table, and then slowly driven onto the parking area in order not to alter the spring setting when applying the brakes.

Adjust the headlamps individually by switching off or covering over the other headlamps. Whenever possible, perform adjustments in an enclosed area and which is fairly dark since the accuracy of the adjustment can be influenced by wind (movement of test surface) and by other light sources. Use a headlamp setting device whenever possible. Closely follow the relevant instructions for the equipment. If no headlamp setting device is available, the headlamps can be set by using an adjustable, flat test surface.

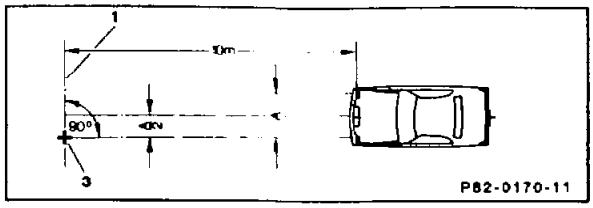

If need be, the test surface can also be drawn on a wall. The wall should be light in colour and be provided with a central mark and a boundary line which is vertical in relation to the longitudinal axes of the vehicle. If the settings shown in the adjustment table are used, the distance between the test surface and the headlamp to be adjusted should be 10 meters.

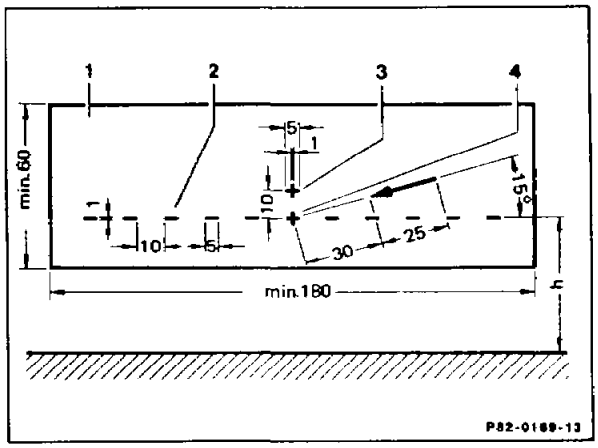

Test surface (Sizes in cm)

1 Test surface
2 Boundary line
3 Central mark
4 Breakpoint
min. = minimum

Where the light beam is sharply inclined, e. g. in the case of fog lamps, select the distance of 5 meters; in this case the specified setting should be halved. The central mark of the test surface must be in the plane parallel to the vehicle longitudinal center plane which passes through the center of the headlamp to be adjusted. The boundary line must be set to height h parallel to the vehicle base for each headlamp to be adjusted.

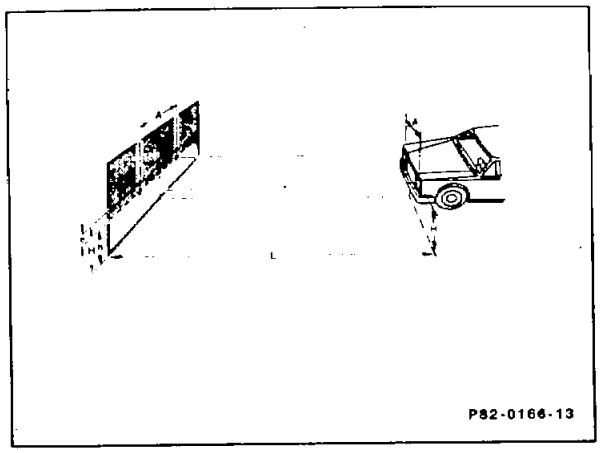

Note for vehicles with headlamp range control

Before setting the headlamps, run engine briefly and build up vacuum by blipping throttle several times. Following this, move regulating switch from "0" to "3" and check whether the headlamps adjust. If the headlamps to do not adjust, rectify fault.

Check headlamp setting in the basic position "0" of the regulating switch and adjust to correct setting, if necessary.

Models with self-levelling suspension

After the car is laden properly, the engine of models with self-levelling suspension on the rear axle must be run at a moderate speed for about 30 seconds. Move car forward and backward in order to properly adjust the axle.

B. Main headlamps

The main headlamps are set according to the asymmetrical dipped beam. The light/dark cutoff should touch the boundary line to the left of the center. The intersection point between the left (as far as possible horizontal) and the right rising part of the light/dark cutoff should be on the vertical line through the central mark. The left-hand half of the headlamp may be covered over and uncovered several times to make it easier to determine the intersection point.

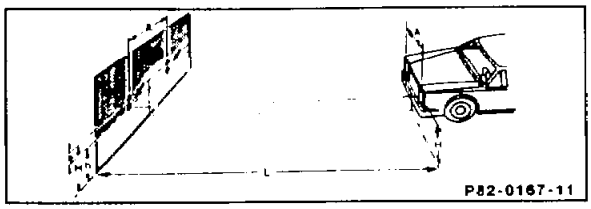

The center of the high beam must be located on the central mark. Variations of 20 cm to the right or left and of 15 cm up or 10 cm down are permissible in each case for headlamps where high and low beam are adjusted together.

C. High beam headlamps

The center of the light beam of the high beam headlamp must be on the central mark.

Note
The high beam headlamp is switched on together with high beam.

H = Height of headlamp center above base in cm
h = Height of boundary line of test surface above base in cm
e = Setting in cm (see setting table)
e = H – h

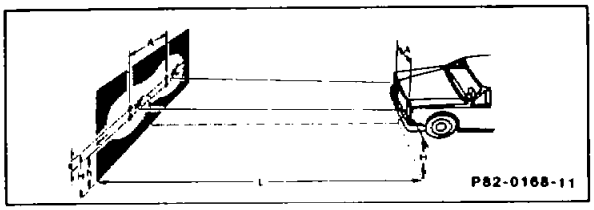

D. Fog lamps

The highest point of the light/dark cutoff in the case of fog lamps should touch the boundary line and should run as horizontally as possible across the minimum width of the test surface. The fog lamps should be adjusted laterally so that the light distribution is as symmetrical as possible to the vertical line through the central mark.

H = Height of fog lamp center above base in cm
h = Height of boundary line of test surface above base in cm
e = Setting in cm (refer to setting table)
e = H – h

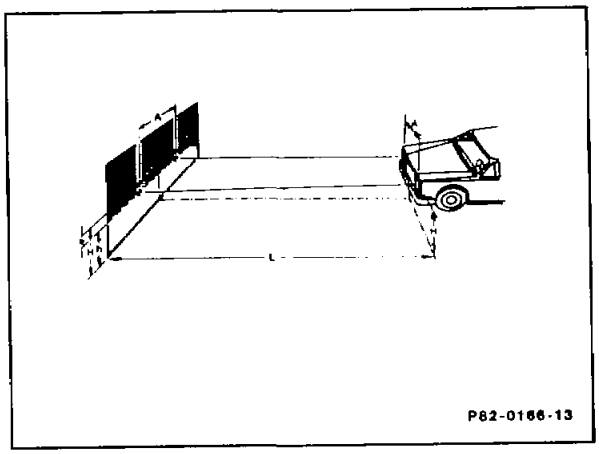

E. General on checking headlamp adjustment (USA version as of model year 94)

Headlamp adjustment

The lamp units have auxiliary devices for adjusting the headlamps and checking the adjustment.

- Bubble (1) (level) for height adjustment
- Gauge (2) for lateral adjustment

The bubble (1) is permanently attached to the reflector and aligned with the optical axis of the headlamp.

The scale has a "0" mark in the middle as well as eight increment marks in both directions.

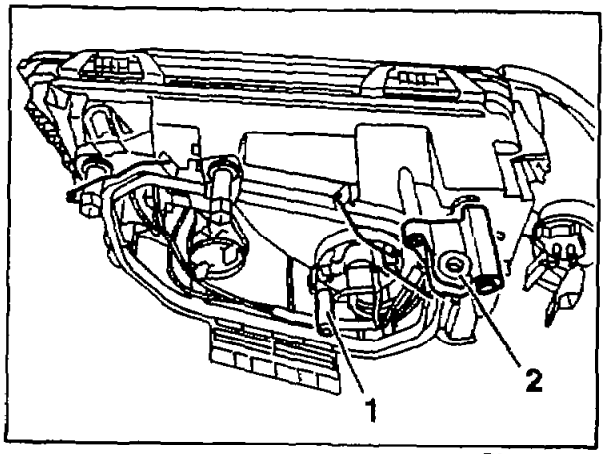

P82-6378-13

Lateral adjustment

A gauge (2) with scale and "0" mark is attached to the housing for checking the lateral adjustment.

Preparation for adjustment

- Correct air pressure in tires.
- Fill fuel tank or load trunk accordingly.
- Slowly drive vehicle onto level surface so that the vehicle level is not changed when the brakes are applied.
- Load driver seat with 75 kg or one person.
- Remove air intake housing for engine (on engines 104, 119 only)
- Remove cover on lamp unit

F. Basic headlamp adjustment (USA version as of model year 94)

Preceding work:
General on checking headlamp adjustment (USA version as of model year 94) according to section E.

Height adjustment

Turn adjustment screw (4) so that the air bubble (1) is at the "0" mark.

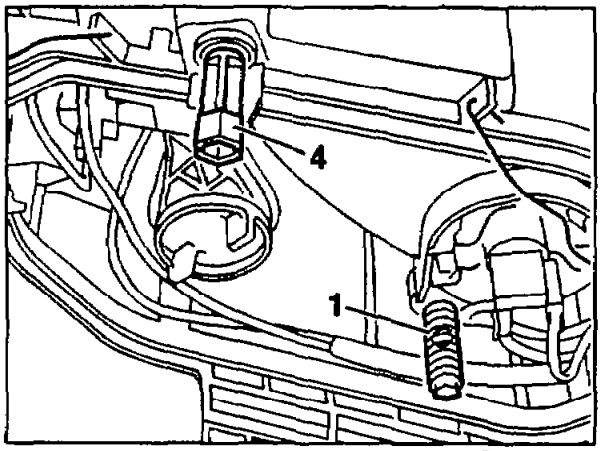

P82-6376-13

Lateral adjustment

Use headlamp adjustment unit and turn adjustment screw (3) accordingly. Press control sleeve (arrow) upward, set to "0" mark and allow to catch.

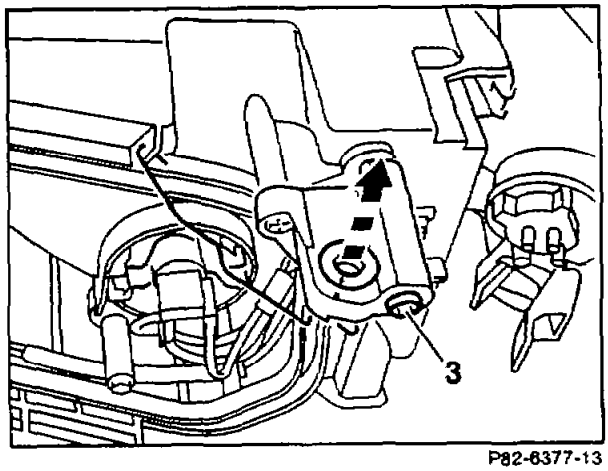

P82-6377-13

82-1201 Removing and installing bulbs of headlamp unit

Preceding work:
Remove intake air cowl (09-0060)
Model 124.034/036 and engine 104.

Operation no. of operation texts and work units or standard texts and flat rates:
82-1201

A. Standard version and (USA) as of model year 94

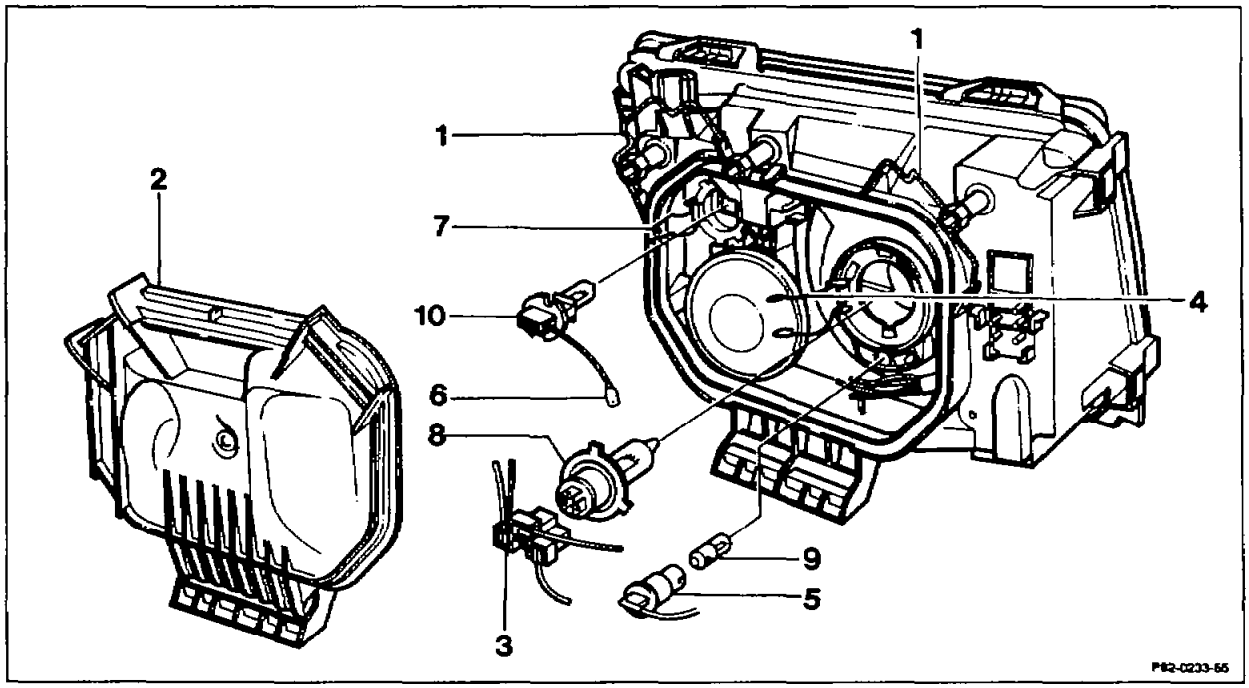

⚠
On models with self-levelling suspension, the return line from level control to oil reservoir (arrow) must be detached first of all when working on the left-hand lamp unit.

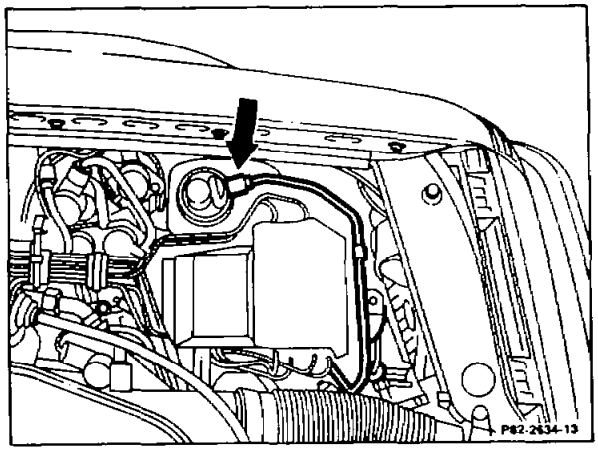

Do not grasp the bulbs with naked fingers but use a non-greasy soft cloth.

Ensure that the bulb is correctly located when installed.

Clip (1)	fold open, close.
Cover (2)	take off, fit on.

Bulb for headlamp

Electrical connection (3)	unplug, plug in.
Fixing clip (4)	release, clip in place.
Bulb (8)	remove, insert.

Bulb for parking lamp (except USA)

Socket (5)	remove, insert.
Bulb (9)	remove from bayonet seat of socket (5), insert.

Bulb for fog lamp or high beam headlamp (model 124.036)

Electrical connection (6)	unplug, plug in.
Fixing clip (7)	release, clip in place.
H3 bulb (10)	remove, insert.

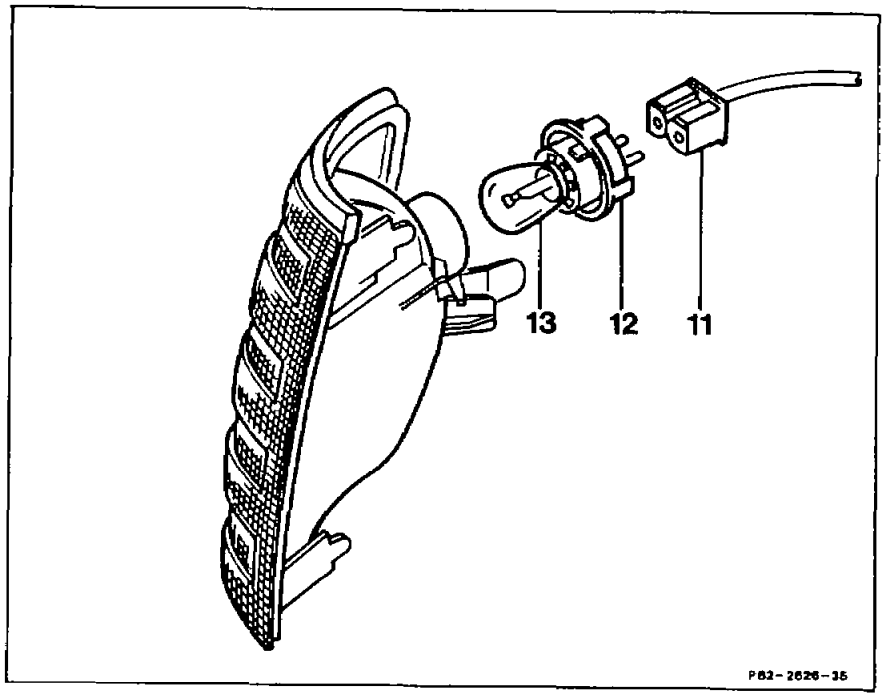

Bulb for turn signal lamp or turn signal lamp and *side marker lamp* USA

Electrical connection (11)	disconnect, reconnect.
Socket (12)	release by turning to left, fasten by turning to right.
Bulb (13)	remove from bayonett seat in socket (12), install.

B. USA version up to model year 93

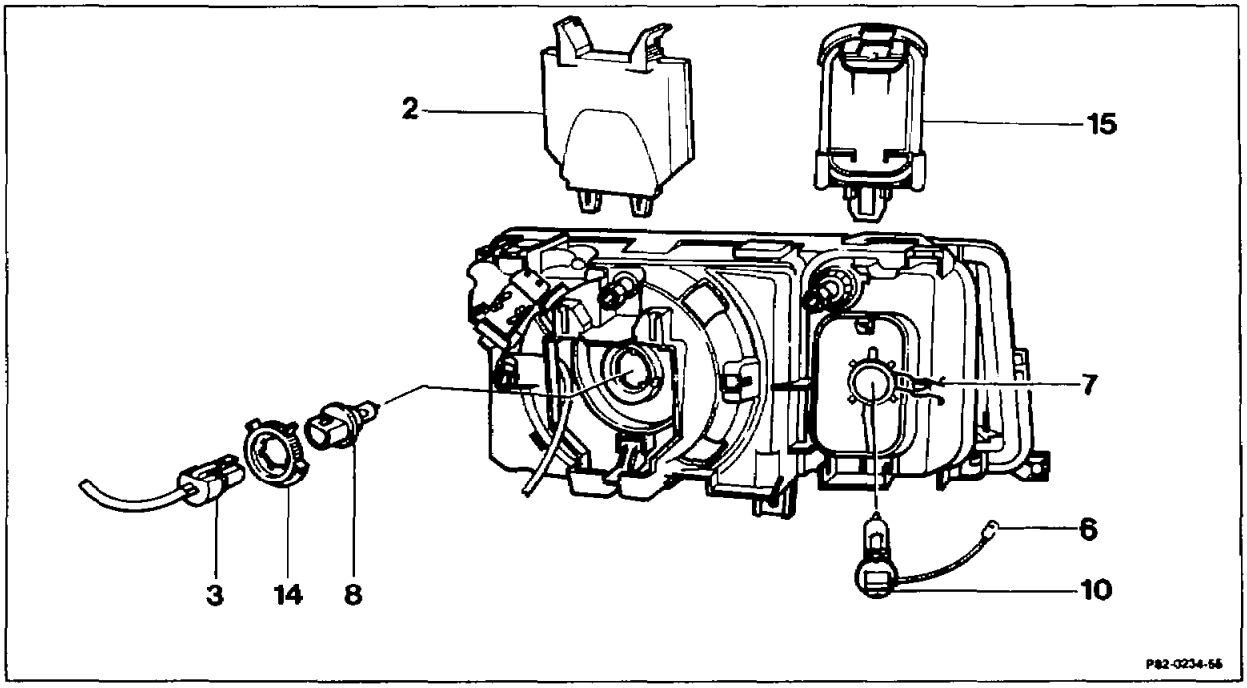

⚠
Do not touch the bulbs with bare fingers, but use a non-greasy soft cloth.

Ensure that the bulb is correctly located when installing.

Main headlamp with bulb

Cover (2)	remove upward, insert from above.
Electrical connection (3)	unplug, plug in.
Retaining ring (14)	remove, fit on.
Bulb (8)	remove, insert.

Bulb for fog lamp

Cover (15)	take off, fit on.
Electrical connection (6)	unplug, plug in.
Fastening clip (7)	unclip, clip in place.
H3 bulb (10)	remove, insert.

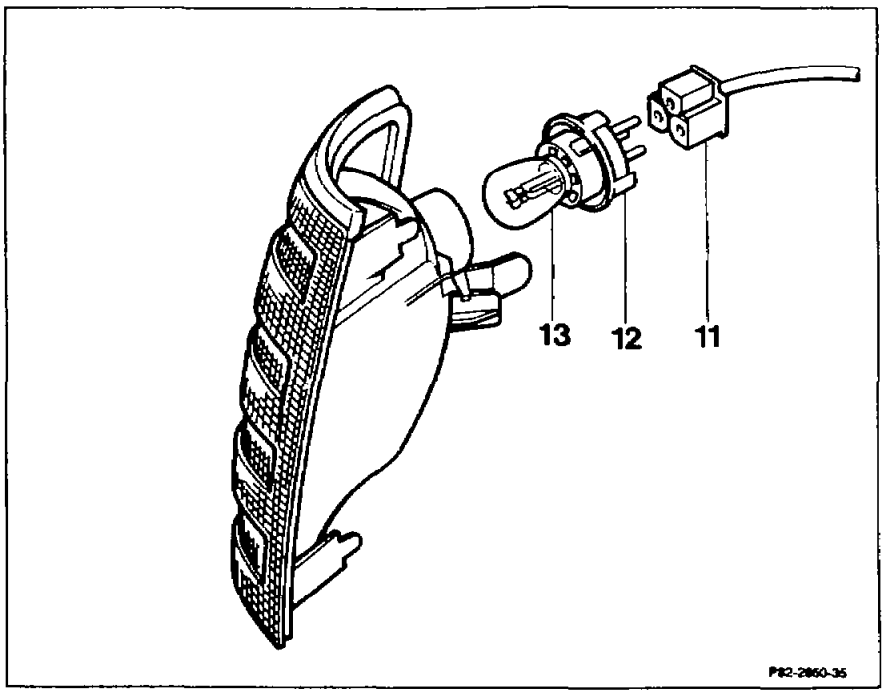

Bulb for turnsignal and side marker lamp

Electrical connection (11)	unplug, plug in.
Socket (12)	slacken by turning to the left, attach by turning to the right.
Bulb (13)	remove from bayonet seat of socket (12), insert.

82-1285 Removing and installing bulb for ashtray illumination

Operation no. of operation texts and work units or standard texts and flat rates:

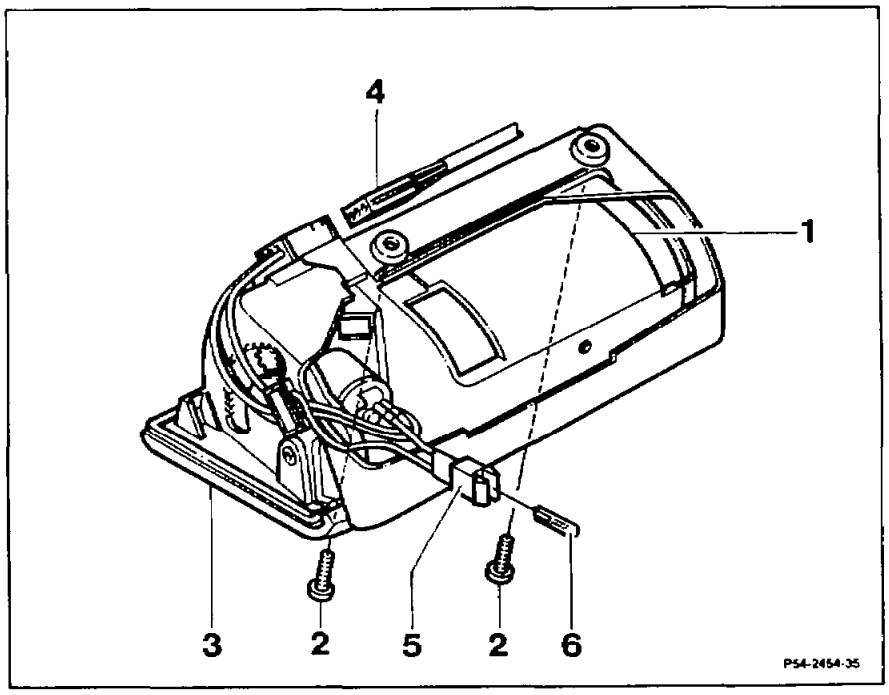

Insert	remove from ashtray (1), install.
	1st version: Press insert slightly into ashtray and release.
	2nd version: Push lever in front of cigar lighter in direction of arrow.
Screws (2)	unscrew, screw in.
Ashtray (3)	remove, insert.
Electrical connection (4)	unplug, plug in.
Socket (5) with bulb (6)	remove, insert.
Bulb (6)	remove from socket, insert.

82-1820 Removing and installing lens of headlamp unit

Preceding work:
Headlamp unit removed (82-4730).

Operation no. of operation texts and work units or standard texts and flat rates:
82-1720, 82-1770, 82-1820

(USA) and standard version

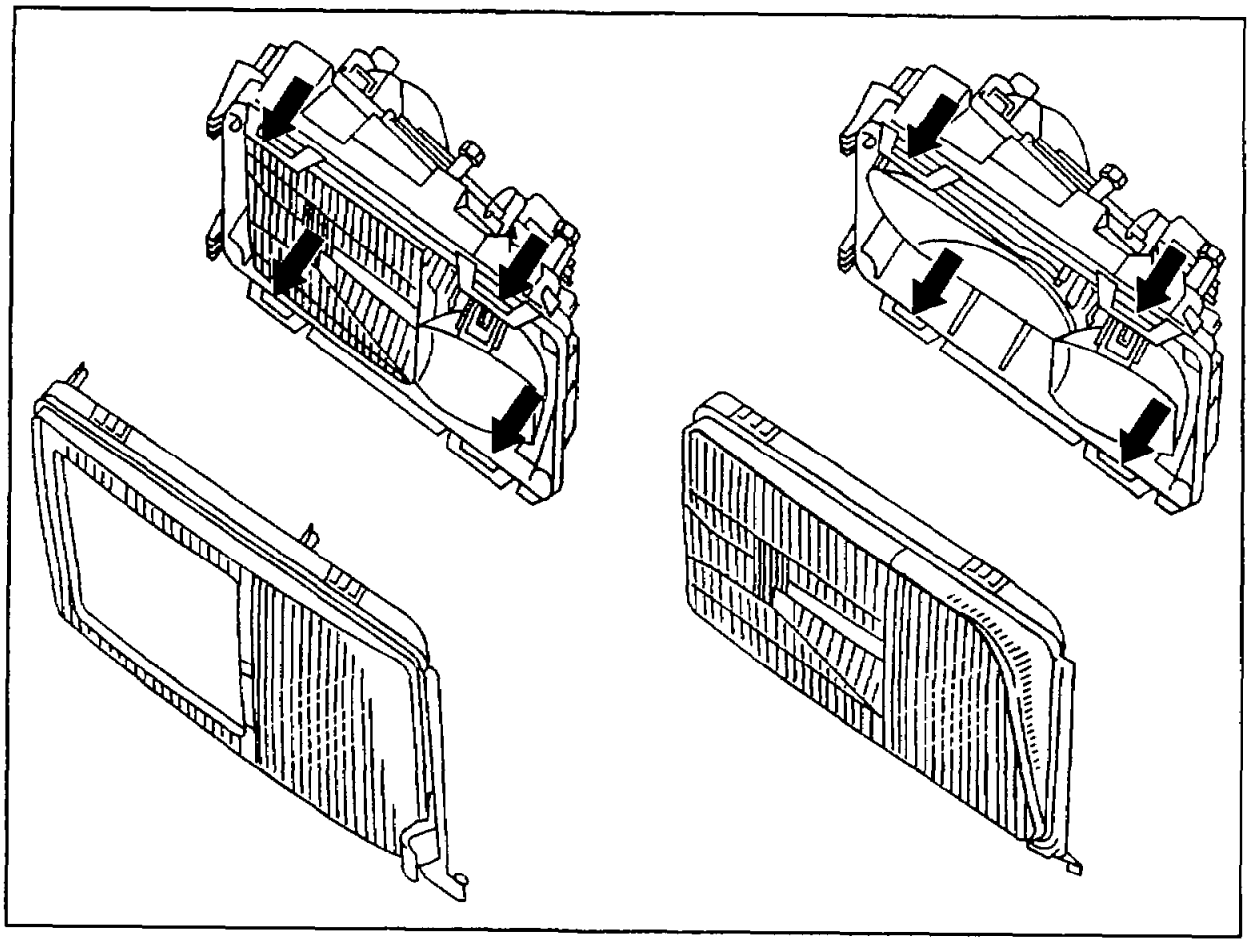

P82-6395-57

(USA) version up to model year 93

(USA) version as of model year 94 and standard version

Retaining clips (arrow) ..... unclip, clip in place.

Note
The retaining clips must be heard to engage when assembling.

Lens ..... take off, fit on.

Note
The lens forms a unit with the surround.

82-2850 Removing and installing headlamp reflector

Preceding work:
Headlamp unit removed (82-4730).
Lens of headlamp unit removed (82-1820).
Bulbs removed (82-1201).

Operation no. of operation texts and work units or standard texts and flat rates:
82-1850, 82-2830, 82-2840, 82-2990, 82-3000, 82-3010.

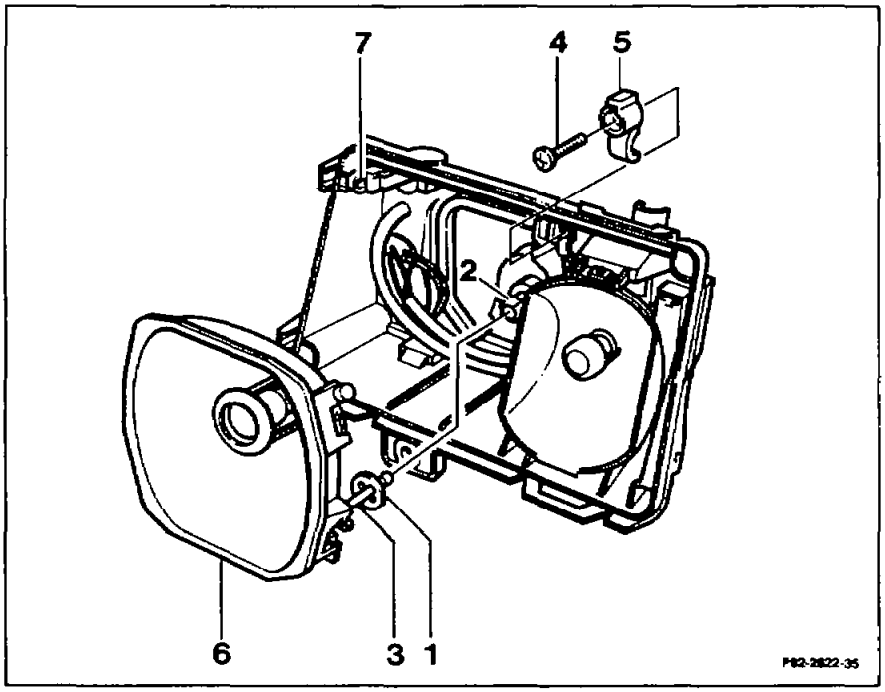

Red securing clip (1)	push back, fit on.
Headlamp range control adjusting element (2)	release by turning to the left, secure by turning to the right.
Tie rod (3) of headlamp range control	detach from headlamp range control adjusting element (2), attach.
Phillips screw (4)	unscrew, screw in.
Holder (5)	take off, fit on.
Reflector (6)	remove from mounting (7), replace.
After installing headlamp unit	adjust lighting (82-1130).

82-2930 Removing and installing fog lamp reflector or high beam headlamp reflector (model 124.036)

Preceding work:
Headlamp unit removed (82-4730).
Lens of headlamp unit removed (82-1820).
Bulbs removed (82-1201).

Operation no. of operation texts and work units or standard texts and flat rates:
82-1850, 82-2830, 82-2840, 82-2990, 82-3000, 82-3010.

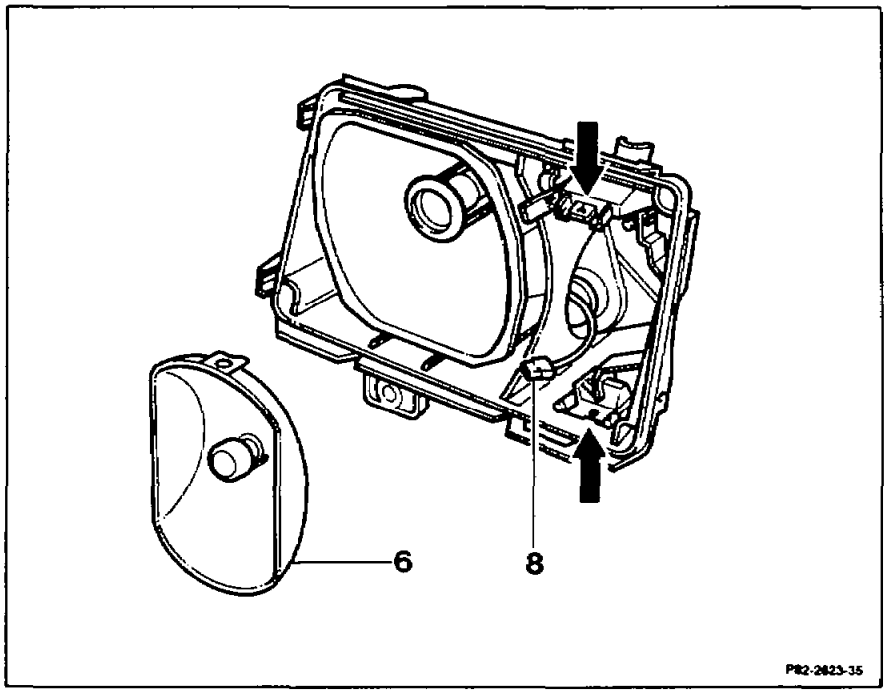

Ground connection (8)	unplug, plug in.
Retaining clips (arrows)	unclip, clip in place.
Reflector (6)	remove, insert.
After installing headlamp unit	adjust lighting (82-1130).

82-4011 Testing headlamp range control (except USA)

Preceding work:
Checking basic setting of headlamps (82-1130).

Operation no. of operation texts and work units or standard texts and flat rates:
82-4011

A. Checking adjustment range

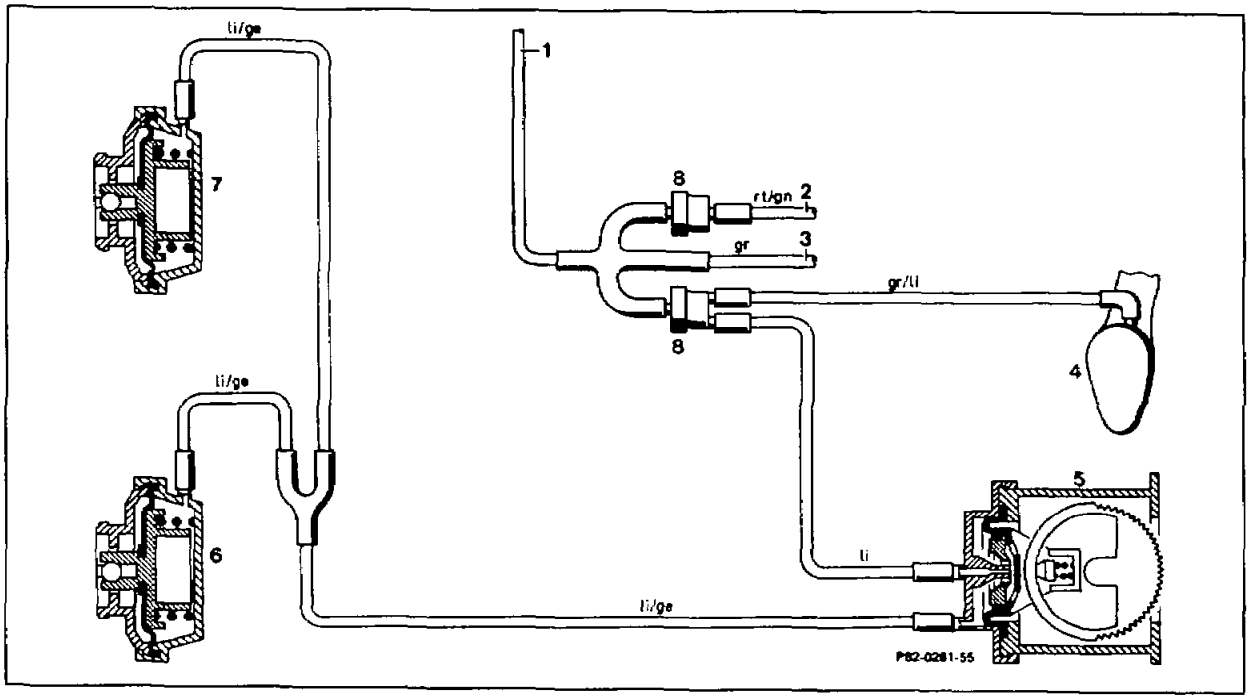

Diagram of vacuum-controlled headlamp range adjustment up to 08/89

1	Vacuum connection at engine	5	Regulating switch
2	Automatic heater control	6	Left headlamp positioning element
3	Economy	7	Right headlamp positioning element
4	Vacuum reservoir	8	Check valve

Diagram of vacuum-controlled headlamp range adjustment as of 09/89.

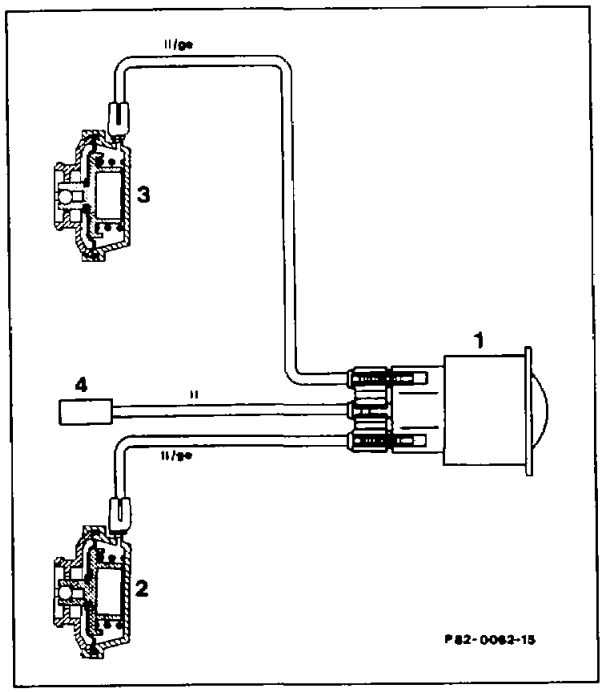

1 Regulating switch
2 Left headlamp adjusting element
3 Right headlamp adjusting element
4 Vacuum connection at engine (intake manifold)

Engine	run.
Regulating switch	move from position 0 to position 3; on vehicles with self-levelling suspension from position 1 Λ to position 2.
Bright/dark cutoff line of dipped beam	shifts from "A" to "B".

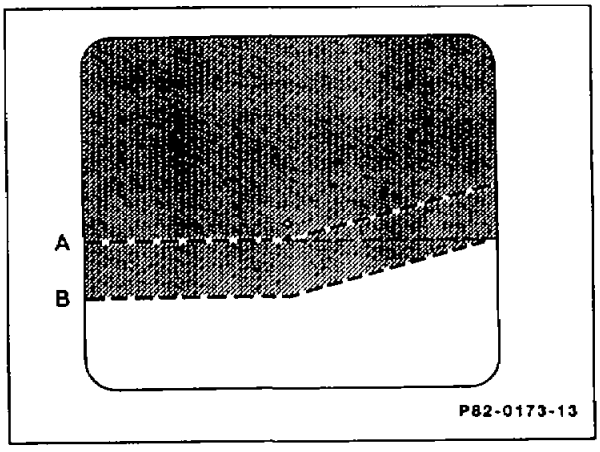

Knurled disc or measuring screen on headlamp beam adjuster	alter until adjusting line is in position "B".
Take reading of value on adjusting scale of headlamp beam adjuster	specification between A and B marking: 33 to 48 cm.
If these values are not reached	check vacuum, tester for vacuum 201 589 13 21 00.

Vacuum levels at headlamps or outlet of regulating switch

Position of regulating switch	Vacuum in mbar
without self-levelling suspension	**without** self-levelling suspension
0	400 ± 30
1	290 ± 30
2	200 ± 30
3	50 ± 30
with self-levelling suspension	**with** self-levelling suspension
1 Λ	400 ± 30
0	290 ± 30
1 V	200 ± 30
2	50 ± 30

If these values are not reached . . . . . check vacuum system for leaks.

Note as of 09.89
If the connecting bush is leaking, this can be replaced by an adapter.
To do this, shorten pneumatic line by about 50 mm. Insert adapter in place of the cutoff connection bush and fit on with hose connector (approx. 40 mm long).

If these values are reached . . . . . check ease of movement of reflectors and stroke of adjusting elements (steps 1–6).

Special tool

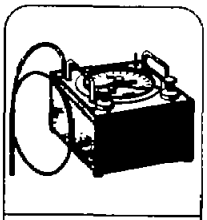

201 589 13 21 00
00 42 80

Checking ease of movement of reflector

1 Remove cover of headlamp unit and detach adjusting element from bayonet lock by turning 45° to the left.

2 Press red locking piece (2) off adjusting element (1) and pull adjusting element off the ball head of the tie rod.

3 Move reflector by hand and check whether it moves easily.

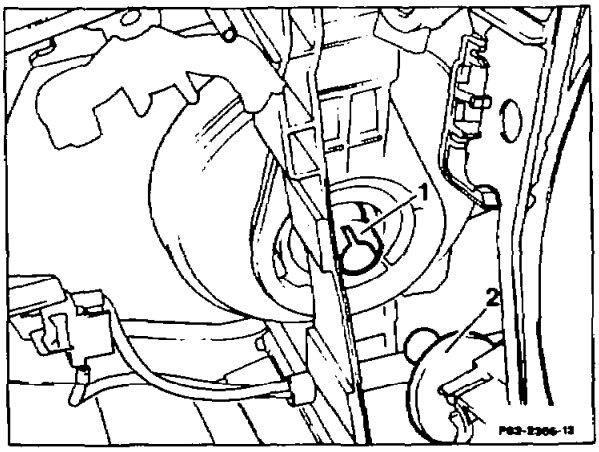

Checking stroke of adjusting element

4 Connect removed adjusting element to control line.

5 Build up vacuum of approx. 0.4 bar and move regulating switch from position 0 to position 3; on models with self-levelling suspension from position 1 Λ to position 2.

6 Measure the stroke (a) of the piston at the adjusting element. The stroke must be 3.2 ± 0.2 mm. If this value is not achieved, replace adjusting element.

Note

When installing adjusting element, do not forget to press on red locking piece again.

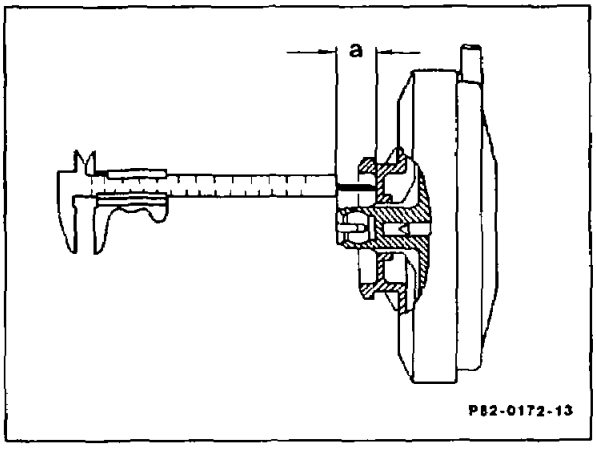

B. Function

The range of the headlamp can be varied with the regulating switch (arrow). The headlamp range is adjusted by means of vacuum-operated adjusting elements.

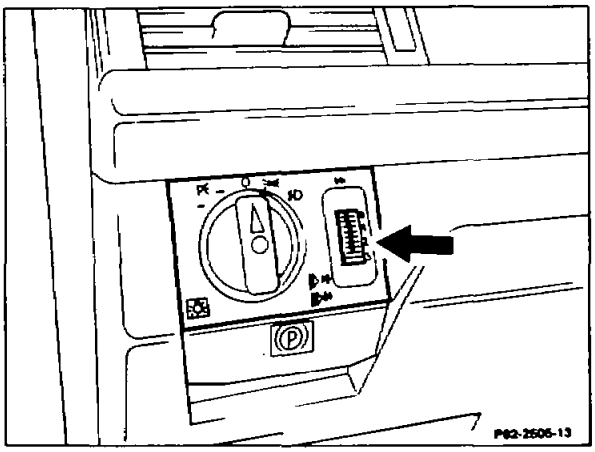

On cars with gasoline engines, the vacuum is tapped at the intake manifold and passed through a check valve to the regulating switch. A reservoir is necessary in order to assure an adequate vacuum supply over the entire engine speed range. The reservoir is connected in parallel to the regulating switch and housed in the front left wheelhouse behind the fire wall.

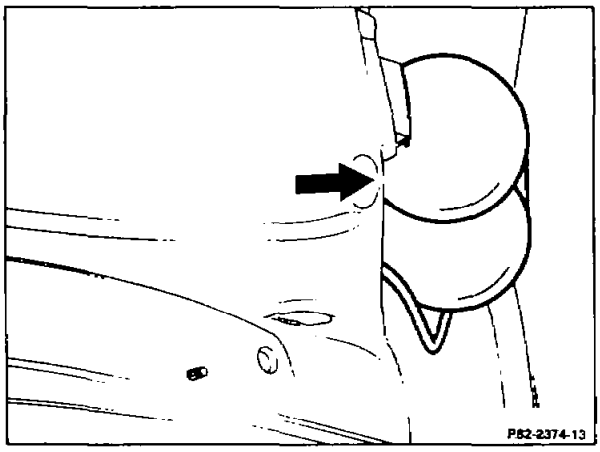

Note

As of 09/89 the vacuum lines are plugged in at the regulating switch (1) with quick connectors. A shutoff valve integrated in the regulating switch closes if there is a drop in the vacuum and prevents the reflectors being moved out of position. The regulating switch (1) is supplied with vacuum directly from the intake manifold. The reservoir and the check valve are no longer fitted.

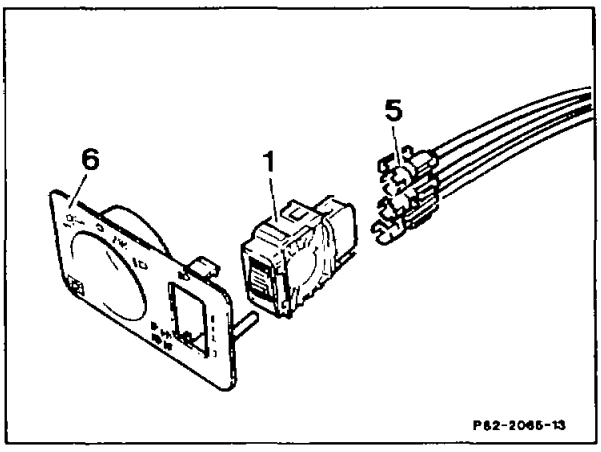

An adjusting element (4) with a maximum stroke of approx. 3 mm is located at each headlamp unit. The adjusting element is linked by means of a tie rod to the pivot-mounted reflector.

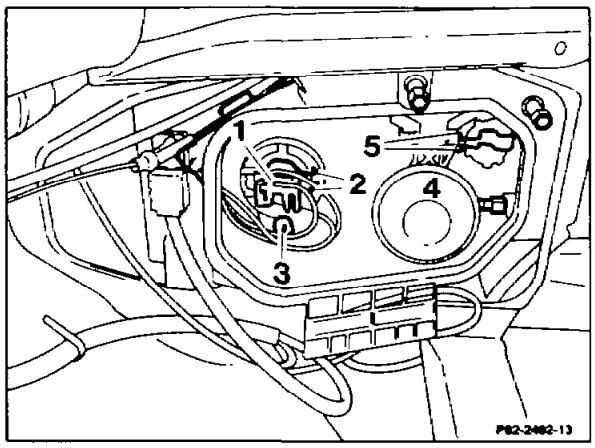

Models without self-levelling suspension

The regulating switch has the regulating stages 1, 2 and 3 in addition to the basic position "0". Maximum vacuum (approx. 0.4 bar) exists at the adjusting elements in the basic position and maintains the reflector in its basic setting. If the regulating switch is turned to positions 1, 2 and 3, a lower vacuum exists at the adjusting elements (table), the stroke is increased and the reflectors are tilted down out of the basic position by the following values:

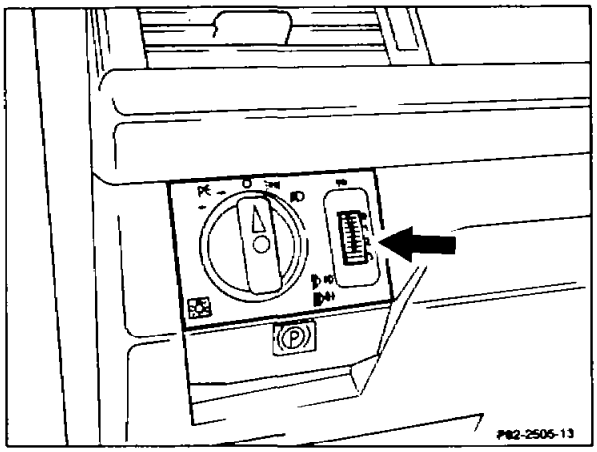

Position of regulating switch	Adjustment at positioning element in mm	Vacuum in mbar
1	0.95	290
2	1.70	200
3	3.00	50

Setting according to vehicle load

Position of regulating switch	Load of car
0	Front seats or seat occupied
1	Front and rear seats occupied
2	Front and rear seats occupied and load in trunk up to permissible rear axle load or
3	front seats occupied and max. load in trunk (max. permissible 100 kg) and, as need be, when towing a trailer.

Models with self-levelling suspension

The regulating switch has the positions 1 Λ (higher), 1 V (lower) and 2, in addition to the basic setting "0". In position 1 Λ the maximum pressure (approx. 0.4 bar) exists at the positioning elements and maintains the reflector in its position. In the other regulating stages a lower vacuum exists at the positioning elements (table), the stroke is greater and the reflectors are tilted down out of the basic position by the following values:

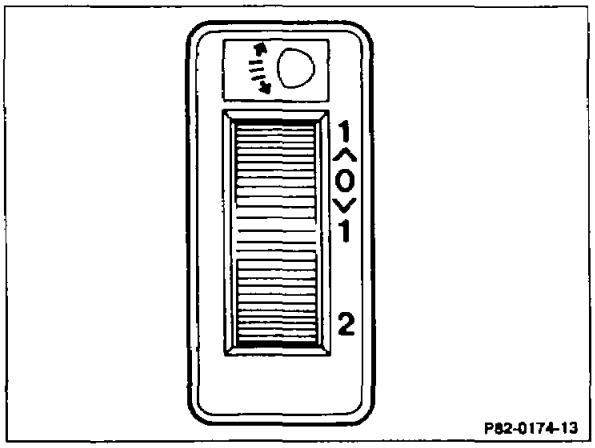

Position of regulating switch	Adjustment at positioning element in mm	Vacuum in mbar
1 Λ	0.0	0.40
0	0.95	0.29
1 V	1.70	0.20
2	3.00	0.05

Setting according to vehicle load

Position of regulating switch	Load of car
1 Λ	Rear seats occupied
0	Front seat or rear seats occupied
1 V	Front and rear seats occupied and load in trunk up to permissible rear axle load
	or
2	front seats occupied and max. load in trunk (max. permissible 100 kg), as need be when towing a trailer

82–4730 Removing and installing headlamp unit

Preceding work:
Remove intake air cowl (09–0060)
Model 124.034/036 and engine 104

Operation no. of operation texts and work units or standard texts and flat rates:
82–4712, 82–4722, 82–4732

Standard and (USA) version

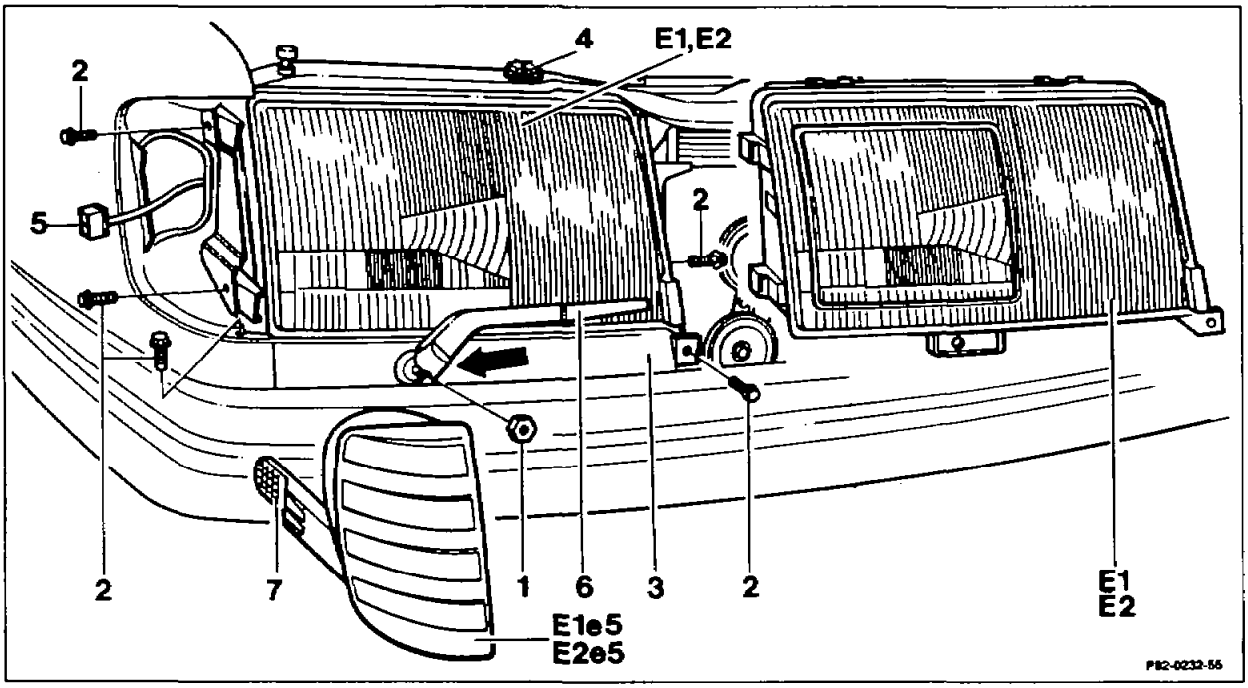

Vehicles with headlamp wash/wipe system

Cover on wiper arm (arrow)	open, close.
Hexagon nut (1)	unscrew, screw on.
Wiper arm (6)	take off, fit on.
Tube at wiper arm (6)	pull off, fit on.

All vehicles

Turnsignal lamp (E1e5, E2e5)	remove, install. To do this, release retaining bar (7) and withdraw turnsignal lamp to the front.
Electrical connection at turnsignal lamp (5)	unplug, plug in.
5 hexagon bolts (2)	unscrew, screw in.
Cover (3)	remove, install.

Locking insert (4)	turn 90° to the left and withdraw, insert and turn 90° to the right.
Electrical connection and vacuum line for *headlamp range control*	*disconnect, fit on.*
Headlamp unit (E1, E2)	remove, insert.
	Note When removing the right-hand headlamp unit on vehicles with double auxiliary fan, remove the flat springs upward and push the radiator with condensor back slightly.
Headlamp adjustment	check, correct if necessary (82–1130).

82–5161 Removing and installing licence plate lamp

Operation no. of operation texts and work units or standard texts and flat rates:
82–5161, 82–5162, 82–5163

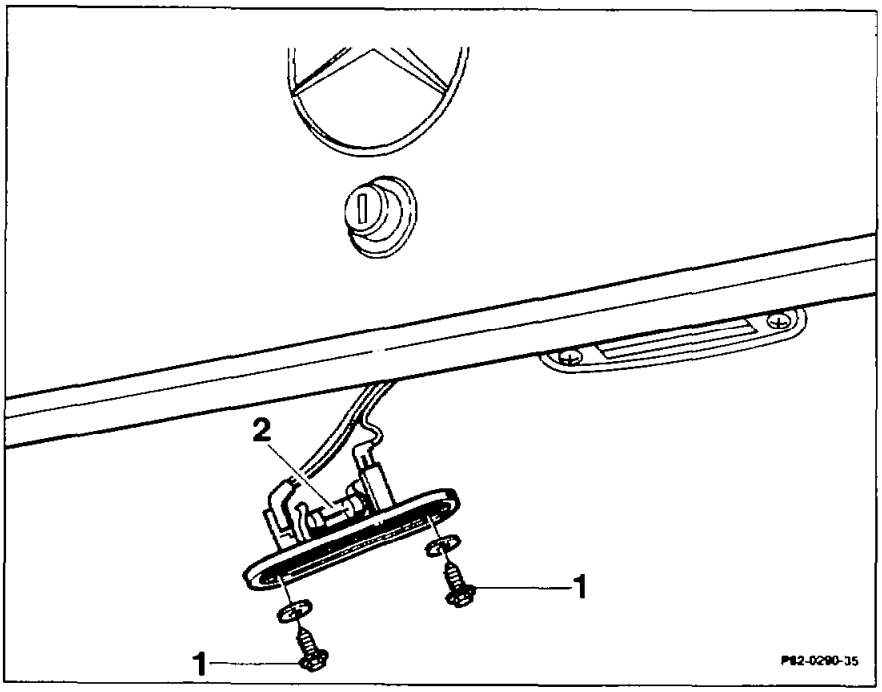

Hexagon screws (1)	unscrew, screw in.
Bulb (2)	remove from base, insert.

Note
When installing licence plate lamp, ensure seal is correctly inserted.

82–5375 Function of center high-mounted stop lamp (AUS), (USA), New Zealand

Operation no. of operation texts and work units or standard texts and flat rates:

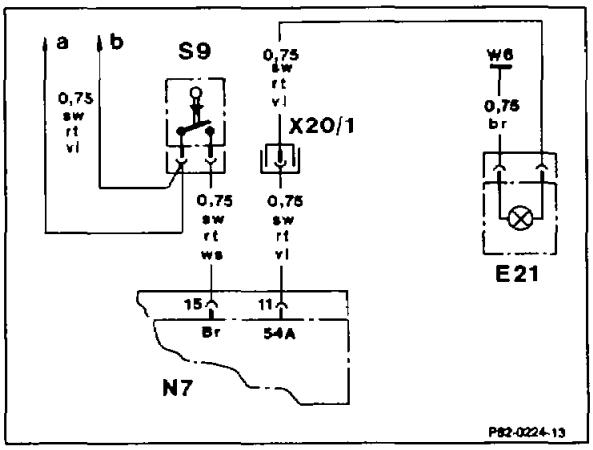

Up to model year 1987

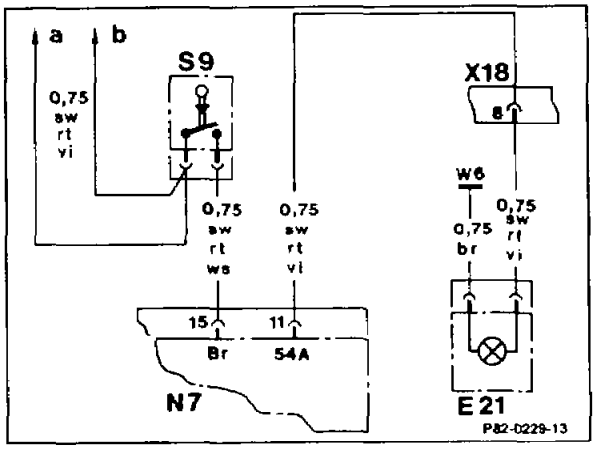

As of model year 1988

Wiring diagram of center high-mounted stop lamp (USA)

E21	Center high-mounted stop lamp	a	To fuse and relay box F1, fuse 5, terminal 15
N7	Exterior lamp failure monitoring unit	b	To Hall sensor, road speed B6
S9	Stop lamp switch		
X18	Plug connection, interior/taillamp wiring harness (8-pin)		
X20/1	Plug connection, center high-mounted stop lamp		

Function (USA)

The center high-mounted stop lamp is operated in parallel to the stop lamps and contact is created via the plug connection (X18 or X20/1) at the exterior lamp failure monitoring unit.

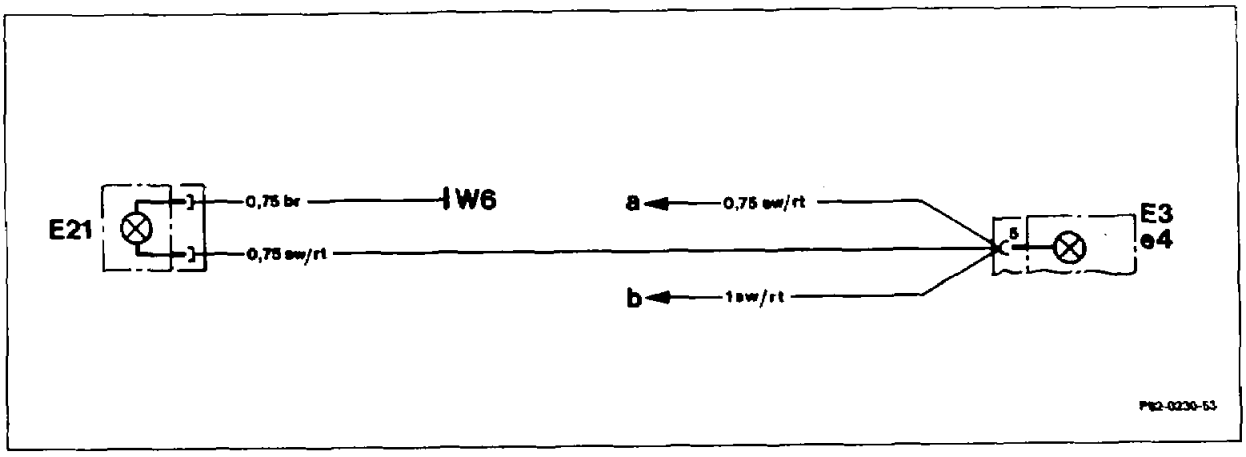

Wiring diagram of center high-mounted stop lamp (AUS)

E3	Left taillamp	W6	Ground, left wheelhouse in trunk
E3e4	Stop lamp	a	To right taillamp, stop lamp
E21	Center high-mounted stop lamp	b	To stop lamp switch

Function (AUS), New Zealand

The center high-mounted stop lamp makes contact at the stop lamp switch (S9) and is monitored by the exterior lamp failure monitoring unit (N7).

The center high-mounted stop lamp is positioned at the rear screen.

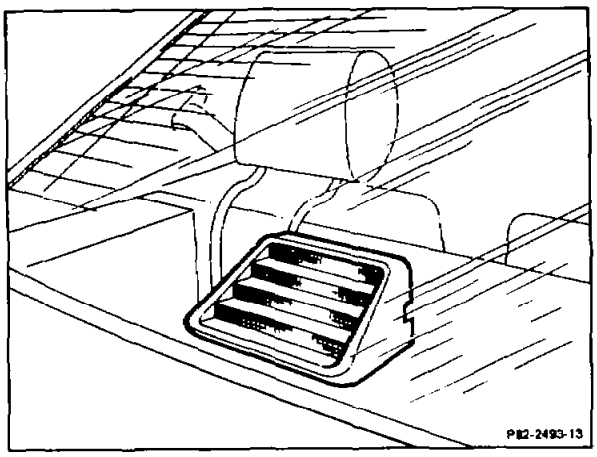

Sedan

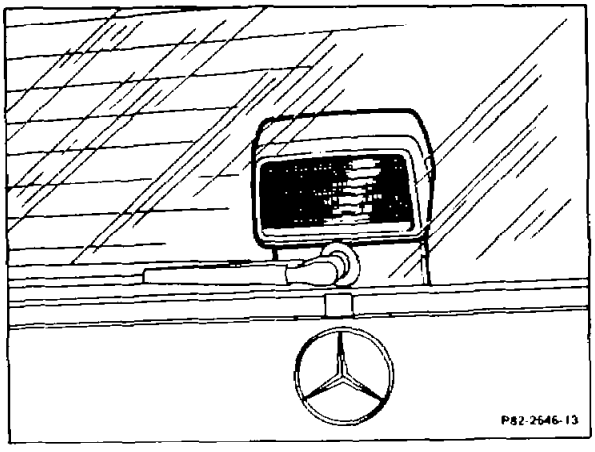

Station Wagon

82–5891 Light warning buzzer (except USA)

Operation no. of operation texts and work units or standard texts and flat rates:

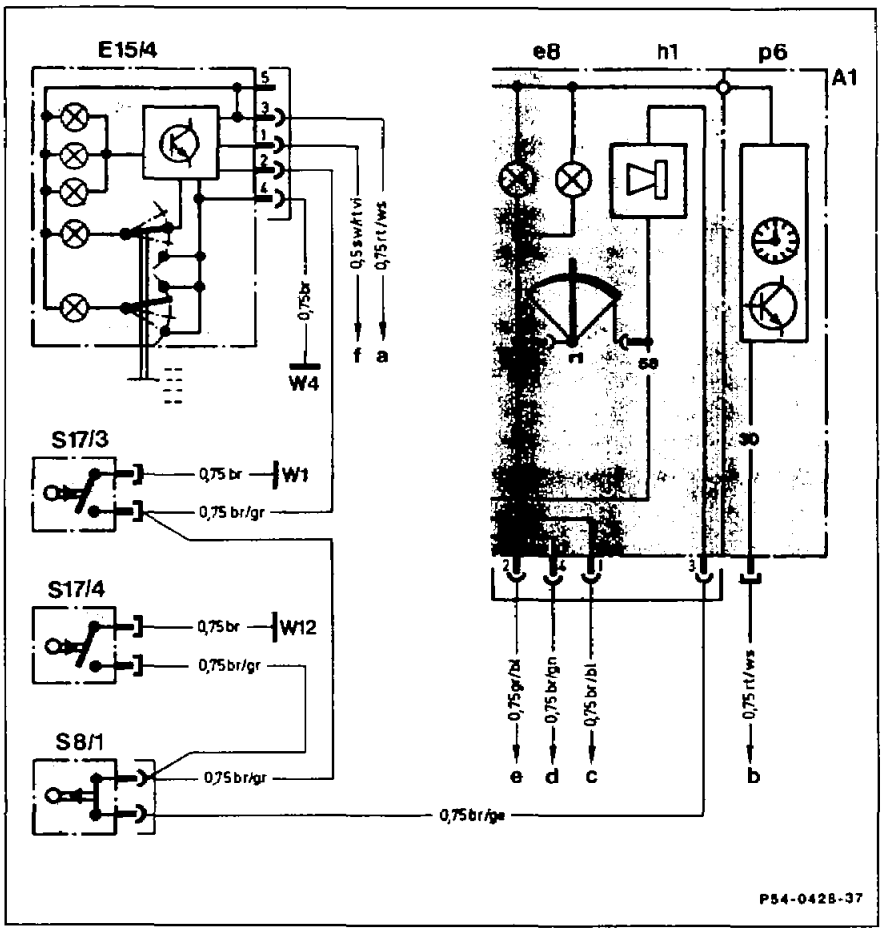

Wiring diagram of light warning buzzer

A1	Instrument cluster
A1e8	Instrument lighting
A1h1	Warning buzzer
A1p6	Electronic clock
E15/4	Dome lamp with reading lamp and seat belt reminder
S8/1	Warning buzzer contact, lighting
S17/3	Front left door contact switch
S17/4	Front right door contact switch
W1	Main ground (behind instrument cluster)
W4	Ground, front dome lamp
W12	Ground, center console
a	To fuse 9 terminal 30
b	To fuse 9 terminal 30
c	To switch, windscreen washer level indicator lamp S42
d	To plug connection, starter harness X27
e	To terminal block X6, terminal 58d (2-pin)
f	To fuse 5 terminal 15

If a light source (high beam, low beam or parking light) is not switched off, a warning buzzer sounds to indicate this after the ignition key is withdrawn or when the right or left front door is opened.

The warning buzzer is controlled via the door contact switches of the interior lighting. The warning buzzer stops again when the front door is closed.

82–0395 Wiring diagram heated rear screen

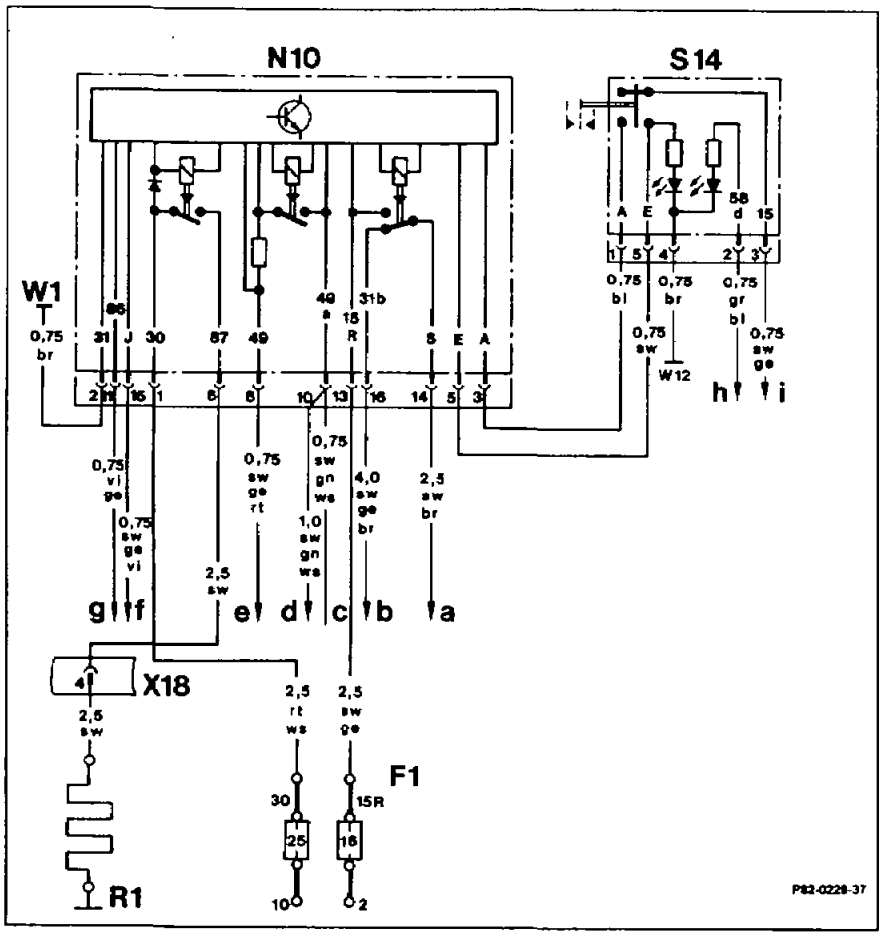

F1	Fuse and relay box
N10	Combination relay (turn signals heated rear screen, wiper motor)
R1	Heated rear screen
S14	Heated rear screen switch
W1	Main ground (behind instrument cluster)
X18	Plug connection, interior/tail lamp harness (8-pin)

a	To plug connection, combination switch (S4x1), contact 9
b	To wiper motor (M6/1), contact 1
c	To exterior lamp failure monitoring unit (N7), terminal 49a
d	To plug connection, combination switch (S4x1), contact 7
e	To hazard warning switch (S6), terminal 49
f	To plug connection, combination switch (S4x1), contact 14
g	To plug connection, combination switch (S4x1), contact 10
h	To terminal block, terminal 58d (2-pin) (X6)
i	To fuse and relay box (F1), fuse 1

82-0540 Function of headlamp wash/wipe system

Operation no. of operation texts and work units or standard texts and flat rates:

A. General

For wiring diagrams see Wiring Diagrams Passenger Cars Volume 3.1.

The headlamp wash/wipe system is started by switching on the vehicle lights and by operating the combination switch, which at the same time operates the windscreen washer system.

The wiper motors run for as long as the combination switch is operated and, when the switch is released, automatically returned to the parked position. In contrast, the pump operates only intermittently and is controlled by a contact in the wiper motor. As a result, cleaning fluid is sprayed onto the headlamp lenses only briefly during each wiper movement.

Starting 03/89 a modified headlamp wash/wipe system relay has been fitted (Part no. 126 820 20 26). This prevents the wiper arm rising if the combination switch is only touched briefly. This avoids the wiper arm stopping beyond the parked position. This relay can also be fitted to models built prior to 03/89.

For (USA) version the wipe angle has been modified with effect from 06/88 from 90° to 85° (Make Bosch) to avoid the wiper arm jumping.

B. Location and adjustment of nozzles

There are 2 nozzles fitted in the wiper arm. Nozzle 1 has a fixed setting while nozzle 2 can be adjusted with a needle.

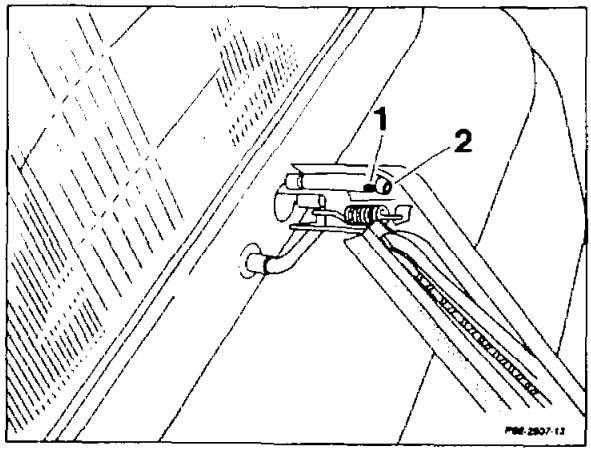

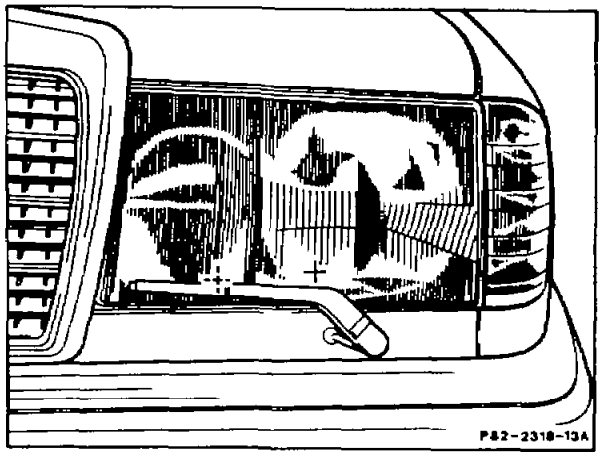

Adjustment points of nozzles

82–0610 Removing and installing rubber of wiper blade

Operation no. of operation texts and work units or standard texts and flat rates:
82–0608

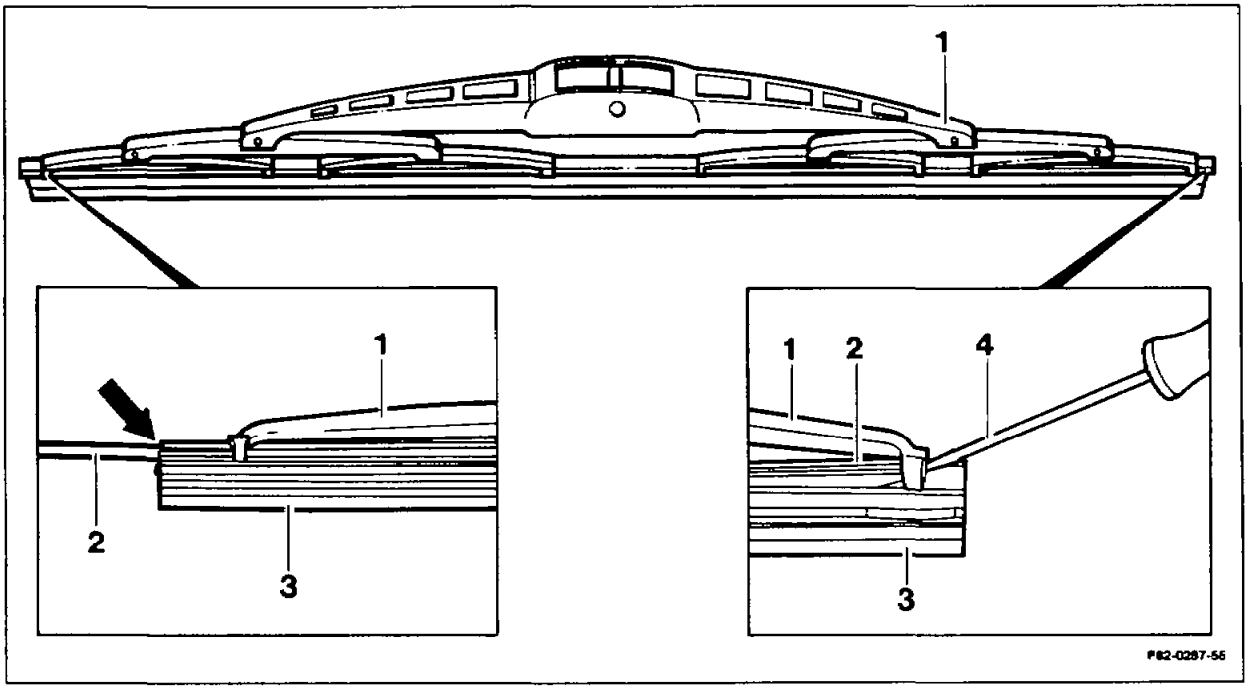

Removal

Wiper blade (1)	remove.
Retaining springs (2)	push back out of the closed rubber side and withdraw completely from the rubber (3).
Wiper blade rubber (3)	detach at the retaining carriers (4) of the wiper blade (1).

Installation

Wiper blade rubber (3)	insert at the retaining carriers (4) of the wiper blade (1).
Retaining springs (2)	push into the rubber (3) from the open end of the channel (arrow). The curved side must be facing toward the windscreen.
Wiper blade (1) with retaining springs (2)	place on solid base and press in.

Note

The retaining springs engage more easily if the front end is chamfered and coated with soapy water.

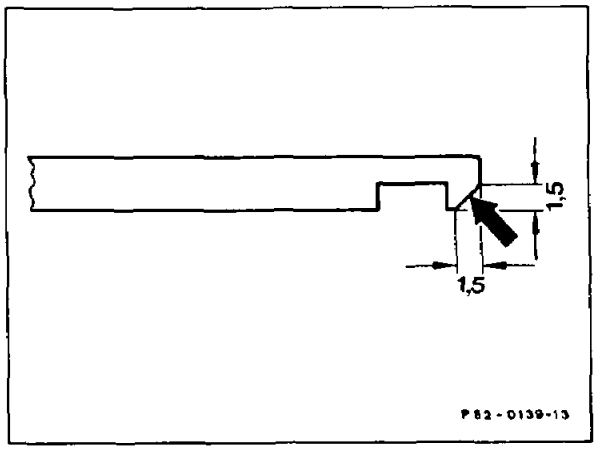

82–0680 Removing and Installing wiper motor

Preceding work:
Grille on air inlet removed (83–040).

Operation no. of operation texts and work units or standard texts and flat rates:
82–1400

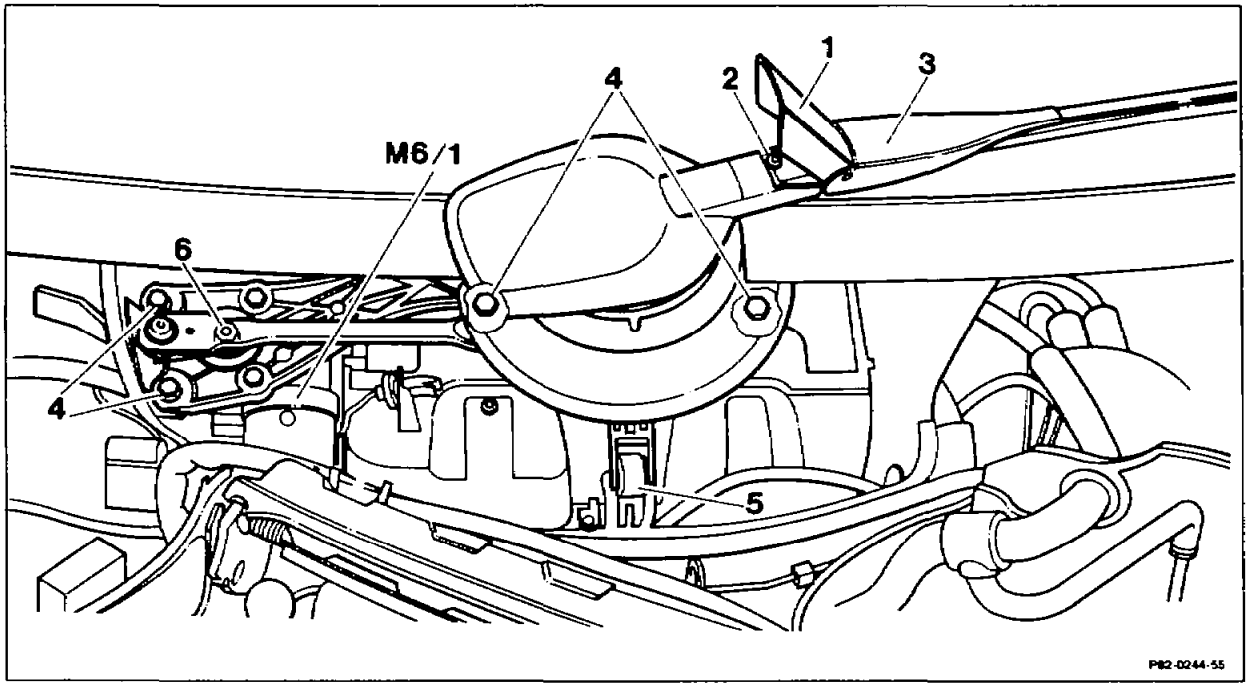

⚠
Withdraw ignition key!
Movements at the wiper arm or wiper linkage may activate the automatic park position control if the ignition key is in position "1". Unintentional operation of the wipers might result in hand injuries.

Cover (1) at wiper arm (3)	open, close.
Hexagon socket screw (2)	unscrew, screw in.
Wiper arm (3)	take off, adjust and fit on (steps 19 and 20).
4 hexagon nuts (4)	unscrew, screw on.
Retaining clip (5)	take off, fit on.
Electrical connection	unplug, plug in.
Wiper system	take out, insert.
Hexagon nut of wiper motor shaft (6)	unscrew, screw on, 19 Nm.

Crank arm with linkage	press off, fit on.
	Note Crank arm and push rod must be parallel to each other.
Wiper motor (M6/1)	unscrew, screw on, 5 Nm.

Shop-made tool

Test gauge
Material: wood or plastic

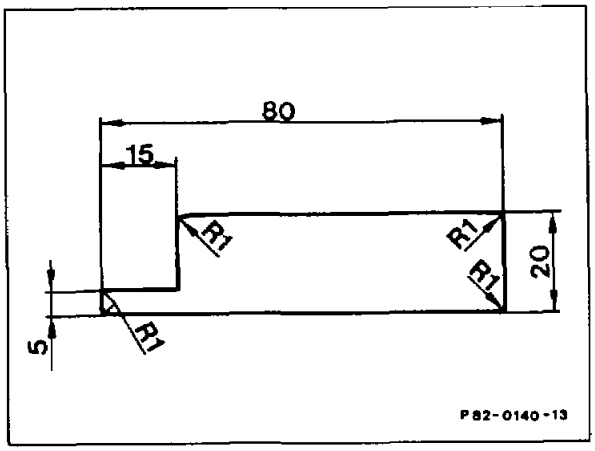

Removal

⚠
Withdraw ignition key!
Movements at the wiper arm or wiper linkage may activate the automatic park position control if the ignition key is in position "1". Unintentional operation of the wipers might result in hand injuries.

1st version

1 Open cover plate cover, unscrew hexagon socket screw and remove. Take off wiper arm.

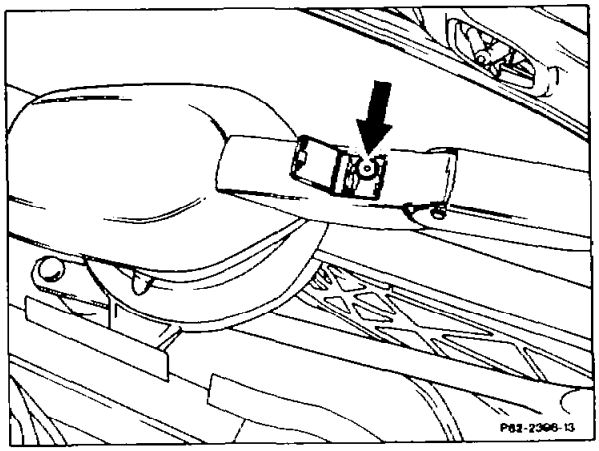

2nd version

2 Move wiper system to maximum extended stroke.

3 Pull off plastic cover (arrow) downward.

4 Unscrew hexagon socket screw below plastic cover and pull off wiper arm.

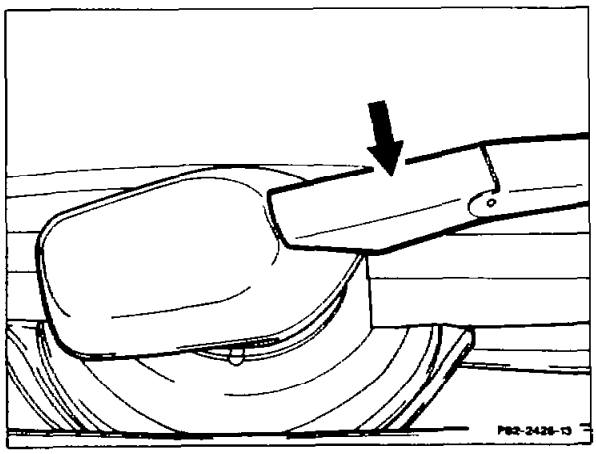

5 Remove hexagon nuts (arrows) and pull off retaining clip (5).

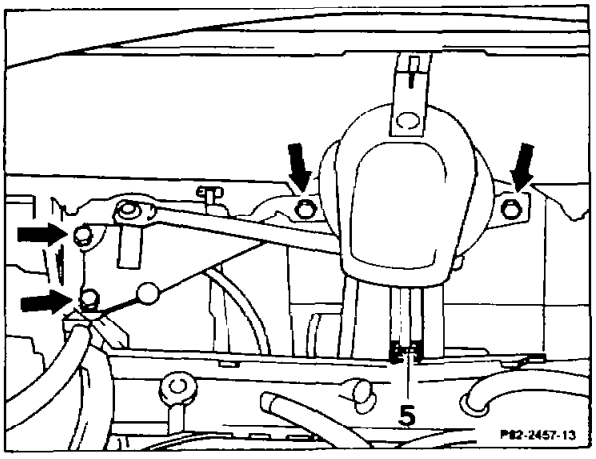

6 Take out wiper system.

7 Pull off plug connection (arrow).

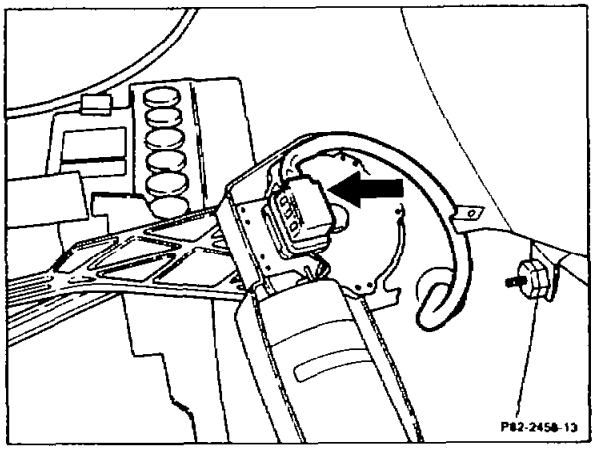

8 Unscrew hexagon nut (arrow) from wiper motor shaft and press off crank arm.

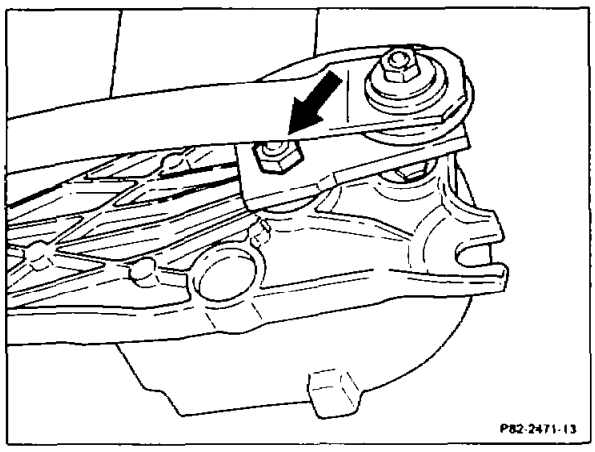

9 Unscrew hexagon bolts (arrows) of wiper motor and take off wiper motor.

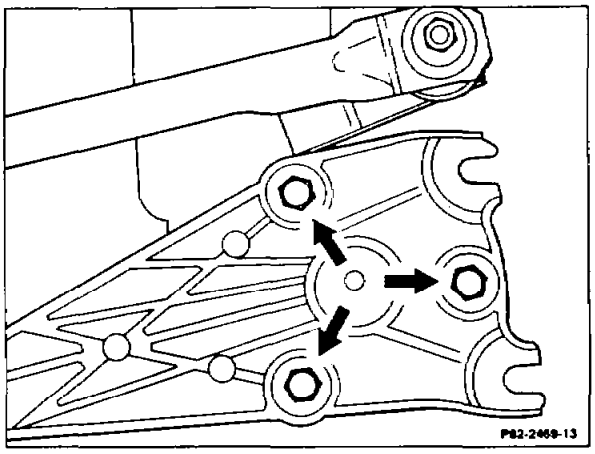

Installation

10 Screw on hexagon bolts of wiper motor, 5 Nm.

11 Connect wiper motor to wiring harness and run to park position.

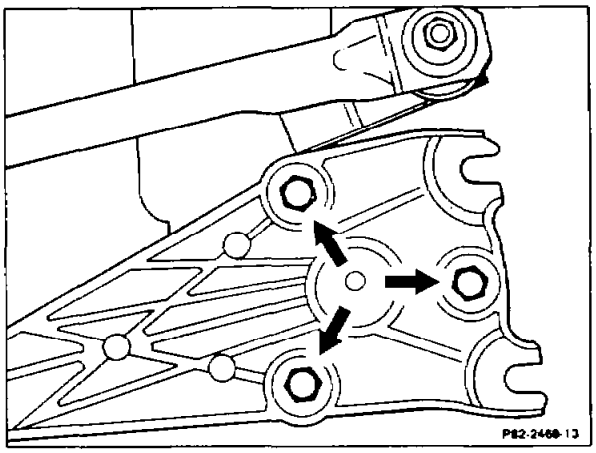

12 Fit crank arm onto wiper motor shaft and align.

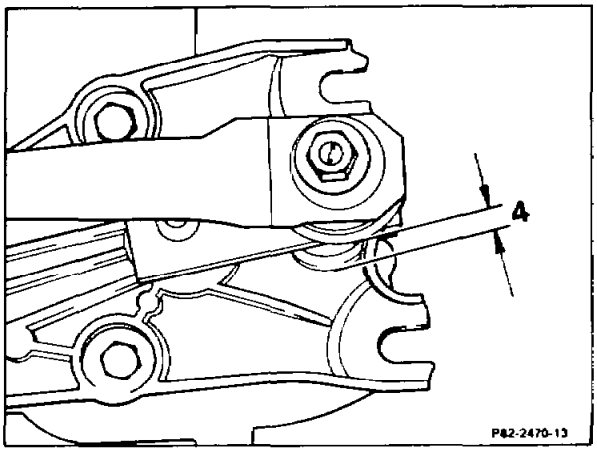

13 Tighten hexagon nut (arrow) to 19 Nm.

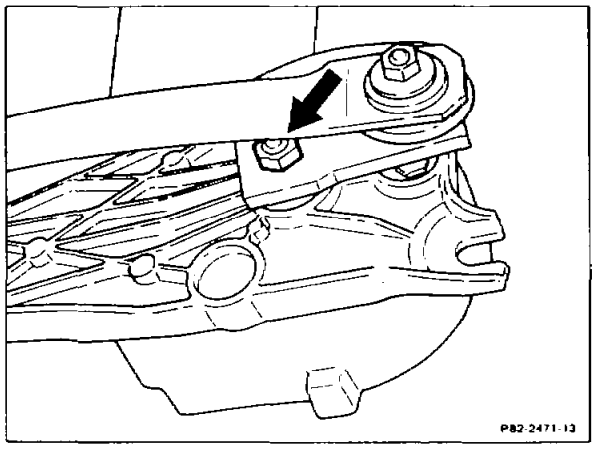

14 Insert wiper system.

15 Screw on hexagon nuts (arrows).

16 Fit on retaining clip (5).

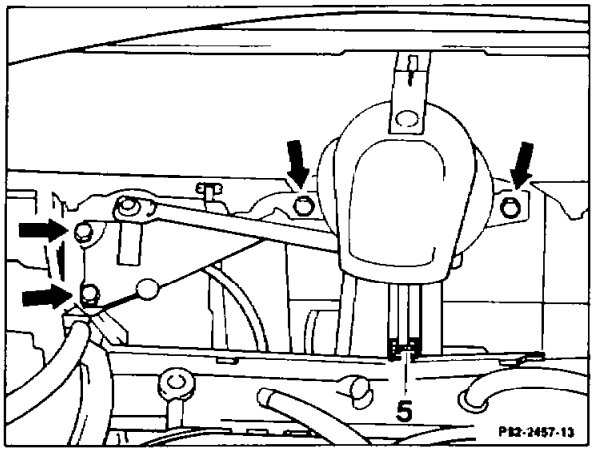

17 Press wiper system up far enough for the test gauge to be inserted (reference size A). If the adjustment facility in the oblong holes is not sufficient, install washers between rubber mounts and wiper system.

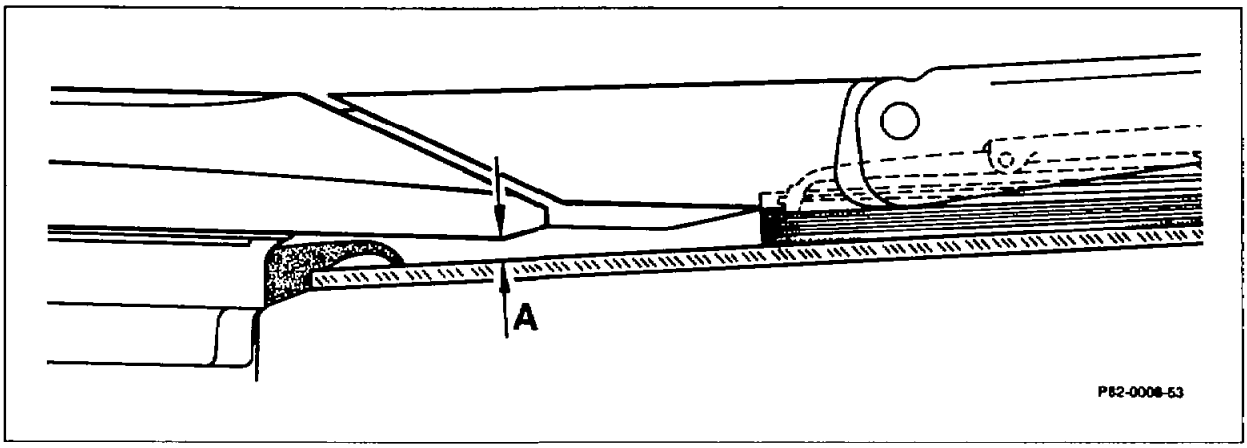

18 Install wiper arm.

19 Move wiper arm into centre position.

20 Measure reference size "B" with gauge. If the distance is less than 5 mm, bend wiper arm toward windscreen until gauge can be inserted.

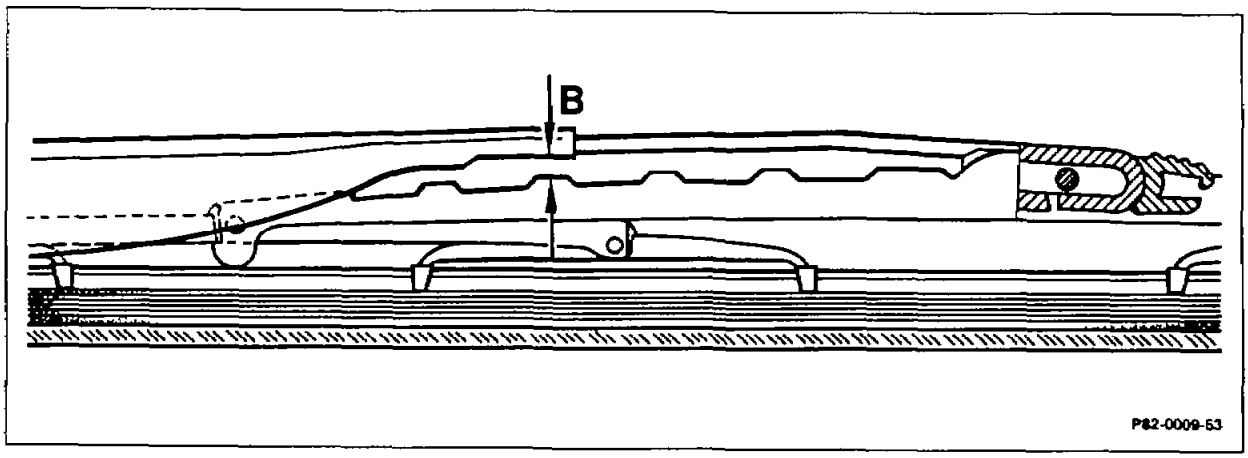

82–0760 Removing and installing wiper linkage

Preceding work:
Wiper system removed (82–0680).

Operation no. of operation texts and work units or standard texts and flat rates:
82–0760

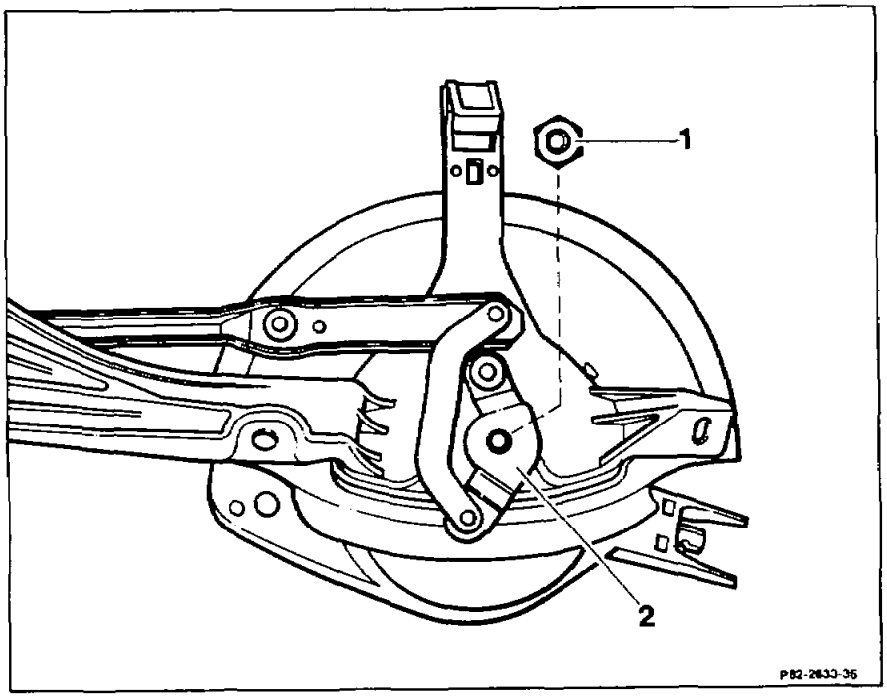

Nut (1) on wiper motor shaft	unscrew, screw on, 19 Nm.
Crank arm (2)	press off, fit on.

Align markings on gear head for installing (arrows) so that they are above each other (park position).

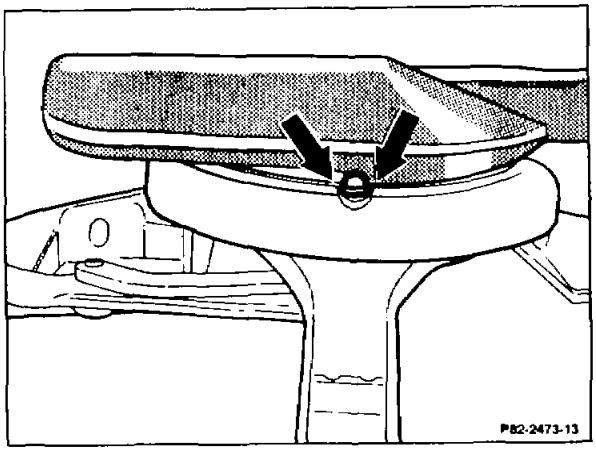

82–0765 Removing and installing rubber seal below wiper gear

Preceding work:
Wiper system removed (82–0680).
Wiper linkage detached from wiper gear (82–0760).

Operation no. of operation texts and work units or standard texts and flat rates:

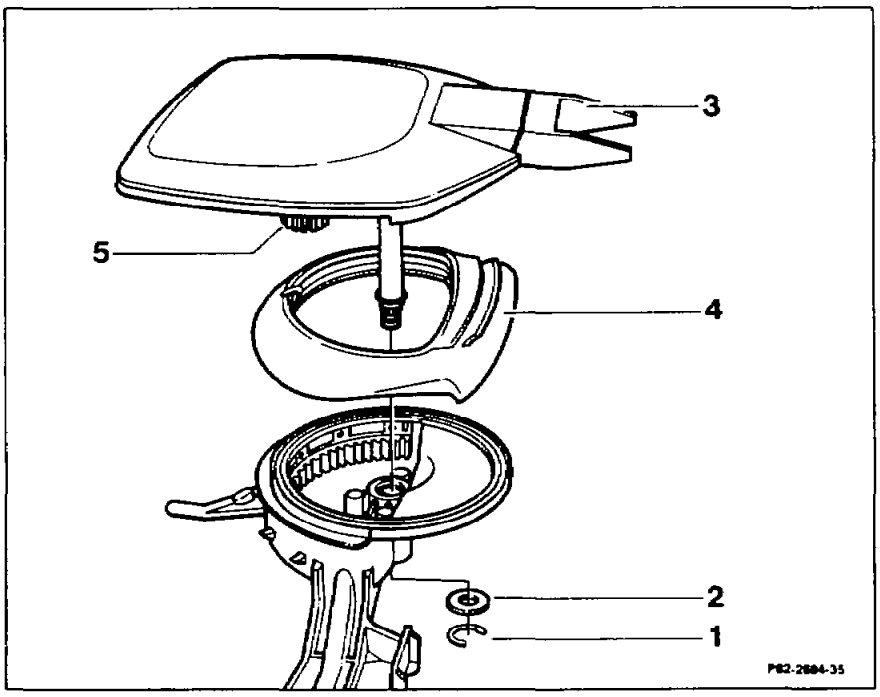

Locking ring (1) and washer (2)	take off, fit on.
	⚠ Gear head can only be removed in centre position. Do not knock out with hammer. When installing, the push rod must be fully inserted; correct, if necessary, by turning cog wheel (5).
Gear head (3)	turn into centre position, remove from bearing, insert.
Rubber seal (4)	remove, exchange. Coat rubber seal with MB Universal Adhesive.

Removal

1 Press off locking ring (arrow).

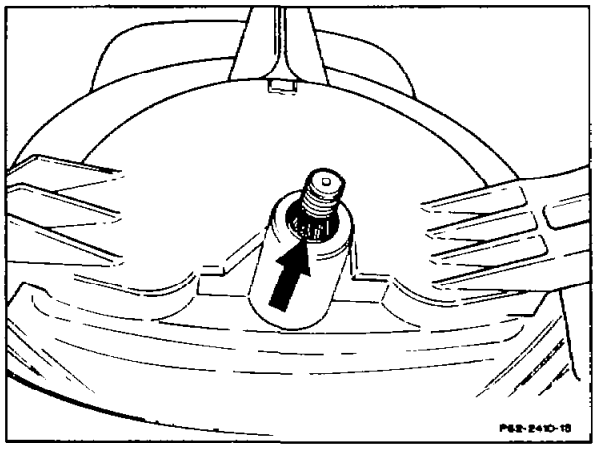

⚠
Gear head can only be withdrawn in centre position. Do not use force.

2 Turn gear head into centre position (at right angles to notched bar) and withdraw the bearing.

3 Take off rubber seal (arrows).

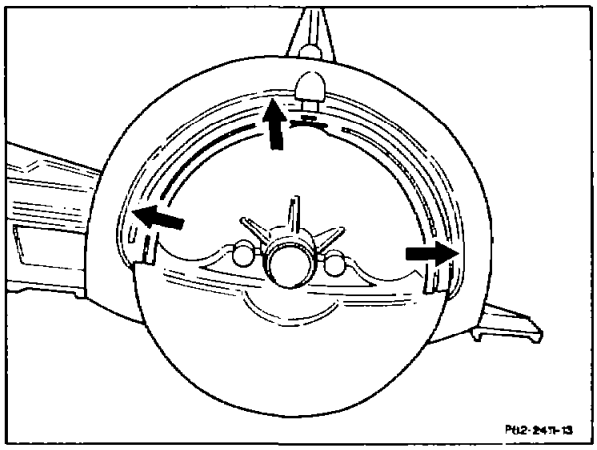

Installation

4 Coat new rubber seal (arrows) with MB Universal Adhesive and stick onto the housing.

Models with air conditioner

5 Additionally attach new rubber seal with a hose strap (arrow).

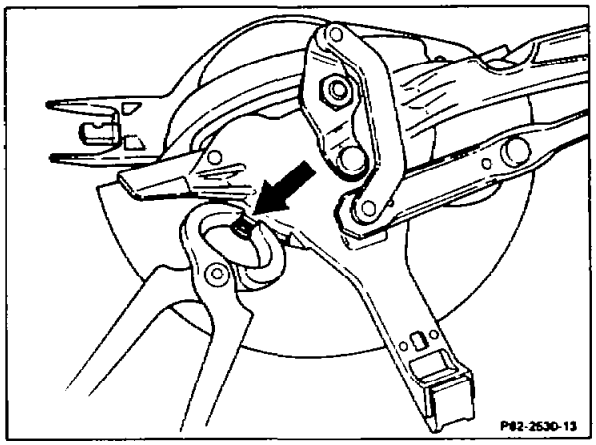

6 Move gear head into centre position and introduce into bearing until the push rod is fully inserted. Correct at gear wheel if necessary by turning.

7 Press retaining ring onto wiper shaft.

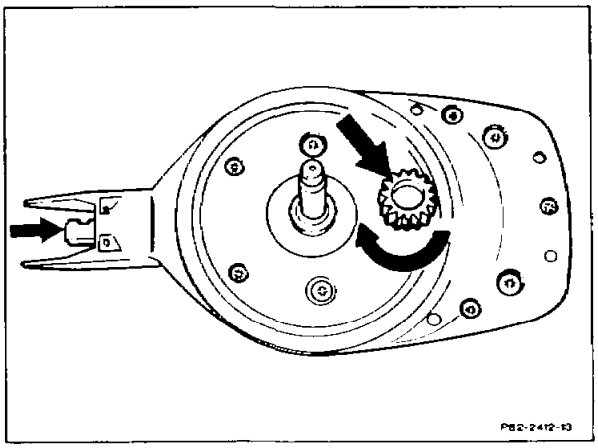

82–0770 Removing and installing tail gate wiper motor

Preceding work:
Door trim on tail gate removed (72–105).

Operation no. of operation texts and work units or standard texts and flat rates:
82–1450

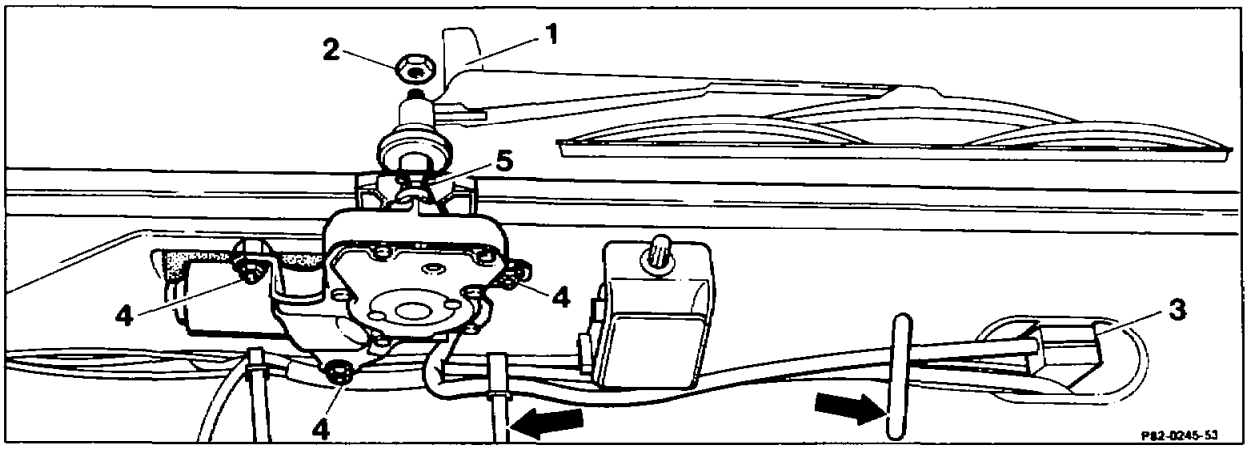

Cover (1)	open, close.
Hexagon nut (2)	unscrew, screw on.
Wiper arm	take off, fit on.
Cable straps (arrows)	open.
Electrical connection (3)	unplug, plug in.

Note
As of 02/86 a clip prevents the coupling being detached from the wiper motor connector when the tail gate is closed.

3 hexagon nuts (4)	unscrew, screw on.
Retaining ring (5)	open, take out wiper motor (M6/4), insert.

Note
Insert wiper motor (M6/4) so that the cover on the outside (7) meshes into the grooves on the wiper motor (M6/4). Have a second person hold the outside cover (7) and press in the wiper motor (M6/4) deep enough for the retaining ring (5) to engage in the groove on the wiper motor (M6/4).

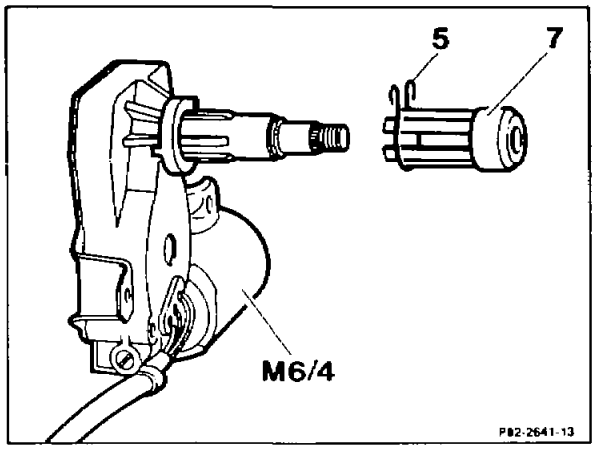

Retaining ring (5)	. . . . .	remove from groove, insert.
Outer cover (7) and inner cover (6)	. . . . .	take off, insert.

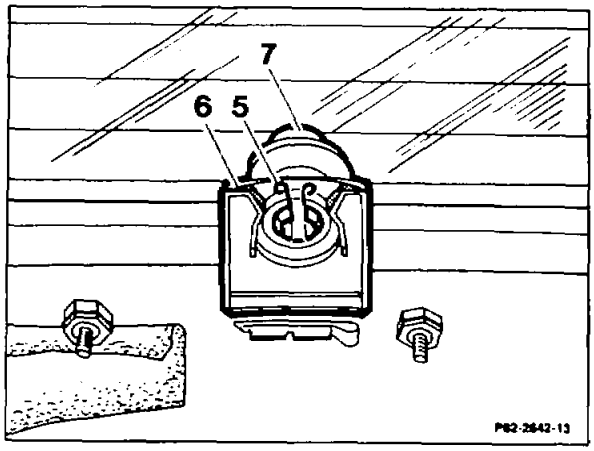

82–0790 Function of heated windscreen washer nozzle

Operation no. of operation texts and work units or standard texts and flat rates:

Nozzle

1st version (up to 08/87)

A PTC heating resistor is installed in the nozzle. This PTC heating resistor increases its resistance as the nozzle heats up.

With the key in position 2, a current of approx. 300 mA flows through the PTC heating resistor, which reduces to a steady-state current of 100 mA as the nozzle heats up.

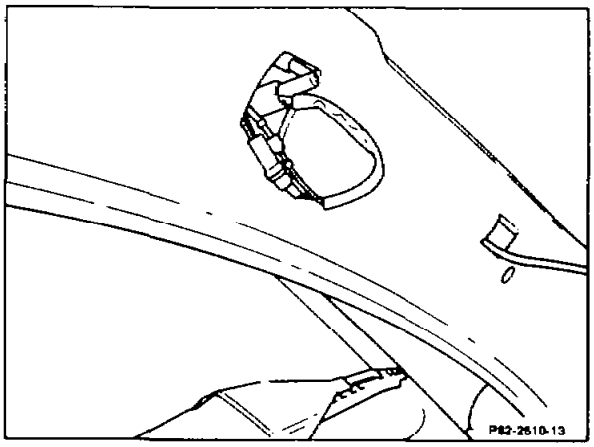

2nd version (as of 09/87)

A fixed resistor of 32.9 Ω is installed in the nozzle. A heating current of 390 mA flows at -20°C.

Setting of nozzles

The nozzles are set in accordance with the drawing opposite.

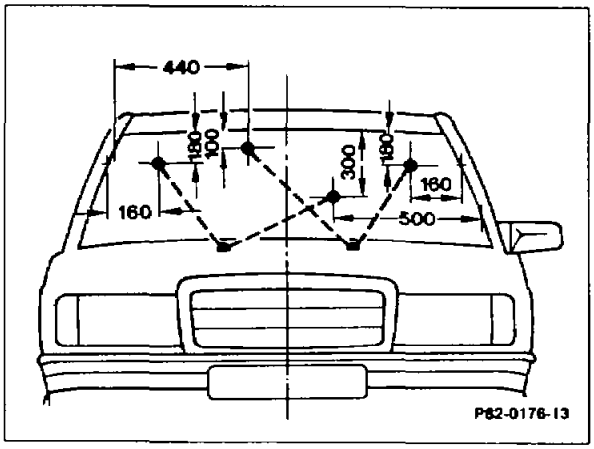

Check valve

The check valve is located below the cover in the hood. Unclip cover (arrows).

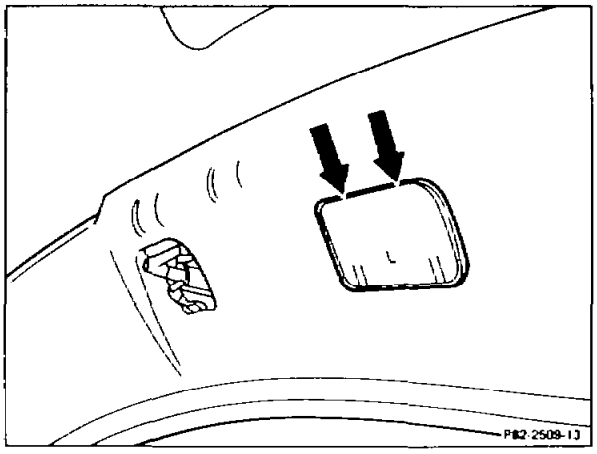

The check valve is protected with foam to prevent noises (foam pushed back).

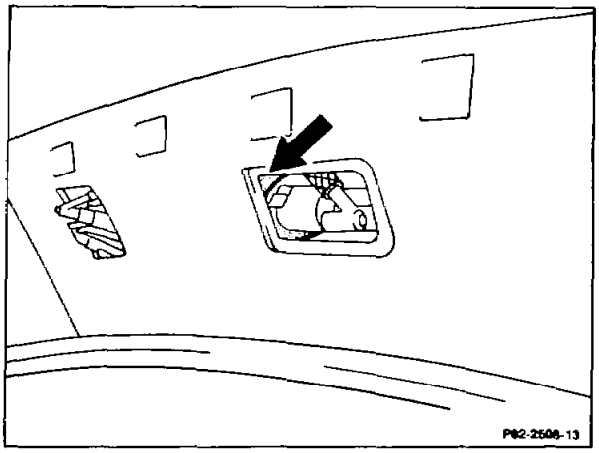

82–0795 Function of heated windscreen washer system

Operation no. of operation texts and work units or standard texts and flat rates:

For wiring diagrams, see Wiring Diagrams Passenger Cars Volume 3 or 4 (vehicle wiring diagram).

The heated windscreen washer system is standard with effect from 09/88 for all LHD models. The RHD versions and models for tropical countries are supplied without heated windscreen washer system.

The windscreen washing fluid in the reservoir is heated by a heat exchange from the coolant circuit.

The hose system from the reservoir to the windscreen washer nozzle and the nozzles themselves are heated electrically to prevent the entire system freezing up when driving. The optional head lamp wash/wipe system also draws washing fluid from the same reservoir as the windscreen washing system and is thus also preheated. Hoses and nozzles are not heated.

The heat exchanger (tubular spiral) in the washing fluid reservoir of the windscreen washer system is supplied with warm coolant from the bypass flow to the heating circuit. A thermovalve in the heat exchanger maintains a uniform temperature of the windscreen washer fluid of +20°C to +30°C. Resistance wires are installed in the hoses from the reservoir to the windscreen washer nozzles, and also at the check valve.

The nozzles which were previously already electrically heated are provided with a stronger heating capacity.

A thermoswitch switches on the entire electrically heated part of the windscreen washer system when the outside temperature drops to +5°C and switches off the system again when the outside temperature rises to +15°C.

The current consumption of the entire windscreen washer system is approx. 4.7 A at 13 volts.

The windscreen washer system should always be filled with MB windscreen washer fluid – in summer with concentrate S, in winter with concentrate W – and water in the specified mixing ratio.

82–0800 Function of seat heaters

Operation no. of operation texts and work units or standard texts and flat rates:

For wiring diagrams see Wiring Diagrams Passenger Cars Volume 3.1 or 4.

Function

The seat heater is operated by a non-locking switch which moves back into its normal position again after the heater is switched on.

Heater stage 1 or 2 is switched on by pressing once on the appropriate symbol. One indicator lamp lights up if stage 1 is selected and both indicator lamps for stage 2.

Pressing a second time on the same symbol switches off the heater again.

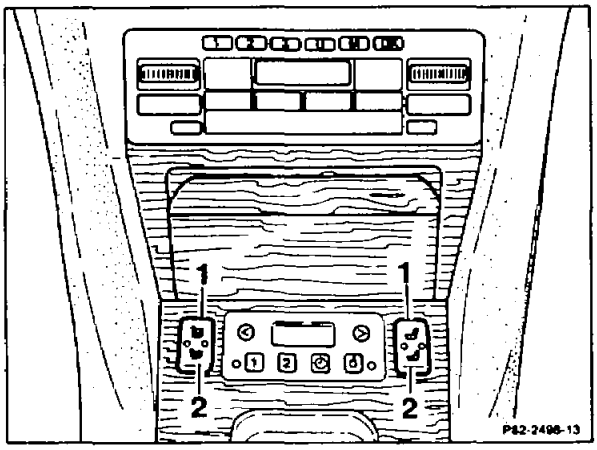

1st version up to 04/87
The front left or right seat heater control unit (N25/1 and N25/2) is located below the foot mat in the left or right cable duct.

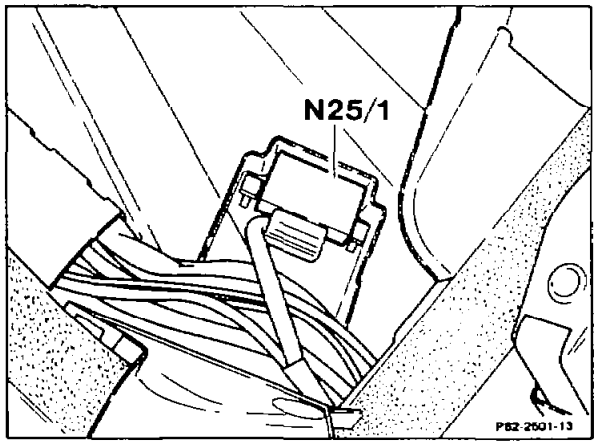

2nd version as of 05/87

The front seat heater control unit (N25/5) is located on the left below the rear bench seat.

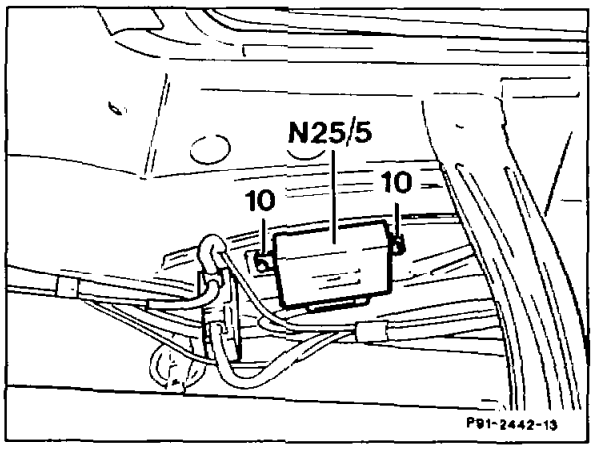

3rd version as of 09/89

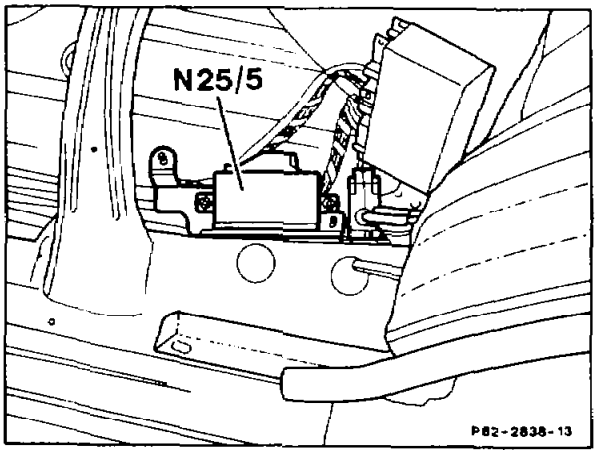

N25/5 *Front seat heater control unit*

Terminal 30 feed through auxiliary fuse box (F22/1) in left of engine compartment.

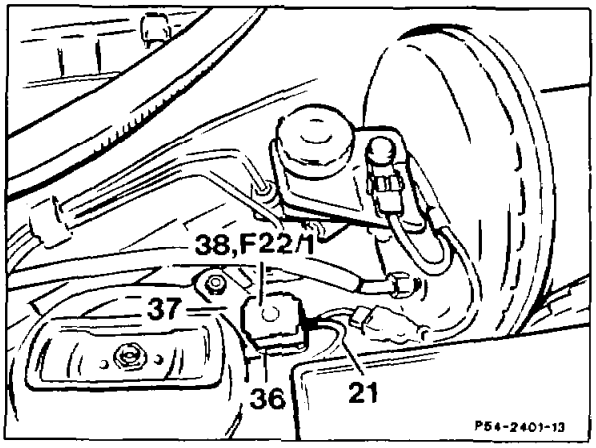

The period of operation of both heating stages is limited by the seat heater control unit.

The heater switches over from stage 2 (high heating capacity 60 W) automatically to stage 1 (low heating capacity 15 W) after about 5 minutes, and the seat heater switches off automatically after about 30 minutes.

Note
As of 09/89 the heating capacity with soft leather seating is intensified.
Heating stage 1 30 W
Heating stage 2 120 W

The automatic heating cycle is interrupted if the ignition starter switch (glow start switch) is switched off.

If the ignition starter switch (glow start switch) is switched on again. The seat heater switch must be re-operated (as for heated rear screen).

If the battery voltage drops below 11 V, the seat heater is switched off automatically by the control unit N25/5, and the indicator lamps in the switch flash.

82–0834 Outside rear-view mirror with electrically heated mirror glass

Operation no. of operation texts and work units or standard texts and flat rates:

For wiring diagram see Wiring Diagrams Passenger Cars Volume 3 or 4 (vehicle wiring diagram).

General

The outside rear-view mirror with electrically heated mirror glass is included in the standard scope with effect from 09/85. he heater is located on the rear of the mirror glass and is firmly attached to the latter. Also on the rear of the mirror glass is a thermostat which switches the heater on and off in line with the temperature. The mirror glass can be replaced separately (88–900).

Function

The heater is in the standby position in key position 2 (terminal 15).

The heater is switched on by thermostat at ambient temperatures below 5 ± 3°C . The heater continues operating up to an ambient temperature of 15 ± 3°C and switches off after this temperature is reached.

If the temperature again drops below 5 ± 3°C, the heater switches on again and remains on up to 15 ± 3°C. This operating cycle is repeated until the ambient temperature at the mirror is always above 5 ± 3°C or the key is turned into position 1 or 2.

Current consumption

Starting current	≤ 4	amperes
Continuous current	≥ 1.5	amperes

Note

As of 12/87 modified cut-in and cutout times of mirror heater

≤ 15°C On

≥ 25°C Off

82–0865 Removing and installing power seat adjustment switch

Operation no. of operation texts and work units or standard texts and flat rates:

Removal

1 Disconnect ground cable at battery.

2 Pull off molded controls (1, 2, 3).

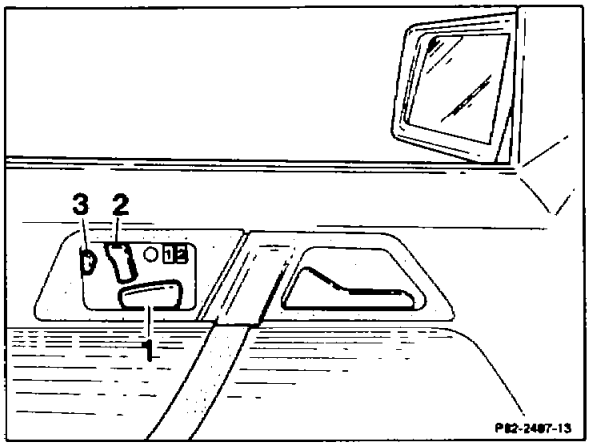

3 Unclip cover (4) (arrows) and take off.

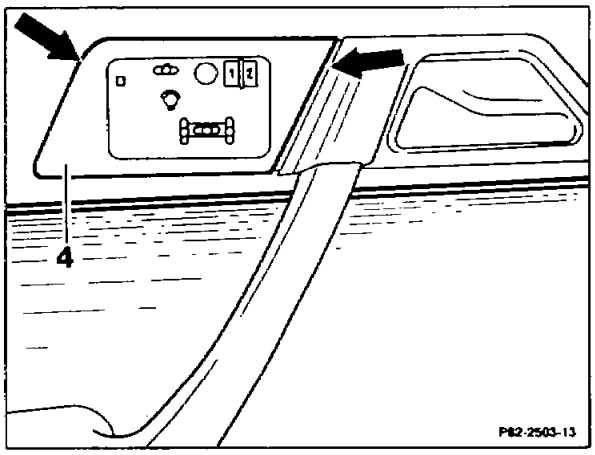

4 Unscrew switch (arrows) and detach plug connectors of wiring harness from switch.

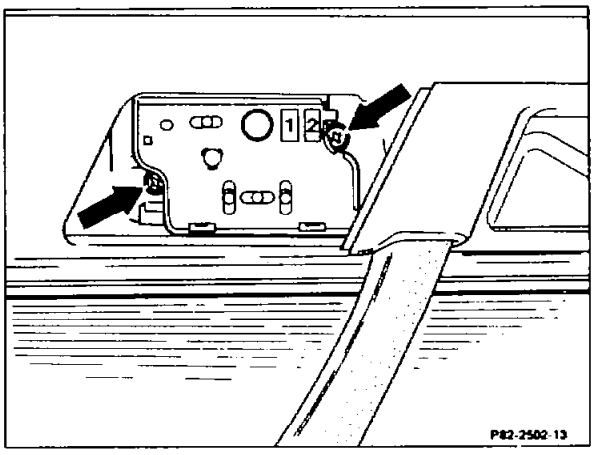

Installation

The parts are installed in the reverse order. Connect battery and check operation of power seat.

Operation no. of operation texts and work units or standard texts and flat rates:

A. Version without memory control up to 05/90

For wiring diagrams see Wiring Diagrams Passenger Cars Volume 3.1 and 4.

Func tion

The seats can be adjusted by a switch combination which is installed in the door trim.

The wiring harness is connected to the switch by three plug connectors.

The switch can be removed without having to remove the door trim.

Switch for adjusting seat and head restraint

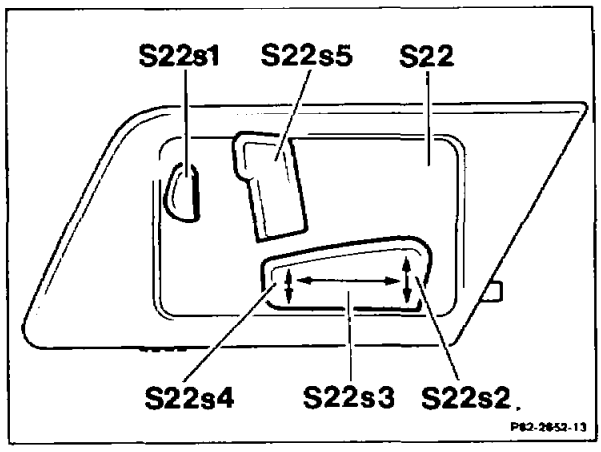

S22 Front left seat adjustment switch
S22s1 Head restraint high/low
S22s2 Seat height front
S22s3 Seat forward/back
S22s4 Seat height rear
S22s5 Backrest

A group of three motors is fitted to the frame of the seat for forward/back and height adjustment.

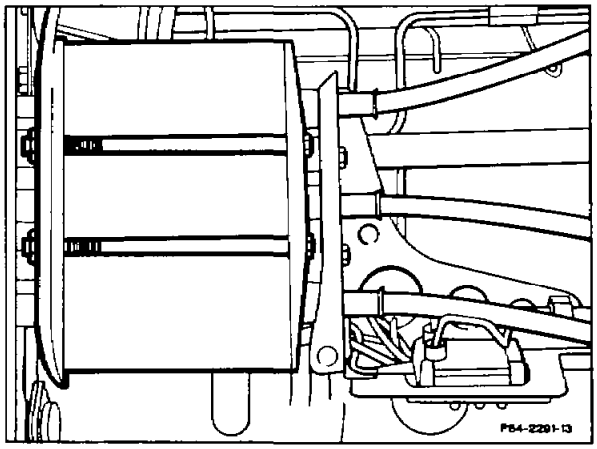

The motors operate 3 shafts which in turn drive a gear (1) which performs the adjustment.

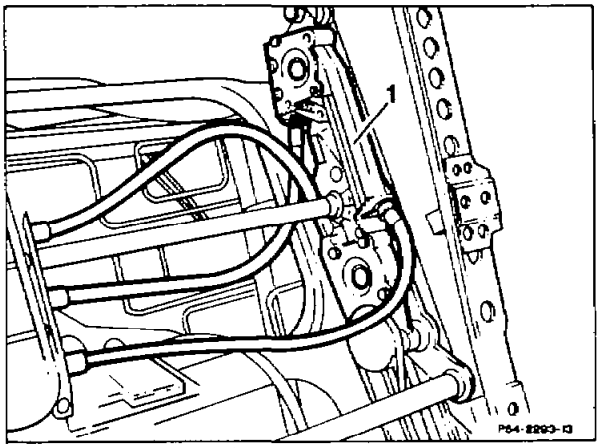

A further motor (M7m5) is fitted to the frame of the backrest for adjusting the backrest. This drives a gear directly to adjust the backrest forward and back.

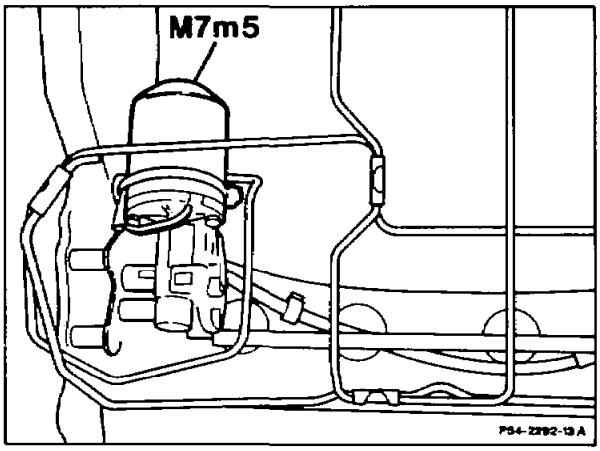

M7m5 Backrest

Head restraint adjustment motor

The motor (M7m1) for adjusting the head restraint is installed in the frame of the backrest.

The head restraint is adjusted by a rack (20) which is driven by a motor through a shaft (21).

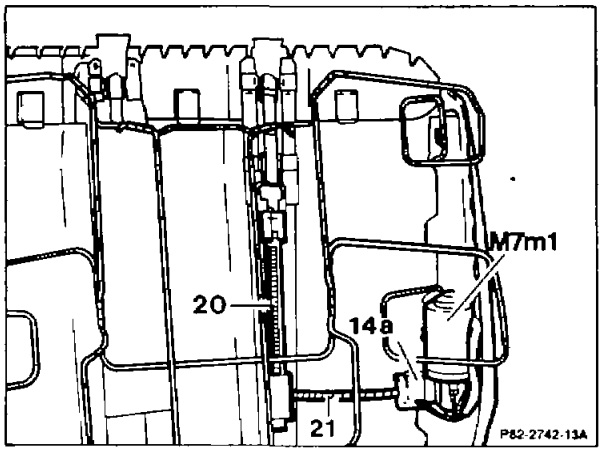

M7m1 Head restraint high/low
14a Potentiometer for version with memory control

B. Version without memory control for adjusting seat, backrest and head restraint as of 06/90

For wiring diagrams see Wiring Diagrams Passenger Cars Volume 4.

Function

The seats can be adjusted by a switch combination which is installed in the door trim.

Note
The wiring harness is connected to the switch by four plug connectors.

The switch can be removed without removing the door trim.

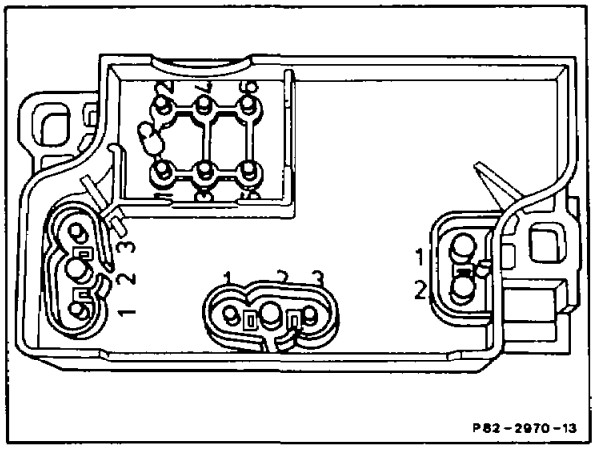

Seat and head restraint adjustment switch

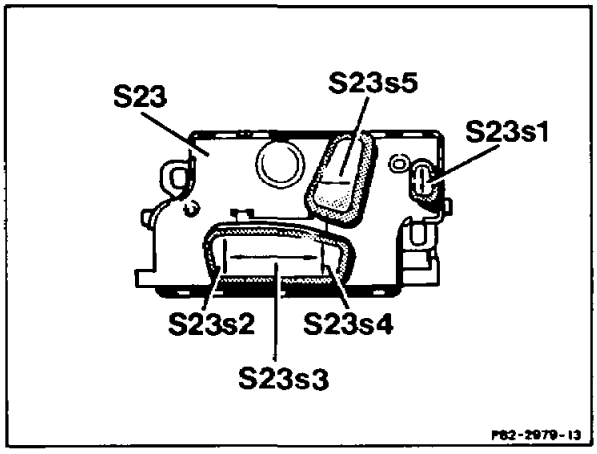

S23 Front right seat adjustment switch
S23s1 Head restraint high/low
S23s2 Seat height front
S23s3 Seat forward/back
S23s4 Seat height rear
S23s5 Backrest

A group of three motors is fitted in the frame of the seat for forward/back and height adjustment.

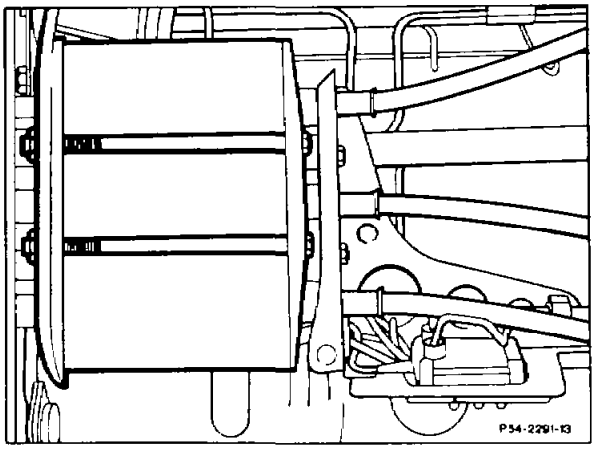

The motors operate at 3 shafts which in turn drive a gear (1) which performs the adjustment.

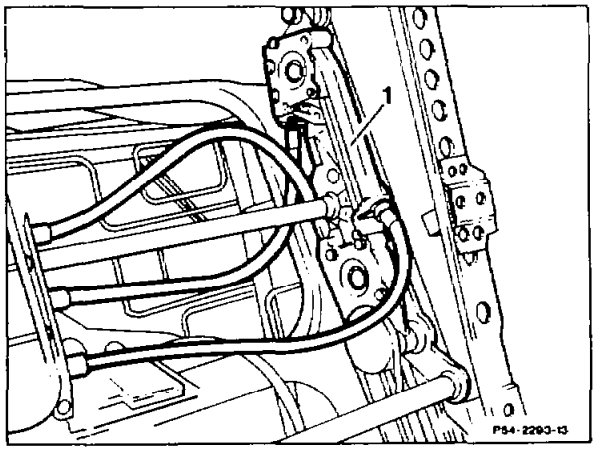

A further motor (M7m5) is installed in the frame of the backrest for directly moving the backrest forward and back through a gear.

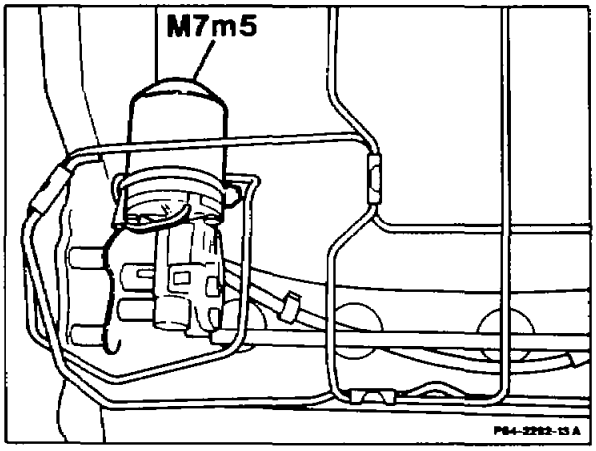

M7m5 Backrest

Head restraint adjustment motor

The motor (M7m1) for adjusting the head restraint is installed in the frame of the backrest.

The head restraint is adjusted by a rack (20) which is driven by the motor through a shaft (21).

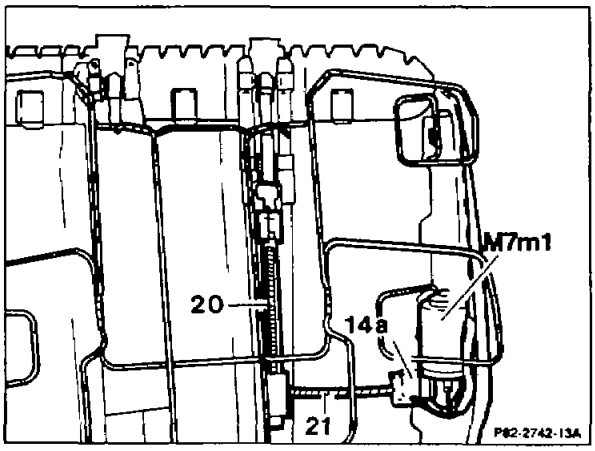

M7m1 Head restraint high/low
14a Potentiometer

C. Version with memory control and steering column adjustment 06/90

For wiring diagrams see Wiring Diagrams
Passenger Cars Volume 3.1and 4.

Operation

The steering column is adjusted by the steering column adjustment switch (S59) on the column casing tube.

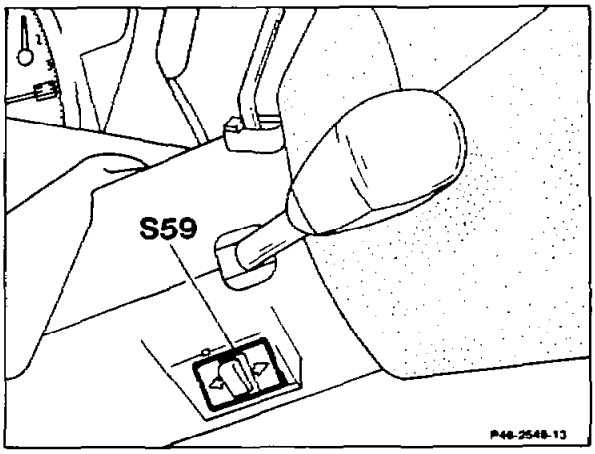

The seats and head restraints are adjusted by the switches S22 and S23 in the door linings.

The adjustment can be made when the key is in position 1 and 2 or when it is withdrawn, and the driver's door is open.

Two steering column, seat and the relevant head restraint positions can be stored and retrieved as required.

Seat and head restraint adjustment switch

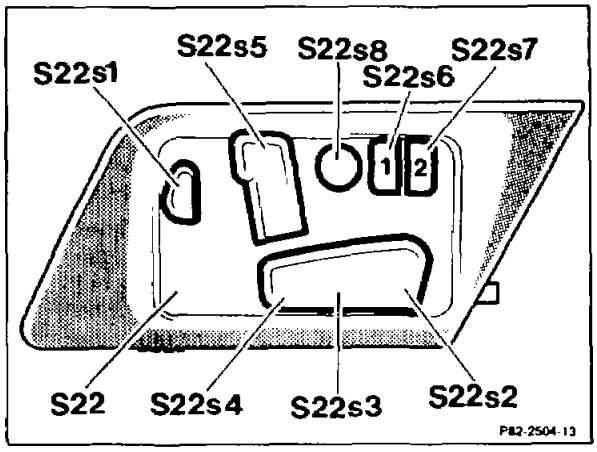

S22	Front left seat adjustment switch
S22s1	Head restraint high/low
S22s2	Seat height front
S22s3	Seat forward/back
S22s4	Seat height rear
S22s5	Backrest
S22s6	Position button 1
S22s7	Position button 2
S22s8	Memory button

The wiring harness is connected to the switch by four plug connectors.

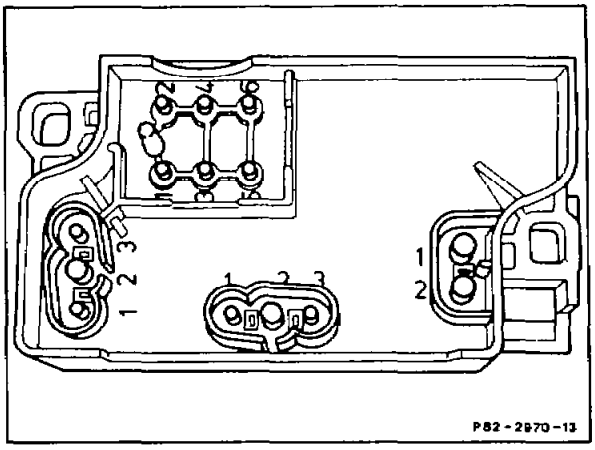

Storing seat and head restraint position

1 Adjust position of the seat and head restraint.

2 Press memory button (S22s8).

3 Press position button (S22s6 or S22s7).

The position button must be pressed within 3 seconds after the memory button (S22s8) otherwise the position is not stored.

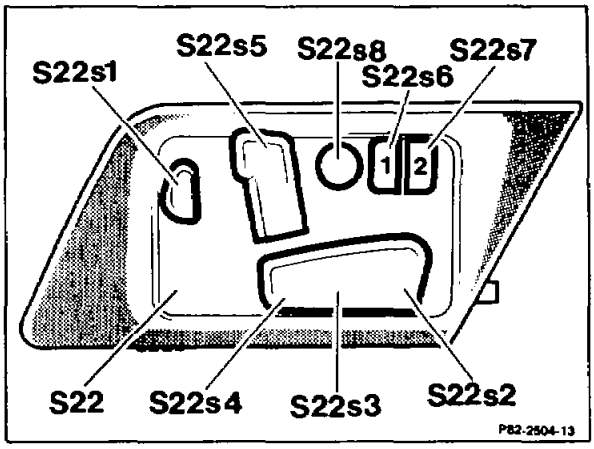

S22 Front left seat adjustment switch
S22s1 Head restraint high/low
S22s2 Seat height front
S22s3 Seat forward/back
S22s4 Seat height rear
S22s5 Backrest
S22s6 Position button 1
S22s7 Position button 2
S22s8 Memory button

Retrieving stored position (seat and head restraint)

Press position button (S22s6) or (S22s7).

For safety reasons, the position button must remain pressed until the end position is reached and all the motors have stopped operating.

If several buttons are pressed simultaneously, the adjustment operation is interrupted. A stored position can then only be reached after again pressing a position button.

Electronic control unit

The front left power seat control unit with memory (N32/1) is positioned below the seat.

Seat adjustment device

The seat is adjusted by a gear (18), which is driven by 3 motors (M7m2, M7m3, M7m4) through 3 shafts (19). These parts are located below the seat.

Each motor is assigned a potentiometer (10a, 11a, 12a) as a position sensor for storing the position. Depending on the seat position a certain resistance flows through the potentiometers to the front left electronic seat adjustment control unit with memory (N32/1) and is stored there.

If a potentiometer is faulty, e.g. at the forward/back seat adjustment motor, the forward/back adjustment is then no longer stored. This does not affect seat adjustment.

The motors, shafts, potentiometers and the gear of the power seat adjustment can be replaced individually.

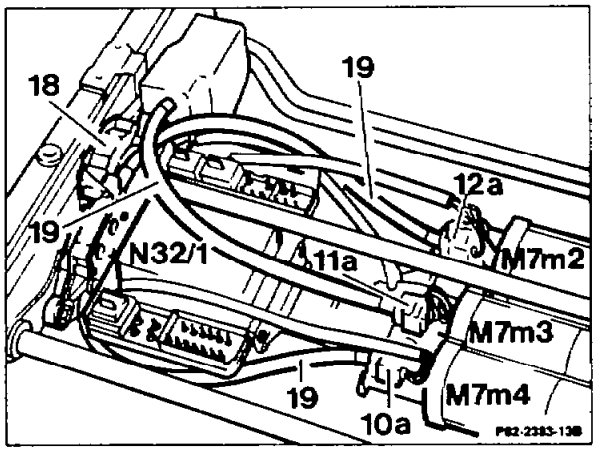

M7m2 Seat height front
M7m3 Seat forward/back
M7m4 Seat height rear
N32/1 Front left seat adjustment control unit with memory

The backrest is adjusted by an additional motor (M7m5) which is fitted to the frame of the backrest and which moves the backrest forward and back by driving a gear.

A potentiometer is integrated in the motor (M7m5) as a position sensor.

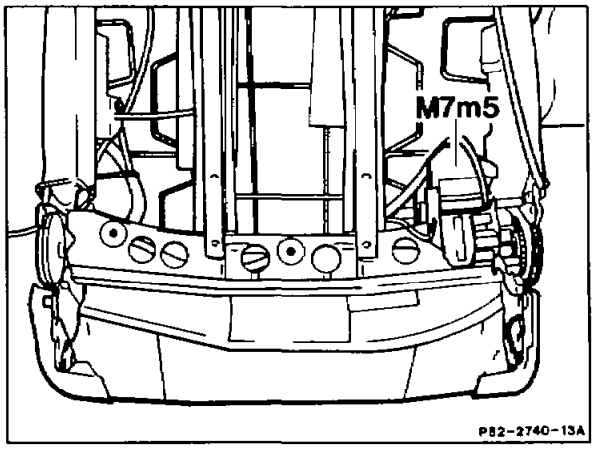

M7m5 Backrest

The motor (M7m1) for adjusting the head restraint is installed in the frame of the backrest.

The head restraint is adjusted by a rack (20) which is driven by a motor through a shaft (21). A replaceable potentiometer (14a) is installed at the motor as a position sensor.

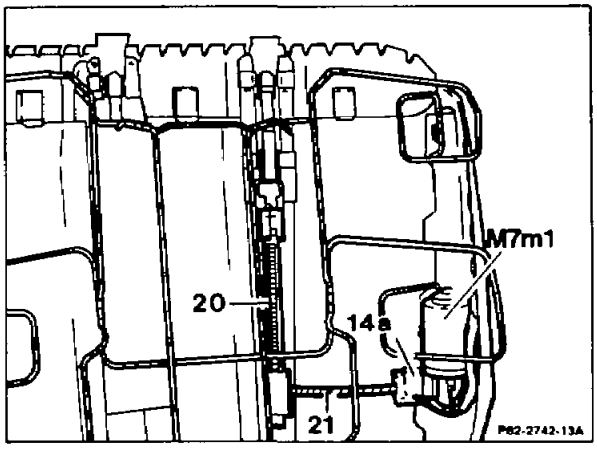

M7m1 Head restraint high/low

Steering column adjustment device

The steering column is adjusted by a gear which is driven by a motor. These parts are attached to the steering column.

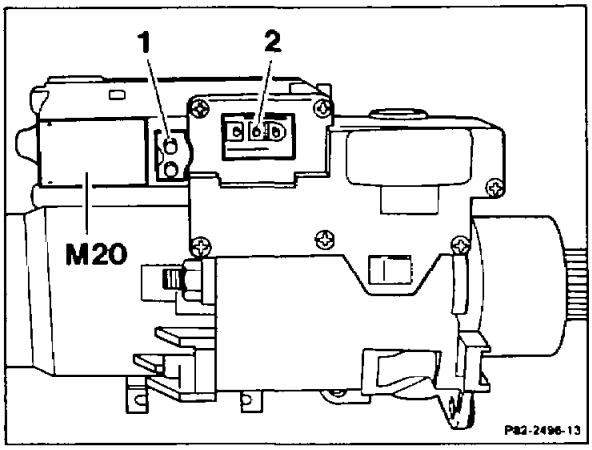

M20 Steering column adjustment motor group
1 Feed
2 Control connection/memory

D. Version with voltage-coded memory control and steering column adjustment as of 07/90

For wiring diagram see Wiring Diagrams Passenger Cars Volume 4.

Operation

The seats are adjusted with the switches S22 and S23 in the left door linings.

The steering column is adjusted with the steering column adjustment switch (S59) on the column casing tube.

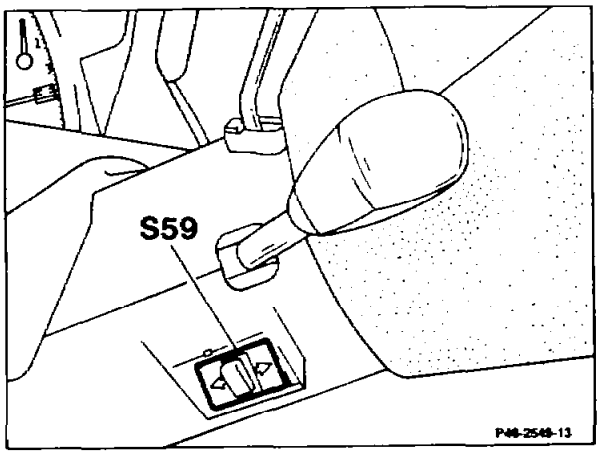

The adjustment can be performed with the key in position 1 or 2 or with the key withdrawn and the driver's door open.

Two steering column, seat and the relevant head restraint positions can be stored and retrieved as required.

All the functions are transmitted voltage-coded along three signal and one ground wires.

Note
The seat memory has a non-volatile memory.

This ensures that the stored seat positions remain stored even when the battery is disconnected from the electrical system, and are not erased after 30 seconds as previously. In addition, the seat adjustment switches with memory are also illuminated.

Storing seat and head restraint position

1 Adjust position of seat and head restraint.

2 Press memory button (S23s8).

3 Press position button (S23s6 or S23s7).

The position button must be pressed within 3 seconds after the memory button otherwise the position is not stored.

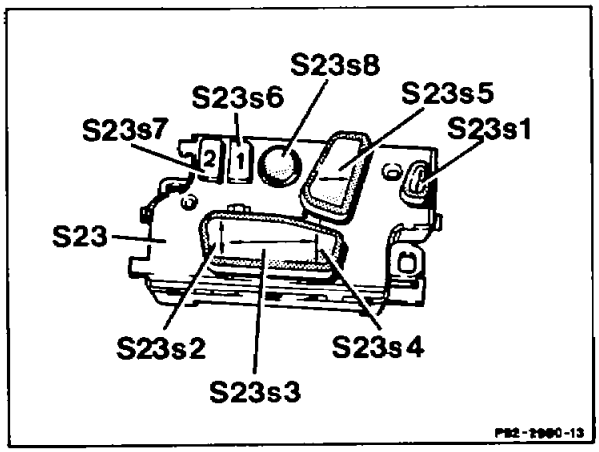

S23 Front right seat adjustment switch
S23s1 Head restraint high/low
S23s2 Seat height front
S23s3 Seat forward/back
S23s4 Seat height rear
S23s5 Backrest
S23s6 Position button 1
S23s7 Position button 2
S23s8 Memory button

Retrieving stored position (seat, head restraint and steering column)

Press position button (S23s6) or (S23s7).

For safety reasons, the position button must remain pressed until the end position is reached and all the motors have stopped operating.

If several buttons are pressed simultaneously, the adjustment operation is interrupted. A stored position can then only be reached after again pressing a position button.

Note
The wiring harnes is connected to the switch by only two connectors.

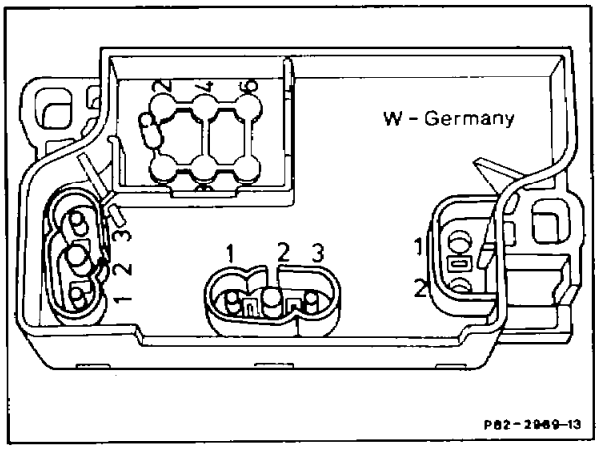

Electronic control unit

The front left seat adjustment control unit with memory (N32/1) is positioned at the bottom of the seat.

Seat adjustment device

The seat is adjusted by a gear (18) which is driven by 3 motors (M7m2, M7m3, M7m4) through 3 shafts (19). These parts are located below the seat.

Each motor is assigned a potentiometer (10a, 11a, 12a) as a position sensor for storing the position. Depending on the seat position, a certain resistance flows through the potentiometers to the front left seat adjustment control unit with memory (N32/1) and is stored there.

If a potentiometer is faulty, e.g. at the forward/back seat adjustment motor, the forward/back adjustment is then no longer stored. This does not affect seat adjustment.

The motors, shafts, potentiometers and the gear of the power seat adjustment can be replaced individually.

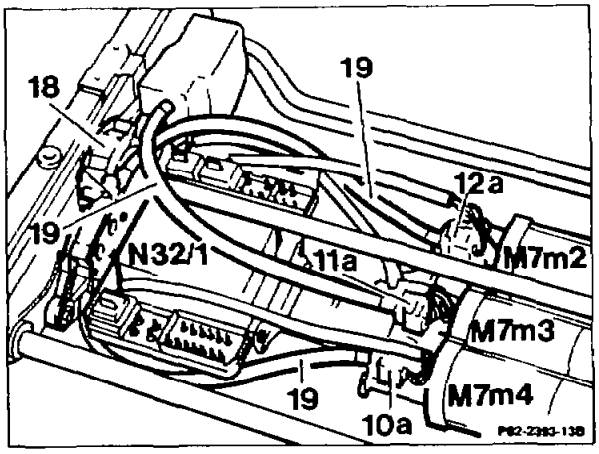

M7m2 Seat height front
M7m3 Seat forward/back
M7m4 Seat height rear
N32/1 Front left seat adjustment control unit with *memory*

The backrest is adjusted by an additional motor (M7m5) which is attached to the frame of the backrest and adjusts the backrest forward and back directly by driving a gear.

A potentiometer is integrated in the motor (M7m5) as a position sensor.

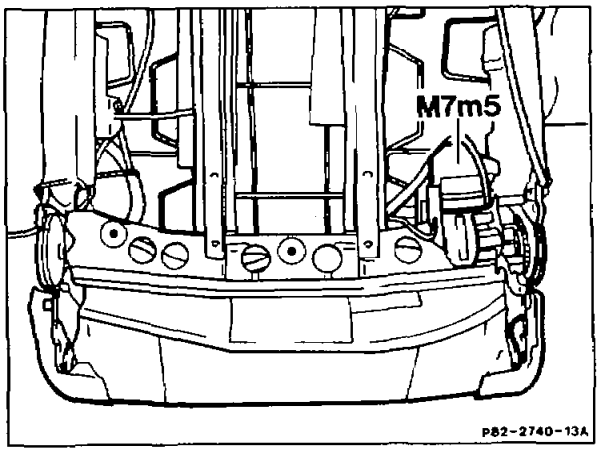

M7m5 Backrest

The motor (M7m1) for adjusting the head restraint is installed in the frame of the backrest.

The head restraint is adjusted by a rack (20) which is driven by a motor through a shaft (21). A replaceable potentiometer (14a) is installed at the motor as a position sensor.

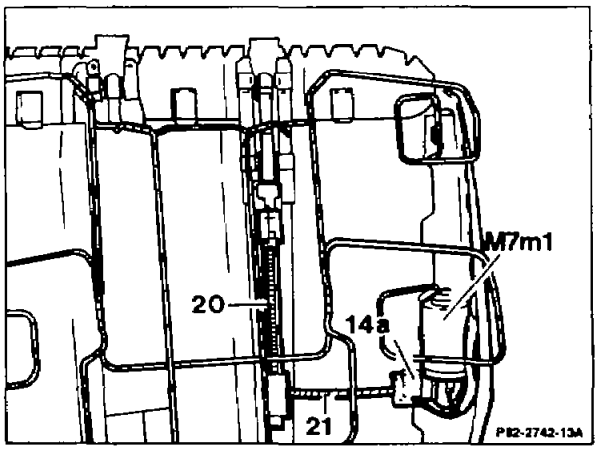

M7m1 Head restraint high/low

Steering column adjustment device

The steering column is adjusted by a gear which is driven by a motor (M20). These parts are attached to the steering column.

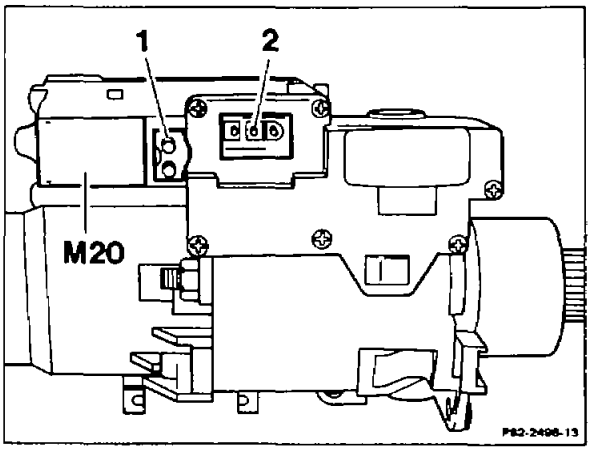

M20 Steering column adjustment motor group
1 Feed
2 Control connection/memory

82–0866 Testing voltage-coded switch for power seat adjustment with memory as of 06/90

Operation no. of operation texts and work units or standard texts and flat rates:

A. Measuring resistance at seat adjustment switch

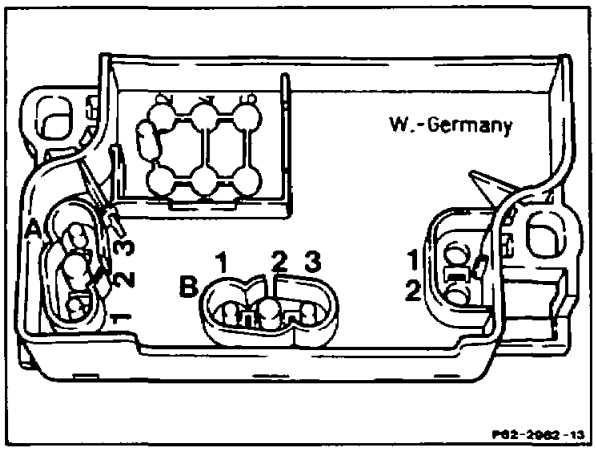

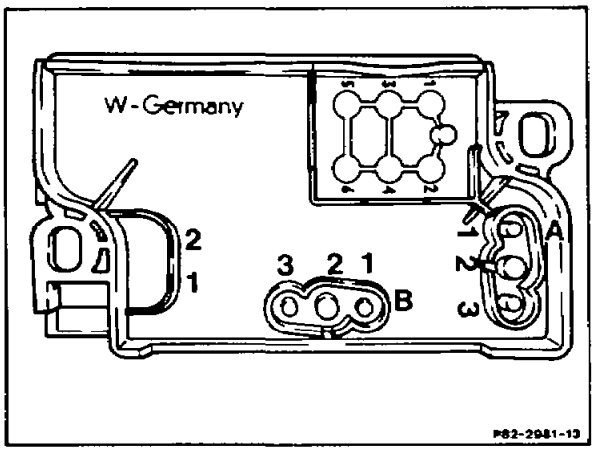

Switch position	Measurement at switch between: Coupling A and coupling B		Resistance measurements *
	Left-hand switch	Right-hand switch	
Memory board 1 Height adjustment rear high Height adjustment rear low Seat adjustment forward Seat adjustment back	Coupling A pin 1 and Coupling B pin 1	Coupling A pin 3 and Coupling B pin 1	286.96 ohms 155.22 ohms 72.53 ohms 42.17 ohms 15.88 ohms
Memory board 2 Head restraint high Head restraint low Height adjustment front high Height adjustment front low	Coupling A Pin 1 and 3	Coupling A Pin 1 and 3	286.96 ohms 155.22 ohms 72.53 ohms 42.17 ohms 15.88 ohms
Memory Backrest forward Backrest back	Coupling A pin 1 and Coupling B pin 3	Coupling A pin 3 and Coupling B pin 3	286.96 ohm 42.17 ohms 15.88 ohms
No operation	Coupling A pin 1 and Coupling B pin 1	Coupling A pin 3 and Coupling B pin 1	2.2 K ohms
No operation	Coupling A Pin 1 and 3	Coupling A Pin 3 and pin 1	2.2 K ohms
No operation	Coupling A pin 1 and Coupling B pin 3	Coupling A pin 3 and Coupling B pin 3	2.2 K ohms

* Tolerance ±1 %

B. Measuring resistance at 10-pin coupling at control unit

Couplings at seat adjustment switch plugged in

Switch position	Measurement at 10-pin coupling of switch and memory electronic control between:	Resistance measurements *
Memory board 1	Contact 4 (ws/br) and contact 3 (ws/ge)	286.96 ohms
Height adjustment rear high	Contact 4 (ws/br) and contact 3 (ws/ge)	155.22 ohms
Height adjustment rear low	Contact 4 (ws/br) and contact 3 (ws/ge)	72.53 ohms
Seat adjustment forward	Contact 4 (ws/br) and contact 3 (ws/ge)	42.17 ohms
Seat adjustment back	Contact 4 (ws/br) and contact 3 (ws/ge)	15.88 ohms
Memory board 2	Contact 4 (ws/br) and contact 2 (ws/rt)	286.96 ohms
Head restraint high	Contact 4 (ws/br) and contact 2 (ws/rt)	155.22 ohms
Head restraint low	Contact 4 (ws/br) and contact 2 (ws/rt)	72.53 ohms
Height adjustment front high	Contact 4 (ws/br) and contact 2 (ws/rt)	42.17 ohms
Height adjustment front low	Contact 4 (ws/br) and contact 2 (ws/rt)	15.88 ohms
Memory	Contact 4 (ws/br) and contact 1 (ws/gn)	286.96 ohms
Backrest forward	Contact 4 (ws/br) and contact 1 (ws/gn)	42.17 ohms
Backrest back	Contact 4 (ws/br) and contact 1 (ws/gn)	15.88 ohms
No operation	Contact 4 (ws/br) and contact 3 (ws/ge)	2.2 K ohms
No operation	Contact 4 (ws/br) and contact 2 (ws/rt)	2.2 K ohms
No operation	Contact 4 (ws/br) and contact 1 (ws/gn)	2.2 K ohms

* Tolerance ±1 %

If the resistances measured in tests A and B do not agree with the specified resistances, look for the fault in the wiring harness.

C. Testing seat adjustment motors

Unplug coupling to respective seat adjustment motor at the control unit (N32/1 or N32/2).
Connect seat adjustment motor to a voltage source using the security cable
(Part no. 124 589 37 63 00), and test operation.

Seat adjustment motor	Connection
Seat adjustment forward/back (VZ)	Contact 1 and contact 2
Seat height adjustment rear (HH)	Contact 1 and contact 2
Seat height adjustment front (VH)	Contact 1 and contact 2
Backrest adjustment (L)	Contact 1 and contact 2
Head restraint (K)	Contact 1 and contact 4

If no fault is found at the switches, the wiring and the motors, the control unit (N32/1 or N32/2) must be replaced.

Commercially available tools

Multimeter	e.g.	Sun DMM-5 FLUKE 23 DB

Operation no. of operation texts and work units or standard texts and flat rates:

See Wiring Diagrams Passenger Cars Volume 4.

Closing the windows

Turn key in door or trunk lock to "lock" position and hold in this position. The windows begin to close automatically after about 1 second.

The closing operation can be interrupted by turning the key back to the initial position. To continue the closing operation, the key must first be moved into the "unlock" position and then again turned into the "lock" position.

⚠

If there is a risk of anything becoming jammed in the windows, the windows can be opened again within about 10 seconds after operating the closing control. To do this, turn key into "unlock" position and hold in this position.

Note

If the key in the trunk lock is turned fully to the right to position 4, the windows are not operated and remain open.

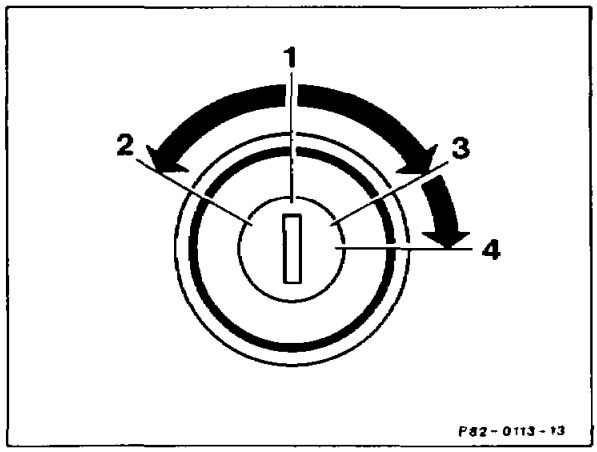

1 Starting position
2 Unlock
3 Lock
4 Separate locking

Driver door lock, front passenger door lock and trunk lock are each fitted with a microswitch for operating the convenience control. The central control unit is housed on the left below the rear seat squab.

Opening front windows down to end position using power window switch

If the power window switch is pressed beyond the "open" pressure point, the front windows open automatically down to the end position. The automatic opening operation is terminated if the power window switch is pressed in the "open" or "close" direction.

Operation no. of operation texts and work units or standard texts and flat rates:

Note
For wiring diagrams of power windows and power window convenience control, see Wiring Diagrams Passenger Cars Volume 4.

Power windows/seat adjustment convenience control
The convenience control circuitry has been modified (09/88). Diode and positively controlled left and right front door contacts are no longer fitted. The function of the diode is assumed by an electronic relay (K24) which is located in bay A in the fuse and relay box.

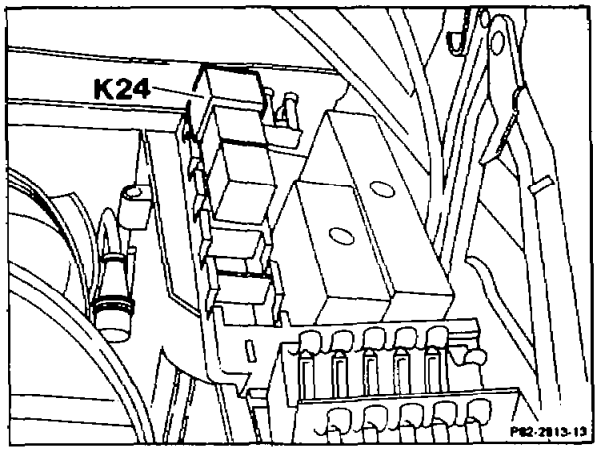

2 power windows (as of 09/88 – 09/89)

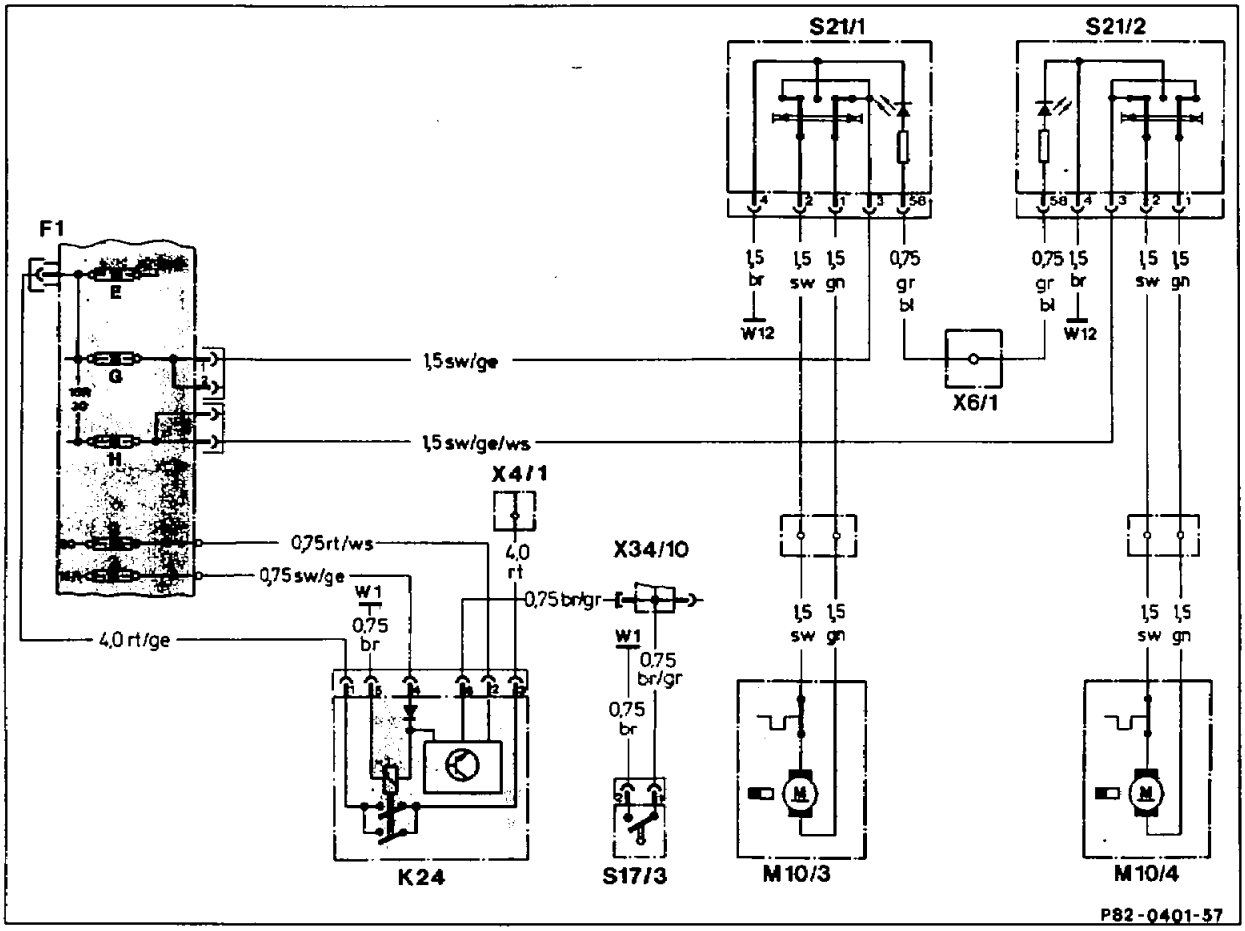

F1	Fuse and relay box
K24	Convenience control relay
M10/3	Front left power window motor
M10/4	Front right power window motor
S17/3	Front left door contact switch
S21/1	Front left window switch
S21/2	Front right window switch
W1	Main ground (behind instrument cluster)
W12	Centre console ground
X4/1	Terminal block, terminal 30/interior (2-pin)
X6/1	Terminal block, terminal 58D m(2-pin)
X34/10	Multiple connector, front left door contact switch

4 power windows (as of 09/88 – 09/89)

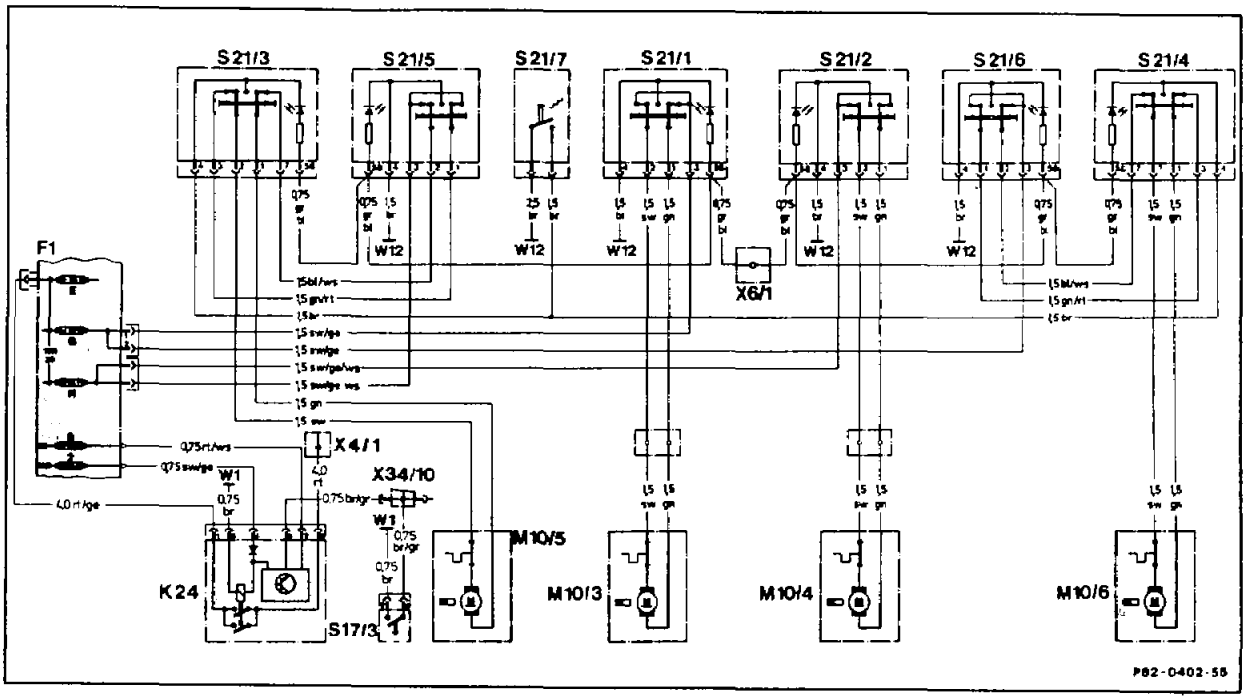

F1	Fuse and relay box
K24	Convenience control relay
M10/3	Front left power window motor
M10/4	Front right power window motor
M10/5	Rear left power window motor
M10/6	Rear right power window motor
S17/3	Left front door contact switch
S21/1	Front left window switch
S21/2	Front right window switch
S21/3	Rear left window switch
S21/4	Rear right window switch
S21/6	Rear right window switch (front console)
S21/7	Rear power windows safety switch
W1	Main ground (behind instrument cluster)
W12	Centre console ground
X4/1	Terminal block, terminal 30/interior (2-pin)
X6/1	Terminal block, terminal 58D (2-pin)
X34/10	Multiple connector, front left door contact switch

82–0980 Function of anti-theft warning system (EDW) Standard and (USA) versions

For wiring diagrams see Wiring Diagrams Passenger Cars Volume 3.1 and 4.

A. General

The anti-theft warning system is a contact-controlled system with an audible alarm signal. After the alarm is activated, the audible warning sounds intermittently for about 30 seconds by means of an additional horn.

(USA)
The anti-theft warning system is a contact-controlled system with an audible and a visual alarm signal. After the alarm has been activated, the audible warning sounds intermittently for about 60 seconds by means of an additional horn and once again for 60 seconds after an interval of about 30 seconds.

Parallel to this, the low beam and the tail lights flash for about 150 seconds. If the side (tail) or parking lamp is switched on when the alarm is activated, only the low beam headlamps flash.

The anti-theft warning system is combined with the locking system. Up to 08/87 the anti-theft warning system can be switched on and off only with the main key at the front doors and at the trunk lock.

With effect from 09/87 the system can also be switched on and off with the secondary key.

The following parts of the car are incorporated in the security system:

- all car doors
- hood and trunk lid
- radio (removal)
- brakes (operation)
- ignition (operation, short-circuiting)
- change in attitude of car at one side (towing-away protection) no longer fitted as of 03/87, for (USA) as of 07/86

If the car is transported by car ferry or on a car-carrying train, or is parked in a double-decker style garage, the system must not be switched on otherwise the alarm will be unintentionally activated. In this case, the car should be locked only with the secondary key.

Car keys
The following keys are supplied with models fitted with anti-theft warning system:

Main key, 2 keys – with angular grip and red clip. The car can be fully operated with this key. The anti-theft warning system is switched on or off from the lock of the front left and front right doors and also from the trunk lid lock.

Main key, 1 key – as replacement key, welded in transparent plastic cover.

Up to 08/87
Secondary key, 1 key – with rounded grip. All points on the car can be operated with this key except for the glove box lock and trunk lid lock. Please note that the anti-theft warning system cannot be switched on or off in this case.

As of 09/87
Secondary key, 1 key – with rounded grip. All points on the car can be operated with this key except for the glove box lock and trunk lid lock. The anti-theft warning system cannot be switched on or off at the lock of the front right and front left doors.

Replacement keys can be ordered by stating the code number or lock number.

Lock cylinder and switch are a unit and can only be replaced complete.

(USA) Radio anti-theft protection

If the radio is removed when the anti-theft warning system is switched on, the radio set is rendered unusable and will only operate after being repaired at the maker's Becker.

Arrangement diagram

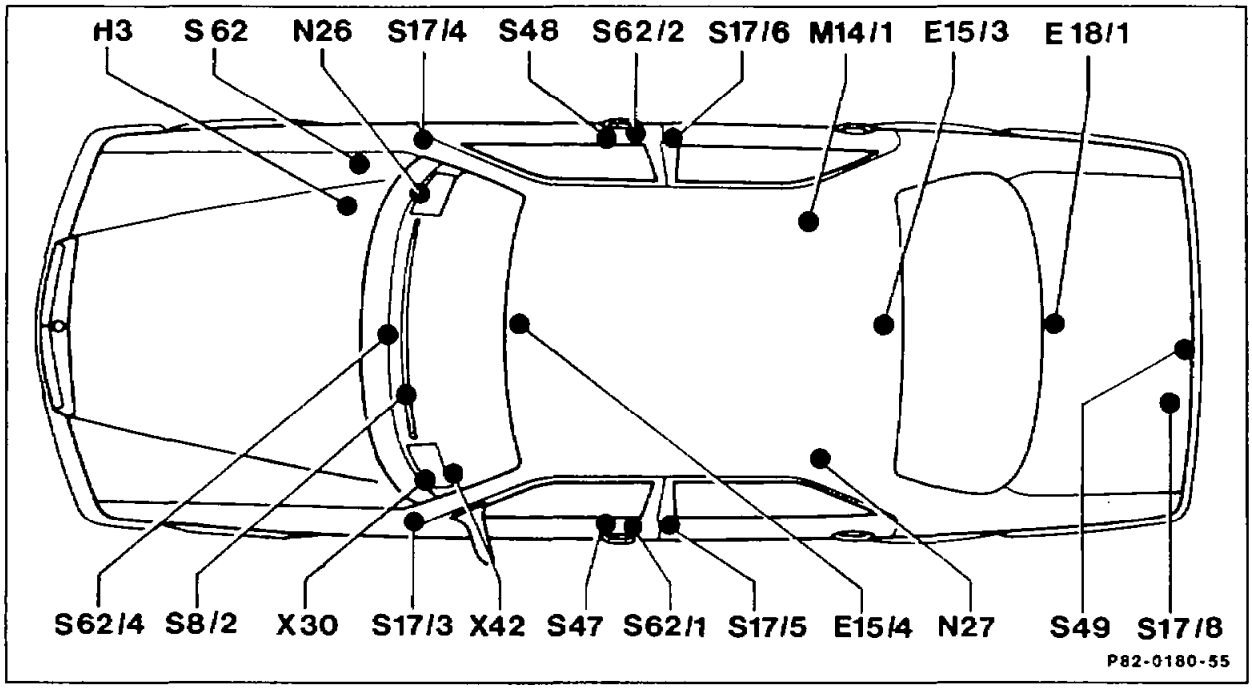

E15/3	Rear dome lamp
E15/4	Dome lamp with reading lamp and seat belt reminder
E18/1	Trunk lamp
H3	Alarm signal horn
M14/1	Central locking system supply pump
N26	Anti-theft warning system (EDW) control unit
N27	Anti-towing sensor (not applicable as of 03/87, (USA) as of 07/86)
S8/2	Warning buzzer contact, exterior light/central locking sytsem
S17/3	Front left door contact switch
S17/4	Front right door contact switch
S17/5	Rear left door contact switch
S17/6	Rear right door contact switch
S17/8	Trunk lamp switch
S47	Front left door actuator
S48	Front right door actuator
S49	Trunk lid lock actuator
S62	Hood switch, anti-theft warning system
S62/1	Front left door switch, anti-theft warning system
S62/2	Front right door switch, anti-theft warning system
S62/4	Radio security contact, anti-theft warning system
X30	Plug connection, optional equipment block
X37/1	Plug connection, anti-theft warning system wiring harness, front left door (not applicable as of 09/87)
X37/2	Plug connection, anti-theft warning system wiring harness, front right door (not applicable as of 09/87)
X42	Plug connection, front/rear anti-theft warning system

B. Switching system on and off

Switching system on

When the front left or front right door is closed, the switch (wiring diagram item S62/1 and S62/2, respectively) is actuated at the same time. The "negative" which is supplied to the switch along the brown cable (connection no. 1) is connected to the yellow/blue cable (connection no. 3) and switched as a pulse to the ATA control unit (N26, connection no. 6 of 8-pin connector). The system is switched on.

When the trunk is closed, the system is switched on by the actuator of the central locking system at the trunk lid lock. The negative voltage which exists at the actuator (S49) (brown/white cable, connection no. 3) is passed via the 3-pin plug connection (X43) with the yellow cable to the ATA control unit (N26, connection no. 4 of the 14-pin connector). The system is switched on.

If a door, the hood or the trunk lid is opened, if the radio is removed, if the ignition lock is switched on or jumpered, or if the service brake is operated, the control unit is activated through the respective contact switch and the alarm triggered.

If the attitude of the protected vehicle is altered at one side, the alarm is likewise triggered.

An additional device developed as a towing-away protection triggers the alarm as follows:
- change in attitude of longitudinal axis by 2.2°
- change in attitude of transverse axis by 1.2°

In other words, if the vehicle is raised, the alarm must be activated after not more than 100 mm (measured at wheelhouse).

Note
Towing-away protection no longer fitted as of 03/87, (USA) 07/86.

The system has a cut-in delay of 15 seconds. If individual doors remain open for longer than 15 seconds to remove objects after the system has been switched on, the alarm is not activated after this time delay has elapsed. If the door is closed, this area is switched on, in other words if the door is re-opened, the alarm is triggered.

Alarm signal

Basic version
The alarm horn (H3) is activated intermittently by the control unit for about 30 seconds. This alarm of about 30 seconds' duration continues to sound even if the activator (e.g. the door) is immediately closed again.

(USA) Version

The audible alarm horn is activated by the control unit intermittently for about 60 seconds and, following an interval of about 30 second, for a further 60 seconds. The visual alarm signal flashes simultaneously for about 150 seconds. The alarm remains operating even if the activator (e.g. the door) is immediately closed again.

Switching off system

If the front left or front right door is opened, the respective switch (wiring diagram item S62/1 and S62/2, respectively) is activated at the same time. The negative voltage applied to the switch along the brown cable (connection no. 1) is connected with the green/yellow cable (connection no. 2) and is switched as a pulse to the ATA control unit (N26, connection no. 7 of the 8-pin connector). The system is switched off.

If the trunk is opened, the system is switched off by the actuator of the central locking system at the trunk lid lock. The positive voltage which exists at the actuator (S49) is connected through the 3-pin plug connections (X43) to the yellow cable and to the ATA control unit (N26, connection no. 4 of the 14-pin connector). The system is switched off.

C. Location of components

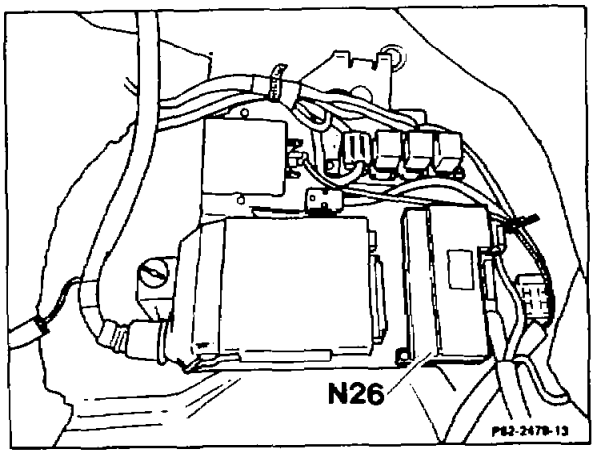

N26 ATA control unit
(in right footwell, below footrest)

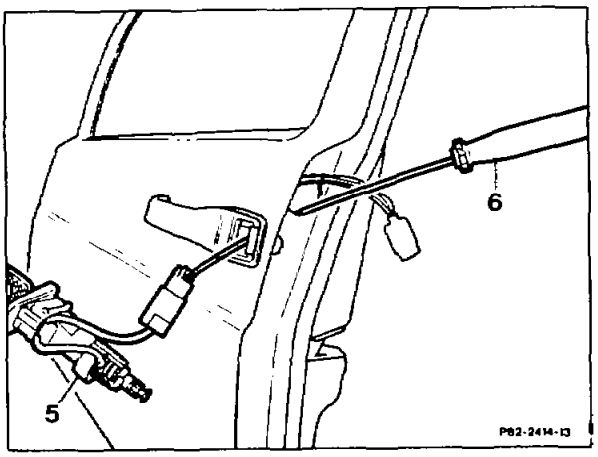

5 Front left door switch at lock (S62/1)
6 Assembly tool

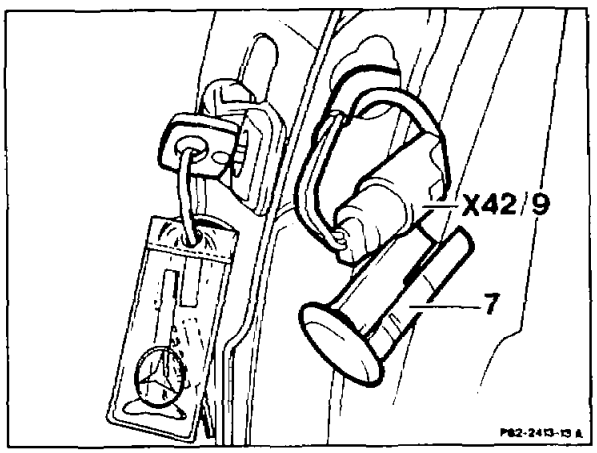

N62/1 Plug connection, anti-theft warning system wiring harness, front left door
7 Cover

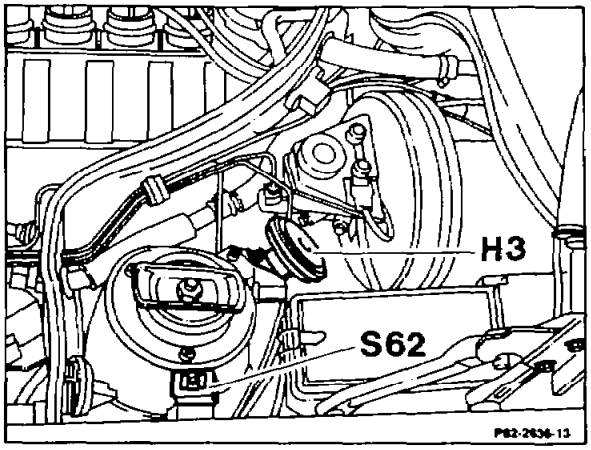

H3 Alarm horn
S62 Hood switch

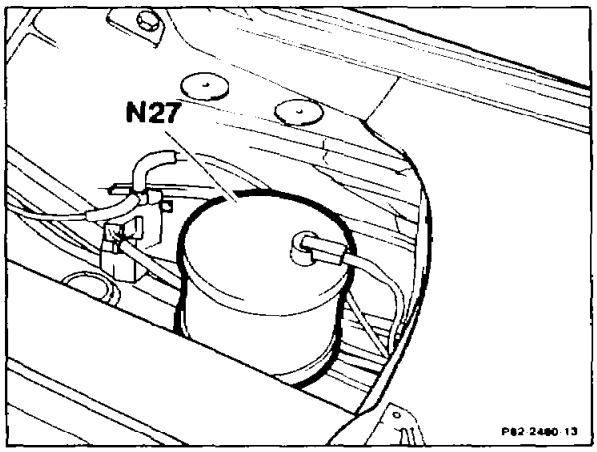

N27 Anti-towing sensor
(n.a. as of 03/87, USA as of 07/86)

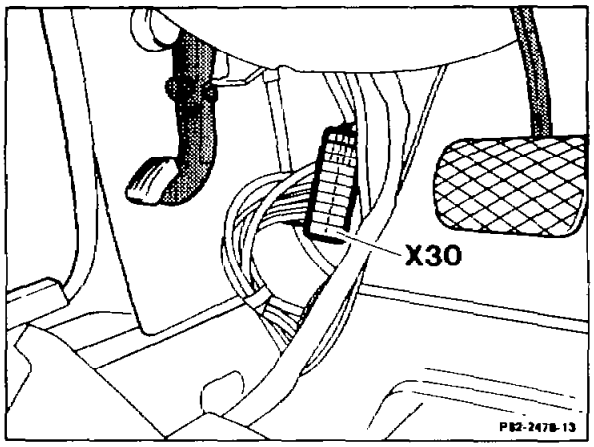

X30 Plug connection, optional equipment block

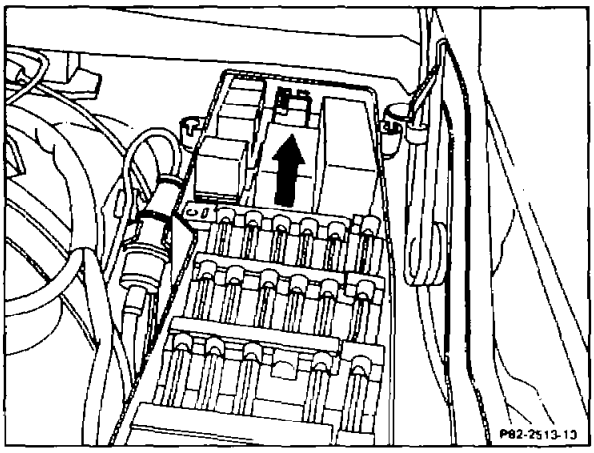

Auxiliary fuse box, anti-theft warning system USA

S62/4 Security contact, anti-theft warning system/radio up to 08/86

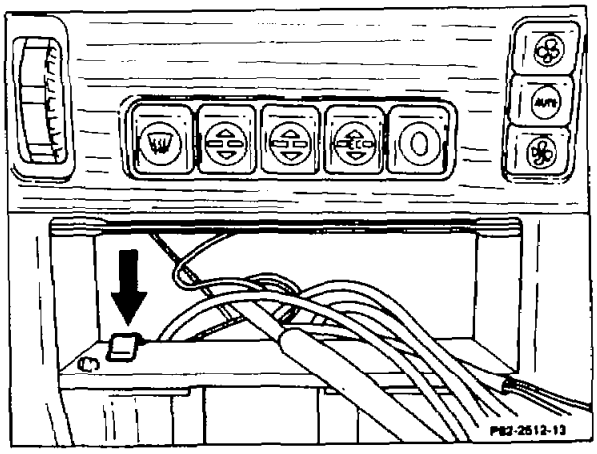

X42/13 Plug connection, anti-theft warning system/radio (1-pin) as of 09/86

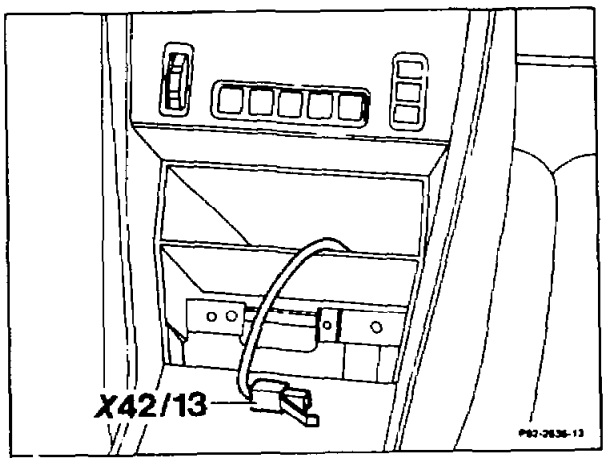

Operation no. of operation texts and work units or standard texts and flat rates:

A. Standard version as of model year 1986

For wiring diagrams see Wiring Diagrams Passenger Cars Volume 3.1 and 4.

Special tool

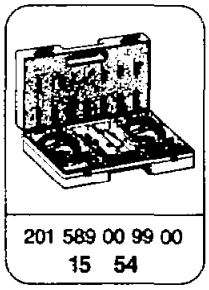

201 589 00 99 00
15 54

Commercially available tester

Multimeter	e.g.	Sun DMM-5

Note
The electrical connection set 201 589 00 99 00 must be enlarged by two cables, order no. 809509.

Test steps

1. Test voltage supply for control unit.
2. Test switching on and off anti-theft warning system.
3. Test tripping contacts and wiring.
4. Test audible alarm signal and wiring.

Preparation for all test steps

1 Test fuse C.

2 Unplug 8-pin and 14-pin connector from the ATA control unit N26.

3 Check contacts of couplings to ensure the soldered connections and electrical contacts are good. Check the contacts with a gauge; they must not be widened.

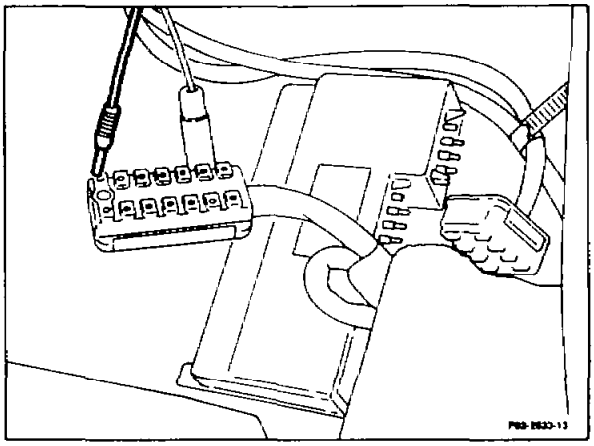

Note
The connector of cable no. 809509 from the electrical connection set 201 589 00 99 00 can be used as a gauge.

Test step 1

Test voltage supply for ATA control unit N26 at 8-pin connector.

Multimeter to contact 5 (+) of 8-pin coupling, contact 2 (–) of 14-pin coupling.

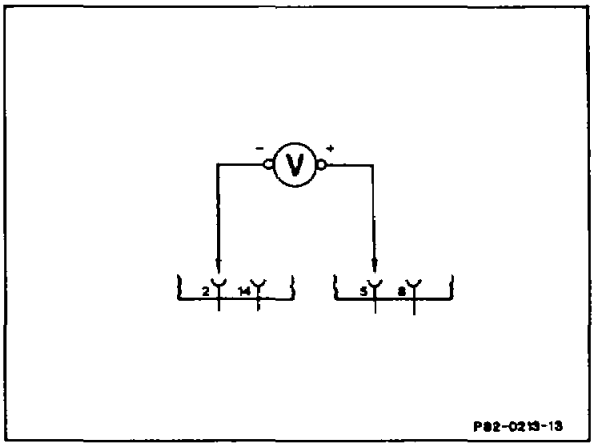

Specification >11 V

Yes	No

Test red/white cable from contact 5 up to fuse C and brown cable from contact 2 (terminal 31) to ground point W3 for open circuit; rectify any open circuit.

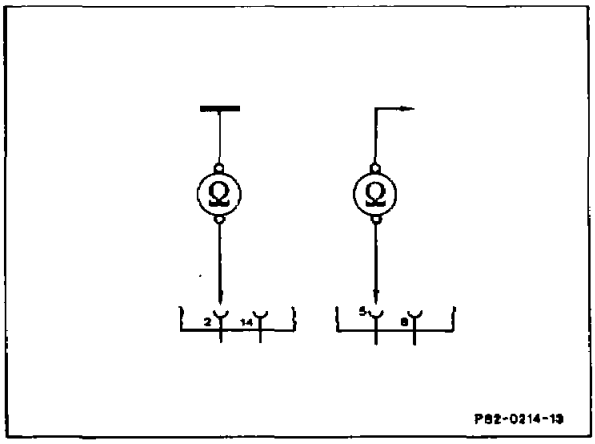

Test step 2

Testing switching anti-theft warning system on and off. Test operation of switch at locks of front left and front right doors and test wiring from the switches to the 8-pin connector of the ATA control unit N26 for open circuit.

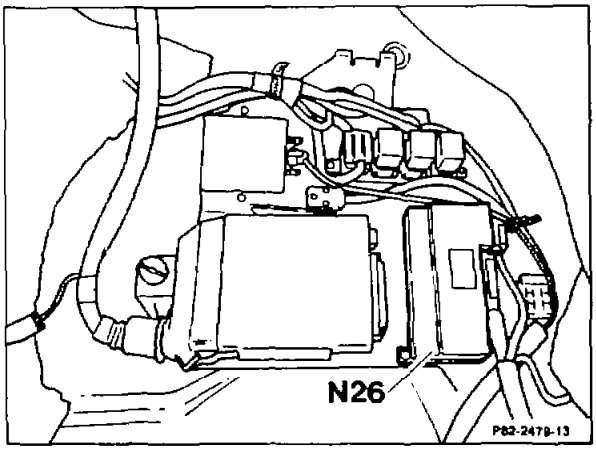

1. Switching on anti-theft warning system

Multimeter to contact 6 and to ground. Turn key in left-hand door to the right and in right-hand door to the left and hold tight.

Specification < 0.5 Ω

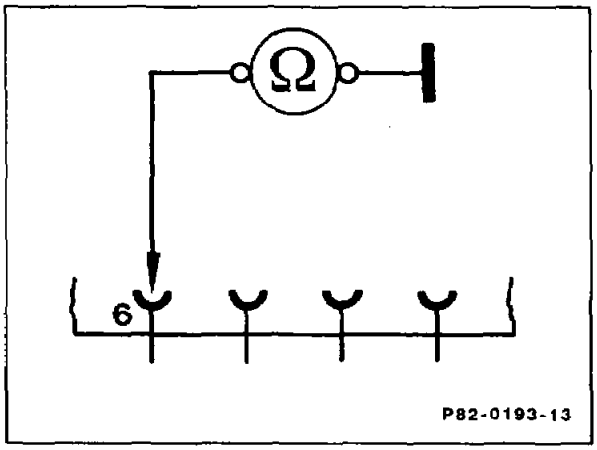

2. Switching off anti-theft warning system

Multimeter to contact 7 and to ground.
Turn key in left-hand door to the left and in right-hand door to the right and hold tight.

Specification < 0.5 Ω

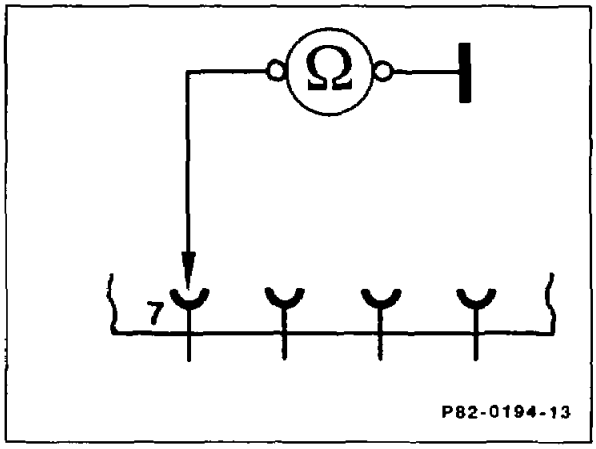

Yes	No

Remove plug connection (S62/1) of left-hand or right-hand door.

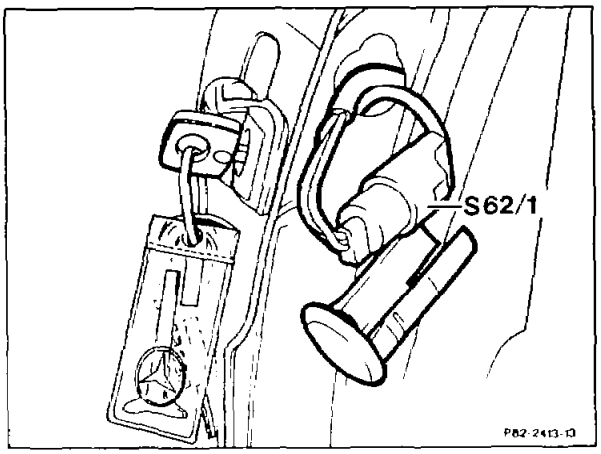

Test step 2.1

Test operation of switch at the locked cylinders of the front left and front right doors.

Note
Before switching on anti-theft warning system when door is open, the rotary tumbler of the front left door lock (arrow) must be moved into the "door closed" position. Before closing the front left door, the rotary tumbler on the inside door mechanism must be moved into the "door open" position.

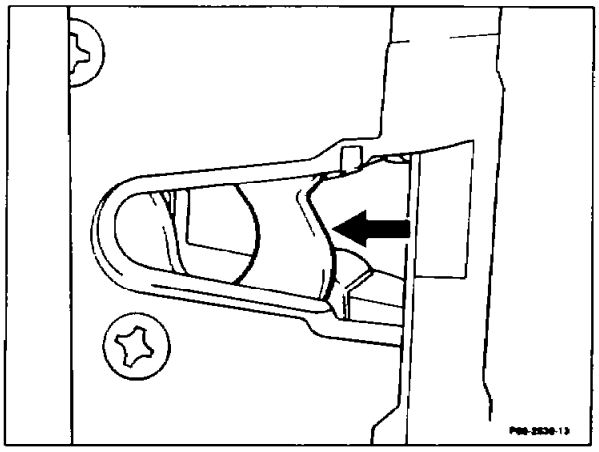

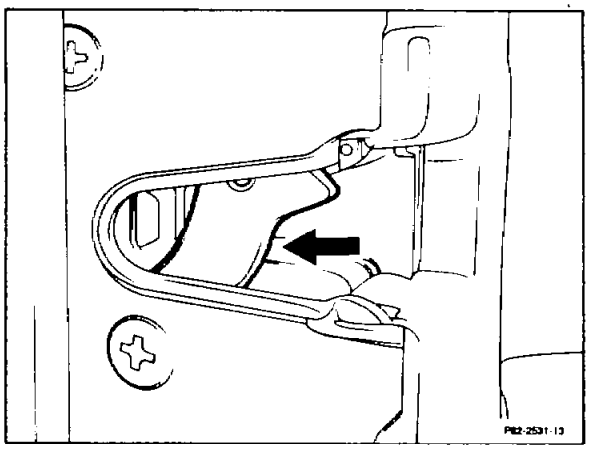

1. Anti-theft warning system switch on

Multimeter to connectors 1 and 3

Turn key in left-hand door to the right and in right-hand door to the left and hold tight.

Specification < 0.5 Ω

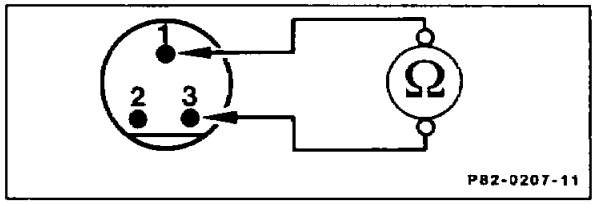

2. Anti-theft warning system switch off

Multimeter to connectors 1 and 2

Turn key in left-hand door to the left and in right-hand door to the right and hold tight.

Specification < 0.5 Ω

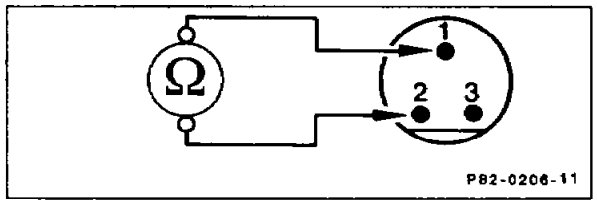

Yes	No

Replace locked cylinders of left-hand or right-hand door, respectively.

Test brown cable from contact 1, green/yellow cable from contact 2 and yellow/blue cable from contact 3 for open circuit. The cables run through the plug connections X42/9* and X42/10* to the 8-pin connector of the ATA control unit N26 (see wiring diagram). If no open circuit is found, replace ATA control unit N26.

* Not applicable as of 09/87

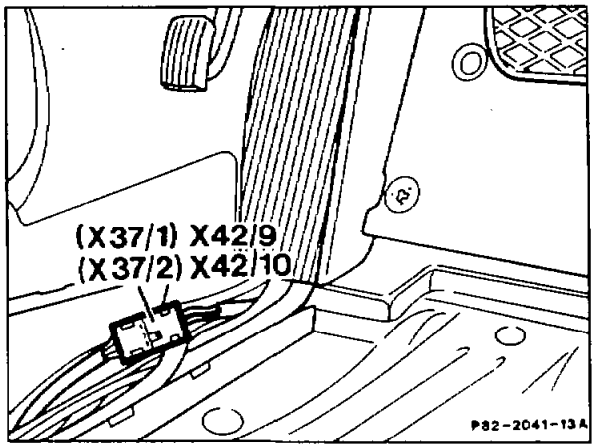

Test step 2.2

Test switching anti-theft warning system on and off at trunk lid lock. It is assumed that the car can be locked and unlocked centrally from the trunk lid lock.

Test wiring between connector of plug connection X43 and of the 14-pin connector of the ATA control unit N26 for open circuit.

Multimeter to connector and contact

1	4
2	6
3	5

Specification <0.5 Ω

Yes	No

Rectify open circuit.

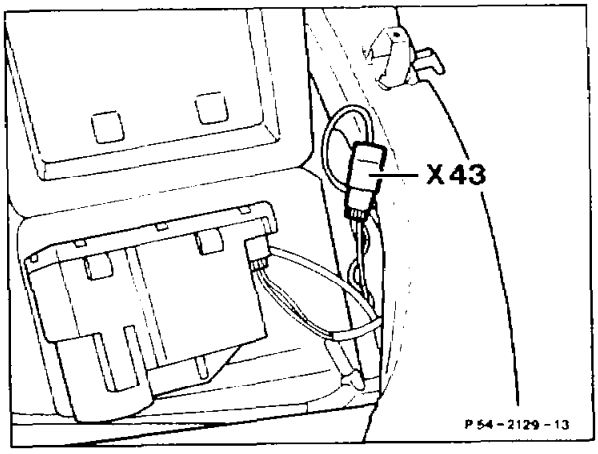

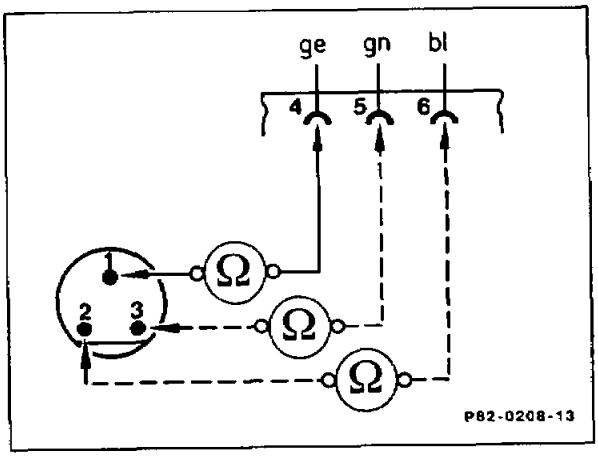

Test step 3

Test triggering contacts and wiring at 14-pin connector of ATA control unit N26.

Note
If the anti-theft warning system is switched on (car parked and locked), the alarm is tripped after a cut-in delay of about 10 seconds by the following tripping points:

3. If the front left or front right door is opened.
3.1 If the rear left or rear right door is opened.
3.2 If the hood is opened.
3.3 If the trunk lid is opened.
3.4 If the radio is removed.
3.5 If the key is turned in the steering lock to position 2 (ignition on).
3.6 If the service brake is operated.
3.7 If the car is towed away.*

Test tripping contact (door contact switches) of the front left and front right doors.

Multimeter to contact 5 (+) of 8-pin connector, contact 7 (–) at 14-pin connector.

Door opened	specification	> 11 V
Door closed	specification	0 V

* Not applicable as of 03/87

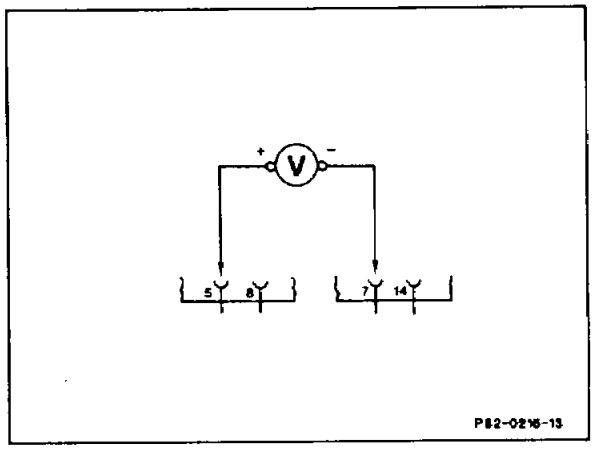

Yes	No

Test brown/gray cable from contact 7 up to right or left door contact switch, respectively, for open circuit or short to ground; rectify any open circuit or short circuit.

Test step 3.1

Test tripping contact (door contact switches) of the rear left and rear right doors.

Multimeter to contact 5 (+) of 8-pin connector, contact 8 (–) of 14-pin connector.

Door opened	specification	> 11 V
Door closed	specification	0 V

Yes	No

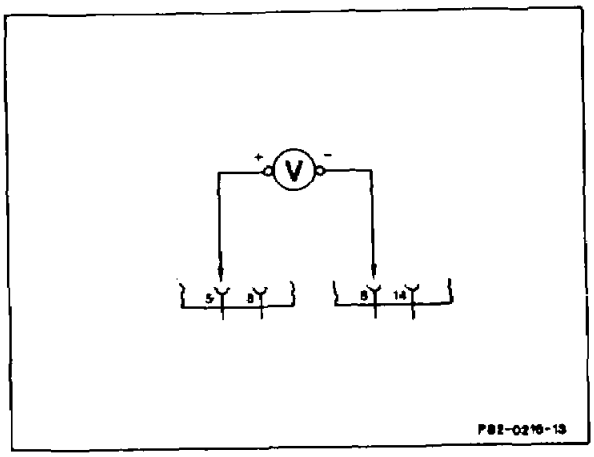

Test brown/green black cable from contact 8 up to left or right door contact switch for open circuit or short circuit to ground; rectify any open circuit or short circuit.

Note
The cable runs via plug connection X42 (see wiring diagram).

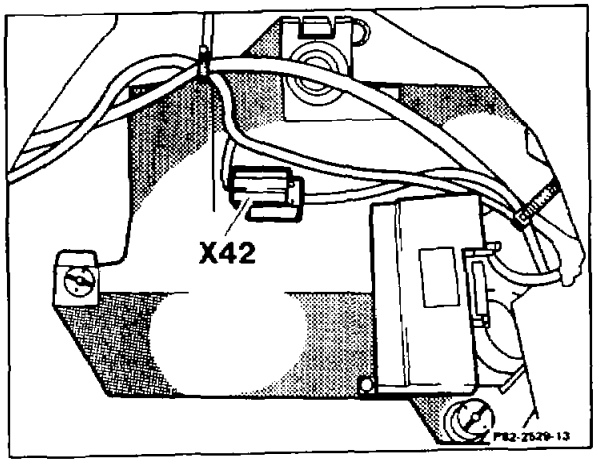

Test step 3.2

Test hood switch (S62).

Note
The hood switch must be pressed about 10 mm when the hood is closed.

As a check, wrap a wire around the pin of the switch and attach it so that it can be pushed upward when the pin is pressed in.

Close hood and open it again and measure the distance by which the wire has been pushed up.

Multimeter to contact 5 (+) of 8-pin connector, contact 9 (–) of 14-pin connector.

Hood opened	specification	> 11 V
Hood closed	specification	0 V

Yes	No

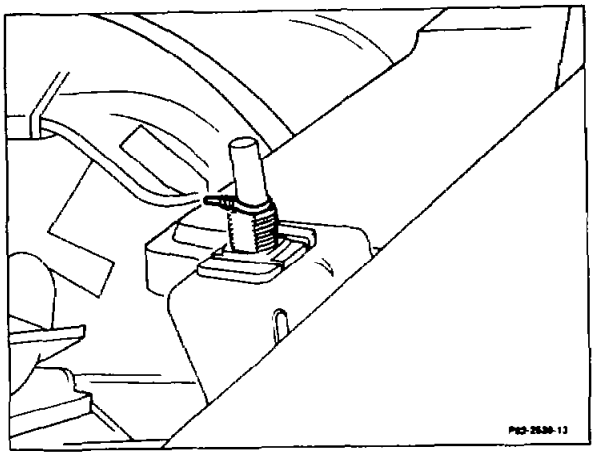

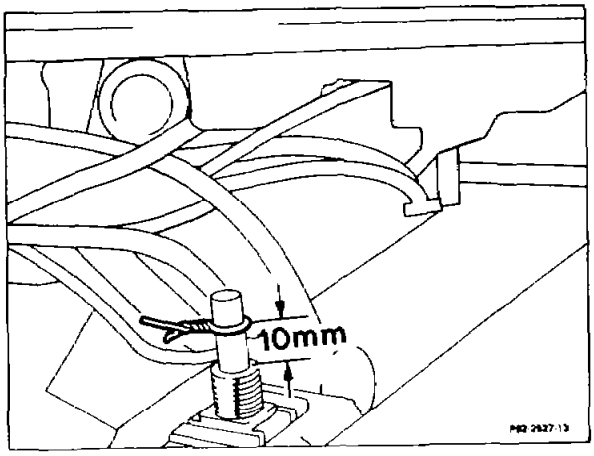

Test brown/red cable from contact 9 up to switch and the switch itself for open circuit or short circuit to ground; rectify any open circuit or short circuit.

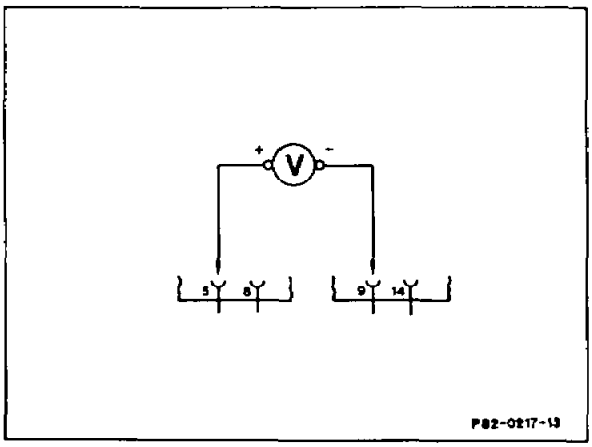

Test step 3.3

Tripping contact of trunk lid switch

Multimeter to contact 5 (+) at 8-pin connector, contact 10 (–) at 14-pin connector

Trunk lid opened	specification	> 11 V
Trunk lid closed	*specification*	0 V

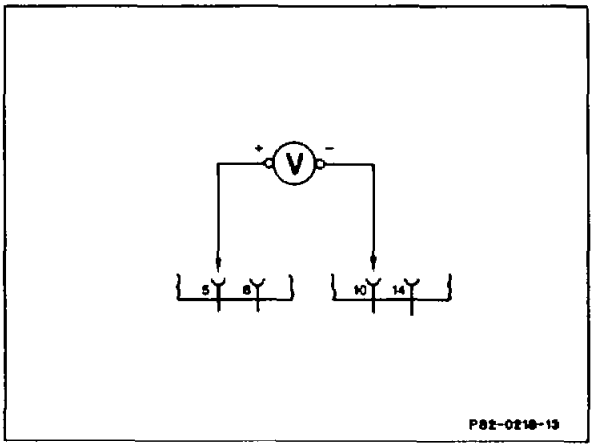

Yes	No

Test black cable from contact 10 up to the switch for open circuit or short circuit to ground; rectify any open circuit or short circuit.

Test step 3.4

Test tripping contact of radio (radio security contact).

Multimeter to contact 5 (+) of 8-pin connector, contact 12 (–) of 14-pin connector

Radio fitted	specification	> 11 V
Radio removed	specification	0 V

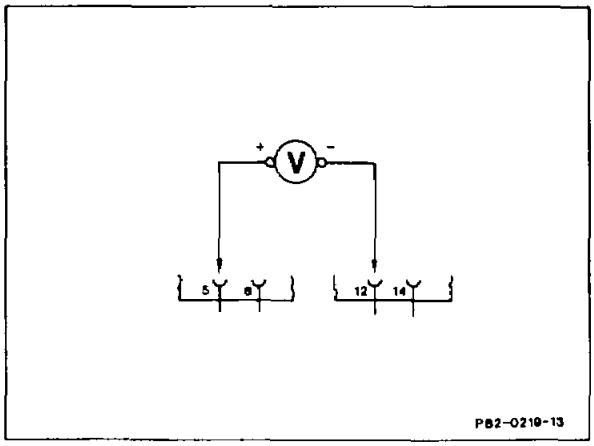

Yes	No

Test brown/blue cable from contact 12 up to the radio security contact for open circuit or short circuit to ground; rectify any open circuit or short circuit.

Note
It is important to ensure that the radio security contact is correctly installed, has good contact to the radio housing and that no sticker is affixed in the contacting area on the radio housing.

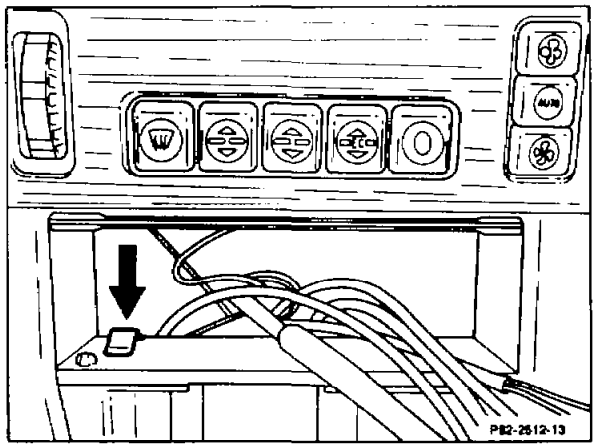

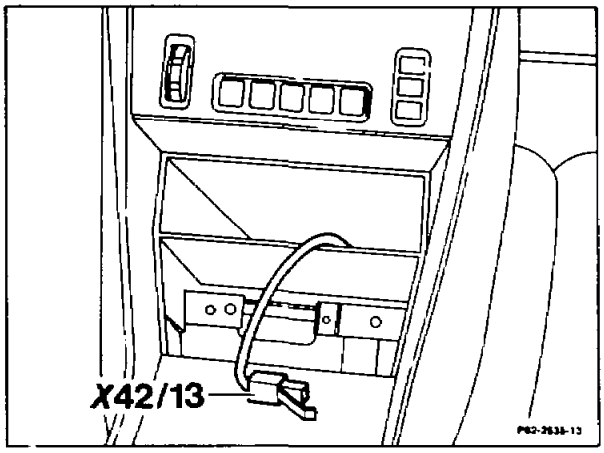

Test step 3.5

Test tripping contact of ignition starter switch (ignition on).

Multimeter to contact 14 (+), contact 2 (–) of 14-pin connector. Turn key in steering lock to position 2.

Specification >11 V

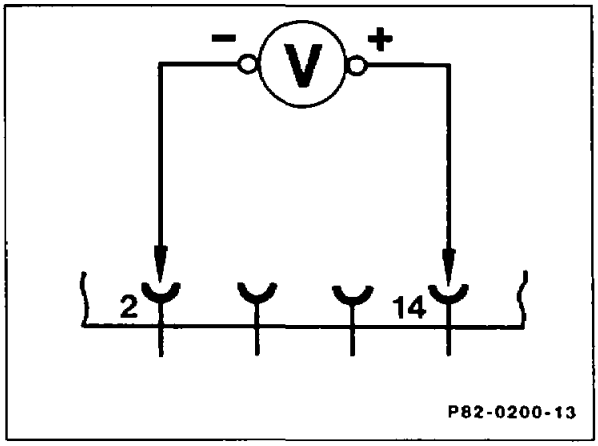

Yes	No

Test black/red cable from contact 14 up to plug connection X30 contact 2 for open circuit; rectify any open circuit.

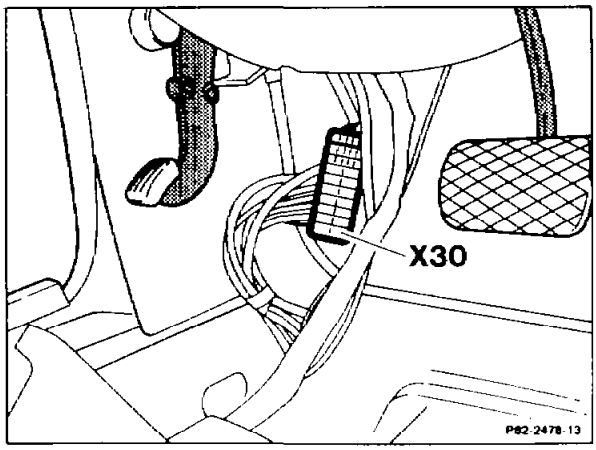

Test step 3.6

Test tripping contact of service brake (stop lamp switch).

Multimeter to contact (+), contact 2 (–) of 14-pin connector. Key in position 2. Operate service brake.

Specification >11 V

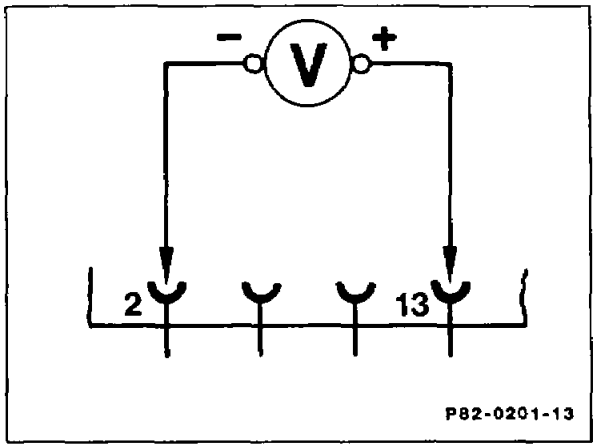

Yes	No

Test black/red white cable from contact 13 up to stop lamp switch S9 for open circuit; rectify any open circuit.

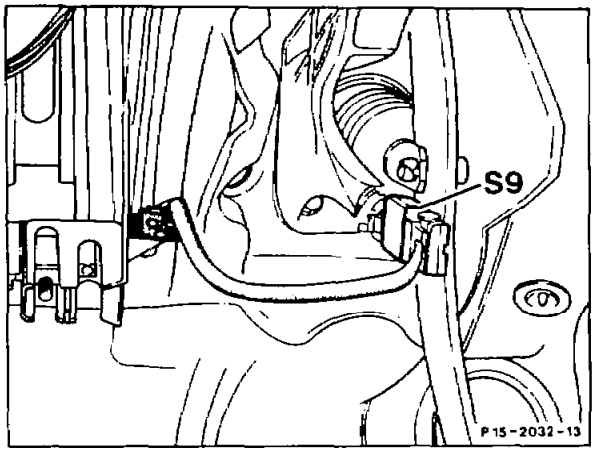

Test step 3.7

Test towing sensor triggering contact*

Multimeter to contact 5 (+) of 8-pin connector, contact 11 (–) of 14-pin connector. Bridge contacts 1 and 2 with connection cable. Jack up vehicle 50 mm.

Specification 0 V

* Not applicable as of 03/87

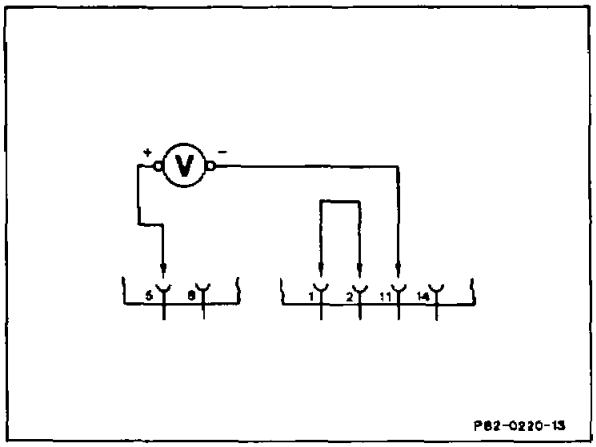

Yes	No

Replace towing sensor triggering contact.

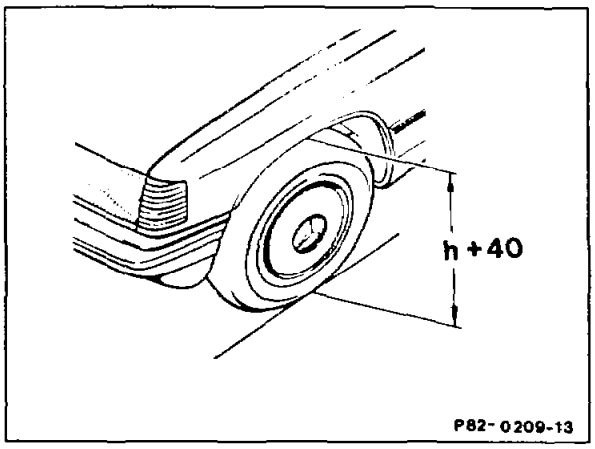

Jack up vehicle further to max. 100 mm.

Specification: one pulse >3 V

Yes	No

Test brown/white cable from contact 12, green/blue cable from contact 11 and red/white cable of plug connection X30 socket 1 to the towing sensor triggering unit N27 for open circuit, remove if necessary.

Bounce springs at rear left of car.

Specification 0 V

Yes	No

Replace towing sensor triggering unit N27.

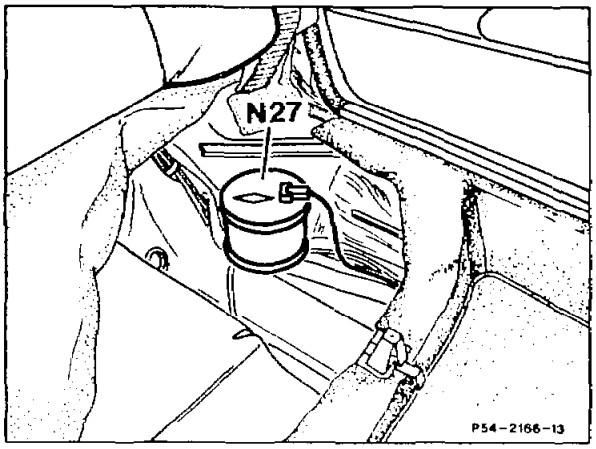

Test step 4

Test audible alarm signal and wiring at 8-pin connector of ATA control unit N26.

Multimeter to contact 1 and to ground

Specification $< 0.5\ \Omega$

Yes	No

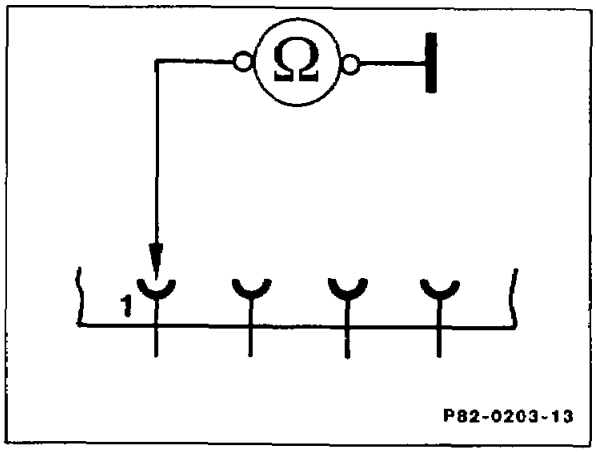

Test black/yellow red cable from contact 1 up to alarm signal horn H3 for open circuit; rectify any open circuit.

Test operation of alarm signal horn (H3) and negative cable for alarm horn for open circuit; rectify any open circuit.

Note
As of model year 1990, the installation position of the alarm horn has been modified. It is located at the front left behind the head lamp.

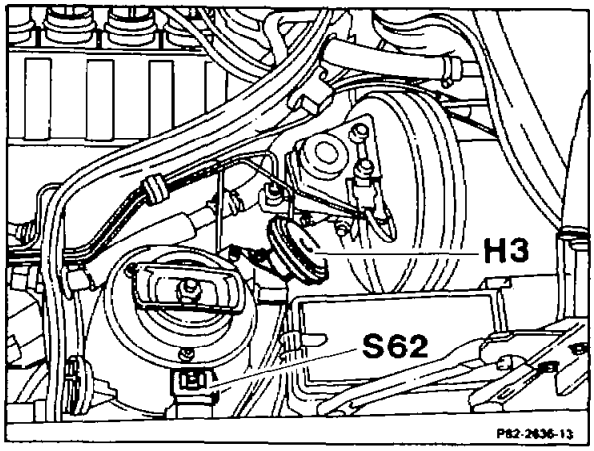

If no fault is found at the switches, the wiring and at the triggering contacts, the ATA control unit N26 has to be replaced.

B. USA as of model year 1986

For wiring diagrams see Wiring Diagrams Passenger Cars Volume 3.1 and 4.

Special tool

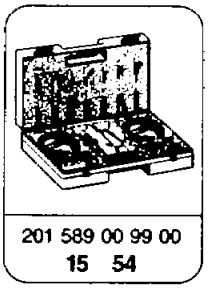

201 589 00 99 00
15 54

Commercially available testers

Multimeter	e.g.	Sun DMM-5

Note
The electrical connection set 201 589 00 99 00 must be enlarged by two cables, order no. 809509.

Test steps

1. Test voltage supply for control unit.
2. Test switching anti-theft warning system on and off.
3. Test tripping contacts and wiring.
4. Test audible alarm signal and wiring.
5. Test visual alarm signal and wiring.

Preparation for all test steps.

1 Test fuse C and fuses of auxiliary fuse box.

2 Unplug 8-pin and 14-pin connectors from the ATA control unit N26.

3 Check contacts of couplings to ensure the soldered connections and electrical contacts are good. Check the contacts with a gauge; they must not be widened.

Note
The connector of cable no. 809509 from the *electrical connection set* 201 589 00 99 00 can be used as a gauge.

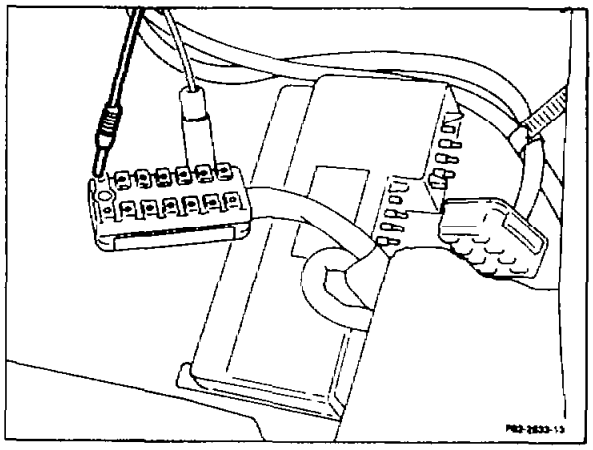

Test step 1

Test voltage supply for control unit N26 at the 14-pin coupling.

Multimeter to contact
- 2
+ 3

Specification >11 V

Yes	No

Test red/white cable from contact 3 up to fuse C and brown cable from contact 2 up to plug connection X30 contact 3 (terminal 3) for open circuit; rectify any open circuit.

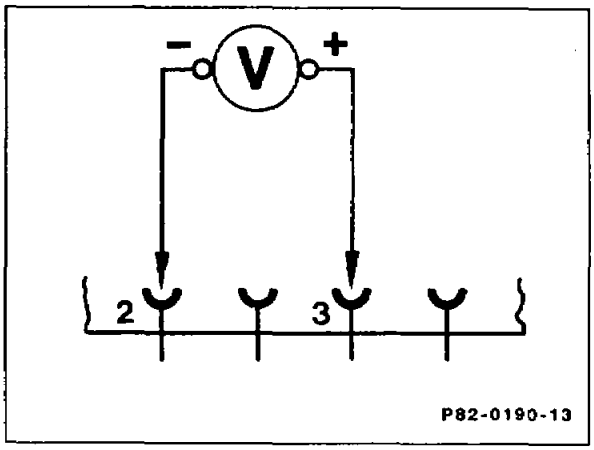

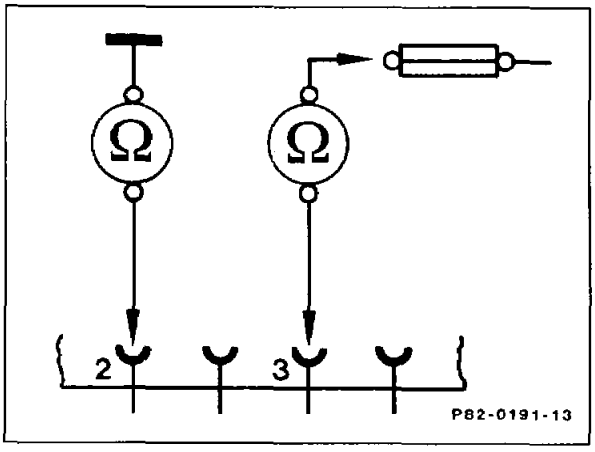

Test step 1.1

Test voltage supply for the ATA control unit N26 at 8-pin.

Multimeter in turn to contacts

+ 4
+ 5
– 2 of 14-pin coupling

Specification >11 volts

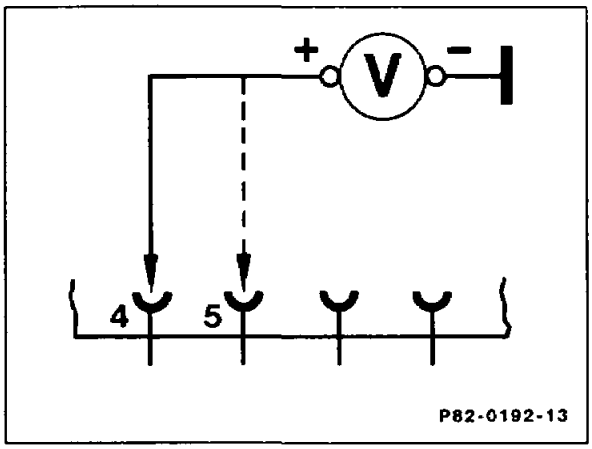

Yes	No

Test red/white cable from contact 4 and red/yellow cable from contact 5 up to additional fuse for open circuit; rectify any open circuit.

Test step 2

Test ATA switching on and off. Test switch at lock cylinders of front left and right doors for proper operation and wiring from the switches to the 8-pin connector of the ATA control unit N26 for open circuit.

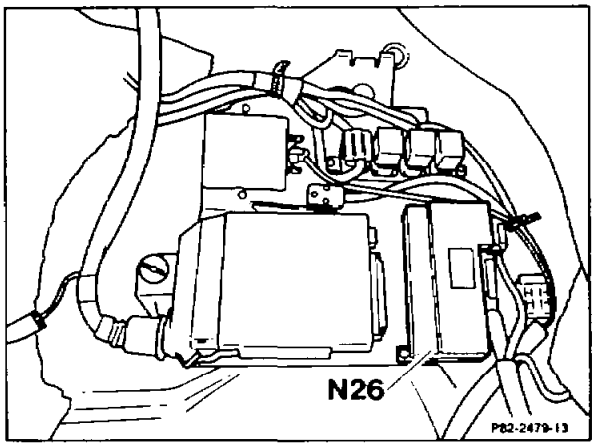

1. Switching on anti-theft warning system

Multimeter to contact 6 and to ground. Turn key in left-hand door to the right and in right-hand door to the left and hold tight.

Specification <0.5 Ω

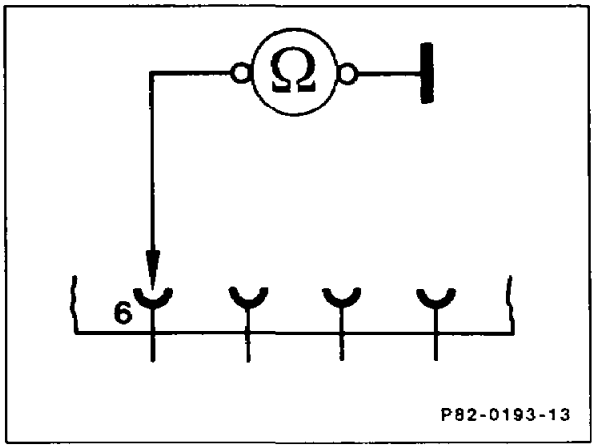

2. Switching off anti-theft warning system

Multimeter to contact 7 and to ground. Turn key in left-hand door to the left and in right-hand door to the right and hold tight.

Specification <0.5 Ω

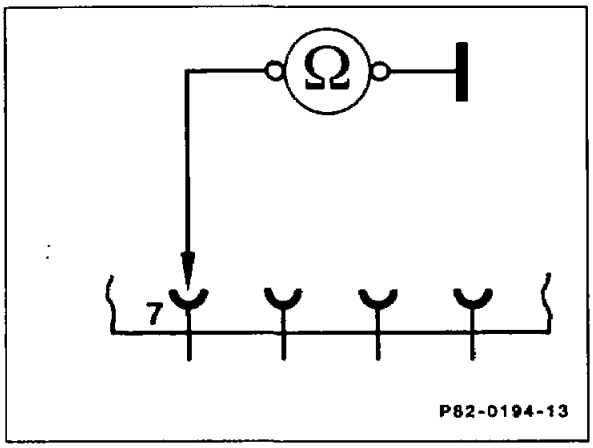

Remove plug connection (S62/1) of the left-hand or right-hand door respectively.

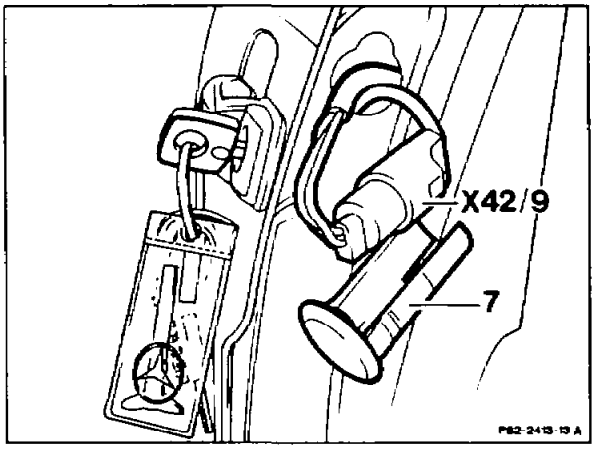

Test step 2.1

Check operation of switch at locked cylinders of front left and front right doors.

Note

Before switching on anti-theft warning system when door is open, the rotary tumbler of the front left door lock (arrow) must be moved into "door closed" position. Before closing the front left door, the rotary tumbler on the inside door mechanism must be moved into the "door open" position.

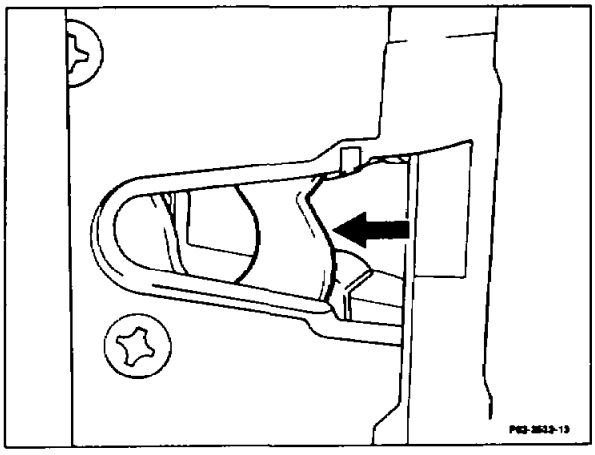

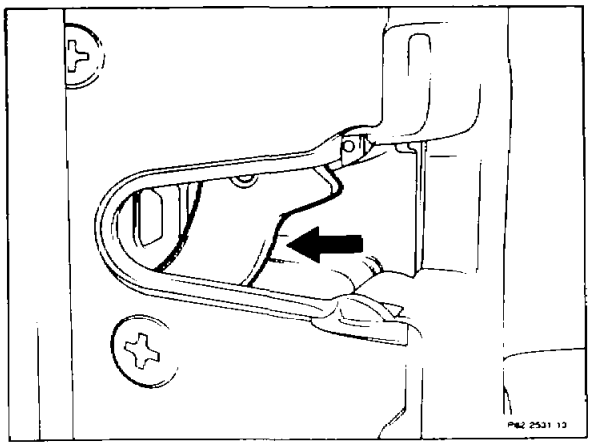

1. Anti-theft warning system switch on

Multimeter to connectors 1 and 3

Turn key in left-hand door to the right and on right-hand door to the left and hold tight.

Specification < 0.5 Ω

2. Anti-theft warning system switch off

Multimeter to connectors 1 and 2

Turn key in left-hand door to the left and on right-hand door to the right and hold tight.

Specification < 0.5 Ω

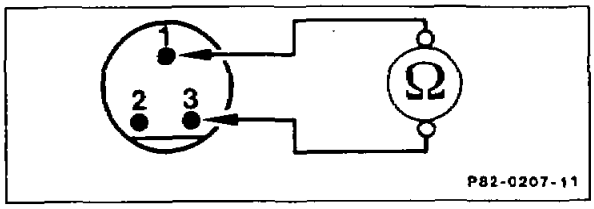

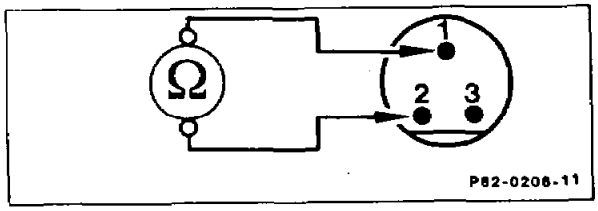

Yes	No

Replace locked cylinders of left-hand or right-hand door, respectively.

Test brown cable from contact 1, green/yellow cable from contact 2 and yellow/blue cable from contact 3 for open circuit. The cables run via the plug connections X37/1 or X37/2 and X42 to the 8-pin connector of the ATA control unit N26 (see wiring diagram). If no open circuit is found, replace ATA control unit N26.

Note
Plug connections X37/1, X37/2 and X42/9, X42/10 no longer fitted as of 05/88.

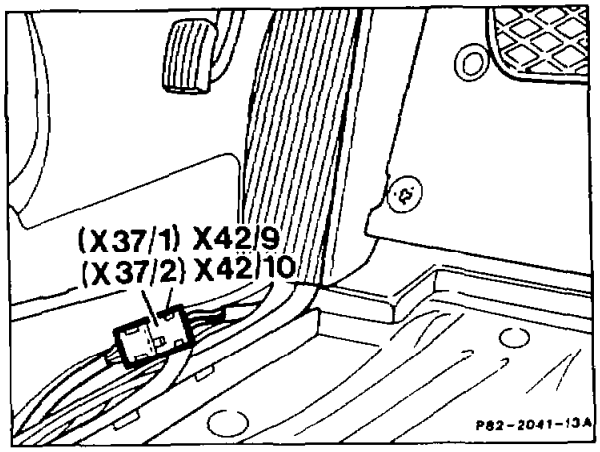

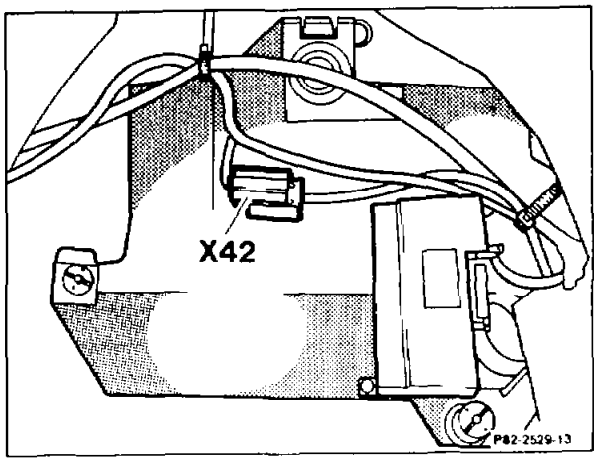

Test step 2.2

Test switching on and off anti-theft warning system at trunk lid lock. It is assumed that the car can be locked and unlocked centrally from the trunk lid lock.

Test wiring between connector of plug connection X43 and 14-pin connector of ATA control unit N26 for open circuit.

Multimeter to connector and contact

1	4
2	6
3	5

Specification < 0.5 Ω

Yes	No

Rectify open circuit

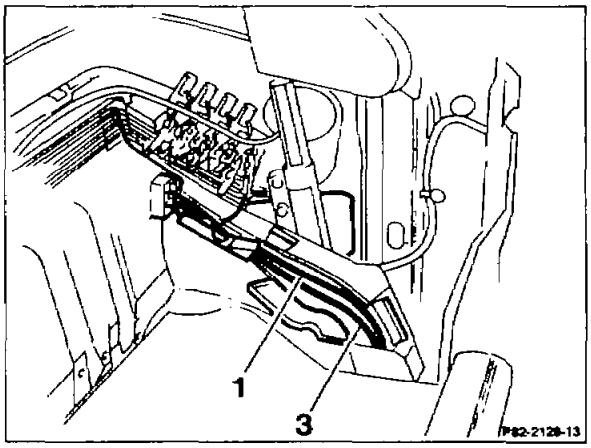

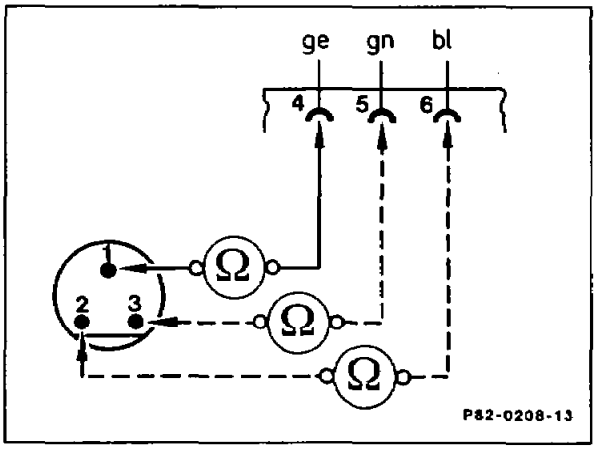

Test step 3

Test triggering contacts and wiring at 14-pin connector of ATA control unit N26.

Note
If the anti-theft warning system is switched on (car parked and locked). The alarm is tripped after a cut-in delay of about 10 seconds by the following tripping points:

3. If the front left or front right door is opened.
3.1 If the rear left or rear right door is opened.
3.2 If the hood is opened.
3.3 If the trunk lid is opened.
3.4 If the radio is removed.
3.5 If the key is turned in the steering lock to position 2 (ignition on)
3.6 If the service brake is operated.
3.7 If the car is towed away.*

Test tripping contacts (door contact switches) of the front left and front right doors.

Multimeter to contact 3 (+), contact 7 (–)
Door opened specification > 11 V
Door closed specification 0 V

* Not applicable as of 07/86

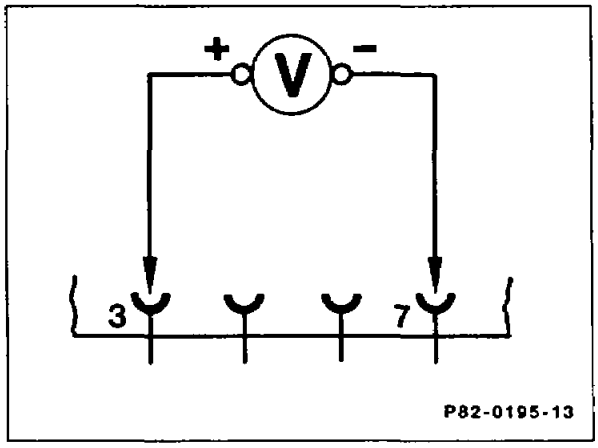

Yes	No

Test brown/gray cable from contact 7 up to left or right door contact switch, respectively, for open circuit or for short to ground; rectify any open circuit or short circuit.

Note
The cables run via the plug connection X42 (see wiring diagram Fig. 1).

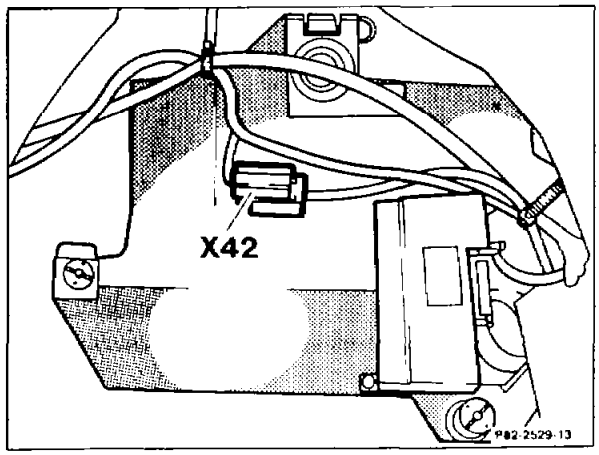

Test step 3.1

Test tripping contacts (door contact switches) of the rear left and rear right doors.

Multimeter to contact 3 (+), contact 8 (–)
Door opened specification > 11 V
Door closed specification 0 V

Yes	No

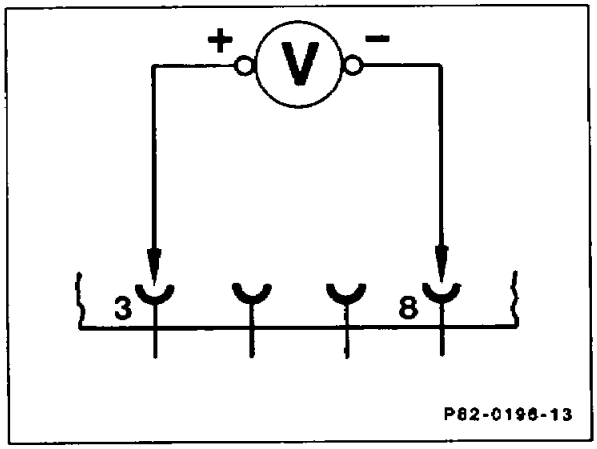

Test brown/green black cable from contact 8 up to the left or right door contact switch, respectively, for open circuit or short to ground; rectify any open circuit or short circuit.

Note
The cable runs via plug connection X42 (see wiring diagram Fig. 1).

Test step 3.2

Test hood switch (S62).

Note
The hood switch must be pressed approx. 10 mm when the hood is closed.

As a check, wrap a wire around the pin of the switch and attach it so that it can be pushed upward when the pin is pressed in.

Close hood and open it again and measure the distance by which the wire has been pushed up.

Multimeter to contact 3 (+), contact 9 (–)
Hood opened specification > 11 V
Hood closed specification 0 V

Yes	No

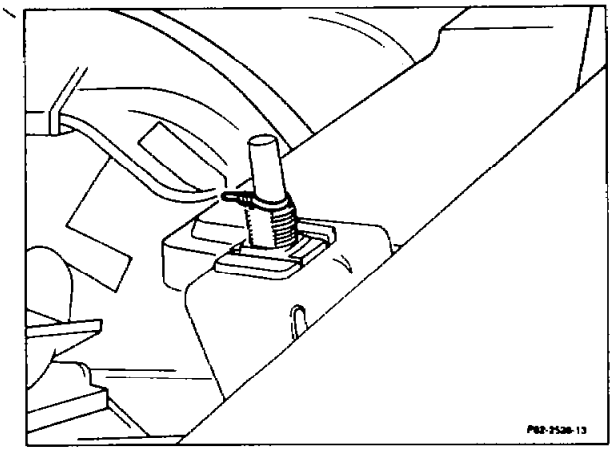

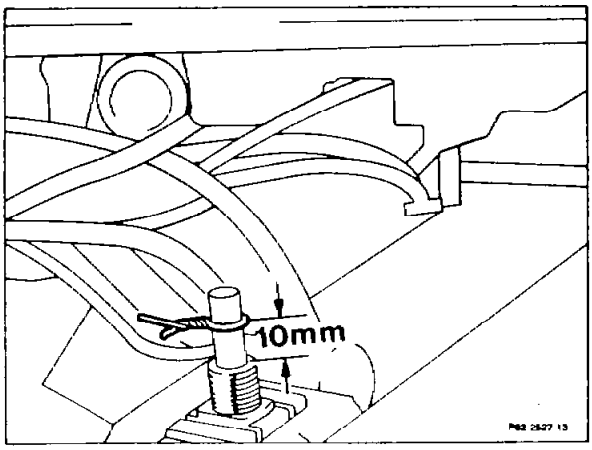

Test brown/red cable from contact 9 up to switch and the switch itself for open circuit or short circuit to ground; rectify any open circuit or short circuit.

Note
The cable runs via the plug connections X42 and X24 (see wiring diagram).

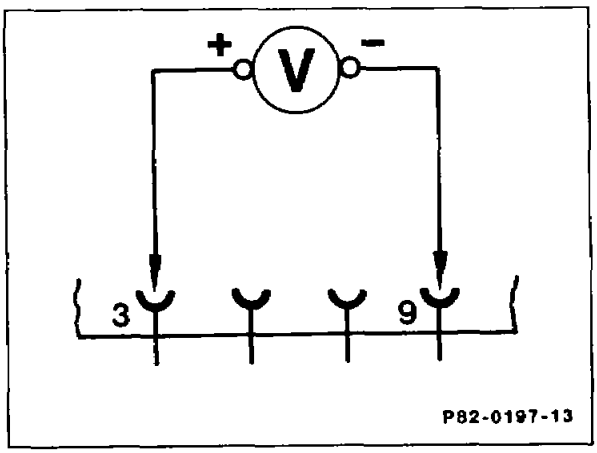

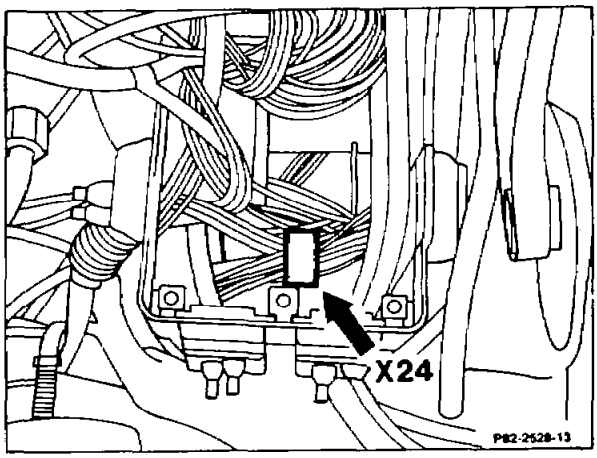

Test step 3.3

Test trunk lid switch triggering contact.

Multimeter to contact 3 (+), contact 10 (–)

Trunk lid opened	specification	>11 V
Trunk lid closed	specification	0 V

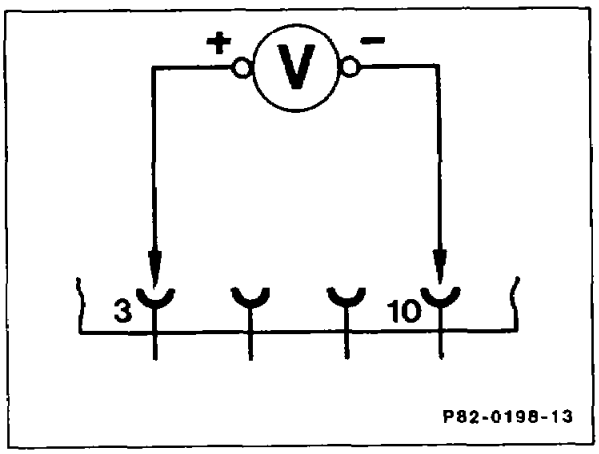

Yes	No

Test black cable from contact up to plug connection (X40/1) and brown/yellow cable from the plug connection (X40/1) up to the switch (S17/8) for open circuit or short circuit to ground; rectify any open circuit or short circuit.

Test step 3.4

Test tripping contact of radio (radio security contact).

Multimeter to contact 3 (+), contact 12 (–)
Radio fitted specification >11 V
Radio removed specification 0 V

Yes	No

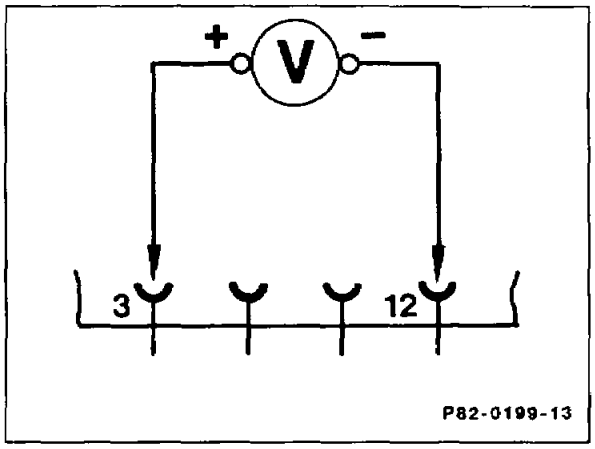

Test brown/blue cable from contact 12 up to radio security contact (arrow) for open circuit or short circuit to ground; rectify any open circuit or short circuit.

Note
It is important to ensure that the radio security contact is correctly installed, that it has good contact to the radio housing and that no sticker is affixed in the contacting area of the radio housing.

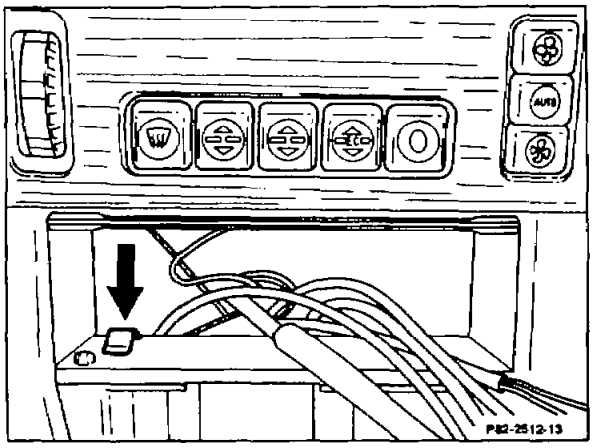

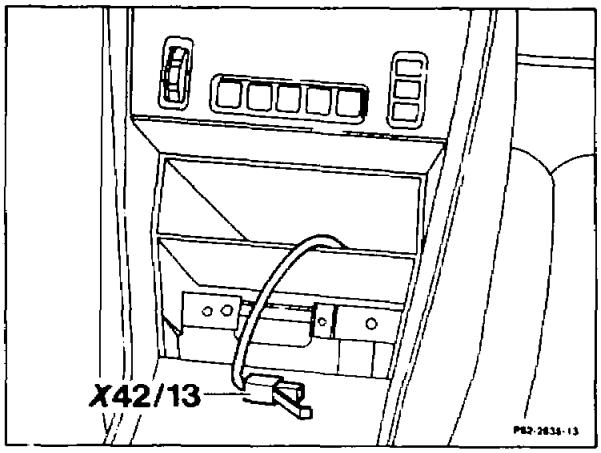

Test step 3.5

Test tripping contact of ignition starter switch (ignition on).

Multimeter to contact 14 (+), contact 2 (–).
Turn key in steering lock to position 2.

Specification >11 V

Yes	No

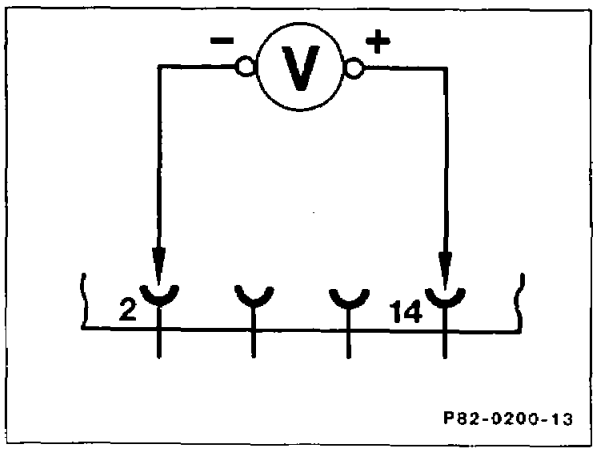

Test black/red cable from contact 14 up to plug connection X30 contact 2 for open circuit; rectify any open circuit.

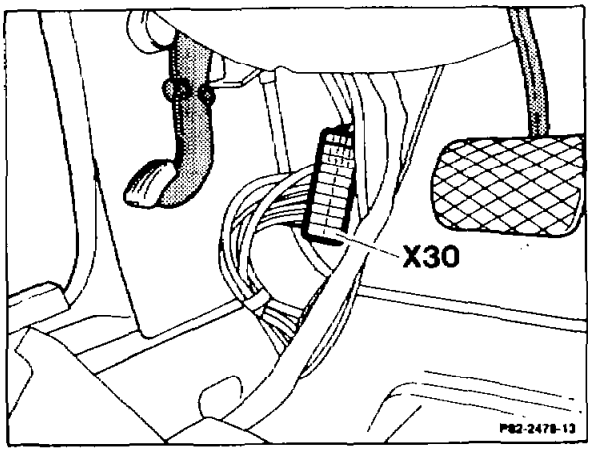

Test step 3.6

Test tripping contact of service brake (stop lamp switch).

Multimeter to contact 13 (+), contact 2 (–). Turn key in steering lock to position 2. Operate service brake.

Specification >11 V

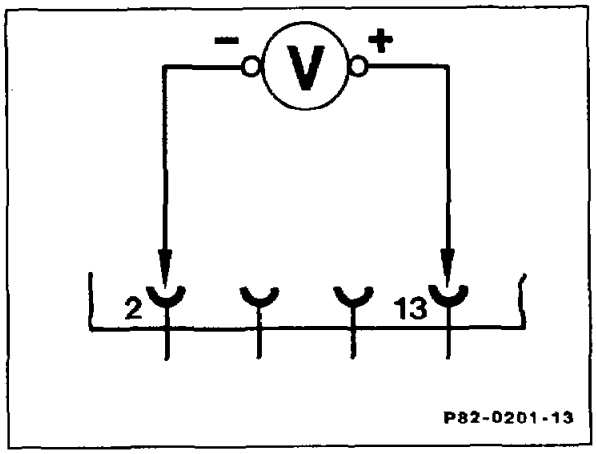

Yes	No

Test black/red/white cable from contact 13 up to terminal block X21 for open circuit; rectify any open circuit.

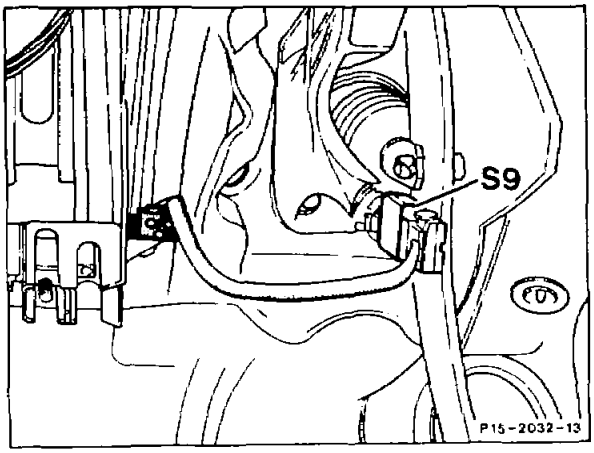

Test step 3.7

Test towing sensor triggering contact*

Multimeter to contact 3 (+), contact 11 (–). Bridge contacts 1 and 2 with connection cable. Jack up vehicle 50 mm.

Specification 0 V

* Not applicable as of 07/86

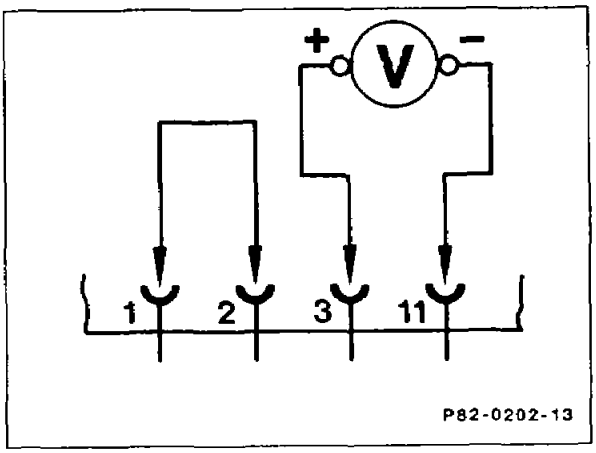

Yes	No

Replace towing sensor triggering contact.

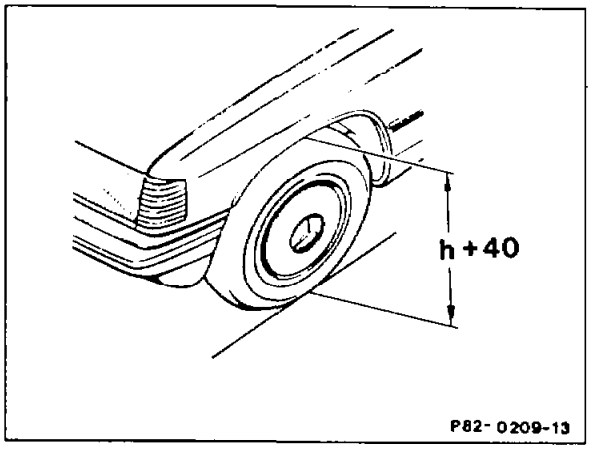

Jack up vehicle further to max. 100 mm.

Specification: one pulse >3 V

Yes	No

Test brown/white cable from contact 1, green/blue cable from contact 11 and red/white cable of the plug connection X30 contact 1 up to the sensor for open circuit; rectify any open circuit.

Bounce springs at rear left of car

Specification 0 V

Yes	No

Replace towing sensor triggering unit N27.

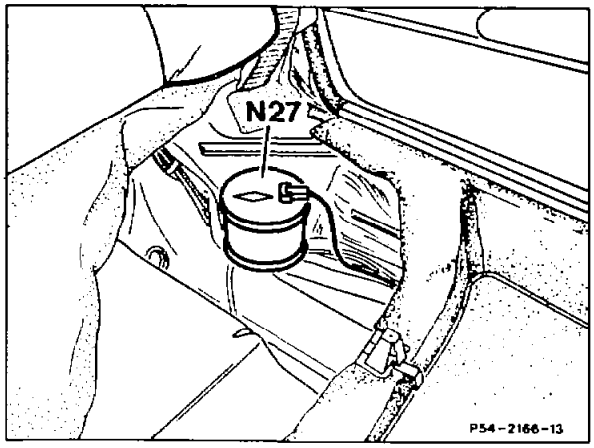

Test step 4

Test audible alarm signal and wiring at 8-pin connector of ATA control unit N26.
Multimeter to contact 1 and ground
Specification < 0.5 Ω

Yes	No

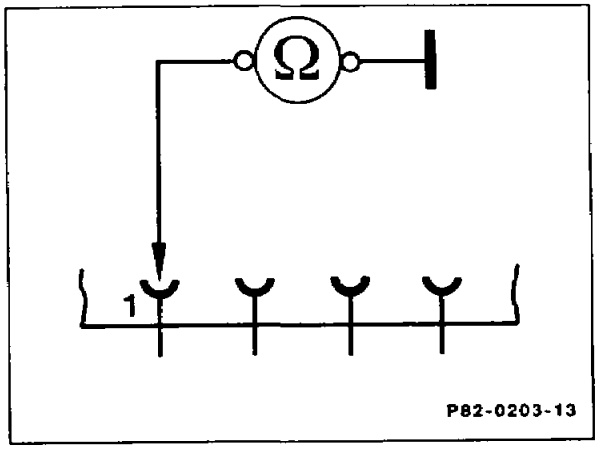

Test black/yellow/red cable from contact 1 up to alarm signal horn H3 for open circuit; rectify any open circuit.

Note
Cable runs via plug connection X24 (see wiring diagram).

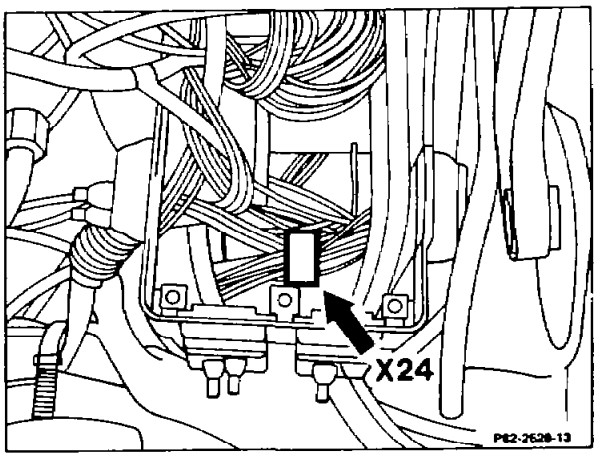

Test operation of alarm signal horn (H3) and negative cable for alarm horn for open circuit; rectify any open circuit.

As of model year 1990, the installation position of the alarm signal horn has been modified. It is located at the front left behind the headlamp.

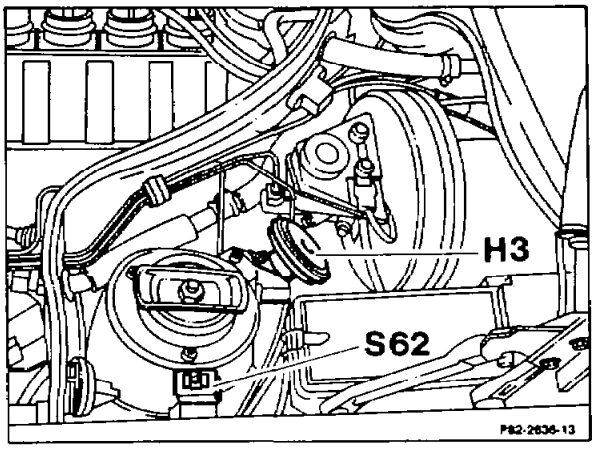

Test step 5

Test visual alarm signal and wiring at 8-pin connector of ATA control unit N26.

Voltmeter to contact 2 (+) and to ground, contact 3 (+) and to ground.

Switch on parking lights.

Specification > 11 V

Yes	No

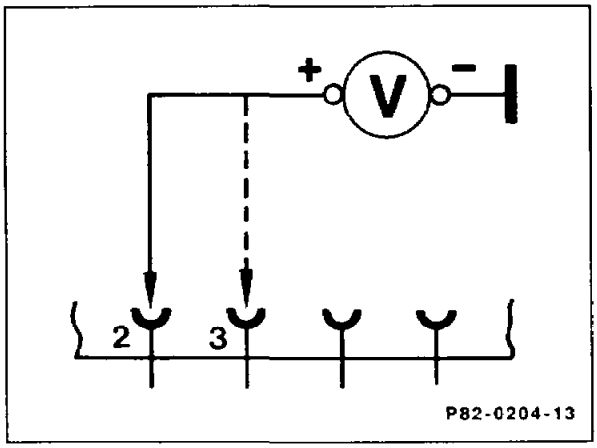

Test gray cable from contact 2 (terminal 58R) and gray/white cable from contact 3 (terminal 58L) up to fuse 3 and fuse 8, respectively, for open circuit; rectify any open circuit.

Test step 5.1

Voltmeter at contact 8 (+) and to ground. Switch on low beam.

Specification >11 V

Yes	No

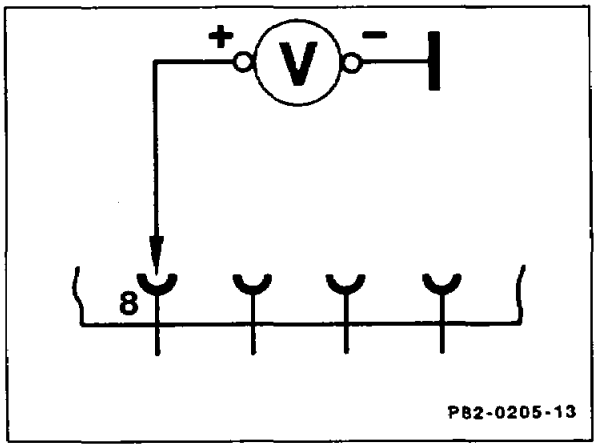

Test yellow cable from contact 8 (terminal 56b) up to fuse 14 (input) for open circuit; rectify any open circuit.

If no fault is found at the switches, the wiring and at the triggering contacts, the ATA control unit N26 has to be replaced.

82–0995 Troubleshooting table convenience control power windows/tilting/sliding roof (ECE)

Operation no. of operation texts and work units or standard texts and flat rates:

Complaint	Possible cause	Remedy
Tilting/sliding roof or power windows do not operate when ignition key in position 1 (no voltage at fuse A or G and H)	Open circuit in wiring, convenience circuit relay faulty.	Test steps 1, 2, 9 Replace relay.
Tilting/sliding roof or power windows do not operate when driver's, front passenger's door open (no voltage at fuse A or G and H)	Open circuit in wiring, door contact switch faulty, convenience circuit relay faulty, convenience control relay faulty	Test step 1, 3, 9 Replace relay or door contact switch.
Tilting/sliding roof does not operate with sliding roof switch (voltage exists at fuse A)	Open circuit in wiring, tilting/sliding roof switch faulty, tilting/sliding roof motor faulty, tilting/sliding roof motor relay unit faulty.	Test step 4, 5 Replace switch, motor, relay unit.
Closing/lowering tilting/sliding roof does not operate	Open circuit in wiring, tilting/sliding roof switch faulty, tilting/sliding roof motor faulty, tilting/sliding roof motor relay unit faulty.	Test step 6 Replace switch, motor, relay unit.
Opening tilting/sliding roof does not operate	Open circuit in wiring, tilting/sliding roof switch faulty, tilting/sliding roof motor faulty, tilting/sliding roof motor relay unit faulty.	Test step 7 Replace switch, motor, relay unit.
Opening tilting roof does not operate	Open circuit in wiring, tilting/sliding roof switch faulty, tilting/sliding roof motor faulty, tilting/sliding roof motor relay unit faulty.	Test step 8 Replace switch, motor, relay unit.

Complaint	Possible cause	Remedy
Power windows to not operate with power window switch (voltage exists at fuse G, H)	Open circuit in wiring, power window switch faulty, power window motor faulty, convenience control unit faulty.	Test steps 9, 10, 14 Replace switch, motor, control unit.
Closed power window (front right) with power window switch does not operate	Open circuit in wiring, power window switch faulty, power window motor faulty, convenience control unit faulty.	Test steps 13, 14 Replace switch, motor, control unit.
Open power window (front right) with power window switch does not operate	Open circuit in wiring, power window switch faulty, power window motor faulty, convenience control unit faulty.	Test steps 11, 14 Replace switch, motor, control unit.
Open power window (front right) (retract control) with power window switch does not operate	Open circuit in wiring, power window switch faulty, power window motor faulty, convenience control unit faulty.	Test steps 11, 12, 14 Replace switch, motor, control unit.
Convenience control power windows/tilting/sliding roof with ignition key at driver's door, front passenger's door, trunk lid does not operate	Open circuit in wiring, 12 V at terminal 15R, or ground at door contact switch, when car parked. Lock switch of driver's door, front passenger's door, trunk lid faulty, convenience control unit faulty.	Test steps 16, 17, 18 Replace lock switch, control unit.
Increased amperage (20–40 A) briefly ($t \leq 25$ seconds) when car locked	Short circuit in wiring to terminal 31, lock switch of driver's door, front passenger's door, trunk lid faulty. Convenience control unit faulty.	Test step 15 Replace lock switch, control unit.

Test step	Test scope	Test connection	Operation/ Requirement	Specifi-cation	Possible cause/Remedy
1	Wiring to relay K24	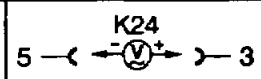	Unplug coupling from convenience circuit relay (K24)	11–14 V	Open circuit in wiring from K24 → X4/1 from K24 → W1
2	Wiring to relay K24	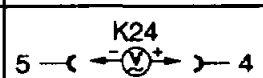	Unplug coupling from convenience circuit relay (K24). Ignition: **On**	11–14 V	Fuse (F1/2) faulty Open circuit in wiring from K24 → F1/2 **Specification reached:** relay (K24) faulty
3	Wiring to relay K24	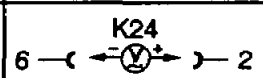	Unplug coupling from convenience circuit relay (K24). Open driver or front passenger door	11–14 V	Fuse (F1/9) faulty Open circuit in wiring from K24 → F1/9, from K24 → N57 contact E4 from N57 contact E1 → S17/3 Door contact switch (S17/3) faulty, control unit (N57) faulty. **Specification reached:** relay (K24) faulty.
4	Wiring to tilting/sliding roof motor (M12m1)	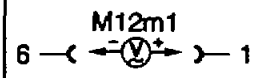	Unplug coupling from tilting/sliding roof motor (M12m1). Ignition: **On**	11–14 V	Open circuit in wiring M12m1 contact 1 → fuse (F1/A) from M12m1 contact 6 → ground (W6) **Specification reached:** Motor (M12m1) faulty. Relay (M12k1) faulty. Switch (S13/2) faulty.
5	Wiring to tilting/sliding roof switch (S13/2)	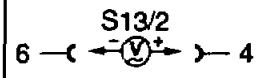	Unplug coupling from tilting/sliding roof switch (S13/2). Ignition: **On**	11–14 V	Open circuit in wiring from S13/2 → W4, from S13/2 → M12m1 Contact 1 **Specification reached:** Switch (S13/2) faulty.
6	Wiring from tilting/sliding roof switch (S13/2) to sliding/tilting roof motor (M12m1)	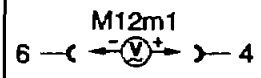	Unplug coupling from tilting/sliding roof motor (M12m1). Ignition: **On** Operate tilting/sliding roof switch in closed/lower direction	11–14 V	Open circuit in wiring from M12m1 contact 4 → S13/2 contact 3 Switch (S13/2) faulty. **Specification reached:** Motor (M12m1) faulty. Motor relay unit (M12k1) faulty.

Test step	Test scope	Test connection	Operation/ Requirement	Specifi-cation	Possible cause/Remedy
7	Wiring from tilting/sliding roof switch (S13/2) to tilting/sliding roof motor (M12m1)	M12m1 6 — 3	Unplug coupling from tilting/sliding roof motor (M12m1) Ignition: **On** Operate tilting/sliding roof switch in open direction.	11–14 V	Open circuit in wiring from M12m1 contact 3 → S13/2 contact 1. Switch (S13/2) faulty. **Specification reached:** Motor (M12m1) faulty. Motor relay unit (M12k1) faulty.
8	Wiring from tilting/sliding roof switch (S13/2) to tilting/sliding roof motor (M12m1)	M12m1 6 — 5	Unplug coupling from tilting/sliding roof motor (M12m1) Ignition: **On** Operate tilting/sliding roof switch in raised direction.	11–14 V	Open circuit in wiring from M12m1 contact 5 → S13/2 contact 2. Switch (S13/2) faulty. **Specification reached:** Motor (M12m1) faulty. Motor relay unit (M12k1) faulty.
9	Supply voltage of convenience control unit (N57)	N57 C4 — E2	Unplug coupling C and E from convenience control unit (N57)	11–14 V	Open circuit in wiring from N57 contact C4 → W6, from N57 contact E2 → X30 contact 1, from X30 contact 1 → fuse (F1/C) **Specification reached:** Control unit (N57) faulty
10	Supply voltage of convenience control unit (N57)	N57 A2—A10	Unplug coupling A from convenience control unit (N57) Ignition: **On**	11–14 V	Open circuit in wiring from N57 contact A2 → W12, from N57 contact A10 → F1/G

Test step	Test scope	Test connection	Operation/ Requirement	Specification	Possible cause/Remedy
11	Power window switch	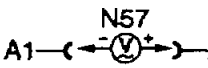	Unplug coupling A from convenience control unit (N57) Ignition: **On**	0–1 V	Cable from N57 contact A1 → S19s1 contact 4 has short circuit to terminal 31. Switch (S19s1) faulty
		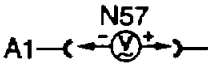	Press power window switch in open direction (1st and 2nd detent).	11–14 V	Open circuit in wiring from N57 contact A1 → S19s1 contact 4, from S19s1 contact 1 → W12. Switch (S19s1) faulty
12	Power window switch	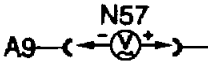	Unplug coupling A from convenience control unit (N57) Ignition: **On**	0–1 V	Cable from N57 contact A9 → S19s1 contact 5 has short circuit to terminal 31. Switch (S19s1) faulty
		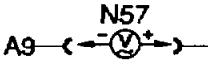	Press power window switch in open direction (1st and 2nd detent).	11–14 V	Open circuit in wiring from N57 contact A9 → S19s1 contact 5, from S19s1 contact 1 → W12. Switch (S19s1) faulty
13	Power window switch	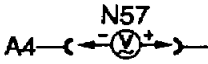	Unplug coupling A from convenience control unit (N57) Ignition: **On**	0–1 V	Cable from N57 contact A4 → S19s1 contact 3 has short circuit to terminal 31. Switch (S19s1) faulty
		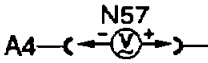	Press power window switch in closed direction.	11–14 V	Open circuit in wiring from N57 contact A4 → S19s1 contact 3, from S19s1 contact 1 → W12. Switch (S19s1) faulty

Test step	Test scope	Test connection	Operation/ Requirement	Specification	Possible cause/Remedy
14	Power window motor	N57 A6—(-Ω+)—A11	Unplug coupling A from convenience control unit (N57).	0.5–2 Ω	Open circuit in wiring N57 → M10/3 Motor (M10/3) faulty
		N57 A2—(-Ω+)—A11		>20 kΩ	Cable from N57 → M10/3 has short circuit to terminal 31 Motor (M10/3) faulty **Specification reached:** Switch (S13/2) or control unit (N57) faulty
15	Lock switch, driver door, front passenger door, trunk lid	N57 ⊥ (-Ω+)— D4	Unplug coupling D from convenience control unit (N57).	>20 kΩ	Cable from N57 → S86/1 from N57 → S87/1 from N57 → S88/2 has short circuit to terminal 31 Lock switch (S86/1, S87/1, S88/2) faulty **Specification reached:** Control unit (N57) faulty
16	Lock switch, driver door, front passenger door, trunk lid		Unplug coupling D from convenience control unit (N57).		
		N57 ⊥ (-Ω+)— D4	Close driver door with ignition key and hold pressed.	0–1 Ω	Open circuit in wiring from N57 → S86/1 Lock switch (S86/1) faulty
		N57 ⊥ (-Ω+)— D4	Close front passenger door with ignition key and hold pressed.	0–1 Ω	Open circuit in wiring from N57 → S87/1 Lock switch (S87/1) faulty
		N57 ⊥ (-Ω+)— D4	Close trunk lid with ignition key and hold pressed (60°)	0–1 Ω	Open circuit in wiring from N57 → S88/2 Lock switch (S88/2) faulty

Test step	Test scope	Test connection	Operation/ Requirement	Specification	Possible cause/Remedy
17	Terminal 15R to control unit	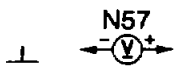	Unplug coupling E from convenience control unit (N57). Ignition: **OFF**	0–1 V	Positive (terminal 30) exists constantly at fuse F1/C
			Ignition: **ON**	11–14 V	Open circuit in wiring from N57 contact E3 → X30 contact 5
18	Door contact switch	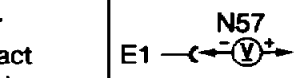	Unplug coupling 9E from convenience control unit (N57). Doors closed.	0–1 V	Cable 9 from N57 contact E1 → S17/3 has short circuit to terminal 31. Door contact switch faulty.

82-8105 Removing and installing antenna

Operation no. of operation texts and work units or standard texts and flat rates: 82-8005, 82-8105

A. Sedan, coupe and convertible

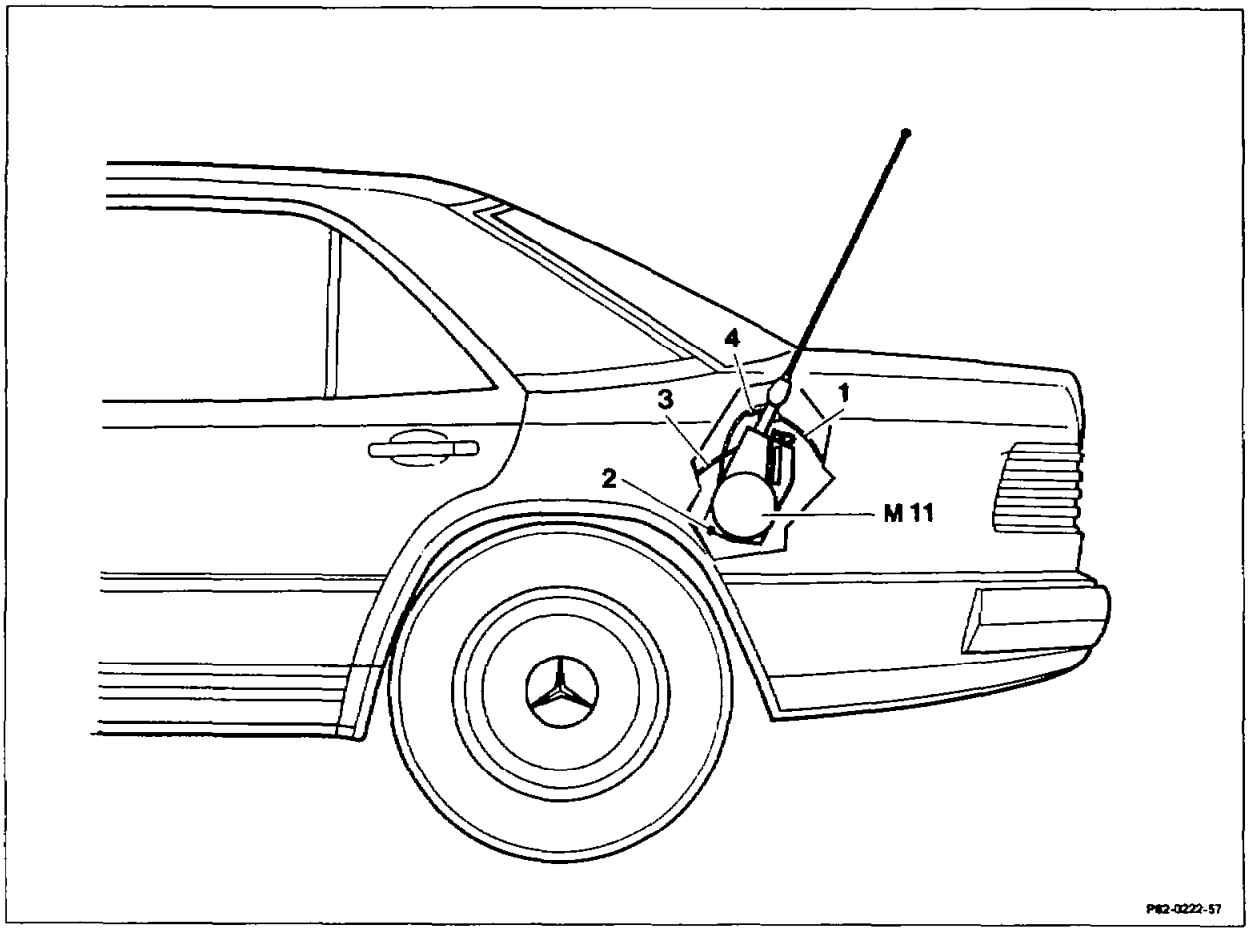

On version with automatic antenna	disconnect battery ground cable, reconnect.
Mat in trunk	remove, install.
Sedan and coupe	
Panelling on left side of trunk	remove, install.
Electrical connection for automatic antenna	disconnect, reconnect.
Ground strap (1)	disconnect, reconnect.
Bracket (2) on inside on wheelhouse	screw off, screw on.
Antenna (M11)	pull downward, install from below.

Antenna lead (4)	disconnect, reconnect.

Note
From the start of production the antenna inclination is approx. 10° for the sedan and approx. 30° for the coupe. The antenna inclination has been changed twice for the sedan. As of 02/87 approx. 20° for mechanical antenna only. As of 09/88 approx. 30°.

Convertible

Dividing wall between fuel tank and trunk	remove, install.
Panelling on left side of trunk	remove, install.
Receiver and amplifier A2/3 (if present)	remove, install.
Ground strap (1)	disconnect, reconnect.
Bracket (2) on inside of wheelhouse	screw off, screw on.
Antenna (M11)	pull downward, install from below.
Electrical connection for automatic antenna	disconnect, reconnect.
Antenna lead (4)	disconnect, reconnect.

Model 124.034/036
As of 04.92 an automatic antenna with improved (capacitive) ground has been installed.

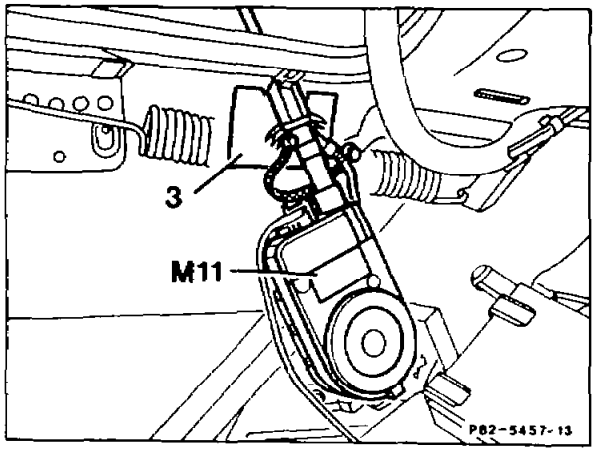

3 Ground contact foil
M11 Automatic antenna

Antenna as of approx. 07/93

The electronic stage was separated from the mechanical stage of the antenna and attached to the mechanical section of the antenna in a separate housing.

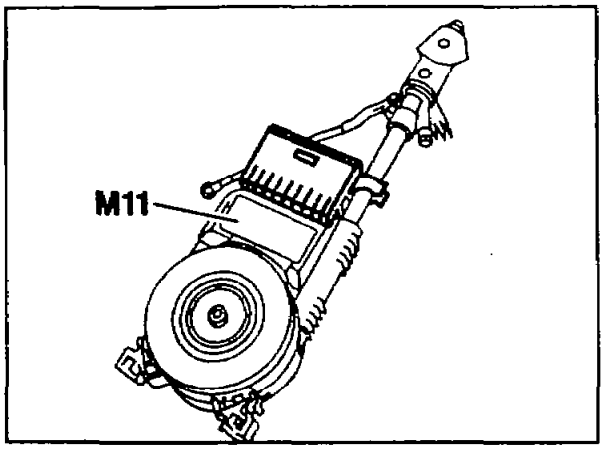

P82-6404-13

Japan version

The telescoping automatic antenna can be extended half-way or completely with a button on the radio.

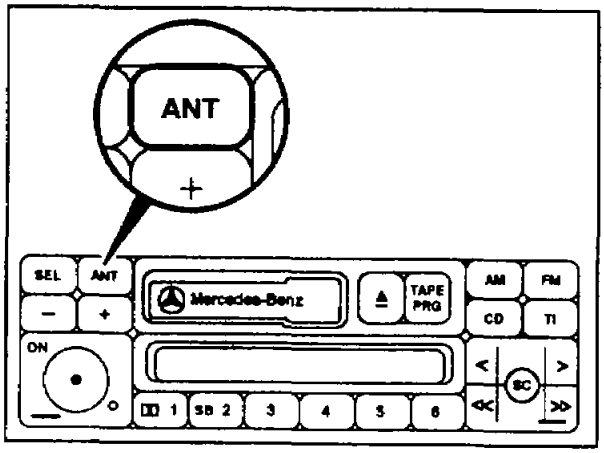

P82-6262-13

Note

As of approx. 07/93 an automatic antenna with improved (capacitive) ground has been installed on all 124 models.

B. Station wagon

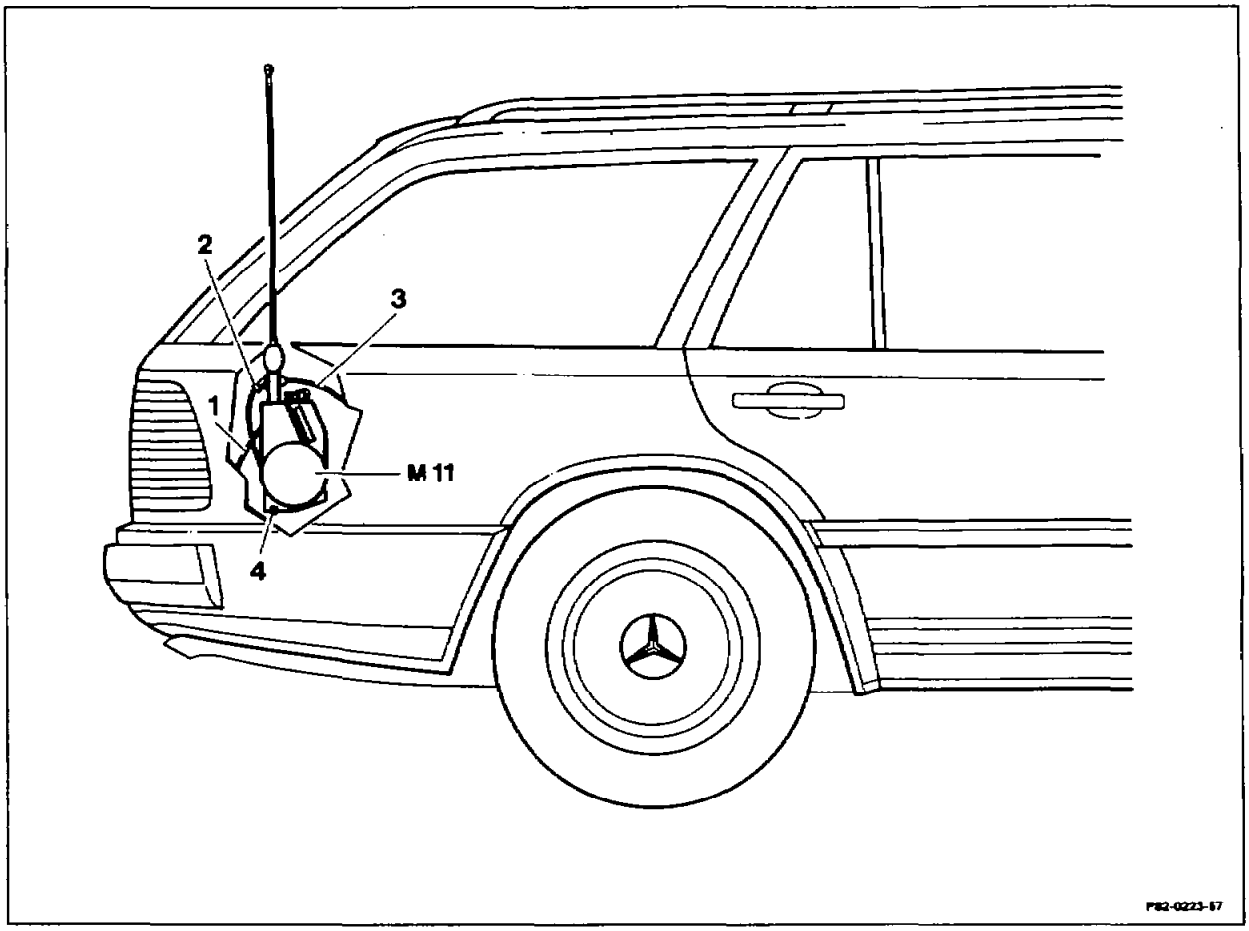

Right side trim panel	open, close.
Automatic antenna version:	
Ground cable at battery	disconnect, connect.
Electrical connection (1) for automatic antenna	unplug, plug in.
Antenna cable (2) and ground strap (3)	disconnect, connect.
Bracket (4)	unscrew, screw on.
Antenna (M11)	pull down, insert from below.

C. (USA) antenna (radio/telephone) as of model year 92

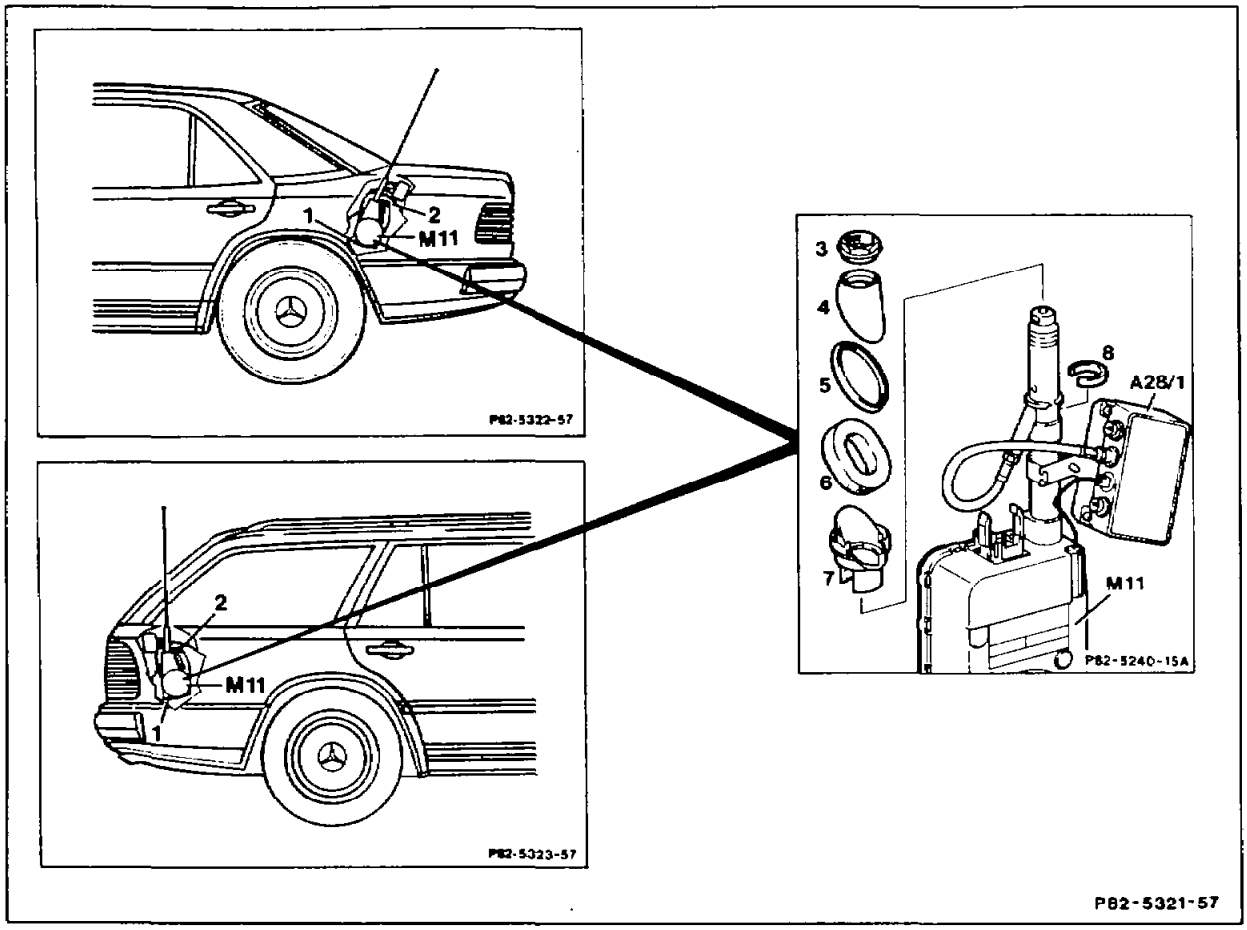

A28/1	Antenna splitter, power antenna	6	Foam rubber
4	Cover	7	Spacer
5	Sealing ring	8	Plastic clip

Sedan/Coupe

Cover in left wheelhouse ..... remove, install.

Station wagon

Right side trim panel ..... open, close.

All vehicles

Ground cable at battery ..... disconnect, connect.

Nut (3) ..... unscrew, screw in.

Bracket (1) ..... unscrew, screw on.

Electrical connection (2) ..... unplug, plug in.

Antenna cable for radio and telephone at antenna splitter A28/1 ..... disconnect, connect.

Antenna M11 ..... remove, insert.

Note

When installing, it is important to ensure that a good earth connection exists between antenna head and fender.

D. Antenna for radio/telephone

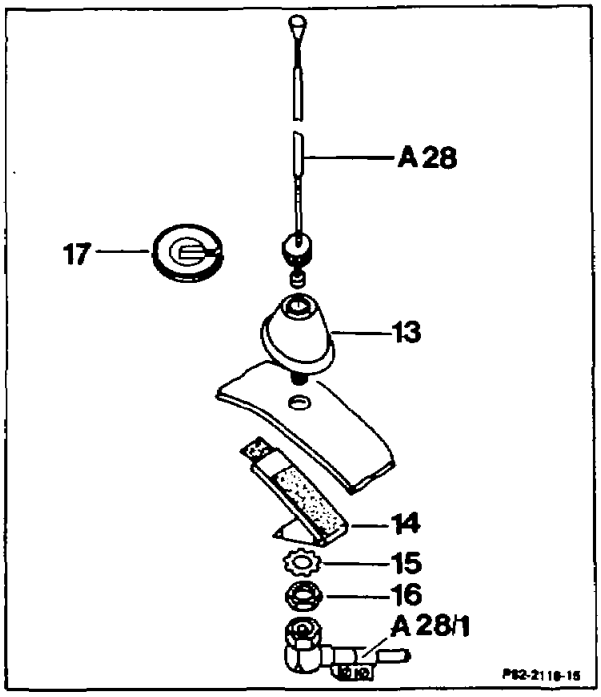

Sedan, coupe
14 Supporting plate
15 Serrated washer

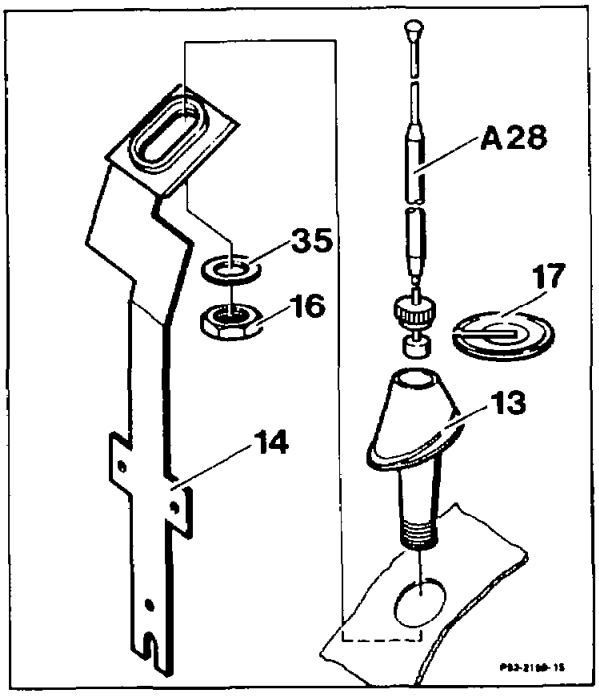

Station wagon
14 Supporting plate
35 Washer

Antenna (A28)	slacken with antenna wrench (17), take off antenna rod, fit on and tighten.
Antenna cable at bottom	unscrew, screw on.
Nut (16)	unscrew, screw on.
Antenna base (13)	remove, insert.

E. Sizes for antenna hole in rear fender

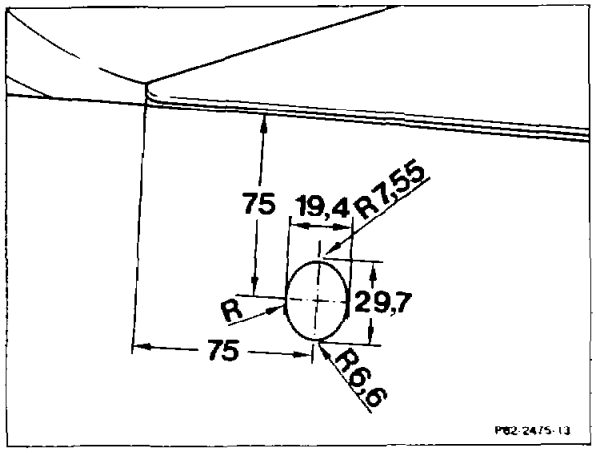

Sedan
Antenna angle 10° or 20°

Sedan

Antenna angle 30°

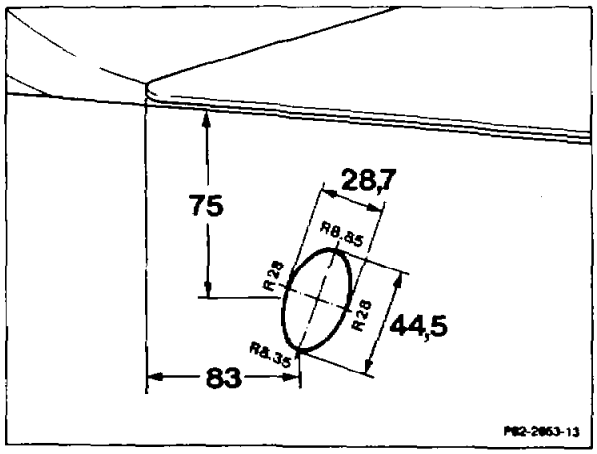

Coupe

Antenna angle 30°

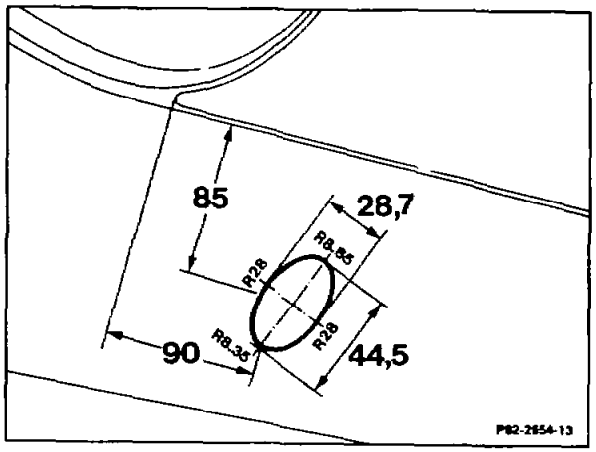

T-model

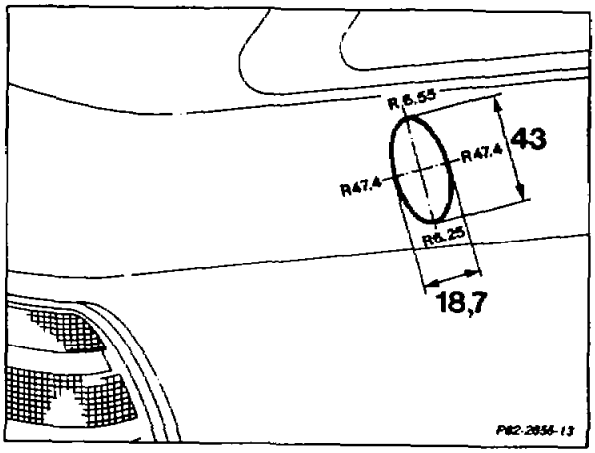

Convertible

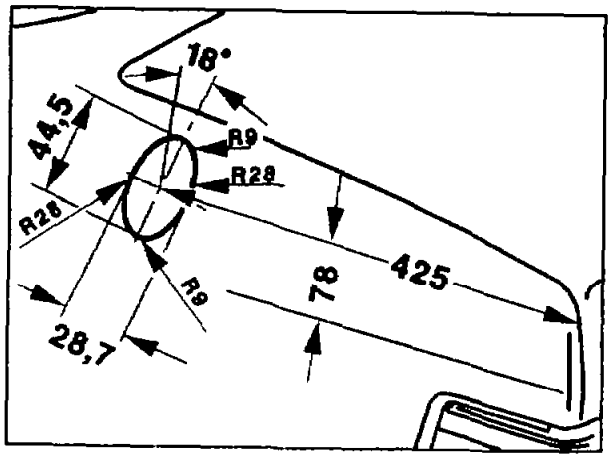

P82-6403-13

F. Installing guide tube with improved (capacitive) ground for automatic antenna

Preceding work:
Telescope of automatic antenna removed (82-8200).
Antenna removed (82-8105).

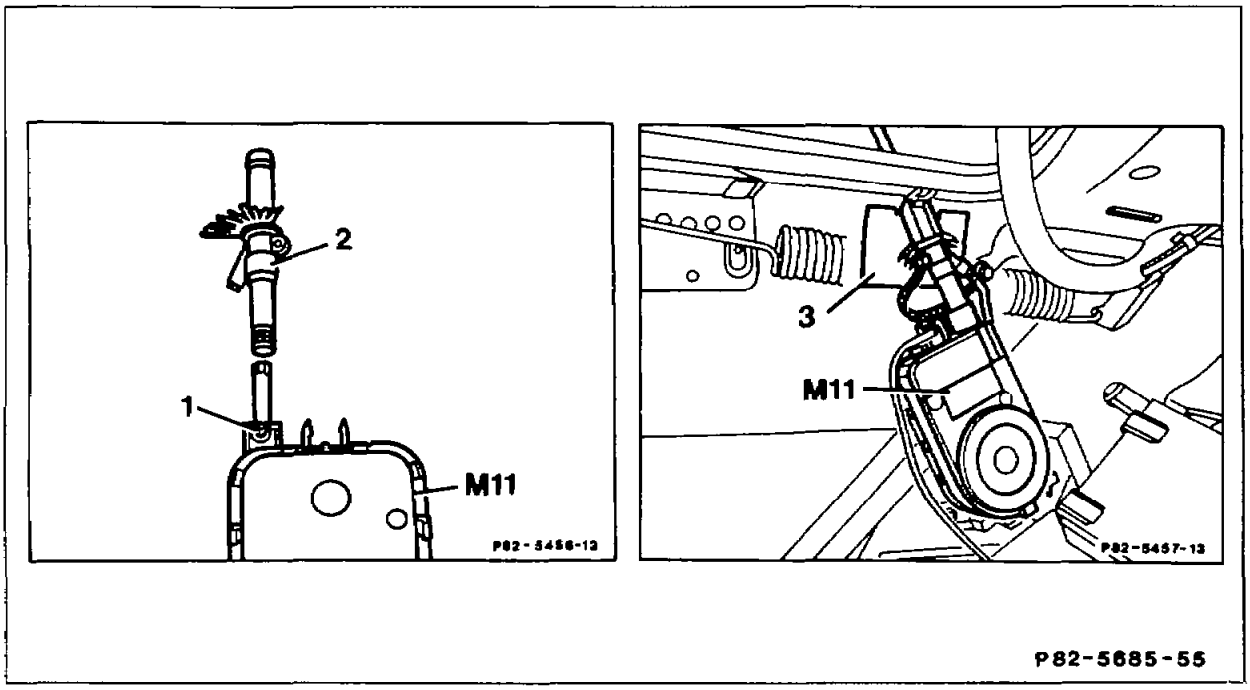

Screw (1)	slacken, tighten.
Guide tube (2)	unscrew, screw in new guide tube (2) and align.
Ground cable at new guide tube (2)	attach.
Ground contact sheet (3)	stick onto inside of fender.

Note

As of 04.92 on model 124.036 an automatic antenna (M11) with improved (capacitive) ground has been installed.
If radio interference exists in VHF range (with the exception of ignition and alternator interference), install guide tube with improved ground.

Model 124.034/036 as of 04/92, all models as of 07/93

Automatic antenna with improved (capacitive) ground.

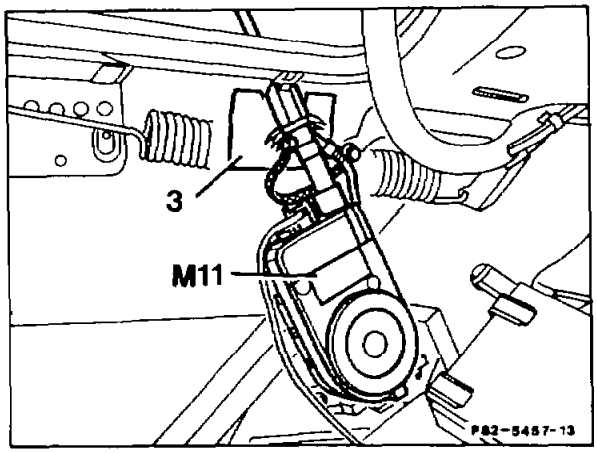

3 Ground contact foil
M11 Automatic antenna

Antenna as of approx. 07/93

The electronic stage was separated from the mechanical stage of the antenna and attached to the mechanical section of the antenna in a separate housing.

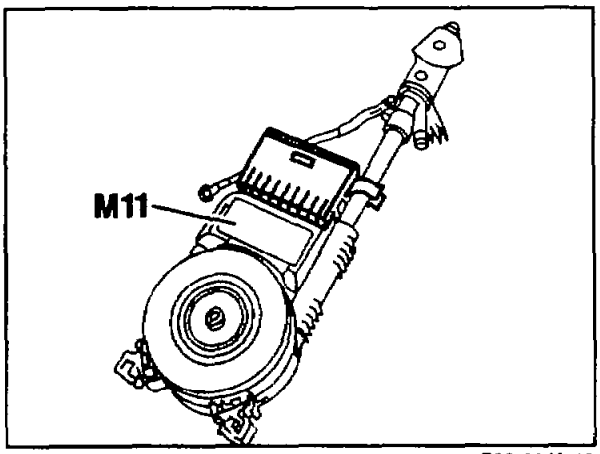

Japan version

The telescoping automatic antenna can be extended half-way or completely with a button on the radio.

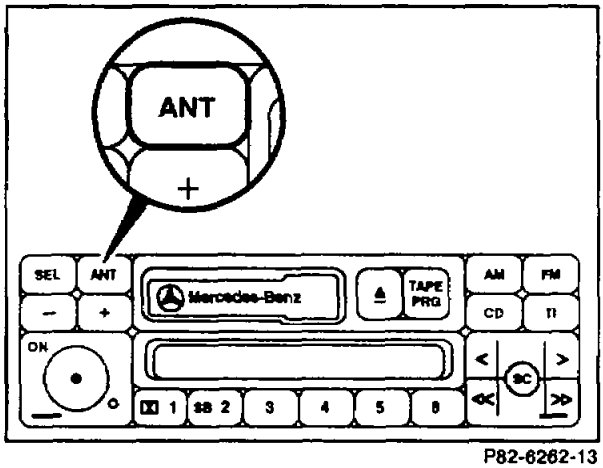

82-8200 Removing and installing telescope of automatic antenna

Operation no. of operation texts and work units or standard texts and flat rates:

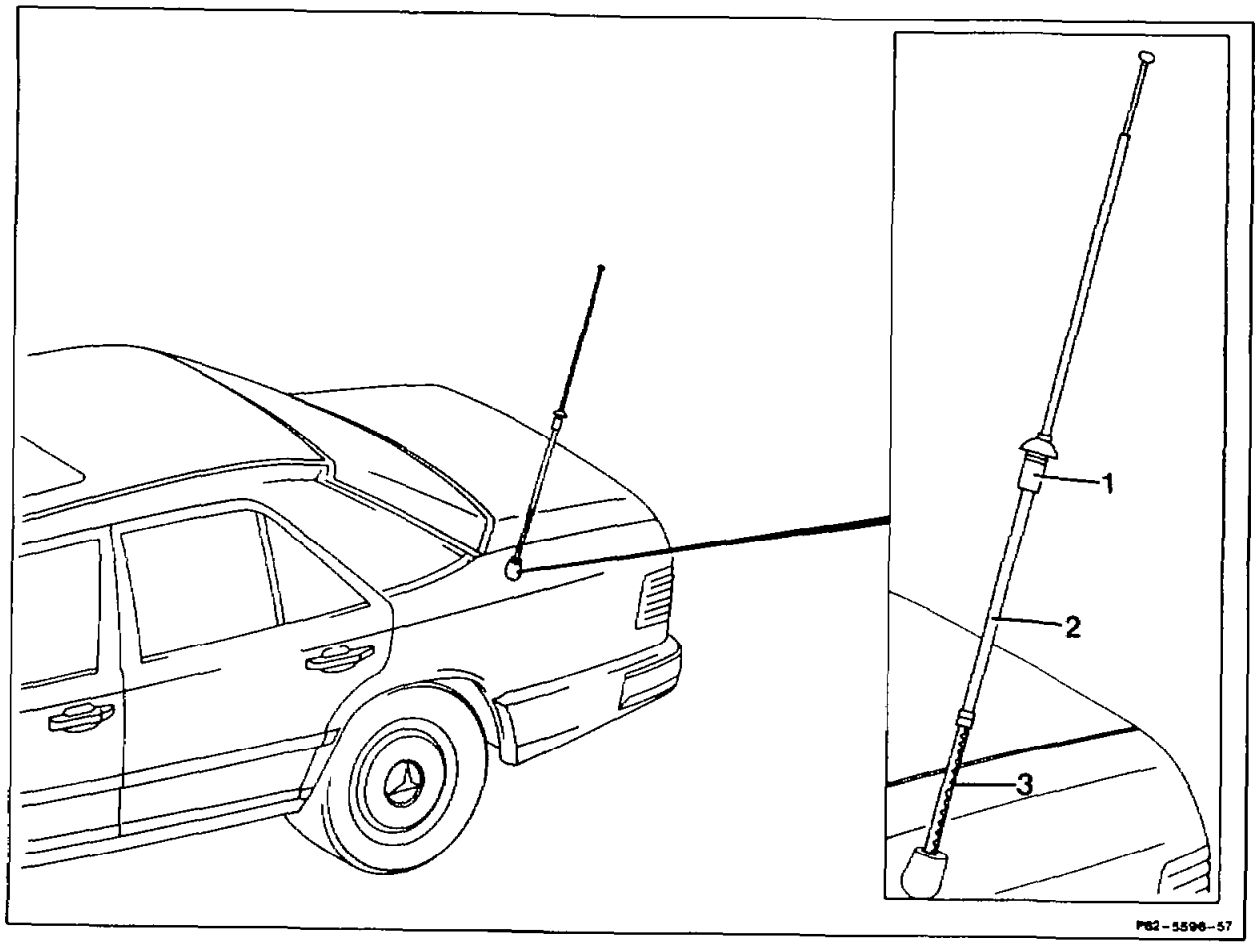

Removal

Securing nut (1)	unscrew.
Radio	switch on (2nd person required). Withdraw the extending telescope (2) with the plastic cable (3).

Installing

Plastic cable (3)	insert with the teeth in opposite direction of travel (in direction of travel for Station Wagon).
Radio	switch off (2nd person required).
Plastic cable (3) and telescope (2)	allow to retract fully.
Securing nut (1)	screw on.

82 Body

Complaint:

All ancillary components connected to terminal 15R, e.g. radio, can also be switched on when key in position 0 and front door open – models with power windows and power seat adjustment.

Cause/Remedy:

Diode of comfort circuit for power windows and seat adjustment is faulty.

Replace diode. Ensure that the comfort circuit at the correct door contact switch is connected (positive circuit). If the connections of the two door contact switches are mixed up, the diode will again be faulty.

Note
The diode is located in a 2-pin coupling in coupler bay I of the relay holder.

Complaint:

Wiper switches on by itself (as of 08/86 with trailer hitch)

Cause/Remedy:

Inteference pulses activate the combination relay (wiper, turn signals, heated rear screen).

Install improved combination relay, as of *production date 058 (5th week 1988).*

Complaint:

Wiper arm of headlamp wash/wipe system occasionally does not return to park position.

Cause/Remedy:

Wipe/wash system was operated too briefly with the result that the actuation time for the headlamp wash/wipe system is not adequate.

Install relay with OFF delay (part no. 126 820 20 26). This relay prevents the wiper arm rising if the windscreen washer switch is only briefly actuated. This relay is installed as standard with effect from 03/89.

Complaint:

Indicator lamp for windscreen washer fluid level lights up even if reservoir is still approx. half full.

Cause/Remedy:

Design-related fault.

The switch point has been modified with effect from 07/88 (reduced remaining quantity).

New pickup, part no. 129 540 02 17.

Complaint:

Indicator lamp for windscreen washer fluid level lights up although reservoir is full.

Cause/Remedy:

The lengthened fluid level pickup (as of 08/88 as standard) is influenced by the magnetic field of the pump of the headlamp wash/wipe system.

Install pump of make VDO (part no. 124 869 03 21). Available from PEW Sindelfingen.
Modified in series production as of 03/89.

Complaint:

Malfunction of sliding roof when switch operated.

Cause/Remedy:

Incorrect setting at motor.
Perform setting in accordance with Introduction into Service, Model 124, Group 77.

82 Body

Complaint:

Speed-related interference to radio reception and cassette operation, model 124.0

Cause/Remedy

This interference (ignition interference) can be transmitted inductively by the wiring harness, which runs below the radio set.

Move terminal block, terminal 58d (X6) to the left. Install bracket (6) for this purpose.
Re-attach wiring harness with clip (7) and cable strap (8).

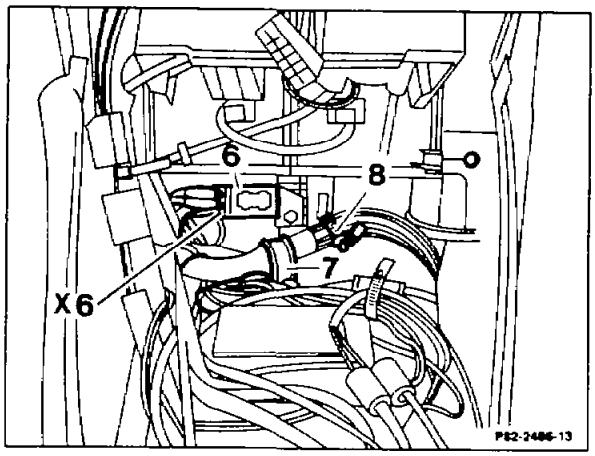

Bracket	part no. 124 545 20 40
Clip	part no. 123 995 08 20

Complaint:

Crackling noises in radio when ignition switched on

Cause/Remedy

1 Model 124 with RÜF/KAT fuel injection engines.
Interference may be caused by the KE control unit. To locate fault, unplug multiple coupling from KE control unit.

2 Vehicles with heated outside rear-view mirror. Thermostat in mirror glass faulty. To locate fault, unplug electrical connection at mirror; replace mirror glass, if necessary.

Checking, correcting A/C refrigerant charge

8312

All models

R 12 Refrigerant capacity

Models	107 129 201.02 201.1	123 126	124	201.034
Capacity	1000 g	1300 g	1100 g	950 g

R 134a Refrigerant capacity

Models	124	129	140 w/o rear A/C	140 w/ rear A/C
Capacity	1000 g	950 g	1200 g	1400 g

All models except model 140

- Clean sight glass (arrow) on receiver/drier.
- Disconnect wire from pressure switch (25).
- With engine idling, turn on air conditioning or automatic climate control ("DEF")
- Observe sight glass (arrow) and at the same time reconnect wire to pressure switch (25). Refrigerant should rise shortly after the electromagnetic clutch engages. Flow should be free of bubbles or foam (refrigerant is clear).

Note: An accurate check of the charge is not possible using the sight glass. At higher ambient temperatures (greater than 35°C) some bubbles may be visible with correct filling quantity.

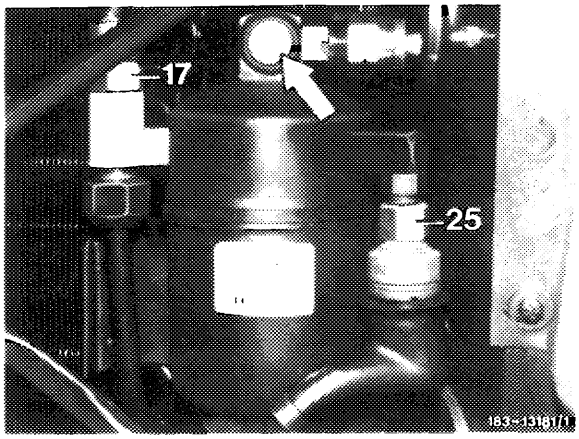

Model 107

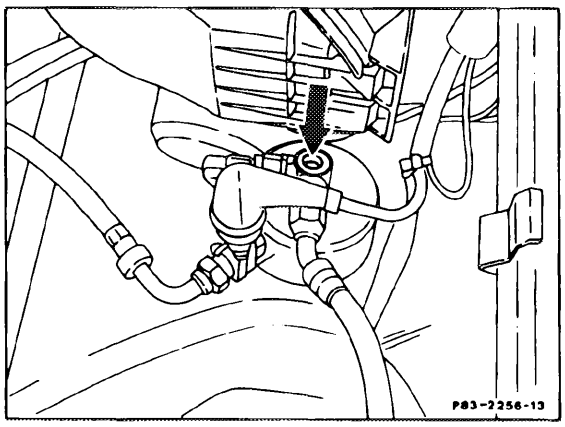

Model 123

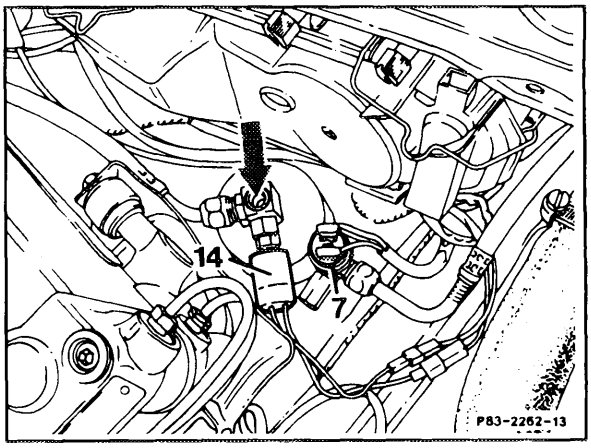

Model 124, 201

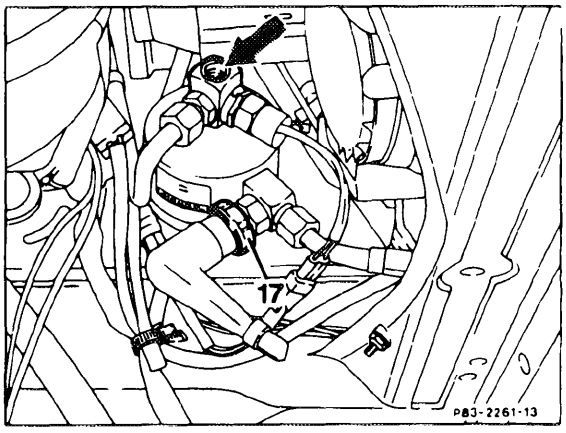

Model 126

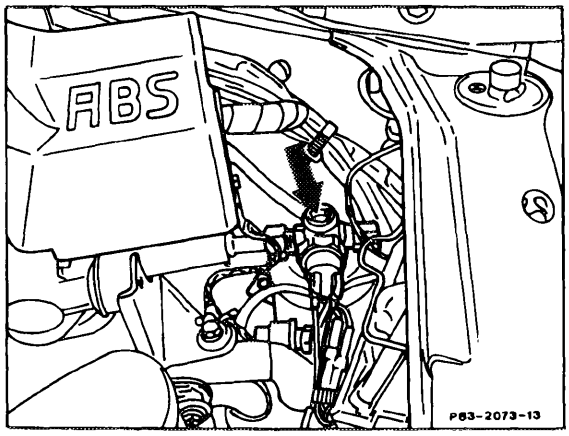

Model 129

Model 140

- Clean sight glass on receiver/drier. Additonal access can be obtained by removing the left headlight bulb access cover.

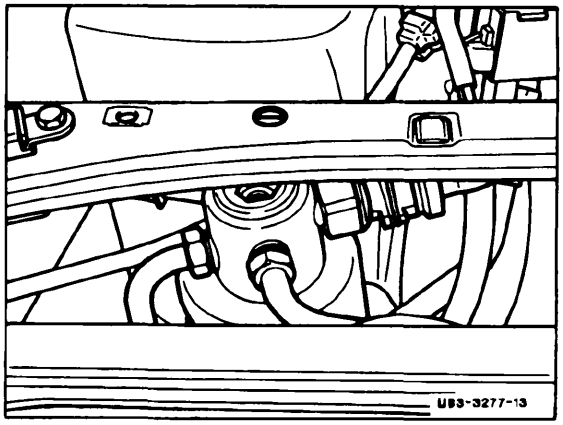

Model 140

- Disconnect connector from coolant temperature sensor B10/8 and bridge connector terminals with jumper wire.

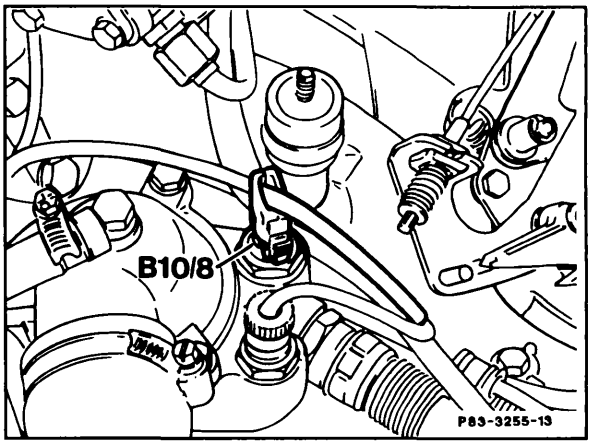

Location of coolant temperature sensor B10/8, M104 engine

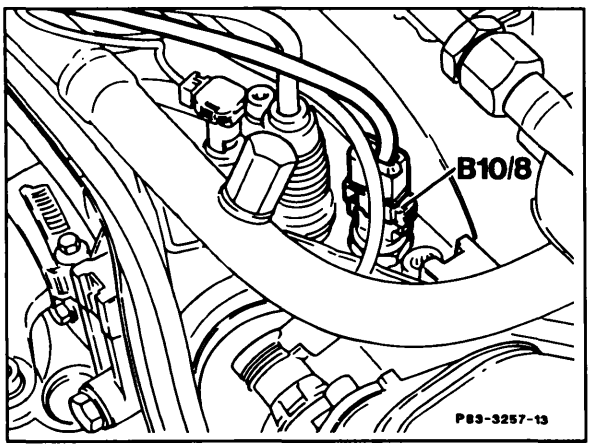

Location of coolant temperature sensor B10/8, M119 engine

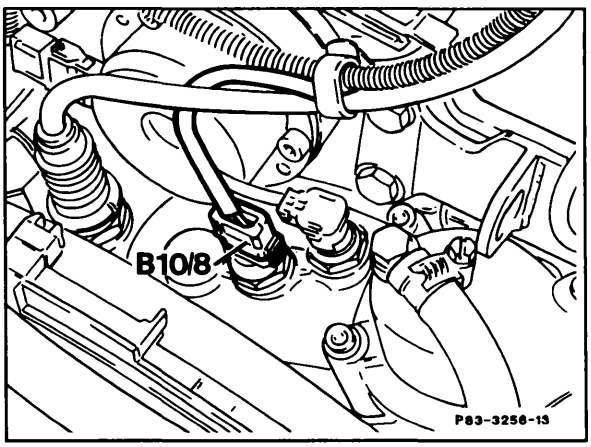

Location of coolant temperature sensor B10/8, M120 engine

- With engine idling, switch on automatic climate control (DEF).

- Observe sight glass and simultaneously remove jumper wire from connector.

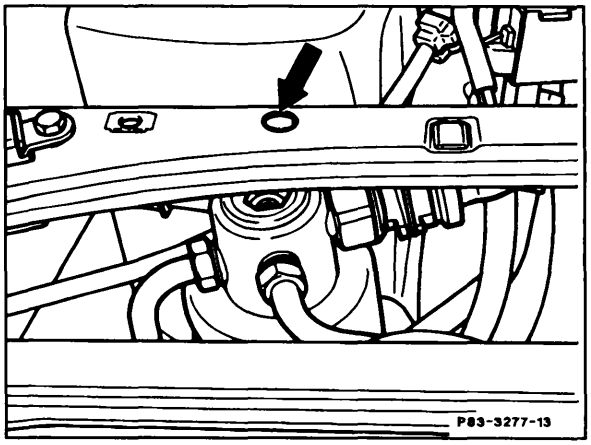

Location of sight glass observation opening (headlamp bulb access cover shown removed)

Refrigerant should rise shortly after the electromagnetic clutch engages. Flow should be free of bubbles or foam (i.e., refrigerant is clear).

Note: An accurate check of the charge is not always possible using the sight glass. At higher ambient temperatures (greater than 35°C) some bubbles may be visible with correct filling quantity.

With refrigerant loss or suspected system leaks , the correct charge can only be ensured by completely evacuating (recycling) and refilling system. System should first be checked for leaks. The correct charge can only be established by weighing the refrigerant or by using a recharging cylinder or automatic air conditioning recharging station.

Refer to the latest information concerning correct charge for each model in the introduction manuals and repair instructions.

Replacing dust filter for heating/ventilation 8381

Model 129 140

Model 129

- Pull out lip seals (arrows).

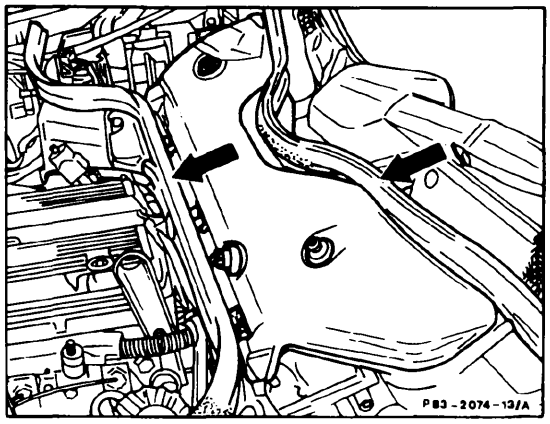

- Unscrew both screws and unclip 3 clips (arrows).
- Pull out temperature sensor B10/5.
- Remove cover (1) and filter box from above.
- Clean filter housing and filter cover.

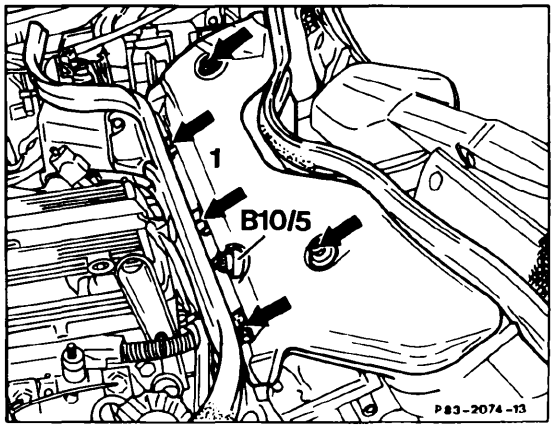

Note:
Do not attempt clean dust filters, they should only be replaced.

- Insert dust filter as shown.

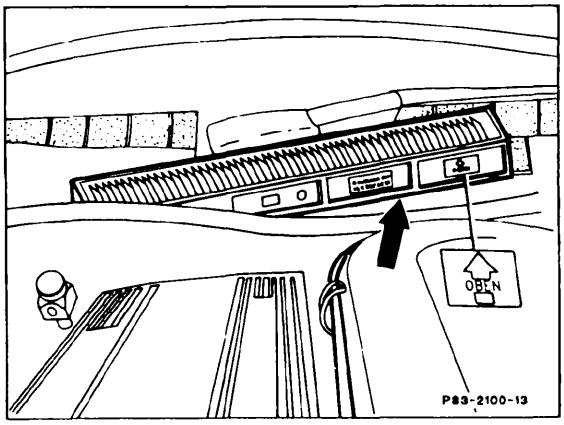

Model 140

- Pull out rubber lip seal (arrow).

- Disconnect pneumatic lines from main air flap actuators (43, 44).

- Remove 6 screws (3) and lift air plenum (2).

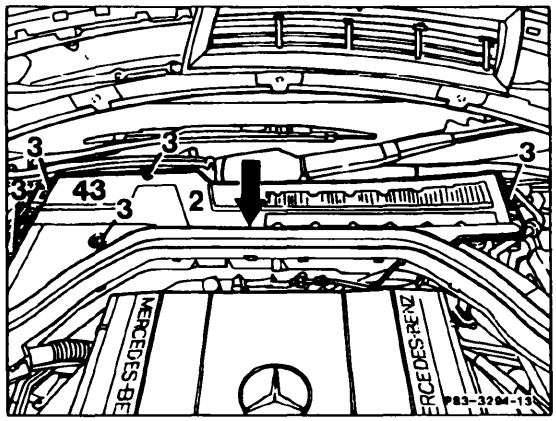

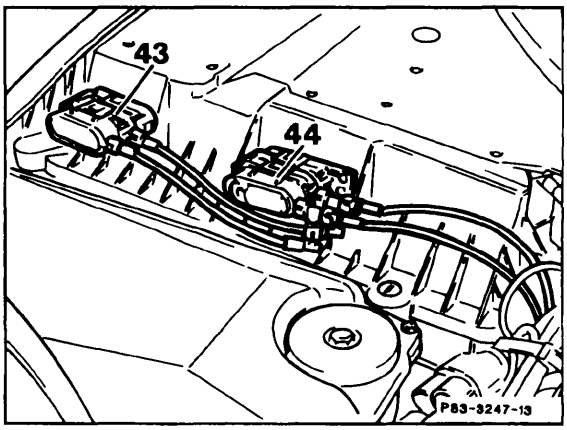

- Pull out temperature sensor (B10/5).

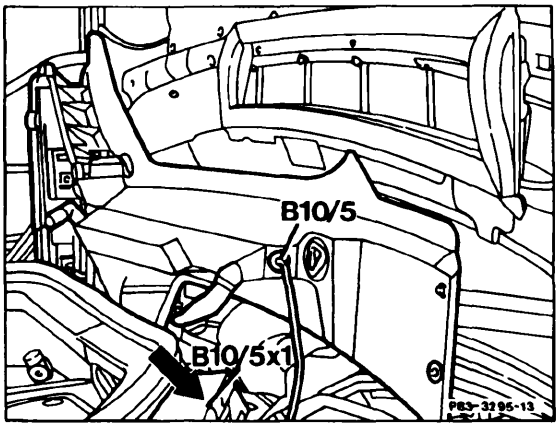

- Lift cover and lift filter cartridge out.
- Clean filter housing and cover.

Note:
Do not attempt clean dust filters, they should only be replaced.

- Install new dust filter (1) according to illustration.

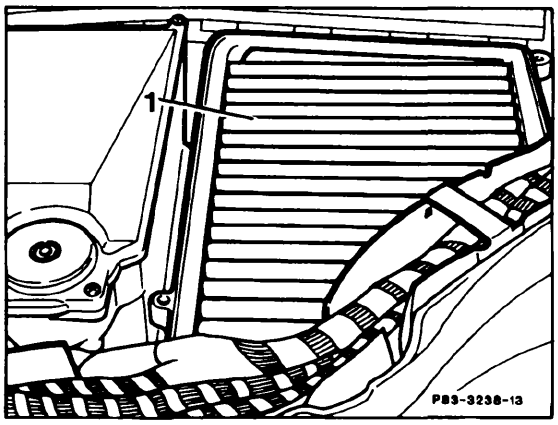

Note:
On vehicles equipped with active charcoal filter, the dust filter is designed as a active charcoal pre-filter. The underside of the filter has a layer of active charcoal. Do not install the simple dust filter intended for vehicles without the active charcoal filter.

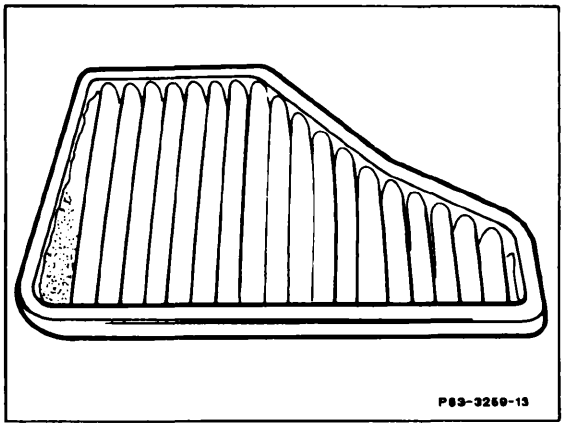

Dust filter for vehicles equipped with active charcoal filter system

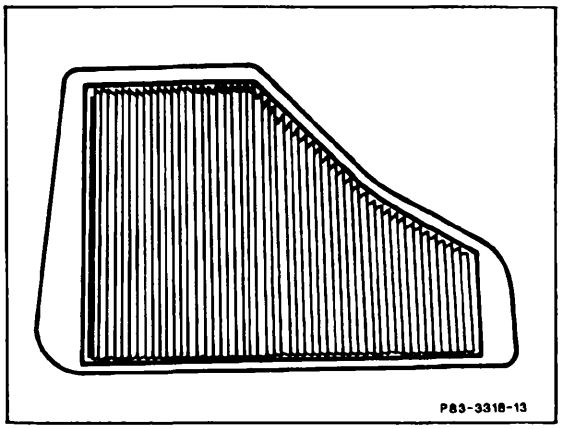

Dust filter for vehicles not equipped with active charcoal filter system

Replacing active charcoal filter

8382

Model 140

Special tools

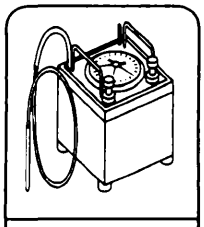

201 589 13 21 00

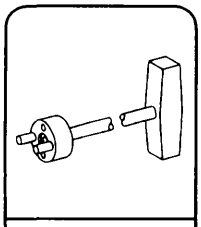

140 589 00 07 00

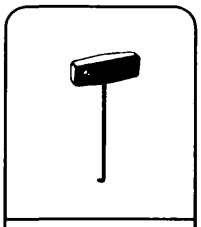

126 589 03 33 00

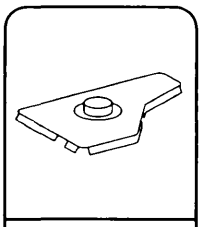

140 589 00 98 00

- Remove windshield wiper assembly (job no. 82-680).
- Remove water collector (4 screws).
- Cover dust filter with protective cover 140 589 00 98 00.

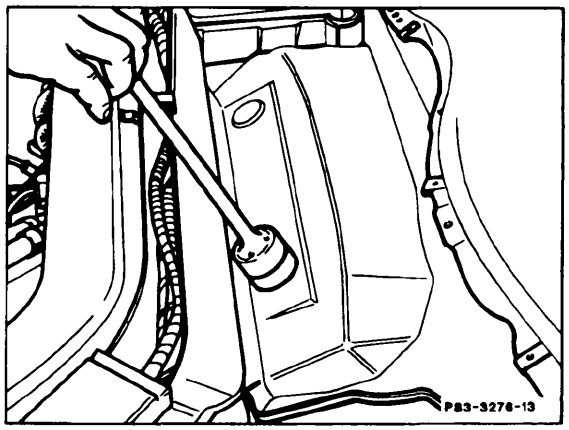

- Remove 5 screws (3) and lid.
- Remove lid inside heater box (5 screws).

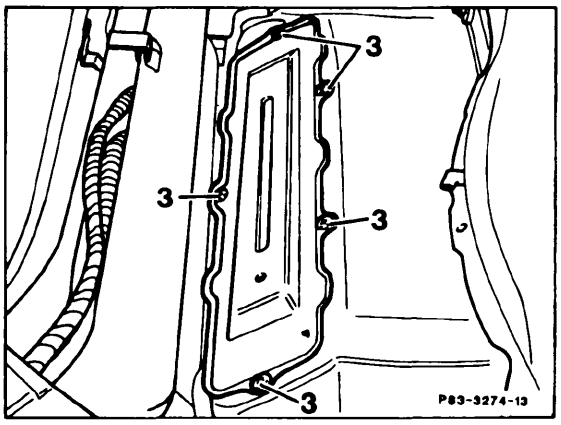

- Using vacuum/pressure tester, apply vacuum to pneumatic seal of active charcoal filter.

- Pull active charcoal filter up (tester remains connected)

- To install, apply vacuum to seal on new filter and insert in opening with pneumatic seal facing toward front of vehicle.

- Remaining components are installed in reverse order of removal.

Note:
The active charcoal filter can not be cleaned.

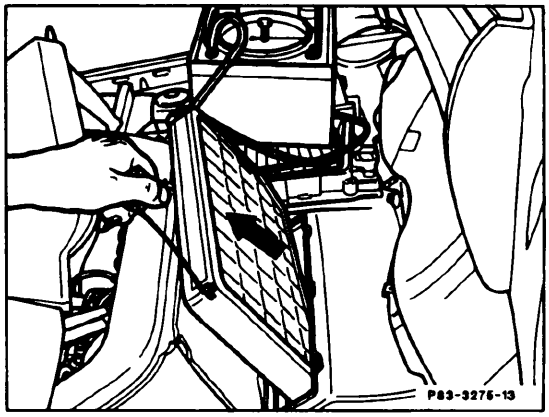

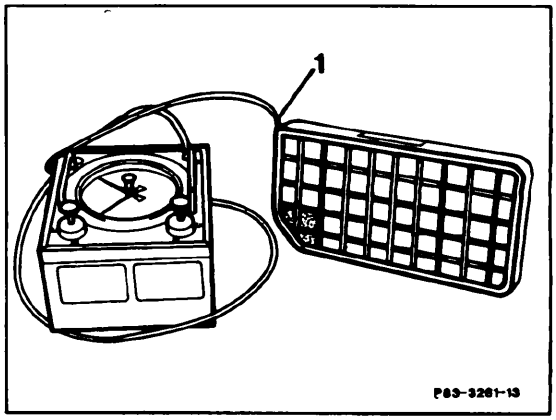

Vacuum connection (1)

Replacing recirculating air filter

8383

Model 140

- Using screwdriver, turn latches (arrows) 90° to left.

- Lower cover with recirculating air filter (2).

- Unclip recirculating air filter from cover.

- Open recirculating air filter housing and remove filter.

Note:
Recirculating air filters can not be cleaned, they must be replaced.

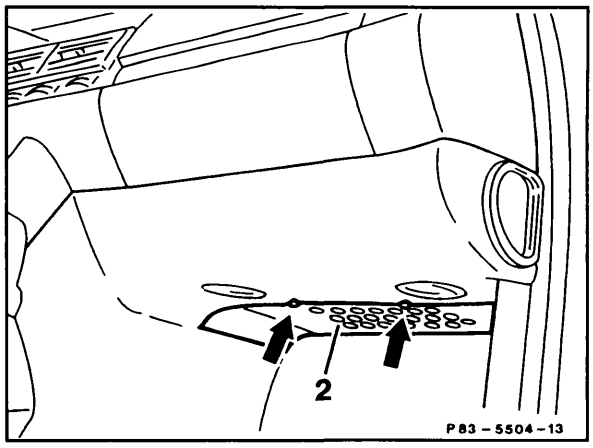

a m b **service information**

TO:	**ALL MERCEDES-BENZ PASSENGER CAR DEALERS**		
DATE:	October 1996 (Supersedes S. I. 83/81B, September 1994)	**REF. NO.**	83/83

Revision: ***Additional information on A/C systems (York and Delco compressors) for conversion of R12 to R134a refrigerant. New retrofit label.***

SUBJECT: **ALL MODELS USING R12 REFRIGERANT IN VEHICLES USING NIPPONDENSO, YORK AND DELCO COMPRESSORS CONVERSION OF R12 TO ENVIRONMENTALLY FRIENDLY R134A**

With the introduction of model 140 in model year 1992, Mercedes-Benz started to use environmentally safe refrigerant R134a. Beginning in 1991, all other models (except 201) were designed to use refrigerant R134a.

Due to the increasingly scarce availability and 1995 production phased of refrigerant R12, models using Nippondenso, York and Delco compressors may be converted for use with refrigerant R134a.

Important:
Mercedes-Benz does not approve of the conversion to any other refrigerant except R134a because of durability and safety concerns.

In case of a necessary repair under the terms of the Limited New Vehicle Warranty or the Spare Parts Warranty **and** if R12 is no longer available, a warranty claim for the conversion can be submitted.
In all other cases, any conversion to R134a is the responsibility of the vehicle owner.
In performing this conversion, the following procedures must be followed.

Note:
The procedure and label in this SI meet Federal EPA requirements per 40CFR Part 82 at 61 FR 25585.

A. Preparation/Testing of the A/C system

B. Testing A/C System for Refrigerant Leaks

C. Removal of Mineral Oil from A/C System

D. Replacing Receiver/Drier

E. Installation of Service Valves

Copyright DaimlerChrysler AG 12.07.2004 CD-Ausgabe G/05/02 Will not be recorded by Modification services

F. Filling A/C System with R134a Refrigerant

G. Affixing new R134a Retrofit Label

H. Performing Final Function Test of A/C System

Before proceeding with the conversion to refrigerant R134a, park vehicle inside workshop and allow vehicle to attain workshop temperature (approx. 70°F).

⚠ **CAUTION!**
Wear protective eye-wear when working on the A/C system.

A. Preparation/Testing of the A/C system

1. Attach A/C pressure gauges to the low- and high-side of the A/C system and verify the proper function and pressures of the A/C system.

2. Run engine at idle.

3. Press or button.

4. Check/verify refrigerant fill level capacity (see Maintenance Manual, Job No. 8312).

B. Testing A/C System for Refrigerant Leaks

1. If A/C system is void of any R12 refrigerant or the compressor will not engage, check refrigerant compressor for binding by rotating A/C compressor by hand.

2. If A/C compressor binding is not present, fill A/C system with fresh/recycled refrigerant and perform refrigerant leak test. (Figure 1).

   ⚠ **CAUTION!**
   Observe specifications on Fill Capacity Label.

3. Check for proper operation of A/C system.

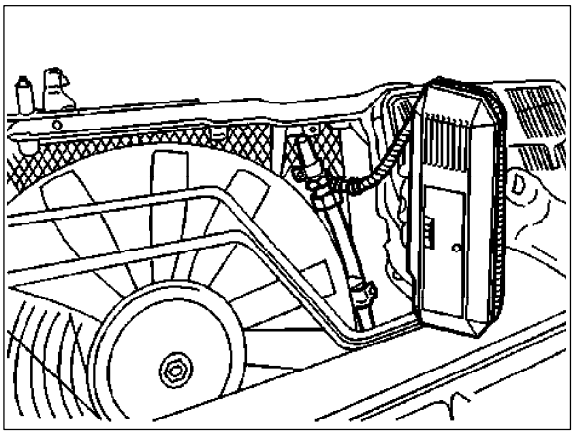

Figure 1 P83.30-0225-01

Models 124, 129
If parts require replacement, only R134a-type components are to be installed.

Models 107, 116, 123, 126, 201
If the A/C lines, condenser or evaporator require replacement, please continue with
C. Removal of Mineral Oil from A/C System .

Copyright DaimlerChrysler AG 12.07.2004 CD-Ausgabe G/05/02 Will not be recorded by Modification services

Note:
If replacing the A/C compressor, use a compressor designed for refrigerant R134a if available. If a R134a compressor is not available as a spare part, be certain to drain the mineral oil from the new R12 compressor prior to installation.

⚠ **CAUTION!**
In this case, do not refill A/C system with R12, please continue with D. Replacing Receiver/Drier .

C. Removal of Mineral Oil from A/C System

Note:
During the conversion to R134a refrigerant, it is important to remove as much mineral oil from the A/C system as possible.

Procedure

1. Press button.
2. Set temperature selector wheels to max. heat detent (red zone).
3. Press button.
4. Engage max. A/C fan speed (Tempmatic) or Press if automatic A/C.
5. Close all doors and windows.
6. Run engine at 2000 rpm for approx. 10 minutes.
7. Stop engine.
8. Using air conditioning service equipment, evacuate R12 refrigerant at high- and low- pressure sides (A, Figure 2 and B, Figure 3) of A/C system for 45 minutes.

Note:
A/C service equipment should be able to pull at least 29.2" of vacuum.

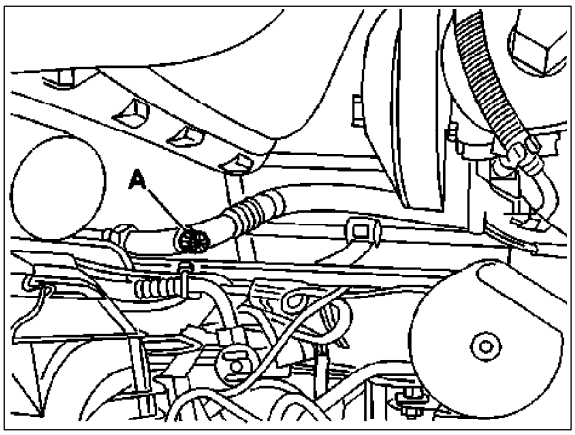

Figure 2 P83.30-0222-01

A Location of service valve on high pressure side

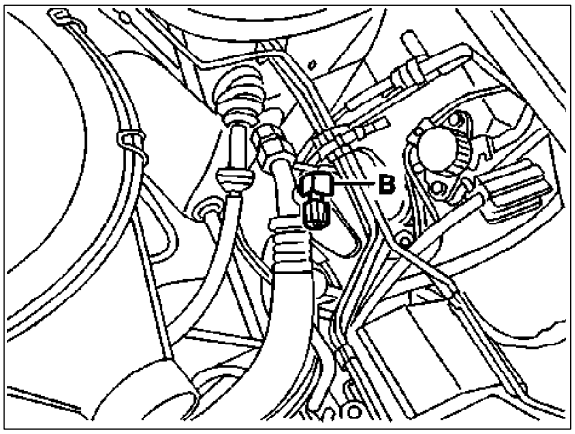

Figure 3 P83.30-0223-01

B Location of service valve on low pressure side

Copyright DaimlerChrysler AG 12.07.2004 CD-Ausgabe G/05/02 Will not be recorded by Modification services

9. Refill recycled R12 once again into A/C system.

10. Operate A/C system again, as in above steps 1-7 for approx. 10 minutes.

⚠ CAUTION!
Should the A/C compressor become noisy, stop engine and continue with D. Replacing Receiver/Drier .

11. Using air conditioning service equipment, evacuate the R12 at high- and low- pressure sides (A, Figure 2 and B, Figure 3) of A/C system for 45 minutes.

Note:
A/C service equipment should be able to pull at least 29.2" of vacuum.

⚠ CAUTION!
At this point, R12 is not to be used in A/C system again.

D. Replacing Receiver/Drier

Please see SMS (beige microfiches), Repair Instructions, Job No. 83-540.

E. Installation of Service Valves

⚠ CAUTION!
Prior to the installation of the angled service valve (Figure 6) or adapter hose (4, Figure 7) the existing Schrader valve core (arrow, Figure 4) located in A/C line must be removed.

1. Depending on accessibility, select the appropriate service valves (Figure 5 and Figure 6) or adapter hose (4, Figure 7) and install on the low- and high-pressure side of the A/C system (A, Figure 2 and C, Figure 4).

Tightening torque: 7.5 ± 0.5 Nm

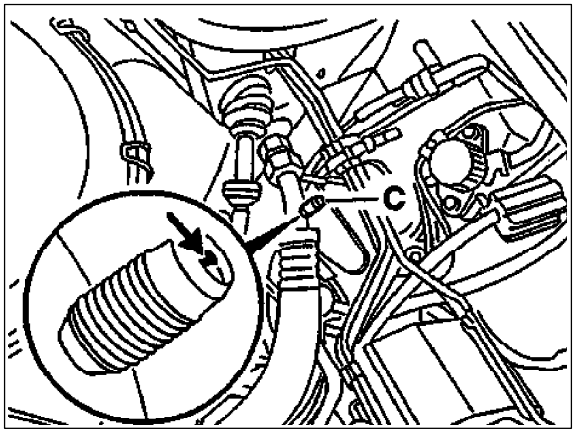

Figure 4 P83.30-0221-01A

Copyright DaimlerChrysler AG 12.07.2004 CD-Ausgabe G/05/02 Will not be recorded by Modification services

⚠ **CAUTION!**
The threads of the service valves are treated with a chemical thread locker, which becomes effective after 15 minutes. When installing the hose, make certain that the hose and service valve do not come in contact with any moving parts. Removal of the service valve beyond this time span is not possible.

Standard service valve (without Schrader valve), the Schrader valve in the A/C line remains installed.
High-pressure side: Red protective cap.
Low-pressure side: Blue protective cap.

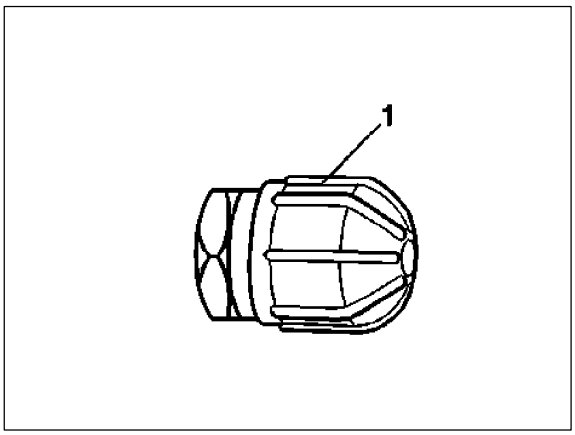

Figure 5 P83.30-0220-01

Angled service valve (with Schrader valve), the Schrader valve in the A/C line is to be removed.
High pressure side: Red protective cap.
Low pressure side: Blue protective cap.

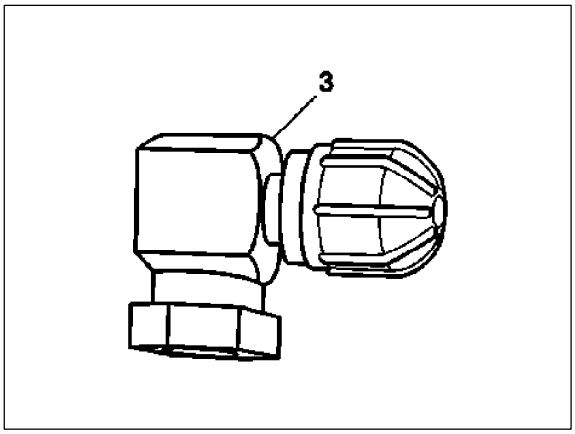

Figure 6 P83.30-0219-01

Note:
The adapter hose (4, Figure 7) is designed for use in areas with difficult access to the service valve. Additionally, depending on the application (high- or low-pressure side), the standard service valve with respective protective cap (Figure 5) must be installed on the open end of the adapter hose (circle, Figure 7).

⚠ **CAUTION!**
Be careful not to mix up low-pressure (blue) and high-pressure (red) service valve caps when installing the service valves into A/C lines.

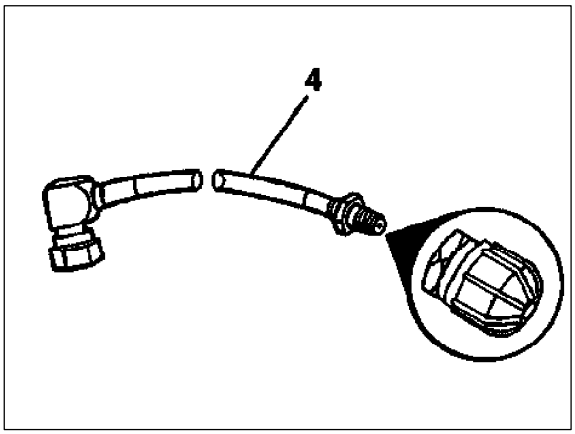

Figure 7 P83.30-0218-01A

F. Filling A/C System with R134a Refrigerant

1. Evacuate A/C system using air conditioning service equipment.
2. Fill A/C compressor with PAG oil, note fill capacity in table below.
3. Fill A/C system with refrigerant R134a, note fill capacity in table below.
4. Run engine at idle speed for approx. 5 minutes.

Copyright DaimlerChrysler AG 12.07.2004 CD-Ausgabe G/05/02 Will not be recorded by Modification services

R134a Refrigerant and PAG Oil Fill Capacities

Model	Refrigerant fill capacity in g	PAG oil fill capacity in ml
107	1)	2)
116	1)	2)
123	1)	2)
124	900 g	140 ml
126	1100 g	140 ml
129	850 g	140 ml
201	850 g	140 ml

1) Original fill - less 10%.

2) Refer to specific model original equipment A/C compressor oil fill requirements.

G. Affixing the new R134a Retrofit Label

1. Using a permanent marking pen, note fill capacities of R134a refrigerant and PAG oil in the appropriate boxes of the new R134a retrofit label (part number S-2659-096), along with the conversion date and information on the individual performing retrofit (Figure 8). **Do not use the old label (part no. ~~140 817 10 20~~), because it does not comply with the US Federal EPA regulations.**

2. Affix the new R134a Retrofit Label over the existing label.

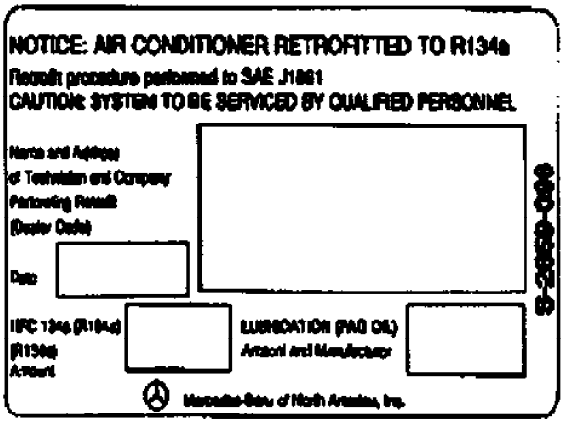

Figure 8 S-2659-096
Retrofit Label color: sky blue

H. Performing Final Function Test of A/C System.

1. Perform final function and leak test of the A/C system to verify proper function of the entire A/C system.

Special Tool Information

A service kit, intended to clean and refurbish damaged threads on the A/C service valve, as a part of the conversion process. An item list of the A/C service tool kit along with information on contacting Kent-Moore directly are noted below.

Copyright DaimlerChrysler AG 12.07.2004 CD-Ausgabe G/05/02 Will not be recorded by Modification services

J 39500-275 Kit Includes:

J 25498-A High Side Adapter Fitting
This adapter allows connection of a standard R-12 ¼" flare service hose to the ⅞" flare high side service port. (The retrofit procedure calls for R-12 recovery from the high side only with A/C compressor operating).

J 34611-A Double Ended Valve Core Remover.
One end is for servicing the larger valve core and is also required to adjust or service the valve core pin extension of the R-12 to R-134a retrofit adapter. The other end is a standard size valve core remover with sufficient length to reach through a retrofit adapter.

J 38702 Deep Core Adapter Fitting
This adapter is required for high side port connection on some 1991 and newer A/C systems (retrofit procedure calls for R-12 recovery from high side only, with A/C compressor operating.)

J 39037 High Side Octagon Socket
This socket is required to install high side R-12 to R-134a port converter.

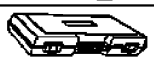

J 39500-69 Storage Case
This storage case holds the complete A/C Retrofit Service Tool Kit.

J 41256 Low Side Octagon Socket
This socket is required to install low side R-12 to R-134a port converter.

J 41265 Thread Cleaning Wire Brush
The R-12 port threads need to be cleaned for effective adhesion of the Loctite material used to lock port converters in place.

J 41266 Low Side Port Thread Restorer
This tool is a 7/16" – 20" thread die to restore damaged threads of an R-12 low side port before installing a port converter.

J 41267 High Side Port Thread Restorer
This tool is a ⅜" - 28" thread die to restore damaged threads of an R-12 high side port before installing a port converter.

U83.81-0001-JH

Description	Part Number
A/C Retrofit Service Tool Kit	J 39500-275

- Kent-Moore — Phone: 1-800-345-2233, Fax: 313-578-7375

Additional A/C Service Equipment Information

Snap-on/Sun

Description	Part/Model No.	Dealer price ($)
"Kool KARE" Recycling Center R12 1)	EEAC101A	3,374.25 2)
"Kool KARE" Recycling Center R134a 1)	EEAC104A	3,524.25 2)

1) Available via MBNA Standard Equipment Program.

2) Denotes current dealer price at this time.

Automotive Diagnostics (Bear)

Description	Part/Model No.	Dealer price ($)

Copyright DaimlerChrysler AG 12.07.2004 CD-Ausgabe G/05/02 Will not be recorded by Modification services

Recovery/Recycling/Recharging System R12 1)	40-375	3,905.00 2)
Recovery/Recycling/Recharging System R134a 1)	40-380	4,245.00 2)

1) Available via MBNA Standard Equipment Program.

2) Denotes current dealer price at this time.

Parts Information

Part Name		Part Number
Standard service valve	Low-pressure side	000 835 07 51 1)
	High-pressure side	000 835 06 51 1)
Angled service valve	Low-pressure side	000 835 09 51 1)
	High-pressure side	000 835 08 51 1)
Adapter hose		000 830 17 96 2)
PAG compressor oil		001 989 08 03
R134a refrigerant 15 lb. container		Q 4 83 0191
R134a refrigerant 30 lb. container		Q 4 83 0190
R134a Retrofit Label		S-2659-096 3)
Receiver/drier		Per model application

1) as required.

2) order with hose: Standard service valve.

3) the label part number is a literature number and must be ordered separately via MB-Net. Do not combine with order for parts.
We suggest ordering a sufficient number of retrofit labels in advance.

Time Allowance Information

Recommended labor times to convert A/C refrigerant system from R12 to R134a:

1. A/C system with R12 refrigerant Convert to R134a = 1.7 hrs. (changed).
2. A/C system with R12 refrigerant Convert to R134a = 1.2 hrs (with compressor replacement).

In Case of Warranty

During warranty repairs on vehicles with R12 refrigerant A/C systems, it may become necessary to have the A/C system converted to use R134a refrigerant.

1. Please use damage code and operation number of the damage causing part.
2. Operation No. 83-1762-00 and time allowance for A/C system refrigerant evacuate/charge .
3. Operation No. 83-0000-01, 0.2 hrs. (install service valves and affix retrofit label).

Note:

Operation numbers and time allowances are subject to change. Refer to the latest MBNA Warranty Time Guide for updates.

Copyright DaimlerChrysler AG 12.07.2004 CD-Ausgabe G/05/02 Will not be recorded by Modification services

Complete Service Manual coverage for Mercedes-Benz vehicles consists of:

Service Manual, Engine
Service Manual, Chassis and body
Service Manual, Automatic Climate Control

Throughout these manuals, the vehicles are identified by their chassis and engine numbers. These numbers are made up of the first six digits of the respective serial number. For the actual location of chassis and engine numbers, see page 00–015/1. In case where the repair instructions apply to all versions, only the first three digits of the respective number are referenced.

For example, chassis 124 applies to all 124 models. However, chassis 124.090 would only apply to model 300 TE.

Location of specific repair instructions

First locate the Group No. in the Group Index. Individual groups are separated by an easily visible dividing page, which is followed by the job index page. Then check the job index for the exact job required. The first page of a typical job description looks like this:

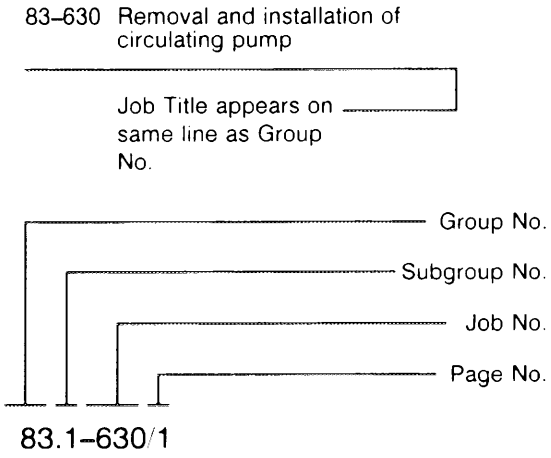

Technical data, tightening torques and tools are listed at the beginning of each job.

All dimensions are in metric units, unless otherwise indicated. Any part numbers given are only used for identification and easier differentiation between individual components, and are not intended for ordering purposes.

This manual applies to the following passenger cars, starting model year 1968:

Model	USA Model Year		Chassis Type	Engine Type
	From	To		
260 E	1987	-	124.026	103.940
300E	1986	-	124.030	103.983
300 CE	1988	-	124.050	103.983
300 TE	1988	-	124.090	103.983
300 D Turbo	1987	-	124.133	603.960
300 TD Turbo	1987	-	124.193	603.960

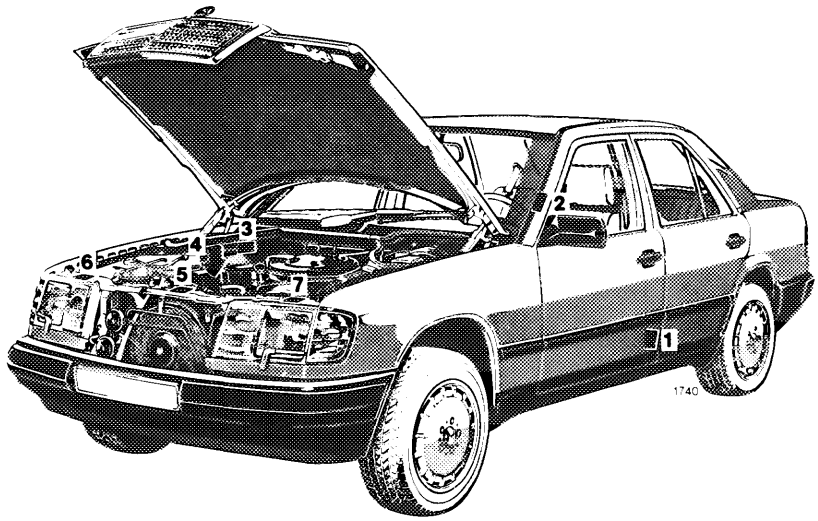

1 Certification Tag (left door pillar)
2 Identification Tag (left windshield post)
3 Chassis No.
4 Engine No.
5 Body No. and Paint work No.
6 Information Tag
California version
Vacuum line routing for emission control system
7 Emission Control Tag

83-140 Grille on air inlet removal and installation

A. Up to 03/93

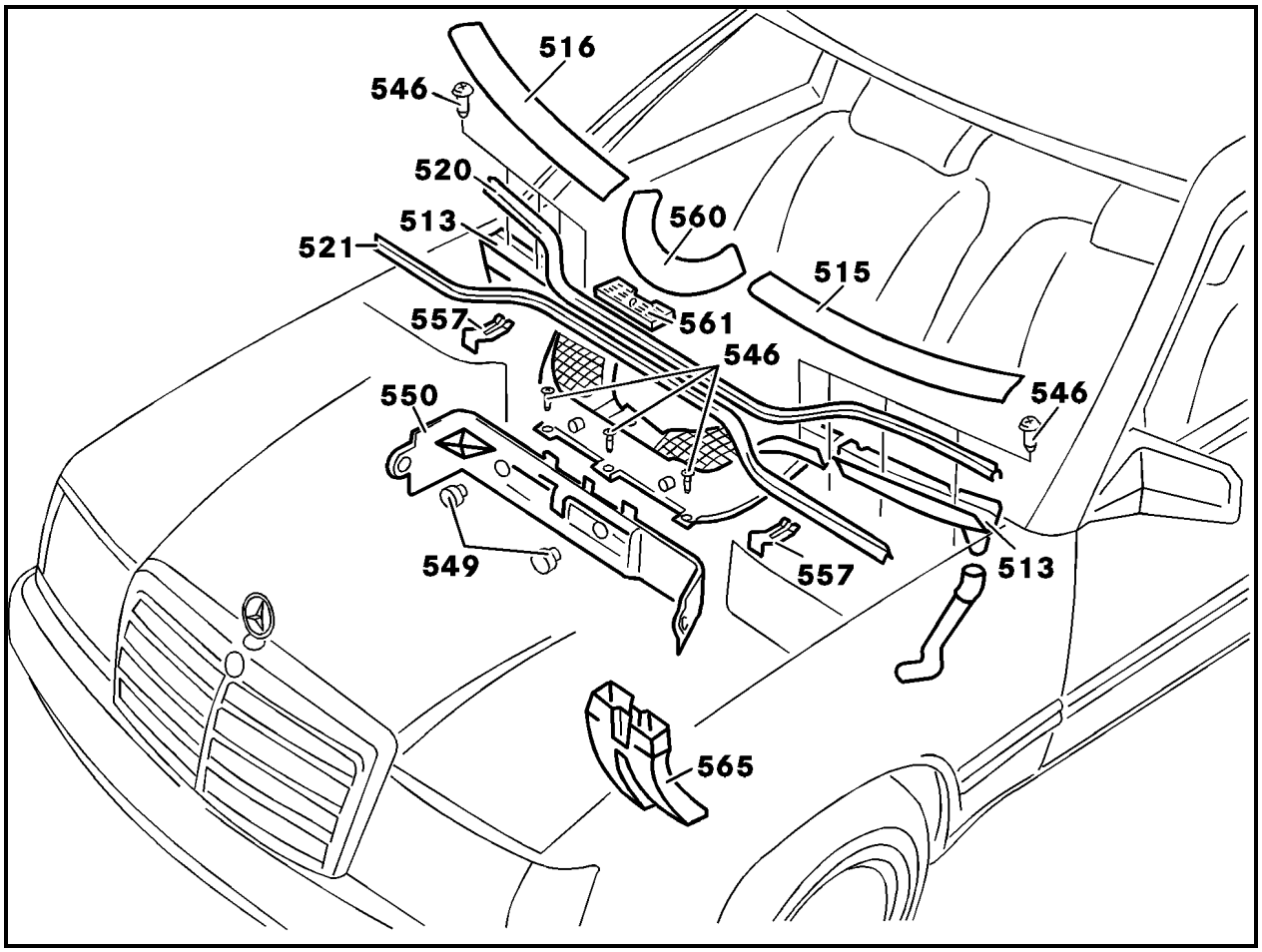

Figure 1 P83.25-0321-57

Moldings (520, 521).....remove, install (figure 1).

Fascia (515, 516) .....remove, install.

Installation note

Check for correct seating of all rubber lips (figure 2).

Clips (557).....remove, install (figure 3).

Screw (546).....unscrew, remove water flows (513).

Installation note

Check for correct assembly of water flows and drain tubes (figure 4).

Cover (560) .....from, attach (figure 5).

Screw (549).....solve, dress (figure 6).

Divider (550).....Remove.

Installation note
Reference (Figure 7).

1 Moldings (520, 521) pull-off. Position wiper in middle. Extract and remove.

2 Fascia (515, 516) with plastic edge lift upward under the rubber lip at the wiper.

Installation note
Check for correct seating of all rubber lips at the A-pillars and at the wiper linkage.

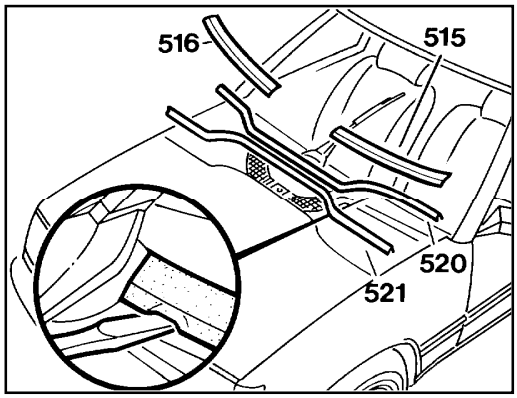

Figure 2 P83-2183-13

3 Clips (557).

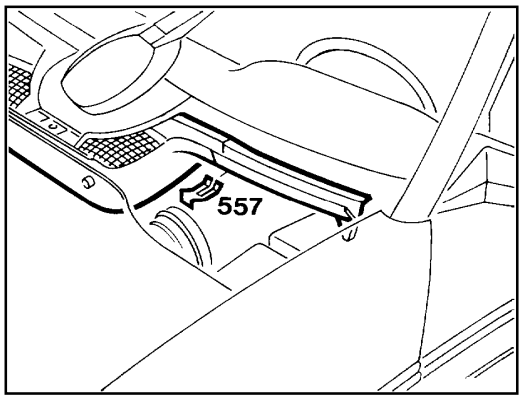

Figure 3 P83-2184-13

4 Screws (546) unscrew. Remove water flows (513) to the left and to the right.

Installation note
Check for correct assembly of water flows and drain tubes.

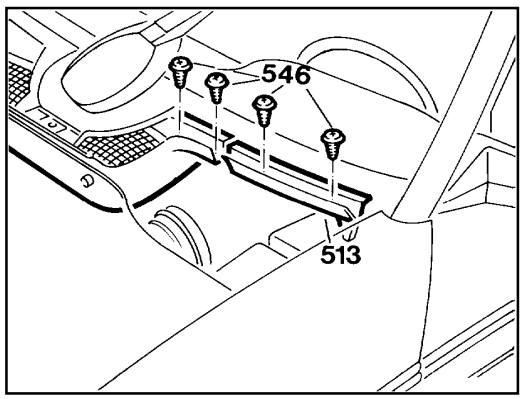

Figure 4 P83-2185-13

5 Wipers in park position and remove cover (560).

(W124, not shown are four screws that are holding a half ring down. Remove all four prior to removing cover (560).)

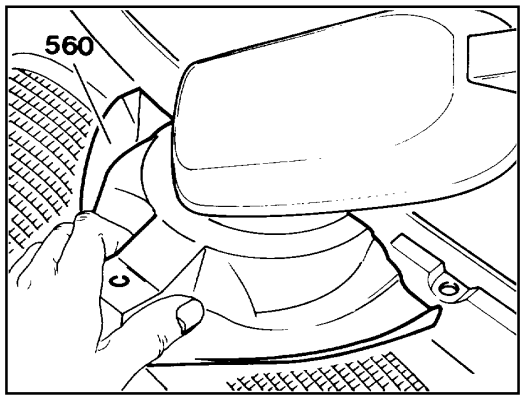

Figure 5 P83-2186-13

6 Screws (549) unscrew at middle divider (550) take out. Remove.

7 Screws (546) unscrew from cover at the air entrance. Remove.

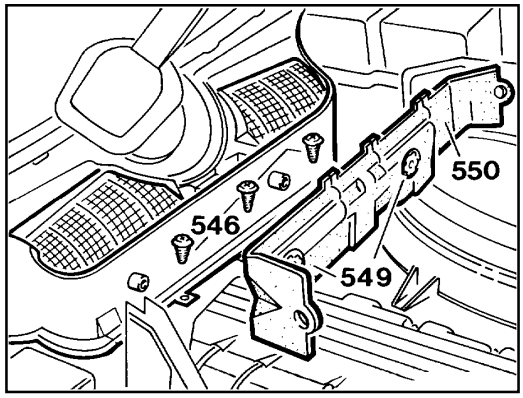

Figure 6 P83-2188-13

During Installation of Foliage Grille.

Insert flow rubber (570) in water canal (565) with a screwdriver through the foliage grille. Form a unit in reversed sequence.

(NA W124, these parts may not be present.)

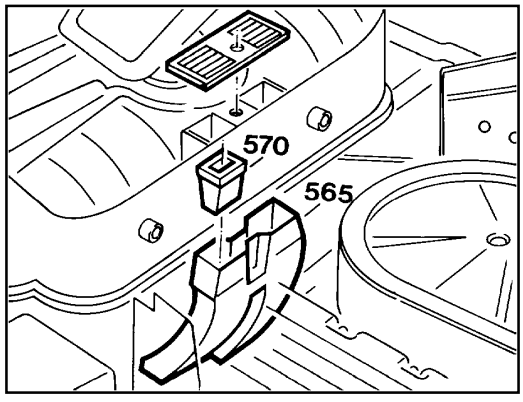

Figure 7 P83-2189-13

B. From 04/93

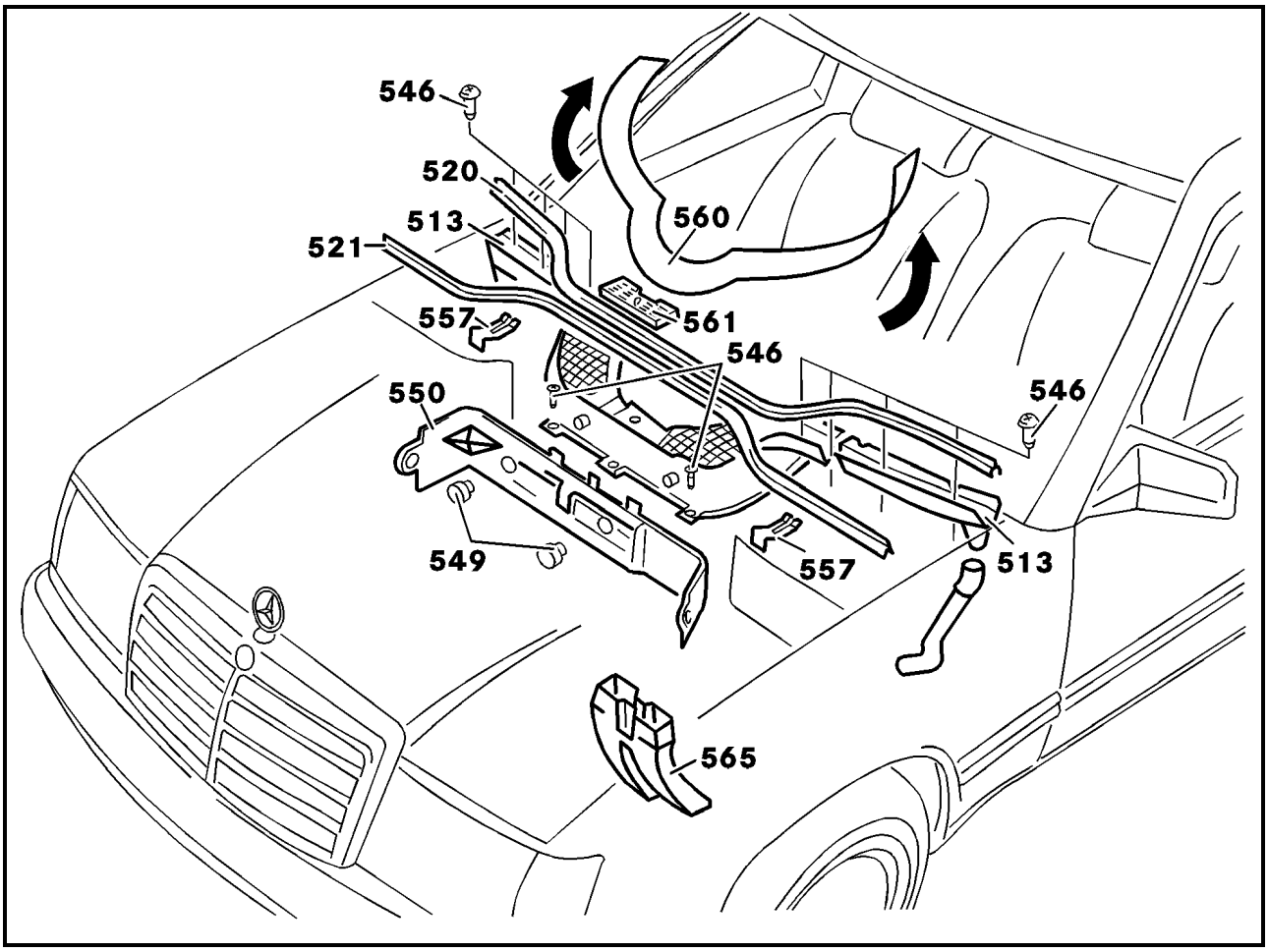

Figure 1 P83.25-0320-57

sealing (560) .....draw-off, attach (figure 1).
Installation note
Check for correct seating of all rubber lips (figure 2).

Clips (557).....extract, insert (figure 3).

Screw (546).....unscrew, water flows (513).
Installation note
Check for correct assembly of water flows and drain tubes (figure 4).

Cover (560) .....insert, attach.

Screw (549).....unscrew, screw (figure 5).

Divider (550).....Insert.

Installation note
Reference (Figure 5).

1 Sealing (520, 521) draw-off. Position wiper in middle. Extract and remove.

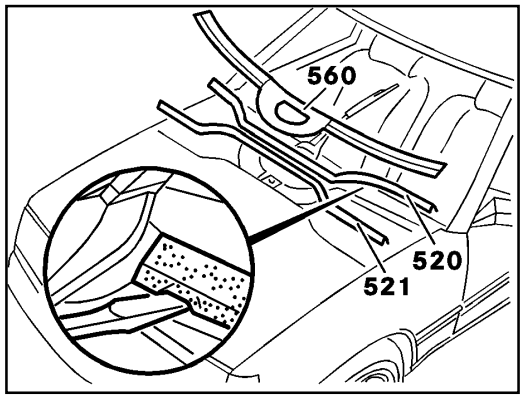

Figure 2 P83-0322-13

2 Sealings (560) with plastic wedge pull, outward under the rubber lip at the wiper.

Installation note
Check for correct seating of all rubber lips at the A-pillars and at the wiper linkage. Remove.

3 Clips (557).

(Fragile, one on each side.)

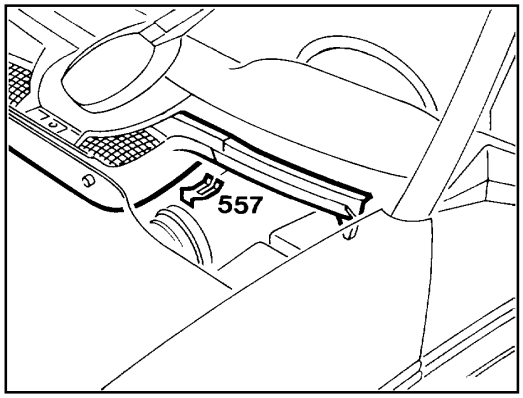

Figure 3 P83-2184-13

4 Screws (546) unscrew. Decrease water flows (513) to the left and to the right.

During Installation
Check for correct assembly of water flows and drain tubes.

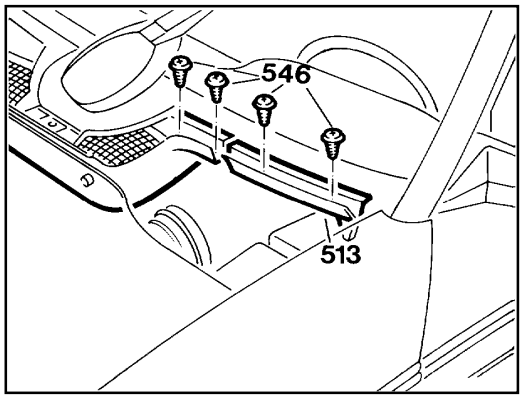

Figure 4 P83-2185-13

5 Screws (549) unscrew and middle divider (550) take out.

6 Screws (546) unscrew and cover at the air entrance. Form a unit in reversed sequence.

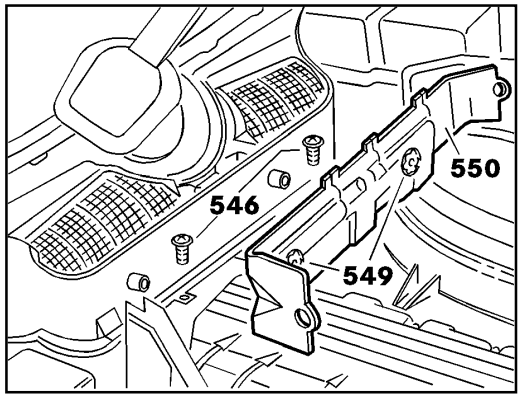

Figure 5 P83.25-0323-13

Installation note
Check for correct seating of the water flows (565).

(NA W124, this part may not be present.)

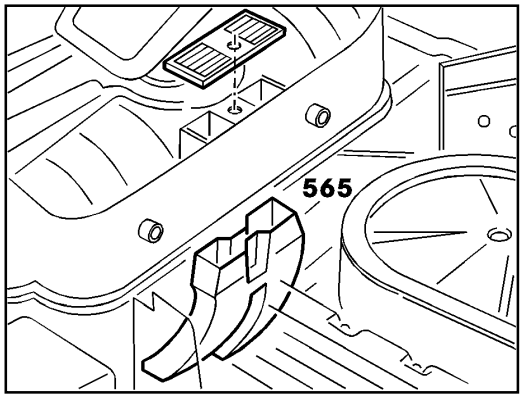

Figure 6 P83.25-0324-13

Operation number of operation texts and work units or standard texts and flat rates
83–0291

A. Up to approx. 05/90

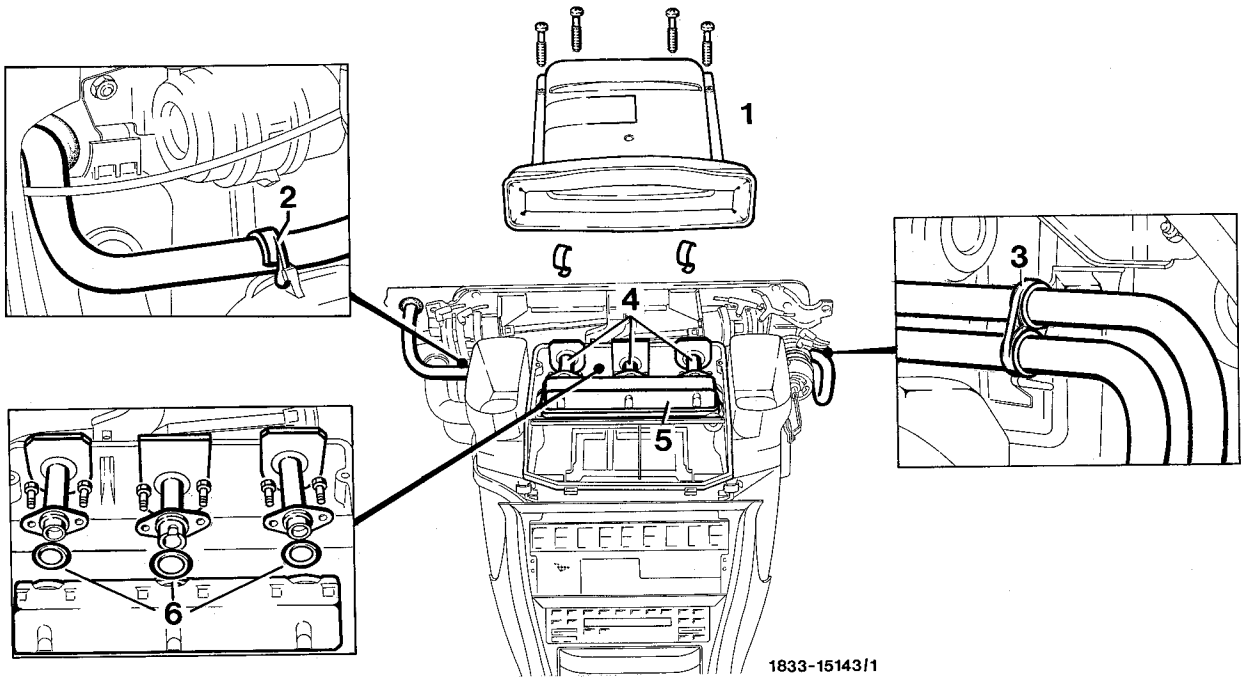

Battery	disconnect.
Coolant	drain (20-010).
Feed and return hose	disconnect and flush remaining coolant out of heat exchanger with compressed air.
Instrument panel	remove (68-100).
Cover (1)	remove, 4 screws and 2 clips.
Clamp (2)	unhook.
Clamp (3)	unhook.
3 pipes (4) on heat exchanger	disconnect and pull out of heat exchanger.

Heat exchanger (5)	pull out toward top. Clean inside of housing and remove any leaked coolant.
Reinstall	in reverse order.
Sealing rings (6)	replace, 3 each.

Installation note
After recharging the cooling system with coolant check for leakage.

B. As of approx. 06/90

As of vehicle ident. no. Sindelfingen prod. 241 052
As of vehicle ident. no. Bremen prod. 146 557

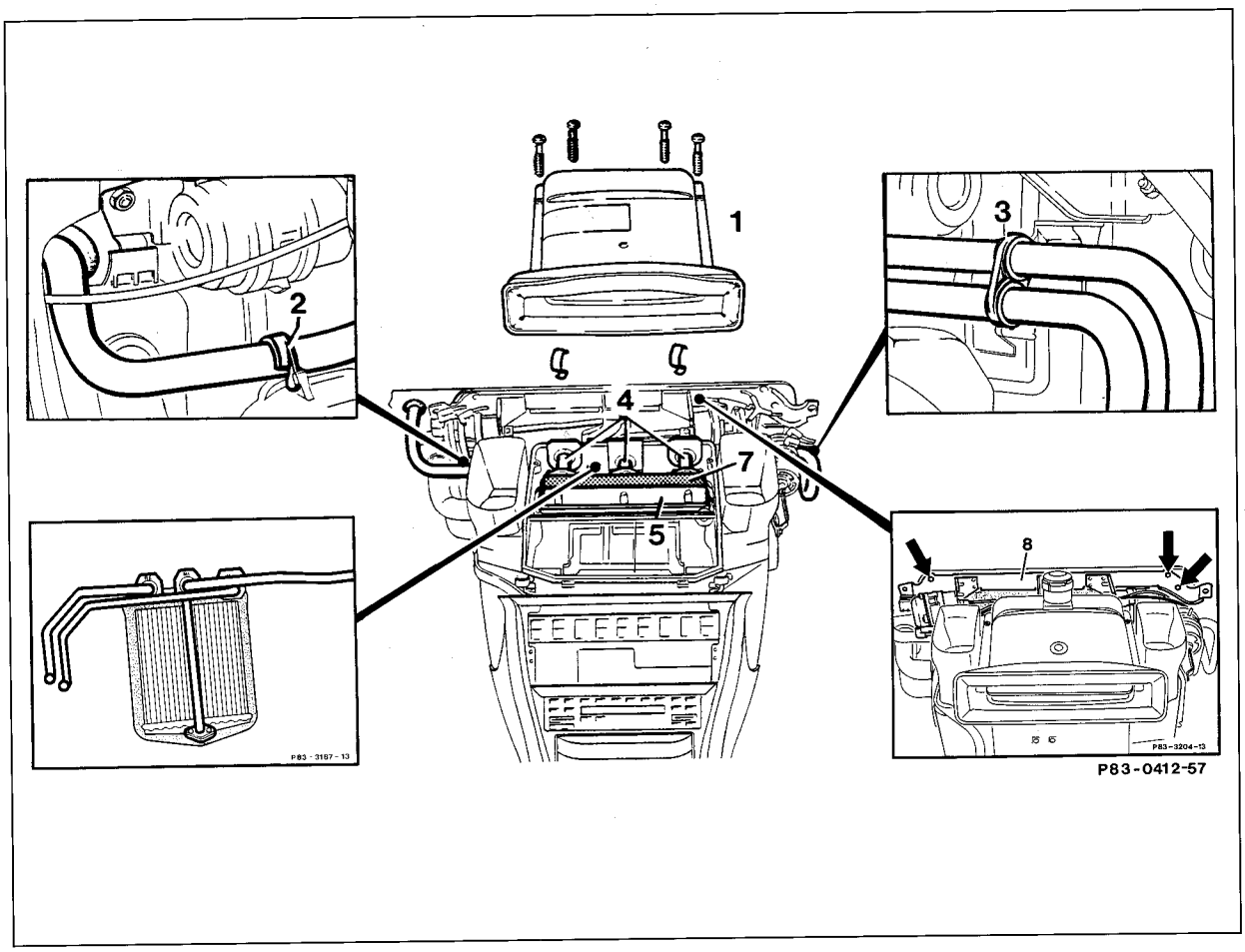

Battery	disconnect negative terminal.
Coolant	drain (20-010).
Feed and return hose	disconnect, and flush remaining coolant out of heat exchanger with compressed air.
Heater housing (air conditioner)	remove (83-100).
Support for vacuum elements (8)	unscrew (3 screws). Unclip control linkage for main air flap (arrow).

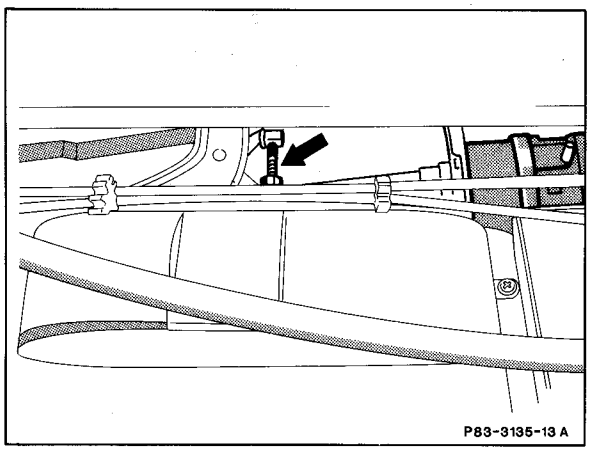

Cover (1)	remove, 4 screws and 2 clips.
Clip (2)	unclip.
Clip (3)	unclip.
Heat exchanger (5)	pull out toward top together with pipes (4). Clean inside of housing and remove any coolant which has escaped.
Three pipes (4) on heat exchanger	disconnect.
Re-install	in reverse sequence.
Sealing rings	replace (three).

Installation note

After recharging the coolant system with coolant, check for leakage.

83–525 Checking oil level in A/C compressor

Operation number of operation texts and work units or standard texts and flat rates

When working on the air conditioner, correct compressor oil level according to items 1 through 3, depending on the type of damage.

Oil capacity

Type of oil - compressor oil (approved compressor oils, see Specifications for Service Products, sheet no. 362)		
New oil capacity in A/C compressor	for R12 refrigerant	120 cm^3
	for R134a refrigerant	160 cm^3

⚠

Parts which have come into contact with compressor oil for R12 or R134a may only be installed in systems operating with the same refrigerant.

1. Following repair or slow refrigerant loss

Add refrigerant:

Up to 400 g (no leakage detectable)	Do not add compressor oil.
Completely recharge system due to leakage and replace fluid reservoir (drier)	20 cm^3 fresh oil.
Replace A/C compressor and fluid reservoir (drier). Drain oil from A/C compressor which has been removed and measure quantity. Also drain oil from new A/C compressor.	Fill new A/C compressor with same quantity as drained from A/C compressor which has been removed plus 10 cm^3 (for fluid reservoir) (oil drained from new compressor can be used).

Repair A/C compressor (e.g. front shaft seal) and fluid reservoir (drier). For this purpose drain refrigerant slowly (vacuum side)	Fill 20 cm^3 of fresh oil in compressor.

Checking and correcting oil level in A/C compressor

A/C compressor	Remove and reinstall (83-530).
If the A/C compressor is replaced	drain oil from removed A/C compressor while holding the A/C compressor with the pressure and vacuum opening pointing down and allow the oil to drain through the pressure and vacuum openings for approx.10 minutes. This process can be speeded up by turning the drive shaft (clutch) a number of times.
Allow oil to drain	out of new A/C compressor. Determine how much compressor oil has drained out of the original A/C compressor and pipeline. Fill new A/C compressor with the same quantity of fresh oil through the vacuum opening, plus 10 cm^3 for the new fluid reservoir. When repairing the A/C compressor (e.g. front shaft seal) replace fluid reservoir, and add a further 20 cm^3 of new compressor oil to the A/C compressor.

2. System suddenly empty (e.g. broken hose or accident)

Replace defective part and fluid reservoir as described in items 1 and 3, fill with specified quantity of oil	Add 40 cm^3 of compressor oil in addition.

Note

After evacuating the system (approx. 30 minutes) charge air-conditioner with approx. 200 g of refrigerant R12 or R134a and check for leakage.

Then extract refrigerant again (recycling) and re-evacuate (approx. 15 minutes). Then fill the system with the specified quantity of refrigerant and check air conditioner for leaks.

3. Replacing parts

Replacing compressor	20 cm^3 of new compressor oil
Replacing evaporator	40 cm^3 of new compressor oil
Replacing fluid reservoir	10 cm^3 of new compressor oil
Vacuum line from evaporator to compressor and pressure line from compressor to condenser	10 cm^3 of new compressor oil each

Operation number of operation texts and work units or standard texts and flat rates
83–0620

A. Engine 102

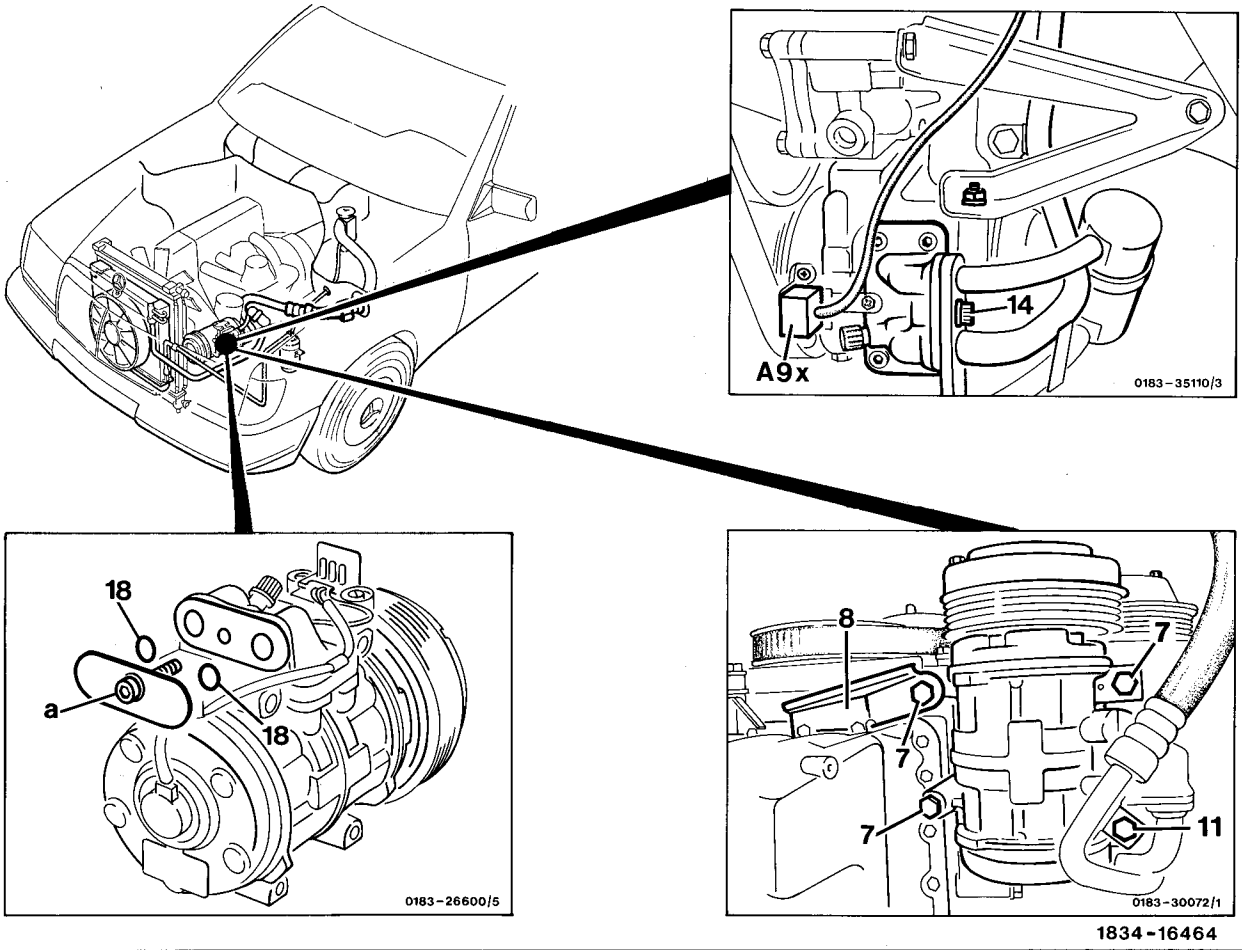

Air conditioner	empty (recycling).
Lower engine compartment panelling	remove.
Poly-V-belt	loosen and remove.
3 pole connector (A9x)	disconnect.
Screw (14)	screw out, tighten to 23 ± 2.3 Nm.
Mount (8)	remove/install.

Screws (7 and 11)	unscrew, tighten to 23 ± 2.3 Nm and remove A/C compressor downward.
Plug connections with dummy plate (a) part no. 601 131 00 21	before installing new compressor drain refrigerant slowly at service valve (arrow).
Correct oil level in A/C compressor	(83-525); fill new A/C compressors with 120 cm^3 of refrigeration oil (see Specifications for Service Products sheet no. 362 for approved refrigeration oils).
O-rings (18)	replace, if A/C compressor is not replaced.
Reinstall in reverse order	and observe the following: If the A/C compressor has been replaced due to internal damage (e.g. seizing or damage to the valve plates) the piping at the compressor and the expansion valve (83-552) must also be replaced. Moreover check the function and direction of rotation of the auxiliary fan (clockwise) via the 16 and 20 bar and 100 °C switches (83-560).
Fluid reservoir	replace (83-540).
Air conditioner	evacuate and recharge.
Air conditioner	Switch on and allow engine to idle for approx. 4 minutes.
Check air conditioner for proper function and leakage	(83-512); assure that the air outlet temperature at center nozzle is not below +5 °C, replace evaporator temperature sensor if required (83-546).

B. Engines 103 and 104

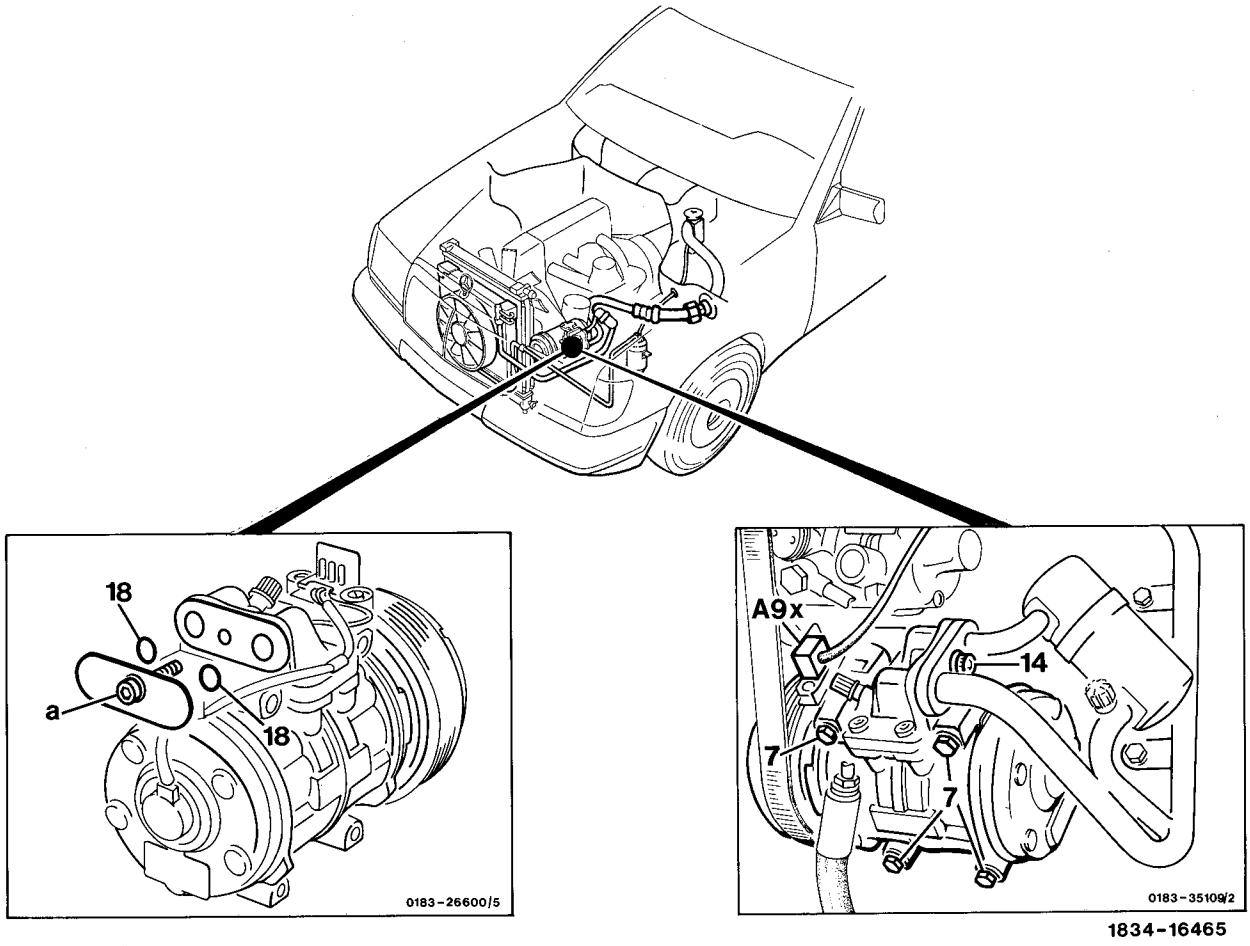

Air conditioner	drain (recycling).
Lower engine compartment panelling	remove.
Poly-V-belt	slackenand remove (13-342).
3-pin plug connection (A9x)	disconnect.
Screw (14)	screw out, tighten to 23 ± 2.3 Nm.
Screw (7)	screw out, tighten to 23 ± 2.3 Nm and remove A/C compressor downward.

Plug connections with dummy plate (a) part no. 601 131 00 21	before installing new compressor drain refrigerant slowly at service valve (arrow).
Correct oil level in A/C compressor	(83-525); fill new A/C compressors with 120 cm^3 of refrigeration oil (see Specifications for Service Products page no. 362 for approved refrigeration oils).
O-rings (18)	replace, if A/C compressor is not replaced.
Reinstall in reverse order	and observe the following: If the A/C compressor has been replaced due to internal damage (e.g. seizing or damage to the valve plates) the piping at the compressor and the expansion valve (83-552) must also be replaced. The operation and direction of rotation of the auxiliary fan (clockwise) is to be checked via the 16 or 20 bar switch and temperature sensor for automatic climate control (KLA/TAU) B11/7 or B10/8 (83-554).
Fluid reservoir	replace (83-540).
Air conditioner	evacuate and recharge.
Air conditioner	switch on and allow engine to idle for approx. 4 minutes.
Check air conditioner for proper function and leakage	(83-508); assure that the air outlet temperature at the center nozzle is not below +5 °C, replace evaporator temperature sensor if required (83-548).

⚠

Parts which have come into contact with compressor oil for R12 or R134a may only be installed in systems operating with the same refrigerant.

C. Engine 119

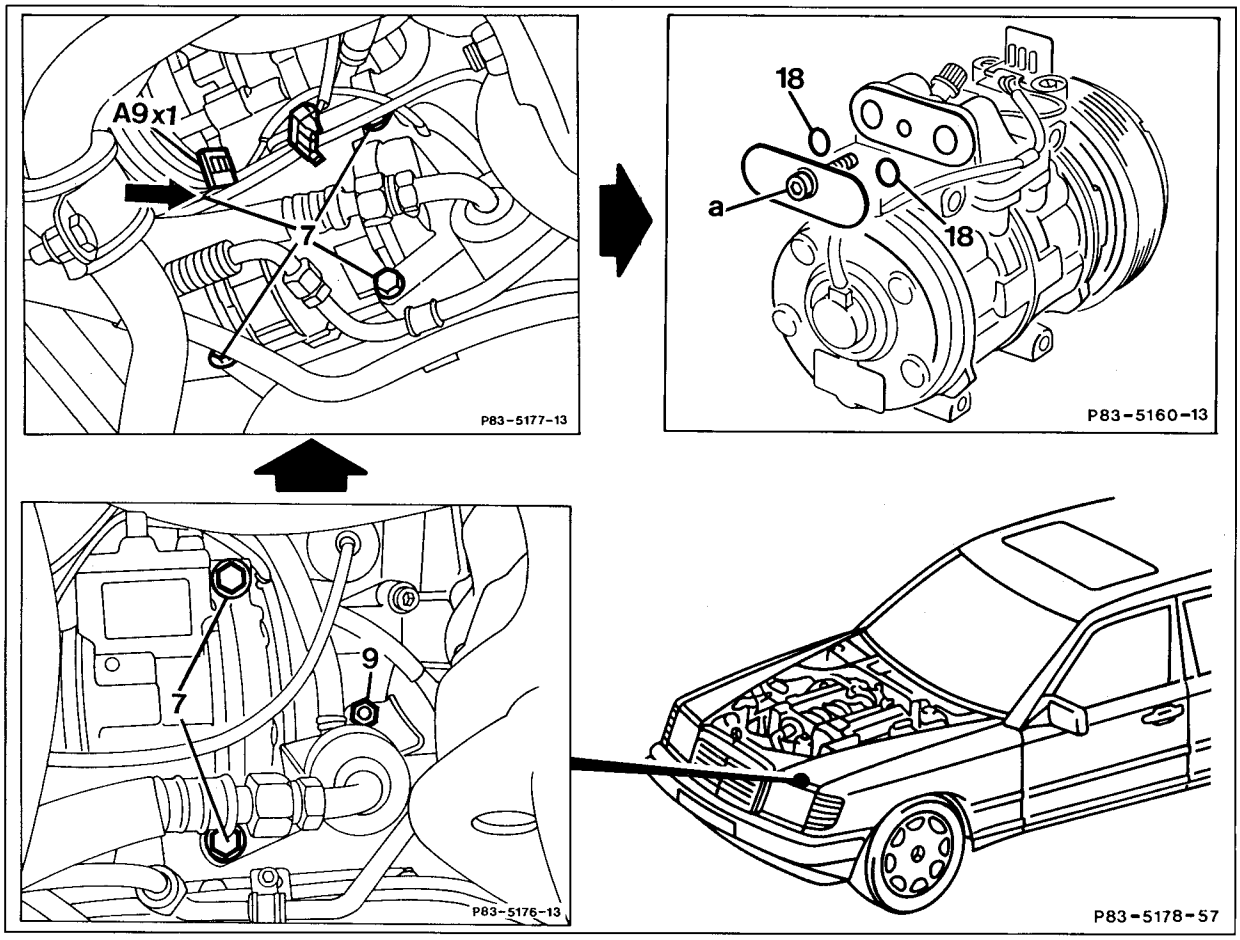

Air conditioner	empty (recycling).
Lower engine compartment lining	remove.
Poly-V-belt	release tension and remove (13-342).
Air supply pipe for the left engine bearing	remove (3 screws).
Left engine compartment lining	remove.
attachment points (A9x1)	disconnect.
Level line to pump and oil pan	remove.
Torsion bar at the front fixing	remove (2 clamps, 4 self-locking nuts).

⚠
Self-locking nuts and bolts are always to be rep,laced with new ones when removed.

Oil line for engine oil cooler	remove (2 screws).

Pipe group	remove from A/C compressor by unscrewing nut (9) and unscrewing bolt a and 1 bolt (7) on A/C compressor, tighten to 23 ± 2.3 Nm.
Bolts (7)	unscrew, tighten to 23 ± 2.3 Nm and remove A/C compressor downwards.
Connections with dummy plate (a) parts kit 140 830 01 27	seal. Before installing a new compressor, drain refrigerant at the service valve (arrow) slowly.
Oil level in A/C compressor	correct (83-525). New A/C compressors are to be filled with 120 cm^3 compressor oil or, in the case of A/C compressors for refrigerant R134a, with 160 cm^3 compressor oil (for approved compressor oils, see Specifications for Service Products, sheet no. 362)
O-rings (18)	replace, if A/C compressor has not been replaceed.
Re-install in reverse order	and observe the following: if the A/C compressor has been replaceed due to internal damage (e.g. freezing or damage to the valve plates) the piping at the compressor and the expansion valve (83-552) must also be replaceed. Moreover the operation and direction of rotation of the auxiliary fan (clockwise) is to be checked via the 16 or 20 bar switch and temperature sensor for automatic climate control (KLA/TAU) B11/7 or B10/8 (83-544). ⚠ Parts which have come into contact with compressor oil for R12 or R134a may only be installed in systems operating with the same refrigerant.
Fluid reservoir	replace (83-540).
Air conditioner	evacuate and refill.
Air conditioner	switch on and allow engine to run at idle for approx. 4 minutes.
Check air conditioner for function and leakage	(83-508) ensuring that the air outlet temperature at the center nozzles is not below +5°C, replace evaporator temperature sensor if required (83-546).

D. Engines 601, 602 and 603

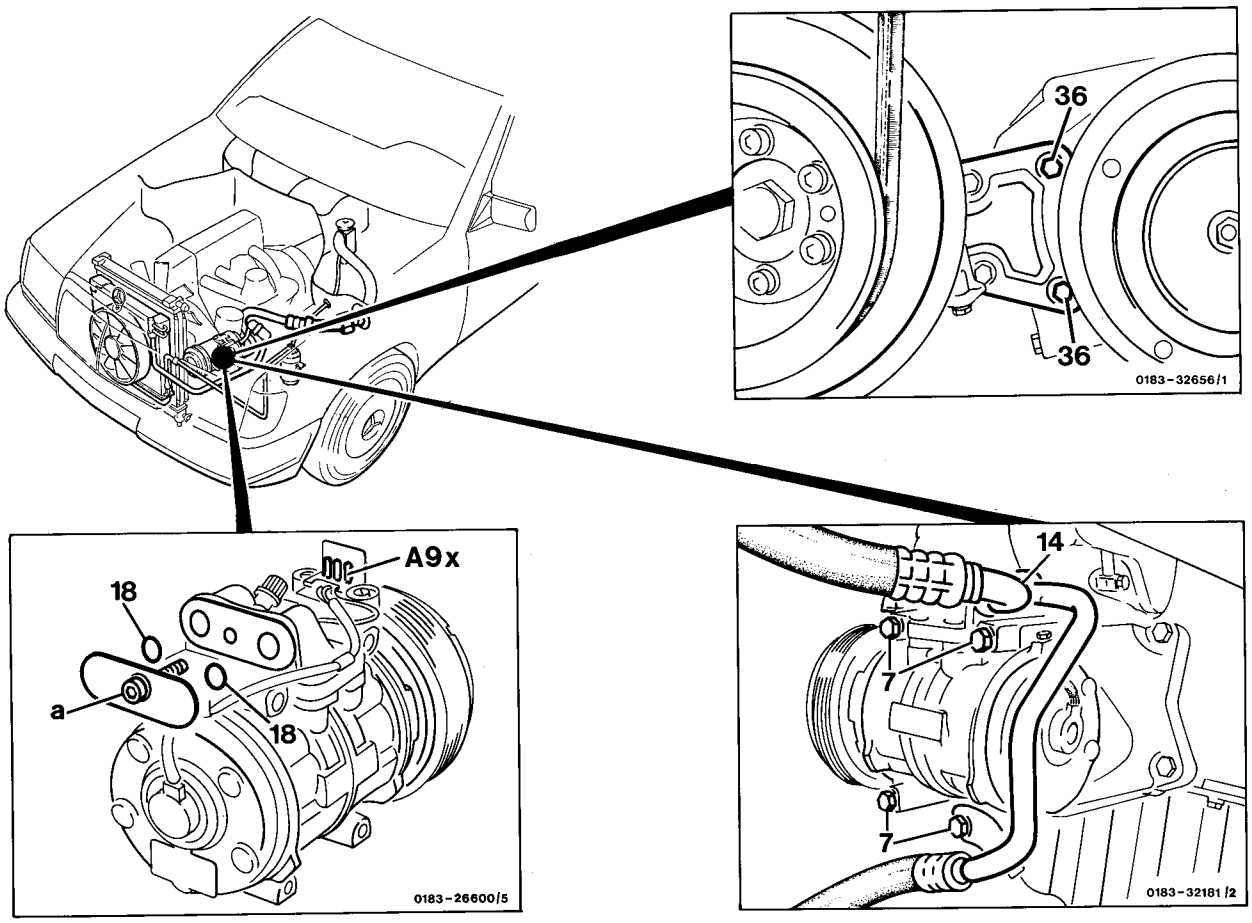

Air-conditioner	empty (recycling).
Acoustic capsule - bottom section	remove, install.
Poly-V-belt	loosen and remove.
3-pin plug connection (A9x)	disconnect.
Screw (14)	unscrew, tighten to 23 ± 2.3 Nm.
On vehicles with engine 601, both screws (36)	unscrew, tighten to 23 ± 2.3 Nm.
Screw (7)	unscrew, tighten to 23 ± 2.3 Nm and remove A/C compressor downward.

⚠

Parts which have come into contact with compressor oil for R12 or R134a may only be installed in systems operating with the same refrigerant.

Plug connections with dummy plate (a) part No. 601 131 00 21	before installing new compressor drain refrigerant slowly at service valve (arrow).
Correct oil level in A/C compressor	(83-525); fill new A/C compressors with 120 cm^3 of cold flowing oil (see specifications for Service Products sheet no. 362 for approved cold flowing oils).
O-rings (18)	replace, if A/C compressor is not replaced.
Reinstall in reverse order	and observe the following: If the A/C compressor has been replaced due to internal damage (e.g. seizing or damage to the valve plates) the piping at the compressor and the expansion valve (83-552) must also be replaced. Moreover the function and direction of rotation of the auxiliary fan (clockwise) is to be checked via the 16 and 20 bar switch and temperature sensor for automatic climate control (KLA/TAU) B11/7 or B10/8 (83-544).
Fluid reservoir	replace (83-540).
Air-conditioner	evacuate and recharge.
Air-conditioner	switch on and allow engine to run at idle for approx. 4 minutes.
Check air-conditioner for proper function and leakage	(83-508); assure that the air outlet temperature at center nozzle is not below +5 °C, replace evaporator temperature sensor if required (83-546).

83-532 Removal and installation of speed sensor on A/C compressor

Operation no. and oeration texts and work units or standard texts and flat rates 83-0643

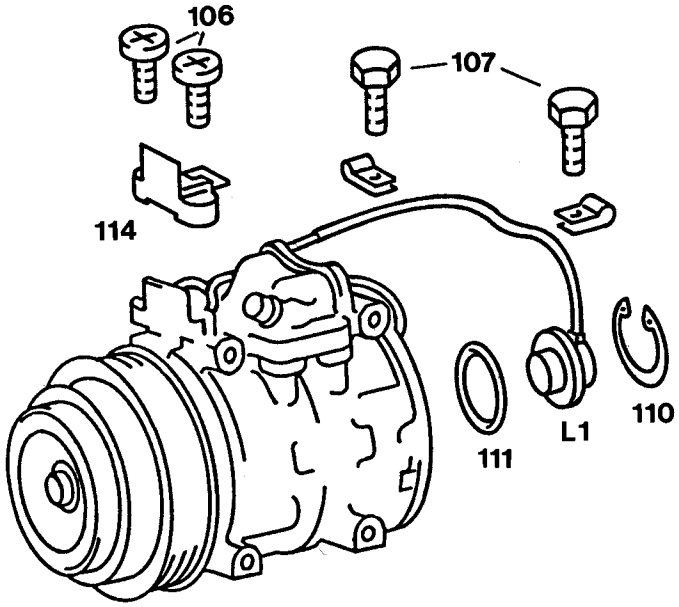

A/C compressor	remove/install (83-530).
Screws (106 and 107)	unscrew, screw in.
Connector housing (114)	open and disconnect/reconnect both connector pins for speed sensor.
Snap ring (110)	remove/install.
Speed sensor (L1)	pull out/install. Replace O-ring (111) and coat with refrigeration oil.
Allow refrigerant to flow into A/C compressor at service valve (arrow)	and check A/C compressor for leakage with leak detector.
Air-conditioner	evacuate, charge and check for proper function and leakage (83-508).

83-534 Replacing shaft seal on A/C compressor

Operation no. and operation texts and work units or standard texts and flat rates 83-0662

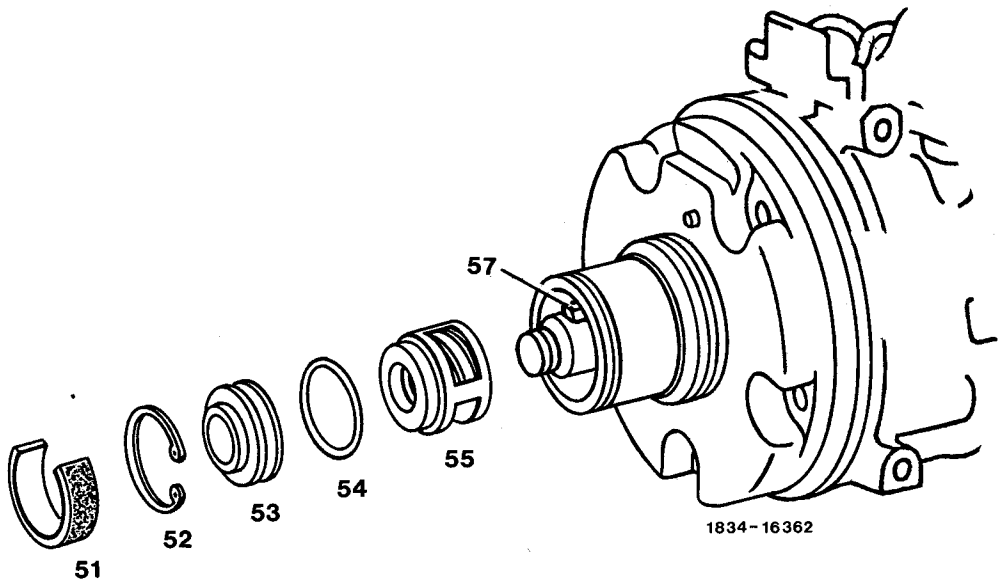

A/C compressor	remove/install (83-530).
Spring plate	remove/install (83-536).
Dust seal (51)	press out with screwdriver/install.
Key (57)	remove with key puller 126 589 07 33 00 and install with key installation tool 126 589 01 35 00.
Snap ring (52)	remove/install with snap ring pliers (inside).
Sealing plate (53)	remove/install with installation tool 126 589 01 59 00.
O-ring (54)	remove/install.
Shaft seal (55)	pull out/install with installation tool 126 589 02 59 00.

Special tools

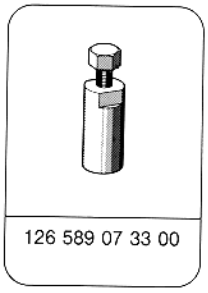
126 589 07 33 00

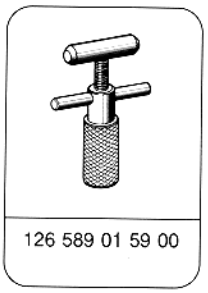
126 589 01 59 00

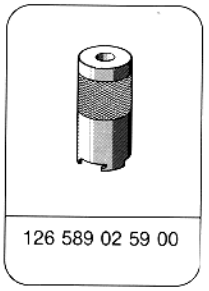
126 589 02 59 00

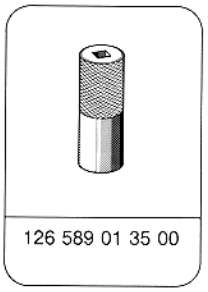
126 589 01 35 00

Removal/installation

1 Drain air conditioner.

2 Remove A/C compressor (83-530).

3 Remove spring plate (83-536).

4 Press dust seal (arrows) out with screwdriver.

Installation note
Install dust seal so that open side points upward.

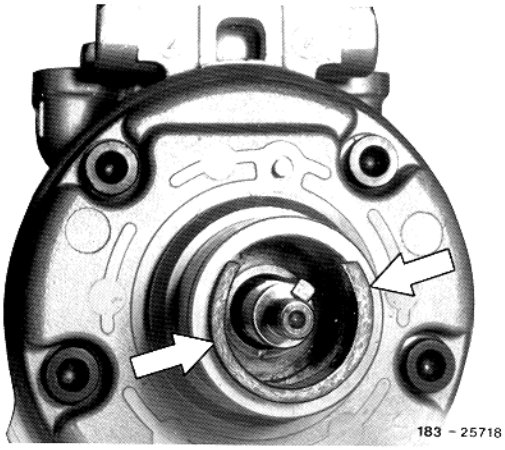
183 - 25718

5 Position key puller on compressor shaft and turn one half turn to right.

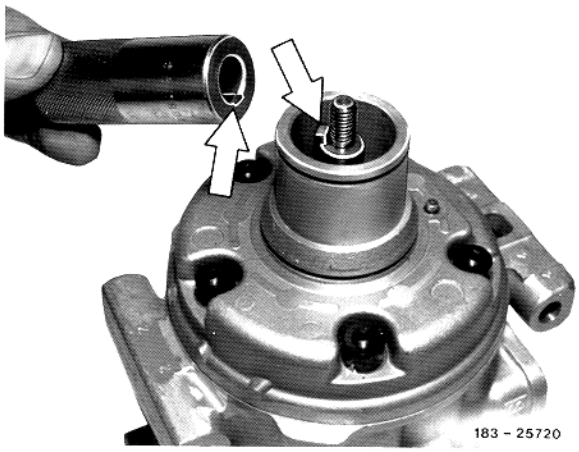
183 - 25720

6 Pull out key and remove.

7 Remove snap ring (52).

Installation note
Reinstall key with key installation tool 126 589 01 35 00.
The conical surface of the snap ring must point toward the front.

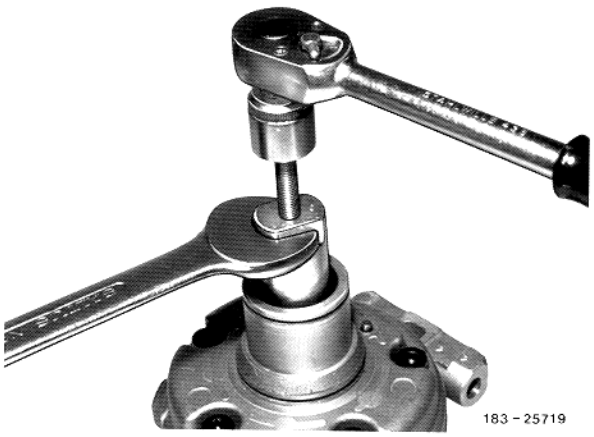
183 - 25719

53412

8 Insert installation tool for sealing plate and retaining ring (arrow) up to mark and press downward.
Pull out sealing plate (53) and remove from tool.

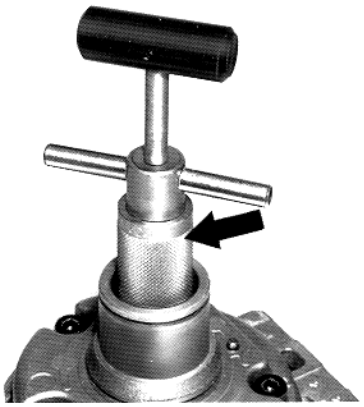
183-25851

Installation note
Ensure that sealing plate is installed in proper position and coat O-ring (arrow) with refrigeration oil.

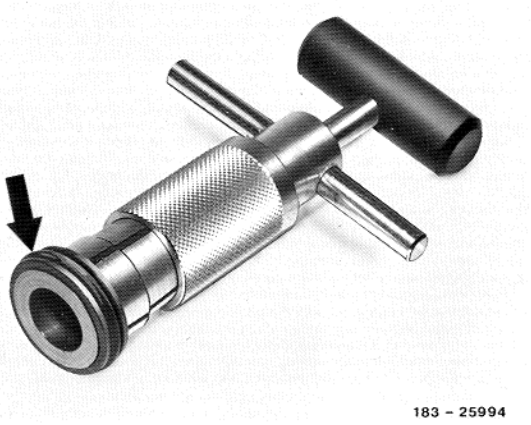
183 - 25994

9 Insert installation tool for shaft seal, press in, turn to right and pull out shaft seal.

Installation note
Fasten new shaft seal in installation tool and coat with refrigeration oil. After inserting the shaft seal unhook installation tool by turning to left.

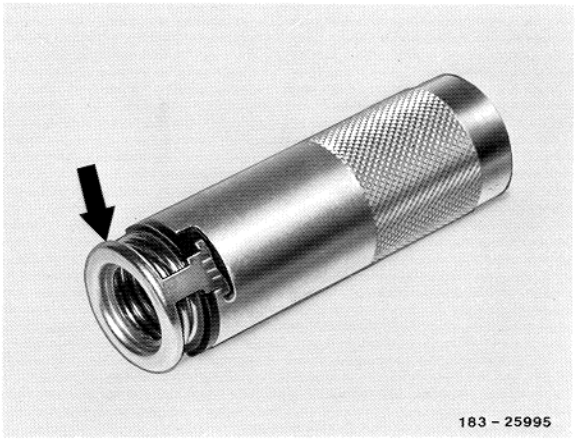
183 - 25995

Caution

The crankshaft seal on the clutch side of the A/C compressor is only supplied as a complete unit and must also be installed as such. Never install old and new parts together. Newly installed shaft seal sets should not be removed again immediately because of a slight leak. The carbon ring is lapped together with the inside of the sealing plate. This fit improves after the shaft seal has been run in.

10 Reinstall in reverse order.

11 Install spring plate (83-536).

12 Allow refrigerant vapor to flow into A/C compressor at service valve (arrow). A bottle or charging cylinder pressure of more than 4 bar is required.

13 Turn compressor shaft a number of times manually in the normal direction of rotation with the A/C compressor in the installed position.

14 Test A/C compressor for leakage with leak detector.

15 Close valve on service unit or charging cylinder and remove hose from service valve.

16 Install A/C compressor (83-530).

17 Replace fluid reservoir (83-540).

18 Correct oil level (83-525), adding 10 cm^3 of fresh oil to the compressor in addition.

19 Evacuate air-conditioning system and recharge; check for proper function (83-508).

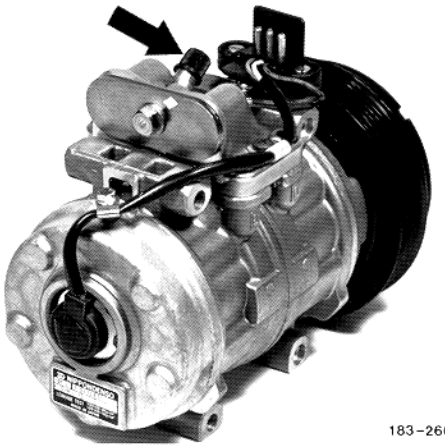

183-26600/1

83–536 Removal and installation of electromagnetic clutch, removal, installation and checking of solenoid coil

Operation no. of operation texts and work units, standard texts and flat rates:

A. A/C compressor 10P15

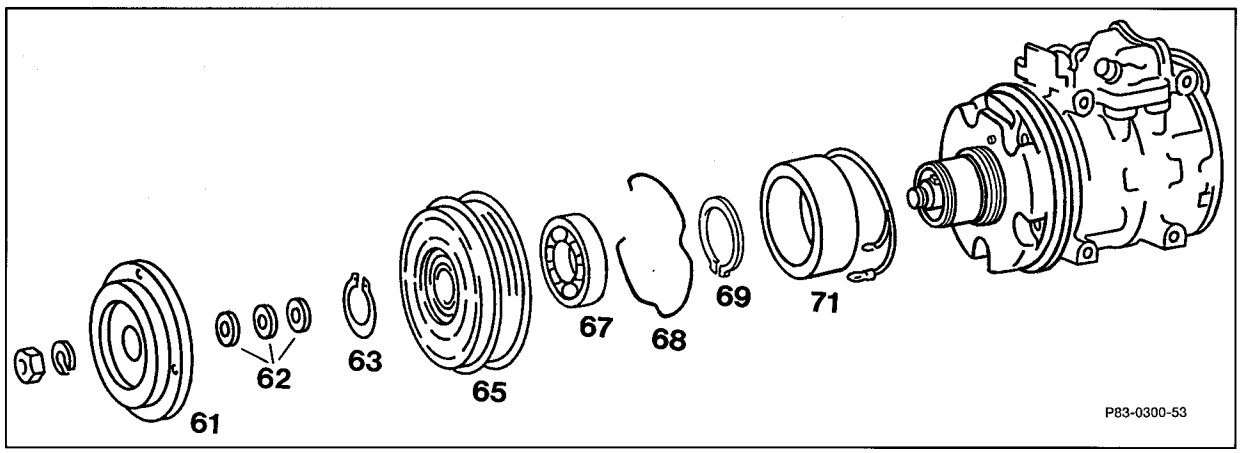

Fan and fan cowl	remove/install.
Poly-V-belt	remove/install (13-342).
Spring plate (61)	remove with pin wrench 000 589 00 05 00 and puller 126 589 06 33 00, check gap: 0.5 ± 0.15, correct with shims (62). Tighten to 16 ± 1.0 Nm.
Snap ring (63)	remove, install with snap ring pliers (outside).
V-belt pulley (65)	knock on/off with plastic hammer, clean friction surface.
Roller bearing (67)	replace if required, removing and installing snap ring (68) and pressing out/in with special tool 126 589 06 43 00.
Snap ring (69)	remove, install.
Solenoid coil (71)	remove, install, opening, closing, and checking plug housing on A/C compressor. Specification approx. hot 3.75 A, approx. cold 4.20 A.

Special tools

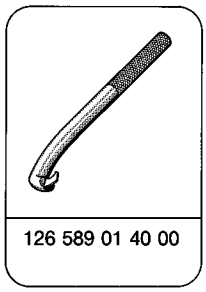

126 589 01 40 00

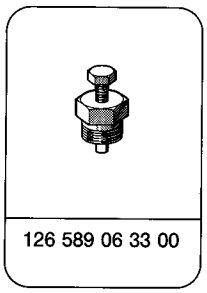

126 589 06 33 00

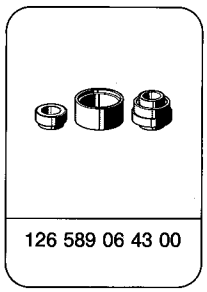

126 589 06 43 00

Self-made tool

Bearing mandril (rotating part), not required for installation with toggle press.

Removal and installation of spring plate

Removal

1 Remove fan and fan cowl.

2 Release tension on poly-V-belt and remove.

3 Hold spring plate with pin wrench and loosen nut.

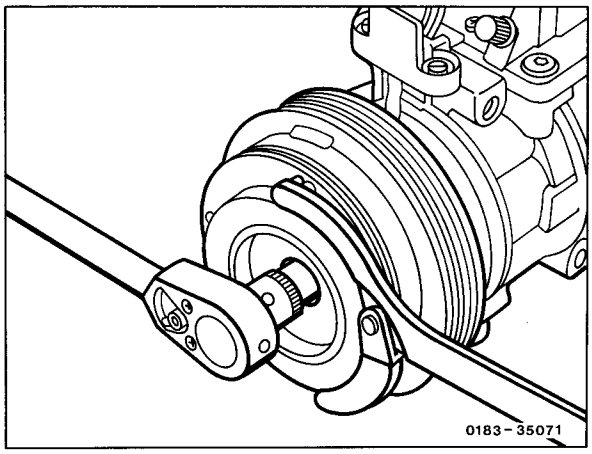

4 Screw puller into spring plate and pull spring plate.

Installation

5 Mount spring plate on compressor shaft.

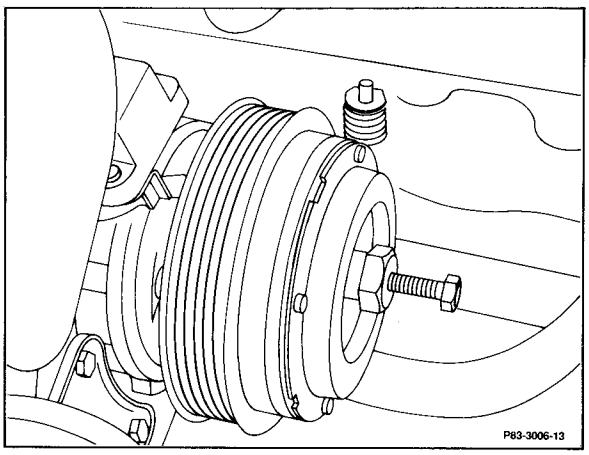

6 Check gap with valve gauge and correct with shims if required.

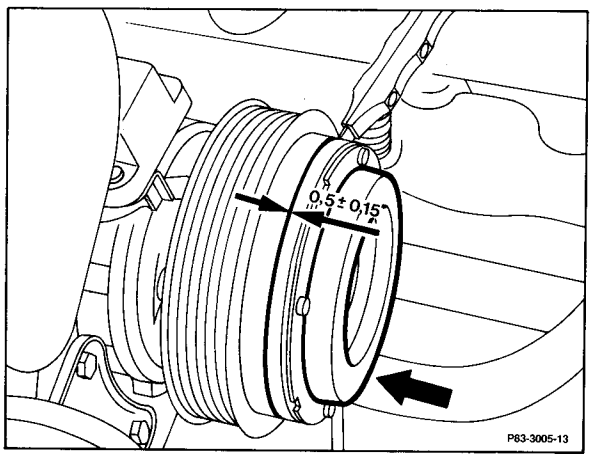

7 Install poly-V-belt and tension.

8 Install fan cowl and fan.

9 Check air-conditioner for proper function (83-508).

Removal and installation of V-belt pulley

Removal

1 Remove spring plate.

2 Remove snap ring for V-belt pulley (arrow) and knock off V-belt pulley with plastic hammer.

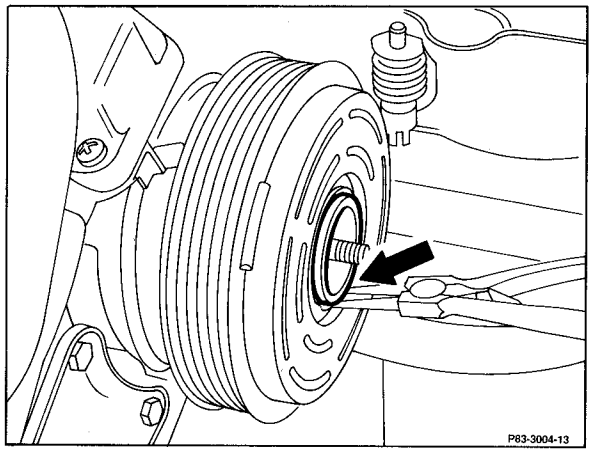

3 Replace bearing if required. Remove retaining ring from bearing (arrow).

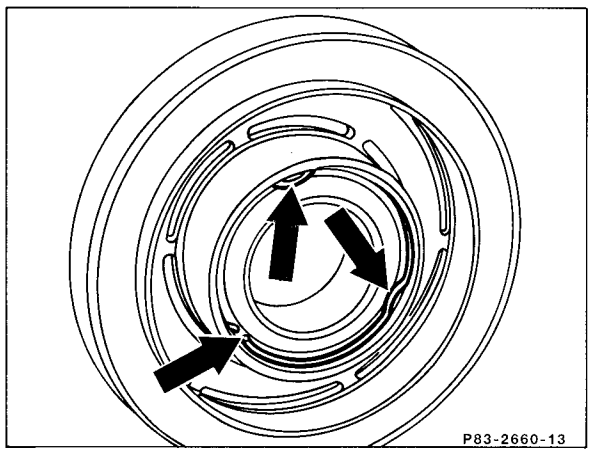

4 Press out bearing with special tool (arrow).

5 Press in new bearing with special tools.

6 Install in reverse order

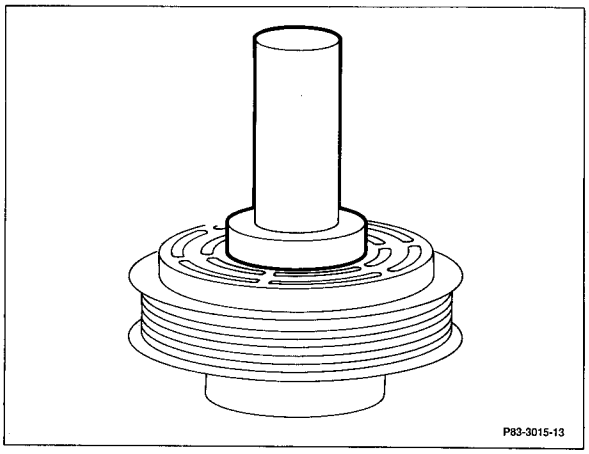

⚠
If the same pulley is reinstalled, clean the friction surface on the pulley. If the friction surface is damaged (e.g. due to overheating), replace pulley together with spring plate.

7 Check airconditioner for proper function (83-507).

Removal and installation of solenoid coil

Data

Specification approx.	hot	3.75 A
	cold	4.20 A

Removal

1 On vehicles with 6-cylinder engines remove A/C compressor (83-530).

2 Remove spring plate and V-belt pulley.

3 Pull plug on A/C compressor.

4 Unscrew both screws (arrow) on plug housing, open plug housing and remove lead (blue).

5 Disconnect ground cable for magnetic coil from A/C compressor.

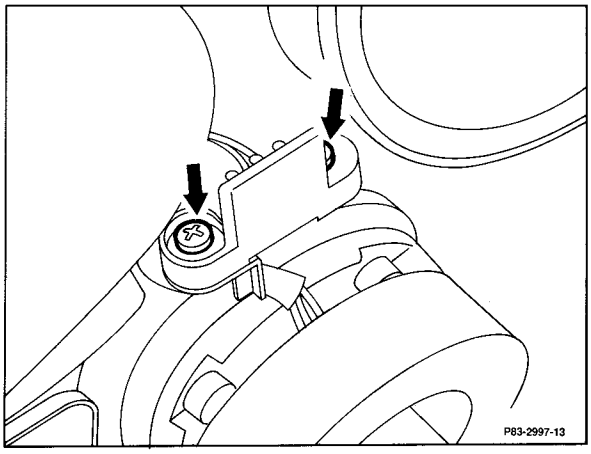

6 Remove snap ring on magnetic coil and remove coil.

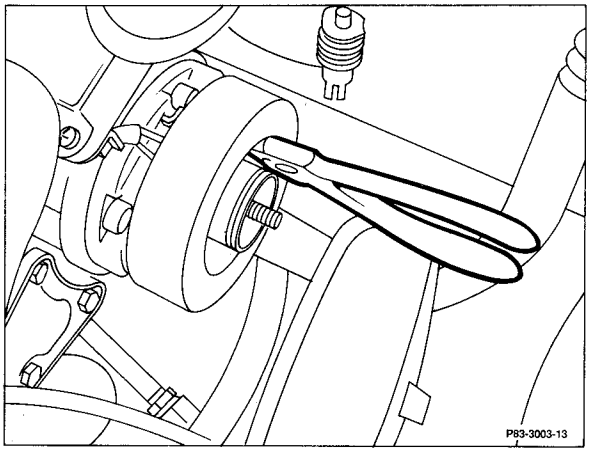

7 Reinstall in reverse order.

⚠
The solenoid coil must be positioned on the locating pin and the conical surface of the snap ring must point toward the outside.

8 On vehicles with 6-cylinder engine reinstall A/C compressor (83-507).

9 Check airconditioner for proper function (83-507).

B. A/C compressor 10PA15 and 10PA17

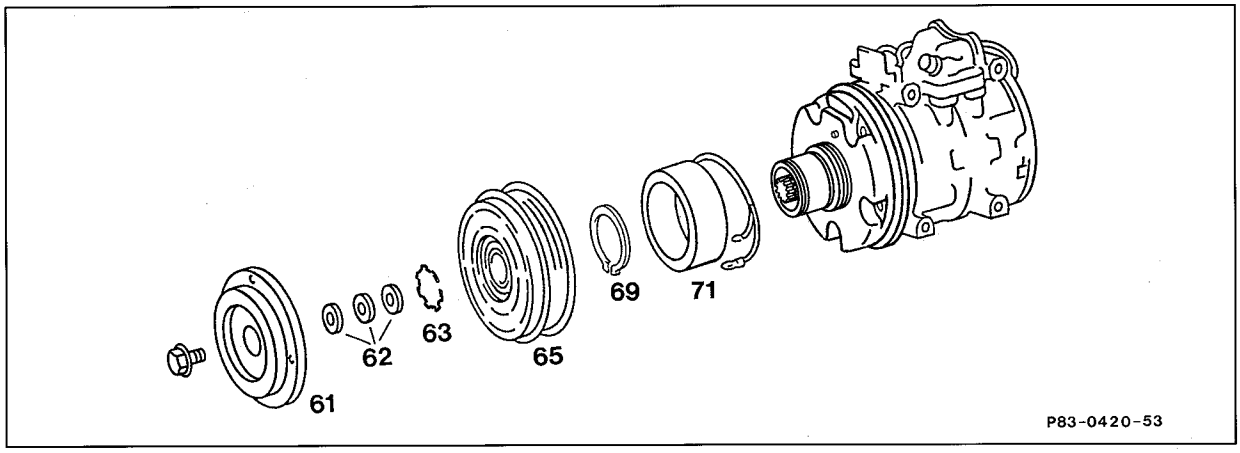

Fan and fan hub	remove, install.
V-belt	remove, install (13-342).

Spring plate (61)	remove using pin wrench 000 589 00 05 00 and puller 126 589 06 33 00. Check clearance dimension 0.5 ± 0.15, correct with shims (62). Tighten to 16 ± 1.0 Nm.
Snap ring	remove, install with snap ring pliers (outside).
V-belt pulley (65)	knock off/on with plastic hammer.
	⚠ If the same pulley is reinstalled, clean the friction surface on the pulley. If the friction surface is damaged (e.g. due to overheating), replace pulley together with spring plate.
Snap ring (69)	remove, install.
Solenoid coil (71)	remove, install, opening/closing plug housing on A/C compressor. Disconnect negative cable of solenoid coil from A/C compressor.
	⚠ The solenoid coil must be positioned on the locating pin and the conical surface of the snap ring must point outwards.
Solenoid coil	check. Nominal value approx. hot 3,75 A cold 4,20 A
Air conditioner	check operation.

Special tool

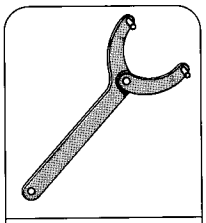

000 589 00 05 00
42 46

Removal and installation of spring plate

Removal

1 Remove fan and fan hub.

2 Release tension on V-belt and remove.

3 Using the pin wrench, hold spring plate and slacken screw.

4 Remove spring plate.

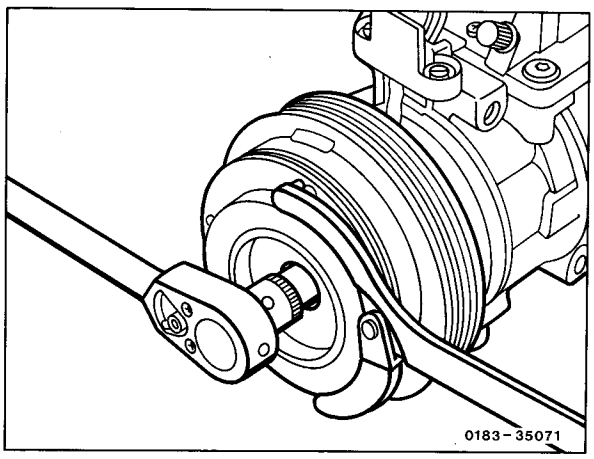

Installation

5 Mount spring plate on compressor shaft and tighten nut to 16 ± 1.0 Nm.

6 Check clearance dimension with valve gauge or correct with spacer.

7 Fit V-belt and tension.

8 Install fan hub and fan.

9 Check operation of air conditioner (83-508).

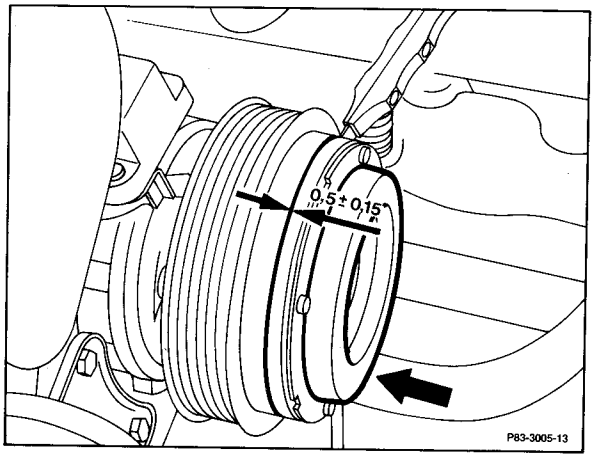

Removal and installation of V-belt pulley

Removal

1 Remove spring plate.

2 Remove snap ring from V-belt pulley (arrow) and knock V-belt pulley downwards with plastic hammer.

3 Install in reverse sequence.

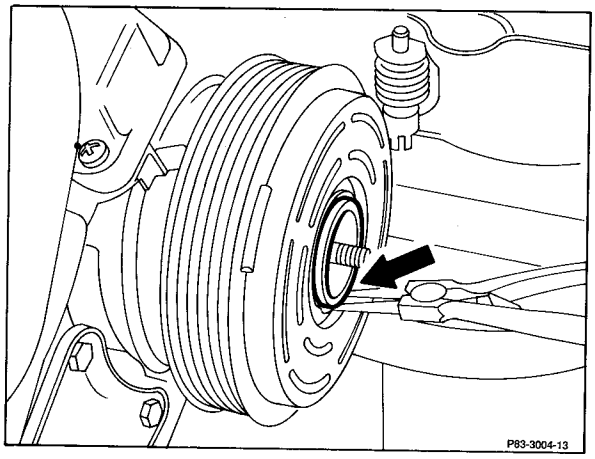

⚠

If the same pulley is reinstalled, clean the friction surface on the pulley. If the friction surface is damaged (e.g. due to overheating), replace pulley together with spring plate.

Removal and installation of solenoid coil

Data

Specification approx.	hot	3.75 A
	cold	4.20 A

Removal

1 On vehicles with 6-cylinder engines, remove A/C compressor (83-530).

2 Remove spring plate and V-belt pulley.

3 Detach plug from A/C compressor.

4 Unscrew both screws (arrows) from plug housing, open plug housing and remove line (blue).

5 Disconnect ground cable of solenoid coil from A/C compressor.

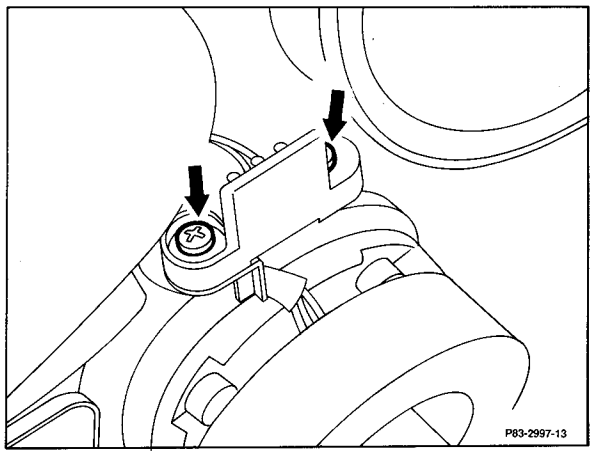

6 Remove snap ring from solenoid coil and remove coil.

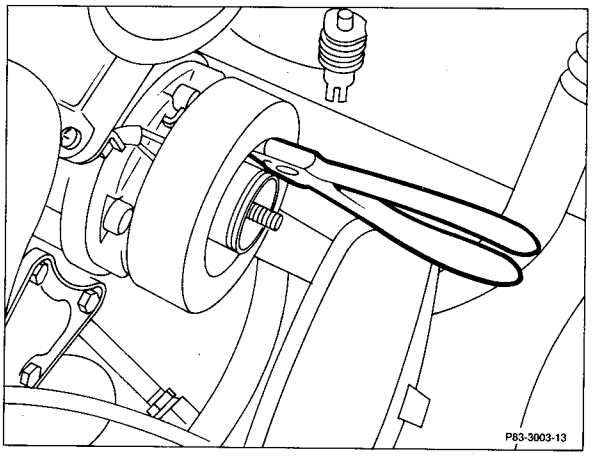

7 Install in reverse sequence.

⚠
The solenoid coil must be positioned on the locating pin and the conical surface of the snap ring must point outwards.

8 On vehicles with 6-cylinder engines, remove A/C compressor (83-530).

9 Check operation of air conditioner (83-507)

83–537 Removal and installation of series resistor for auxiliary fan

Operation no. of operation texts and work units, standard texts and flat rates:
83–0620

A. All models 124 except models 124.034/036

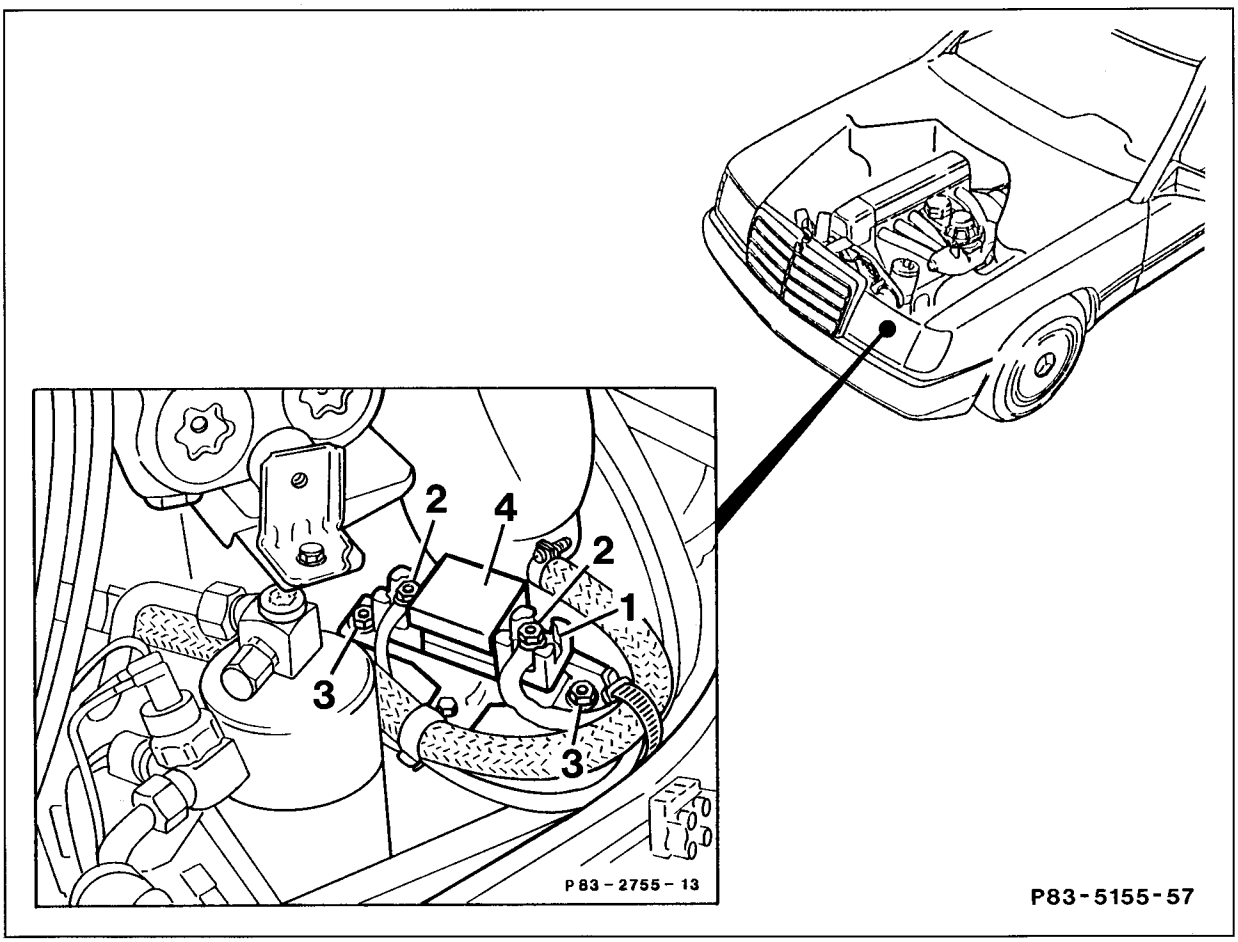

Fraont left headlamp	remove (82-052).
Nuts (2)	slacken and remove connection cable from series resistor (1).
Nuts (3)	slacken.
Series resistor (1)	remove together with cover (4).
Install	in reverse sequence.
Function check	perform, by detaching and bridging plug on coolant temperature sensor or on the pressure switch for auxiliary fan, with ignition on.

B. Models 124.034/036

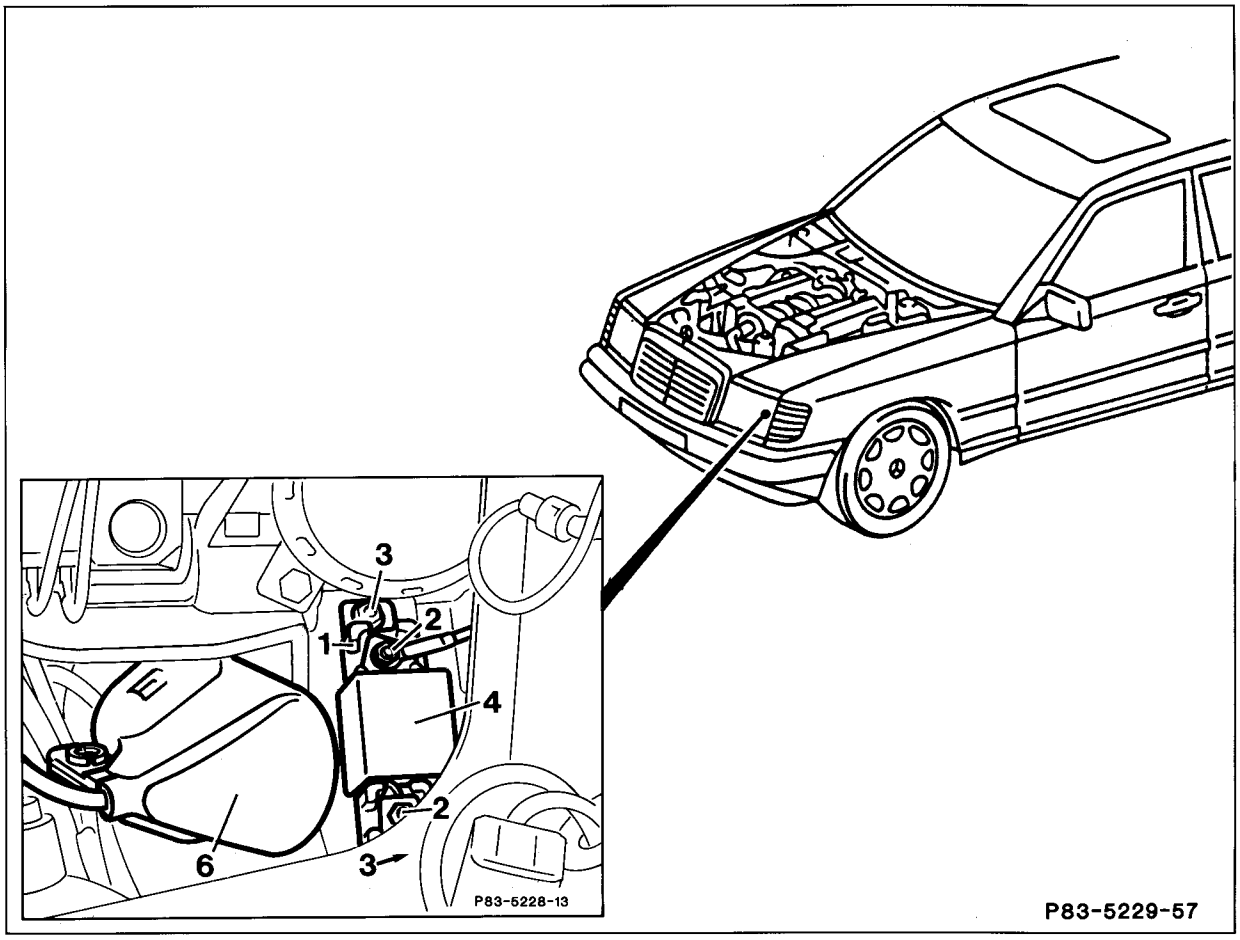

Cover for ignition coil (left-hand cylinder bank (6))	remove.
Nuts (2)	unscrew and remove connection cable on series resistor (1).
Nuts (3)	unscrew.
Series resistor (1) with cover (4)	remove.
Install	in reverse sequence.
Function check	perform, detaching and bridging plug on coolant temperature sensor or on the pressure switch for auxiliary fan, with ignition on.

83–538 Removal and installation of condenser

Operation no. of operation texts and work units or standard texts and flat rates
83–0730

A. Engine 102 up to 12/88, engine 103 up to 08/89

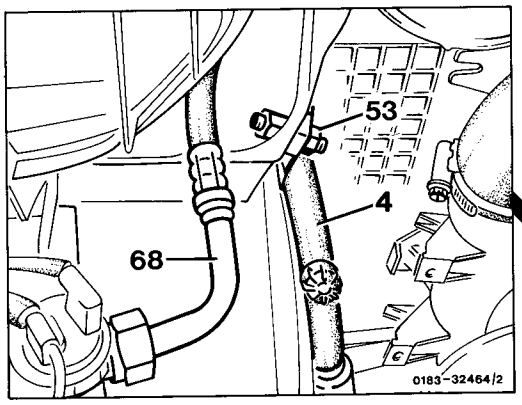

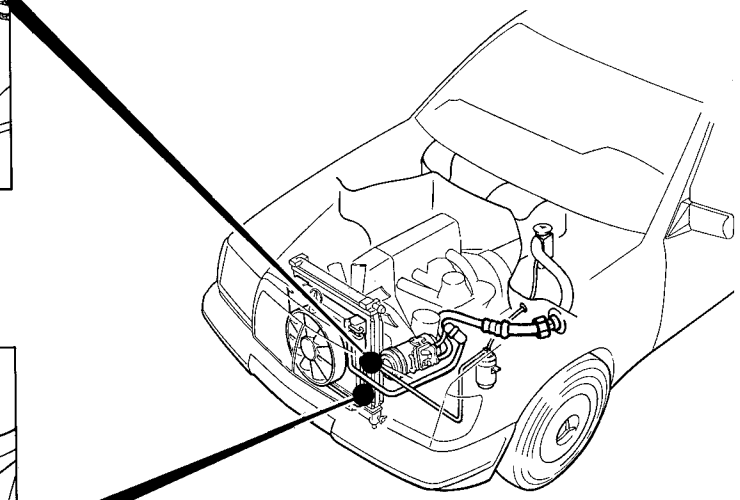

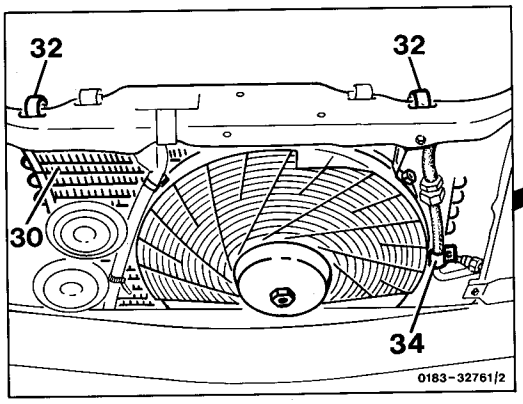

Air conditioner	empty (recycling).
Radiator	remove, install (20-420).
Nut (53)	unscrew.
Pipeline (4) and hoseline (68) on condenser	remove.
Clip (34)	slacken.
Both clamps (32)	unclip and remove condenser upwards.
Removal and installation of auxiliary fan	see operation no. 83-560.

Reinstall in reverse order	moisten connection thread with compressor oil.
Fluid reservoir	replace (83-540).
Air conditioner	evacuate, recharge, check for proper function and leakage (83-508), allow engine to idle only in the first 4 minutes.

Tightening torques (Nm)

Pipeline (4) on condenser	29–37
Hoseline (68) on condenser	15–18

Note

If the condenser is not reinstalled immediately, blow out condenser with nitrogen. Then plug connections with plugs. When replacing condenser, fill with 20 cm^3 of compressor oil.

⚠

Parts which have come into contact with compressor oil for R12 or R134a may only be installed in systems operating with the same refrigerant.

B. Engine 102 as of 01/89

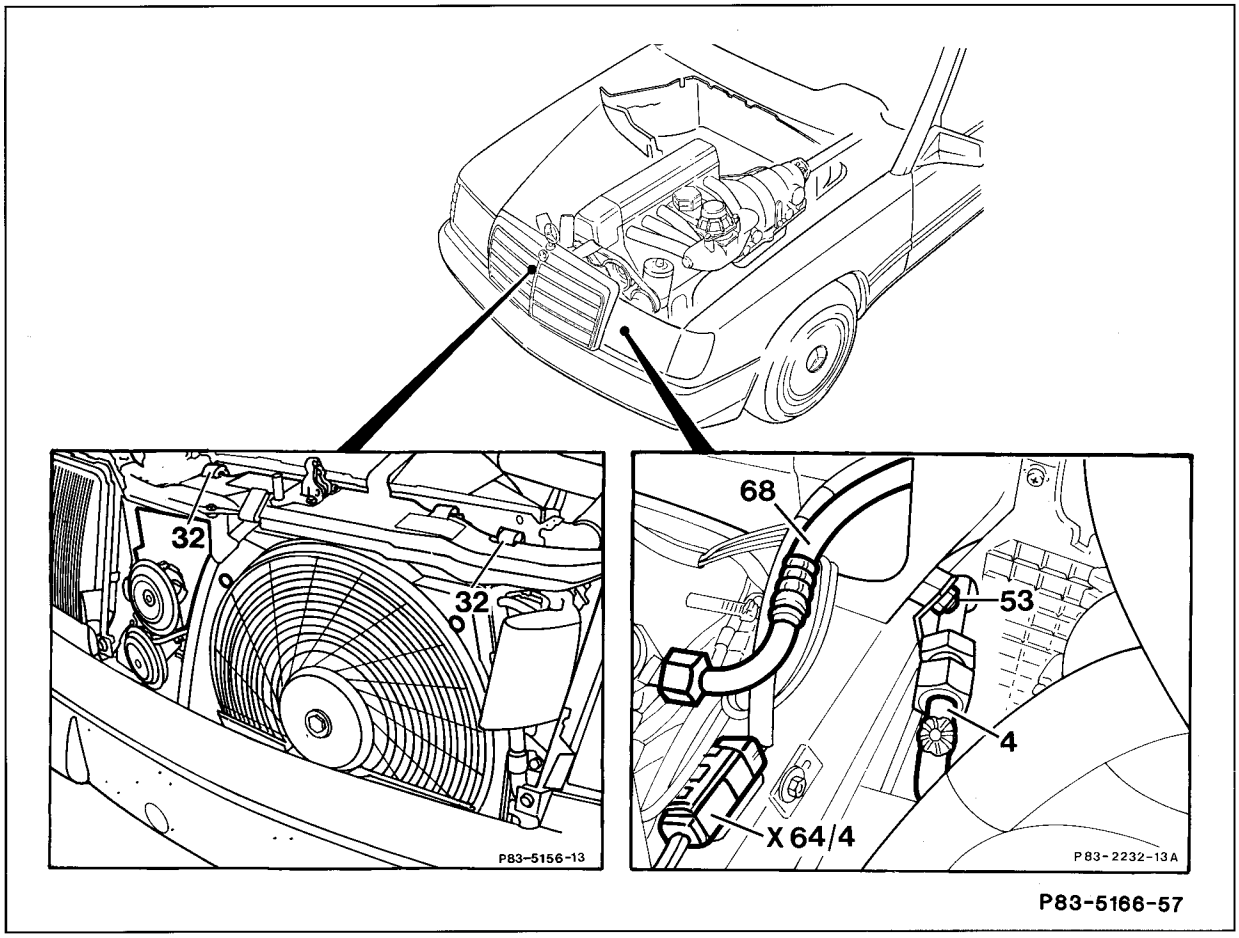

Air conditioner	empty (recycling).
Radiator	remove, install (20-420).
Nut (53)	unscrew.
2-pole plug connection (X64/4)	detach.
Pipeline (4) and hoseline (68) on condenser	remove.
Both clips (32)	unclip and remove condenser upwards.
Removal and installation of auxiliary fan	see operation no. 83-560.
Install in reverse sequence	lubricate connection thread with compressor oil.
Fluid reservoir	renew (83-540).
Air conditioner	evacuate, fill, check operation and for leakage (83-508), allowing the engine to idle only in the first 4 minutes.

Tightening torques (Nm)	
Pipeline (4) on condenser	29–37
Hoseline (68) on condenser	15–18

Note

If the condenser is not reinstalled immediately, blow out condenser with nitrogen. Then seal connections with plugs. When replacing condenser, fill with 20 cm^3 of compressor oil.

⚠

Parts which have come into contact with compressor oil for R12 or R134a may only be installed in systems operating with the same refrigerant.

C. Engine 103 as of 09/89, 104 and 119

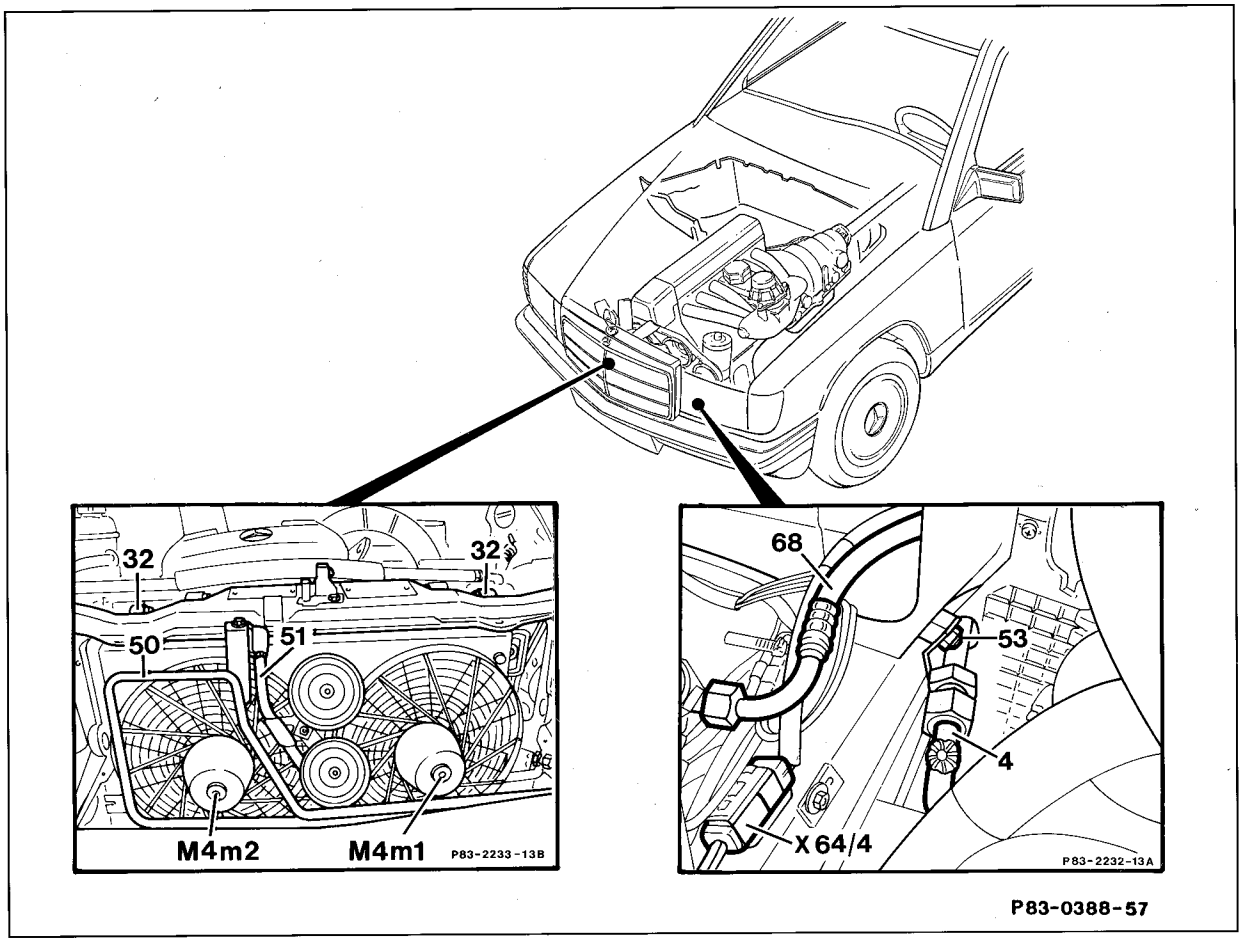

Air conditioner	empty (recycling).
Radiator	remove, install (20-420).
Nut (53)	unscrew.
2-pole plug connection (X64/4)	detach.
Pipeline (4) and hoseline (68) on condenser	remove.
Both clips (32)	unclip and remove condenser upwards.
Removal and installation of auxiliary fan	see operation no. 83-560.
Install in reverse sequence	lubricate connection thread with compressor oil.
Fluid reservoir	renew (83-540).
Air conditioner	evacuate, fill, check operation and for leakage (83-508), allowing the engine to idle only in the first 4 minutes.

Tightening torques (Nm)	
Pipeline (4) on condenser	29–37
Hoseline (68) on condenser	15–18

Note

If the condenser is not reinstalled immediately, blow out condenser with nitrogen. Then seal connections with plugs.
When replacing condenser, fill with 20 cm^3 of compressor oil.

⚠

Parts which have come into contact with compressor oil for R12 or R134a may only be installed in systems operating with the same refrigerant.

83–540 Removal and installation of fluid reservoir

Operation no. of operation texts and work units or standard texts and flat rates
83–0740

A. All models 124 except models 124.034/036

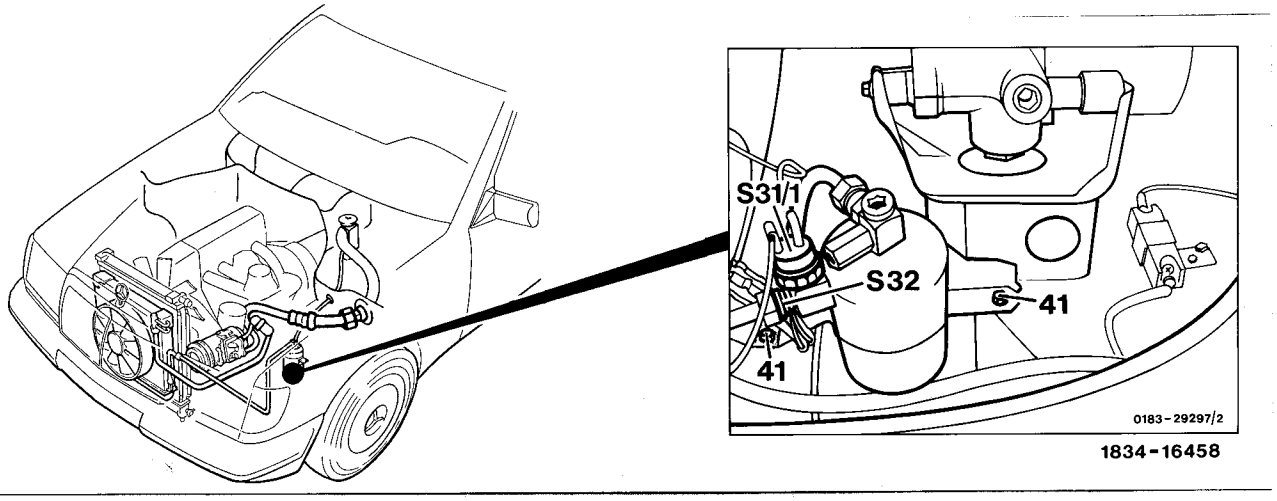

Air-conditioner	empty (recycling).
Plug from pressure switches (S31 and S32)	disconnect.
Both pressure switches	screw off.
Lines on fluid reservoir	disconnect/connect and tighten to 15-18 Nm.
Both screws (41)	unscrewand remove fluid reservoir.
Reinstall in reverse order	install, lubricating the thread for the hose with compressor oil. If the fluid reservoir has been replaced, fill the new fluid reservoir with approx. 10 cm^3 compressor oil.
Air-conditioner	evacuate, recharge, check for leakage and proper function (83-508), allow engine to run at idle speed only for first 4 minutes.

Note

In the event of airconditioner malfunctions resulting from leakage, contamination or icing up always install a new fluid reservoir when the A/C compressor is repaired or replaced.

Data

Version	Steel housing for R12 refrigerant, aluminum housing for R134a refrigerant, with sight glass
Safety valve (a)	Blows off at refrigerant pressure of 40 ± 5 bars. Closes at max. 5 bars below opening pressure.

⚠

Parts which have come into contact with compressor oil for R12 or R134a may only be installed in systems operating with the same refrigerant.

B. Models 124.034/036

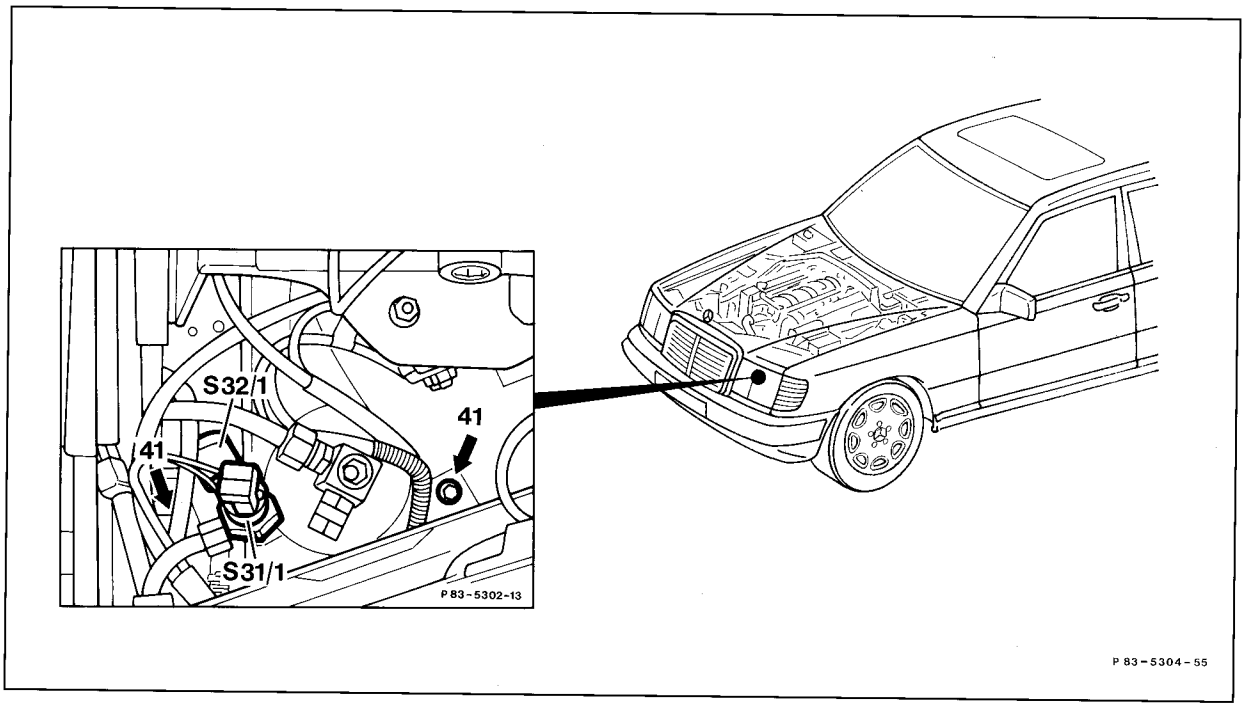

Air conditioner	empty (recycling).
Plug from pressure switches (S31/1 and S32/1)	detach.
Both pressure switches	unscrew.
Lines to fluid reservoir	disconnect, connect and tighten to 15-18 Nm.
Both bolts (41)	unscrew and remove fluid reservoir.
Install	in reverse sequence, lubricating the thread for the hoselines with compressor oil. If the fluid reservoir has been replaced, fill the new fluid reservoir with approx. 10 cm^3 compressor oil.
Air conditioner	evacuate, fill, check operation and for leakage (83-508), allowing the engine to idle only in the first 4 minutes.

Note
In the event of air conditioner malfunctions resulting from leakage, contamination or icing up, in general install a new fluid reservoir when the compressor is repaired or renewed.

Commercially available tools

Version	Steel housing for R12 refrigerant, aluminum housing for R134a refrigerant, with sight glass
Safety valve (a)	Blows off at refrigerant pressure of 40 ± 5 bar. Closes at max. 5 bar below opening pressure.

⚠
Parts which have come into contact with compressor oil for R12 or R134a may only be installed in systems operating with the same refrigerant.

83-542 Testing, removal and installation of pressure switch for A/C compressor in fluid reservoir

Operation no. of operation texts and woks unites or standard texts and flat rates 83–0584

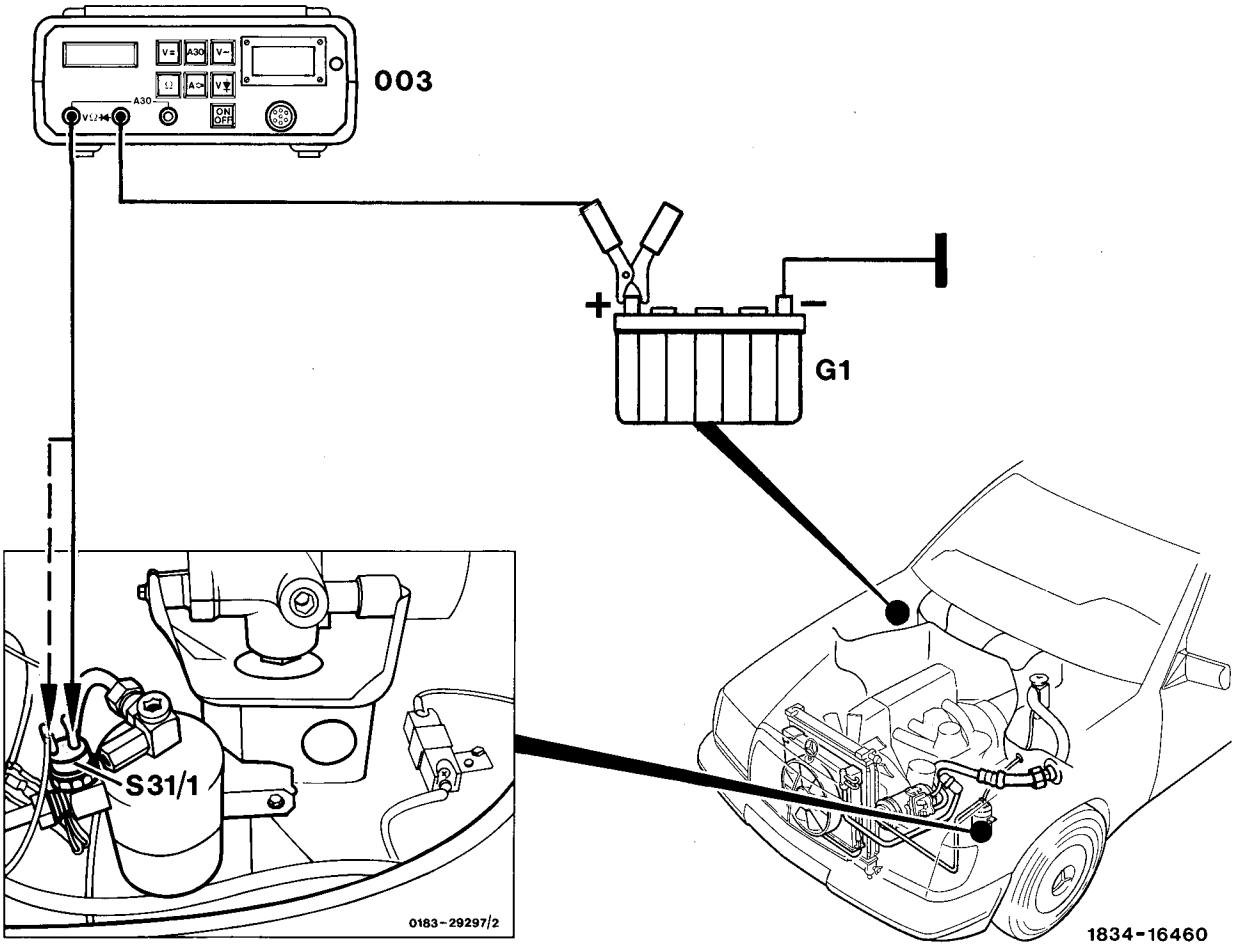

Testing

Ignition and air-conditioner	switch on.
Voltmeter	check positive connection to battery and ground one after the other at the two terminals on the pressure switch (S31/1). If ground is present only at one terminal, the air-conditioner is either not charged sufficiently or the pressure switch (S31/1) is defective. If ground is present at both terminals and the refrigerant compressor does not switch on, check compressor shut-off (83-505).
Refrigerant level	check, for this purpose allow engine to run at idle and jump the two terminals on the pressure switch (S31/1). Assure that refrigerant flows without bubbles after A/C compressor switches on by watching obervation glass on fluid reservoir; recharge air-conditioner if required.

Removal and installation

Air-conditioner	drain.
Both plugs on pressure switch (S31/1)	disconnect.
Pressure switch (S31/1)	unscrew.
Connection on fluid reservoir	plug.
Reinstall in reverse order	moisten O-ring with refrigeration oil and tighten to 20 ± 4 Nm.
Airconditioner	evacuate, charge, check for proper function and leakage (83-508), allow engine to run at idle speed only for first 4 minutes.

Data

Pressure switch (S31/1) in fluid reservoir for A/C compressor	switch-off pressure: 2.0/30 bars switch-on pressure: 2.6/22 bars

83-544 Testing, removal and installation of pressure switch for auxiliary fan in fluid reservoir

Operation no. of operation texts and work units or standard texts and flat rates 83-0587

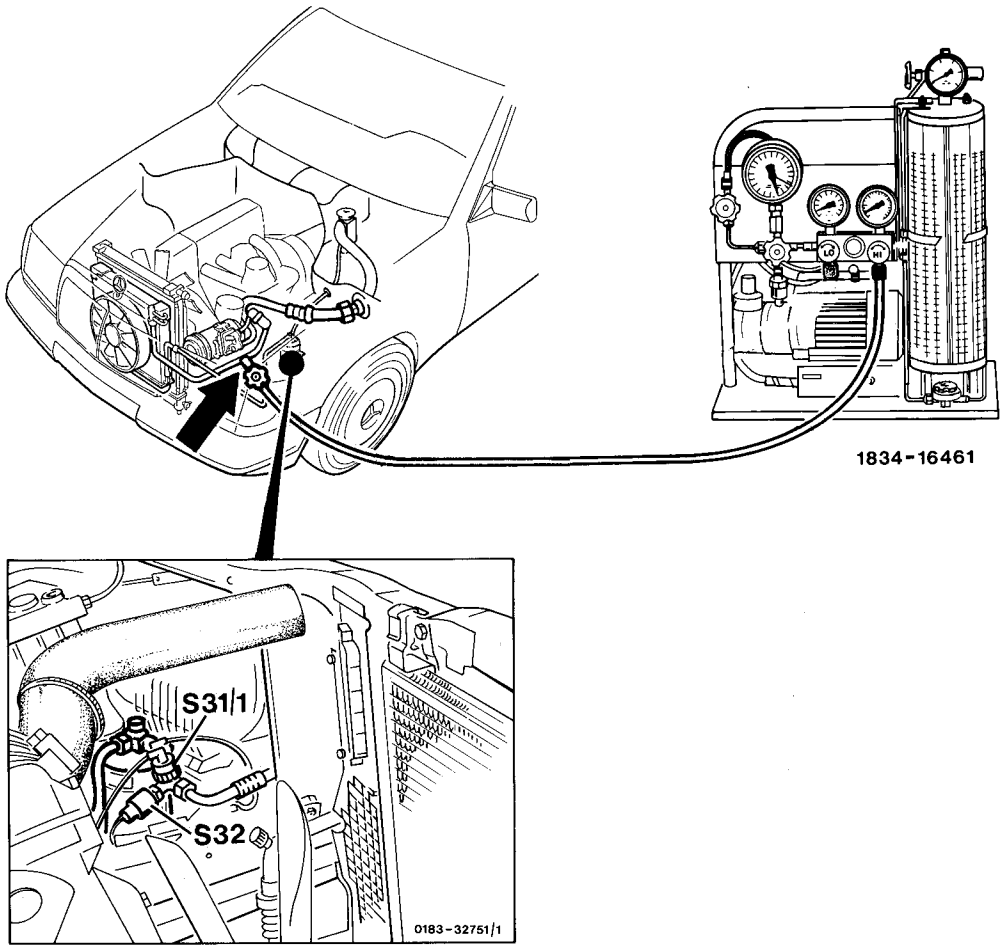

Testing

Ignition	switch on.
Terminals on pressure switch (S32)	jump. If the auxiliary fan does not run at speed 1 the pressure switch is O.K. and the malfunction is elsewhere (see electrical circuit diagrams 83-506).

Connect high-pressure gauge (arrow)	to fitting (arrow).
Air-conditioner function	switch on.
Set fan switch	to speed 4.
Run engine	at idle until pressure on gauge reaches approx. 22/18 ± 0.5 bars (corresponding to pressure of approx. 20/16 ± 0.5 bars on pressure switch (S32), increase engine speed slowly if required. If auxiliary fan does not switch on at speed 1 the pressure switch is defective.
Run engine	at idle until the pressure on the gauge reaches approx. 17/14 ± 0.5 bars (corresponding to a pressure of approx. 15/12 ± 0.5 bars on pressure switch (S32), disconnect one plug from pressure switch (S31/1) if required. If the auxiliary fan does not switch off the pressure switch (S32) is defective.

Removal and installation

Air-conditioner	drain.
Disconnect both plugs	from pressure switch (S32).
Unscrew	pressure switch (S32).
Plug	fluid reservoir at fitting.
Reinstall in reverse order	moisten O-ring with refrigeration oil and tighten to 10 ± 2 Nm.
Air conditioner	evacuate, recharge and check for proper function and leakage (83-508); allow engine to run at idle speed only for first 4 minutes.

Data

Pressure switch (S32) in fluid reservoir for auxiliary fan speed 1 and, on 4-cylinder engines, for electromagnetic engine fan clutch	Switch-off pressure: 15 ± 0.5 bars (green) 12 ± 0.5 bars (red) Switch-on pressure: 20 ± 0.5 bars (green) 16 ± 0.5 bars (red)

83-546 Testing, removal and installation of evaporator temperature sensor

Operation no. of operation texts and work units or standard texts and flat rates 83-0146

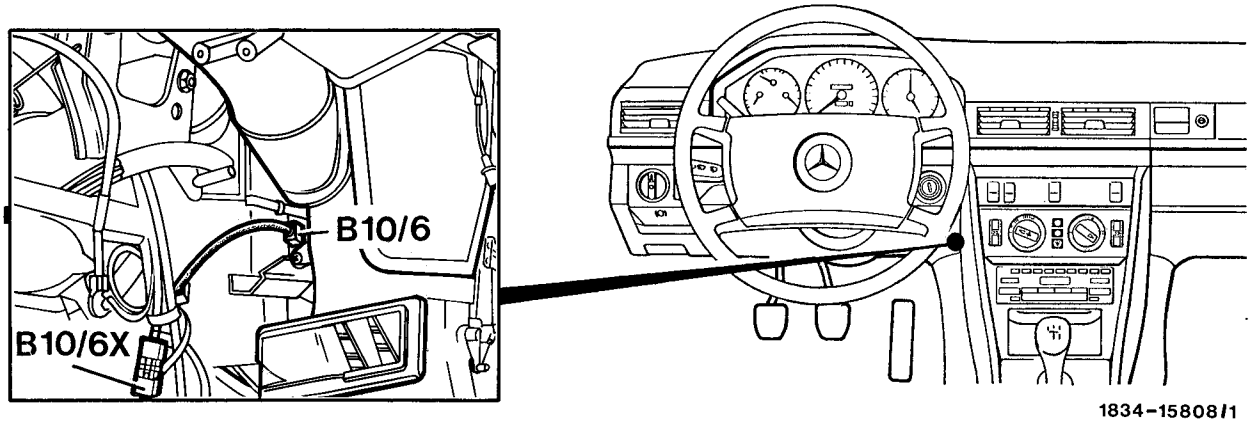

1834-15808/1

Bottom cover below instrument panel on left-hand side	remove.
Cable strap	disconnect.
2-pole plug connector (B10/6x)	disconnect.
Evaporator temperature sensor (B10/6)	pull out.
Temperature sensor	test, replace if required.
Reinstall	in reverse order.
Refrigeration capacity	test (83-507)

Test values

Sensor temperature in °C	Resistance in kΩ
+10	18.2 up to 21.5
+15	15.3 up to 17.2
+20	11.5 up to 13.5
+25	9.5 up to 10.5
+30	7.5 up to 8.5
+35	6.0 up to 7.0
+40	4.5 up to 5.5
+45	3.5 up to 4.5

Conventional tester

Multimeter	e.g. Sun, DMM 5

83-547 Testing, removal and installation of outside air temperature sensor

Operation no. of operation texts and work units or standard texts and flat rates . . . . . .

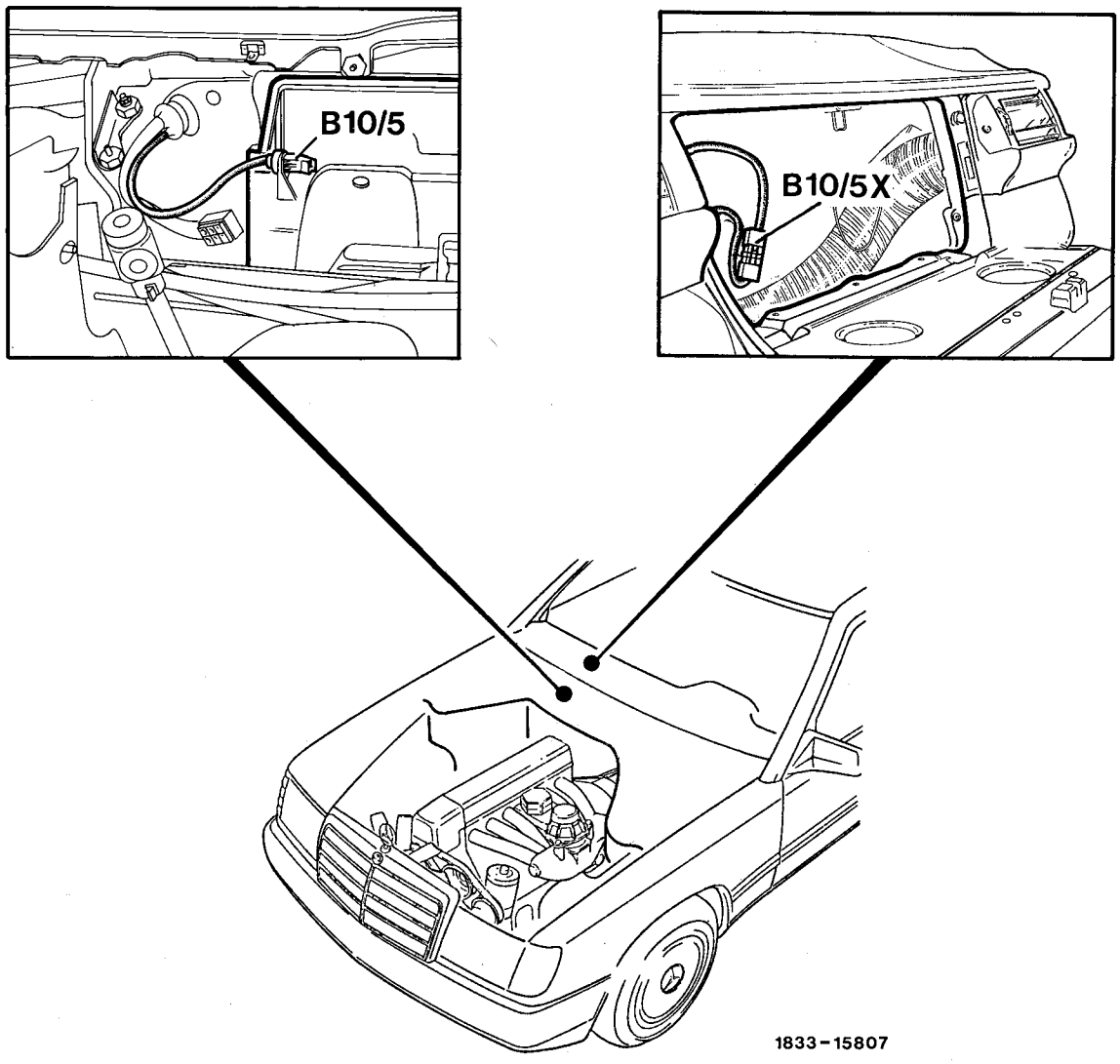

Cover on air inlet (83-140)	remove.
Glove box	remove.
2-pole plug connector (B10/5x).	pull out.
Outside air temperature sensor (B10/5);	pull out, for this purpose remove housing for 2-pole connector (B10/5x). Test, replace if required.
Reinstall.	in reverse order.
Air conditioner/automatic temperature control (83-507).	test.

Test values

Sensor temperature in °C	Resistance in kΩ
+ 10	5.0 up to 6.0
+ 15	4.0 up to 4.6
+ 20	3.1 up to 3.9
+ 25	2.4 up to 3.0
+ 30	1.9 up to 2.3
+ 35	1.6 up to 2.0
+ 40	1.4 up to 1.6
+ 45	1.1 up to 1.3

Commercially available tester

Multimeter	e.g. Sun, DMM 5

83-552 Removal and installation of expansion valve

Operation no. of operation texts and work units or standard texts and flat rates 83-0750

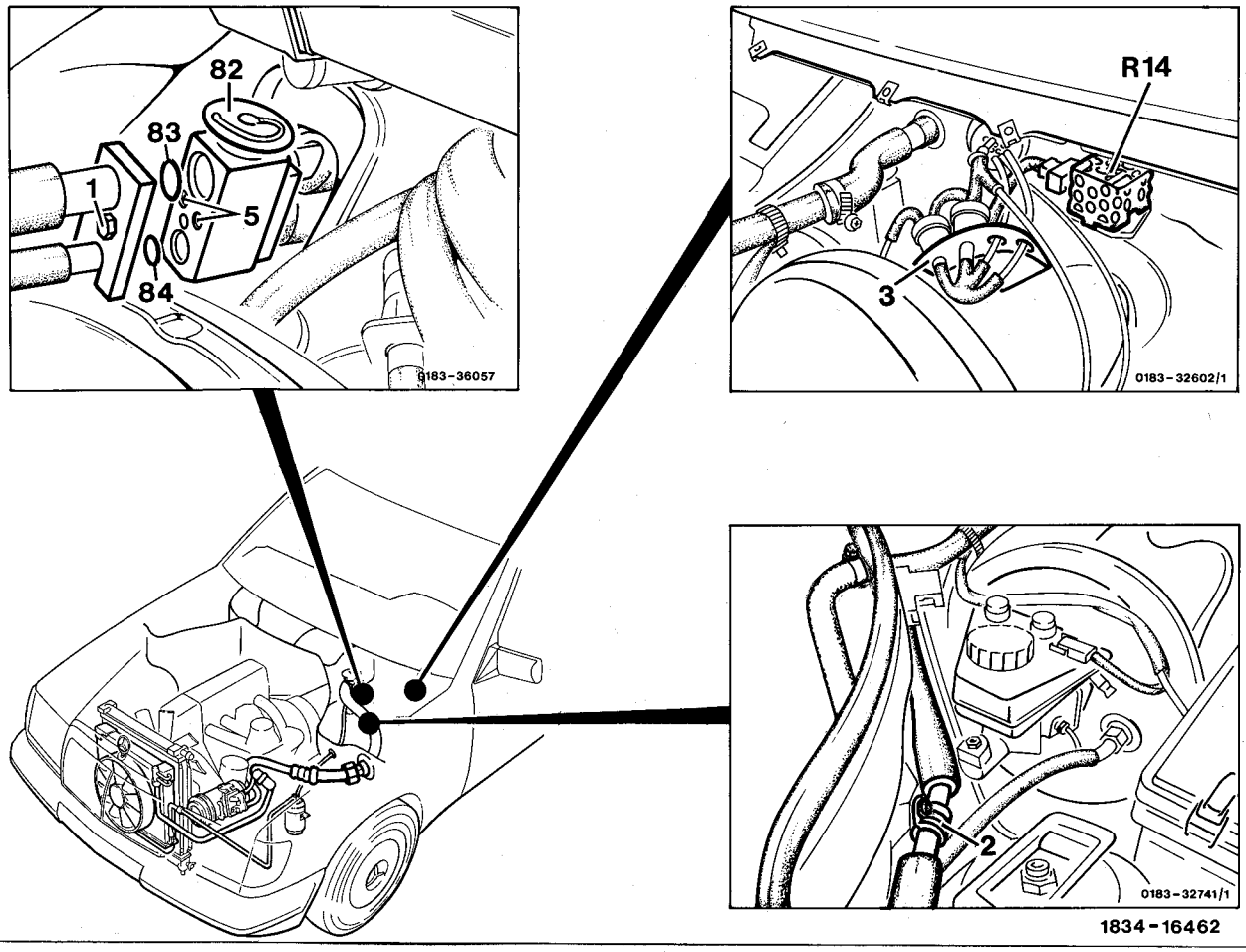

Air conditioner.	drain.
Mount for check valves (3)	remove.
Clamp (2)	loosen.
Screw/hex. nut (1)	unscrew and pull pipes out of expansion valve. Tighten to 10 ± 3 Nm.
Both screws (5)	unscrew and remove expansion valve. Tighten to 8 ± 2 Nm.

Pipes and fittings on evaporator with dummy plugs	plug.
Reinstall	in reverse order; replace O-rings (83 and 84) as well as O-rings on evaporator pipes and moisten with refrigeration oil.
Fluid reservoir	replace (83-540).
Air conditioner	evacuate and recharge; test for proper function and leakage (83-508); allow engine to run at idle speed only for first 4 minutes.

83-554 Removal and installation of evaporator

Operation no. of operation texts and work units or standard texts and flat rates 83-0737

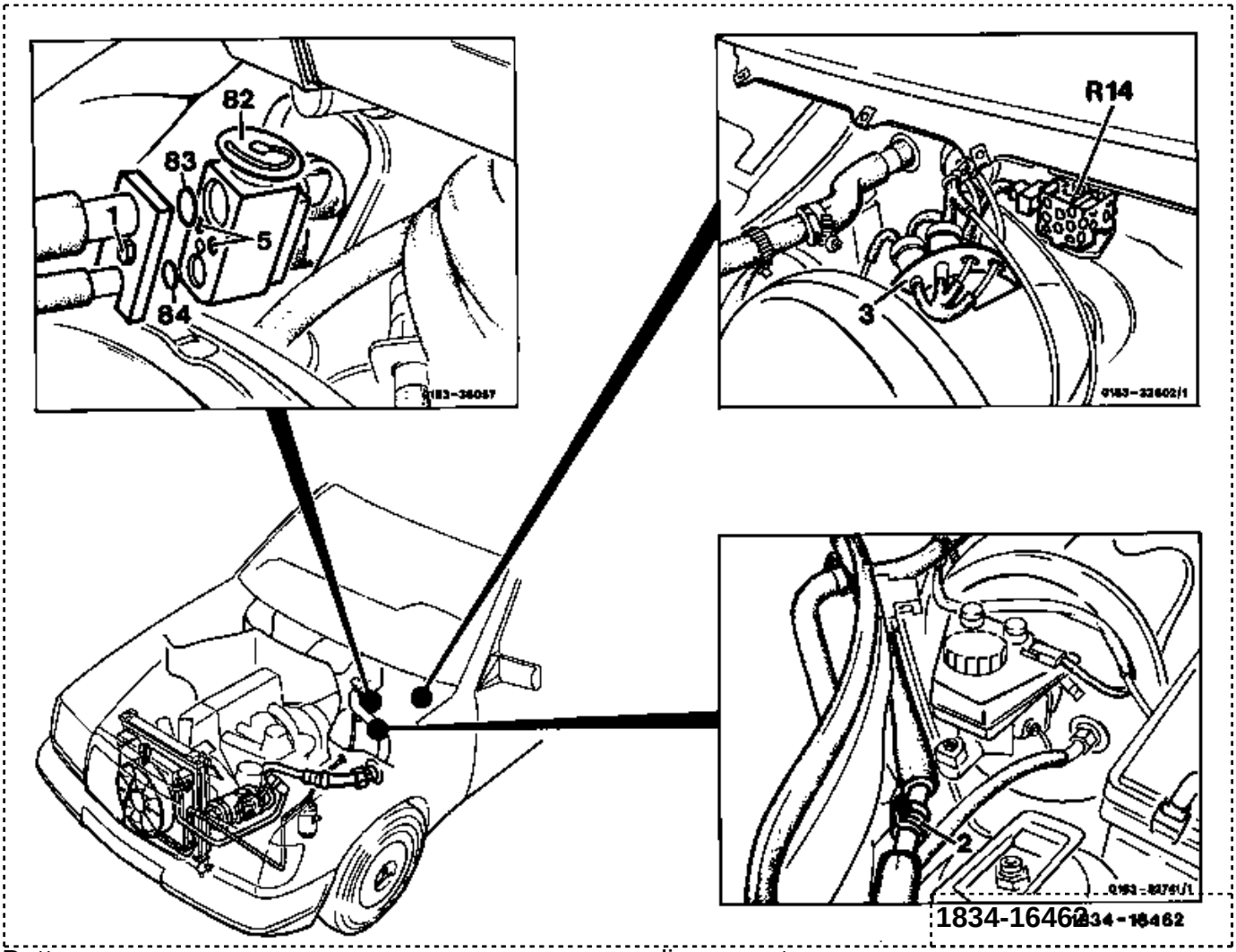

Battery	disconnect.
Air conditioner	drain.
Coolant	drain.
Hoses on heat exchanger	disconnect.
Clamp (2)	loosen.
Mount for check valves (3)	remove.
Screw/hex. nut (1)	unscrew and pull pipes out of expansion valve.
2-pole connector on dropping resistor network (R14)	disconnect and pull out lead to blower motor.

Copyright Daimler AG 1/8/09 G/06/08. This WIS printout will not be recorded by the update service.

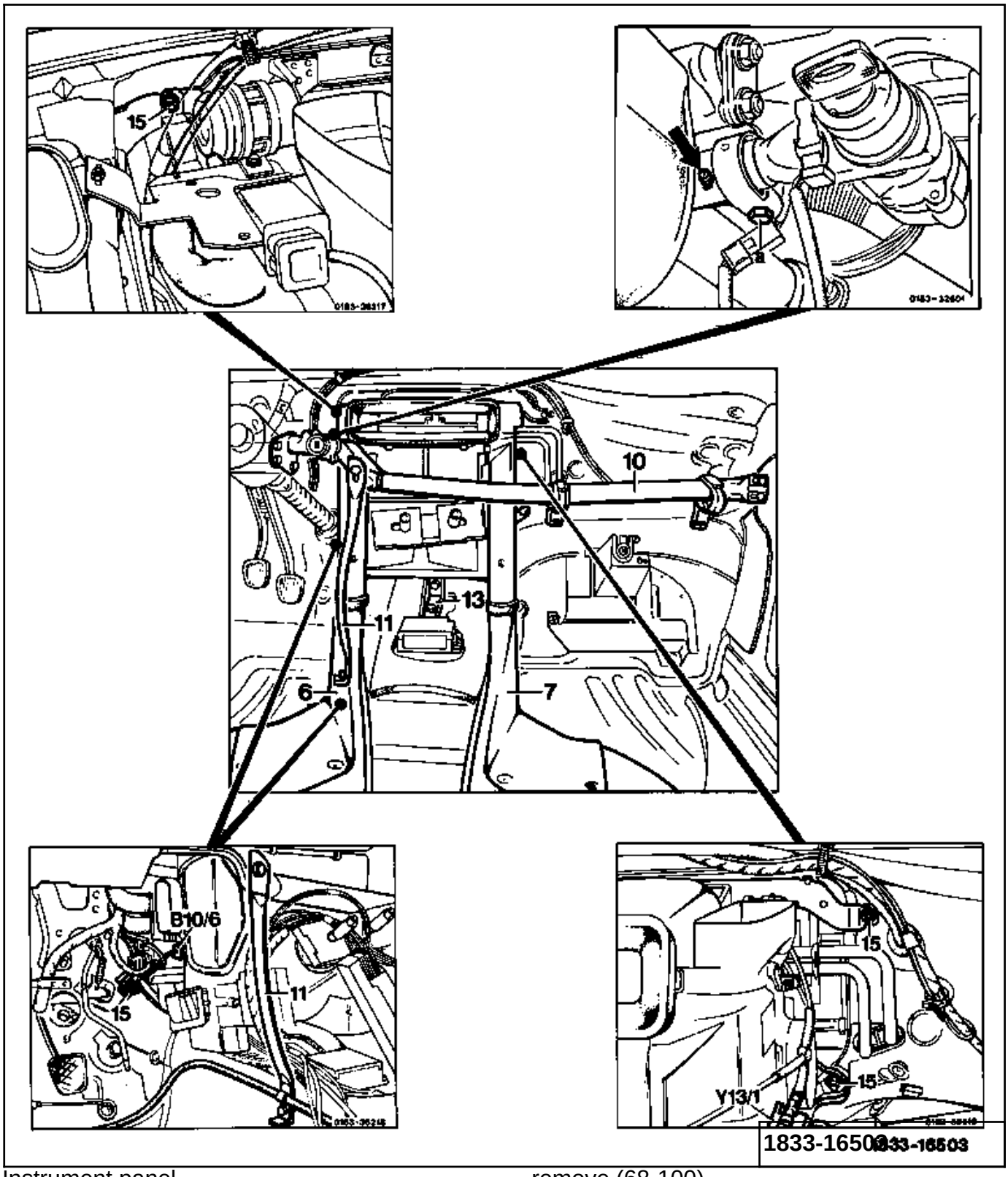

Instrument panel	remove (68-100).
Center console	remove (68-200).
Left and right air duct (6 and 7) for rear compartment ventilation	loosen and pull off of heater and air conditioner box.
Cross member (10) and brace (11)	remove.
Mount (13)	remove.

Copyright Daimler AG 1/8/09 G/06/08. This WIS printout will not be recorded by the update service.

Ignition lock	pull out; for this purpose loosen screw (a), turn ignition key to position 1 and press in retainer (arrow).
2-pole connector on left and right heat exchanger temperature sensors (B10/2 and B10/3) and evaporator temperature sensor (B10/6)	remove.
Vacuum lines and 2-pole connector and switch-over valve (Y13/1)	remove.
Left and right air ducts for side nozzles.	remove.
4 nuts (15)	unscrew and pull heater and air conditioner box downward and out after pulling outside air temperature sensor (B10/5) from holder.

Disassembly and reassembly of heater and air conditioner box

1 Remove ten clips (arrows).

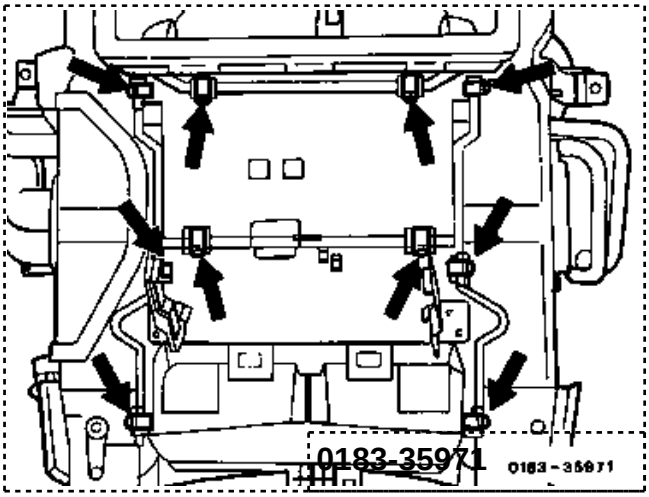

2 Unscrew4 screws (17) and remove cover (19).

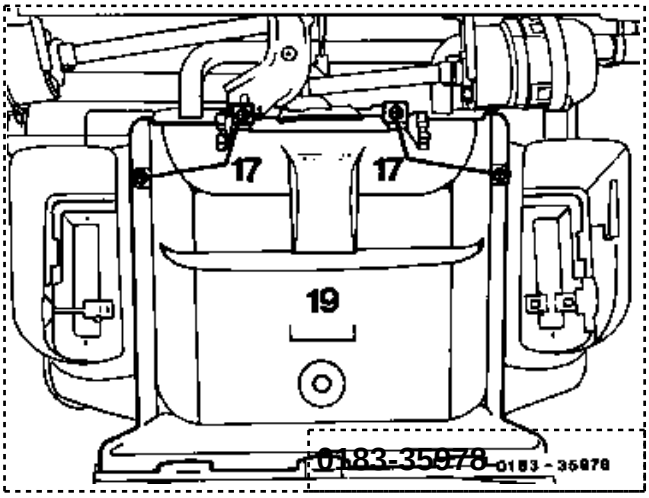

Copyright Daimler AG 1/8/09 G/06/08. This WIS printout will not be recorded by the update service.

3 Unclip clamps (22 and 23) on heater pipes.

4 Push off connecting rod for fresh air/ recirculated air flap (arrow).

5 Screw out three screws (20) and remove vacuum element (42).

6 Pull heat exchanger (9) upward and out.

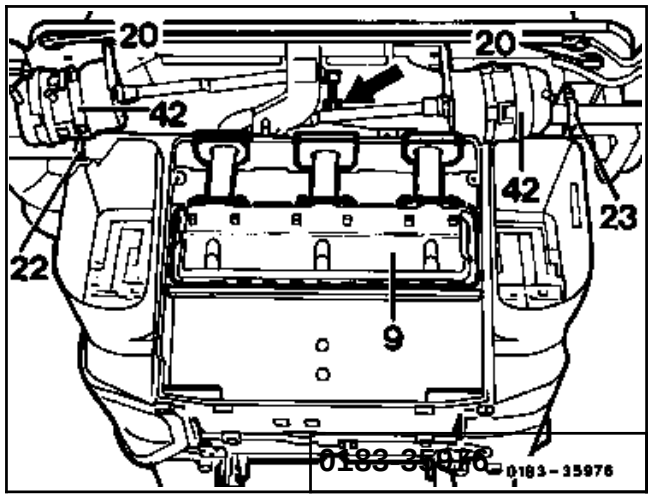

7 Screw out two screws (arrow) each on left and right side part.

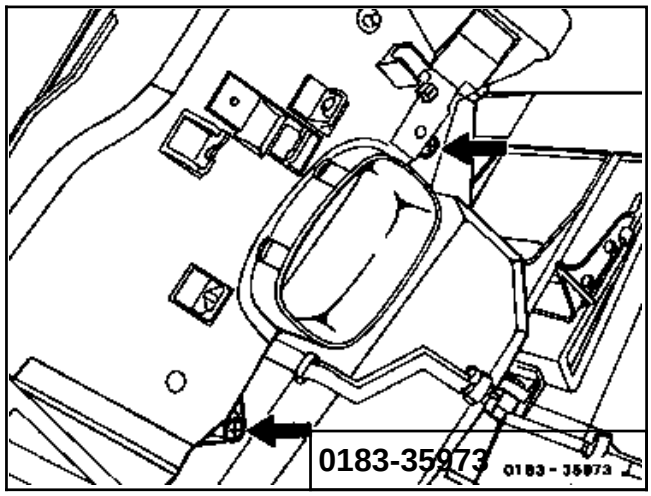

8 Pull right side part out slightly and unclip joint for leg room flap (arrow).

9 Pull out both side parts.

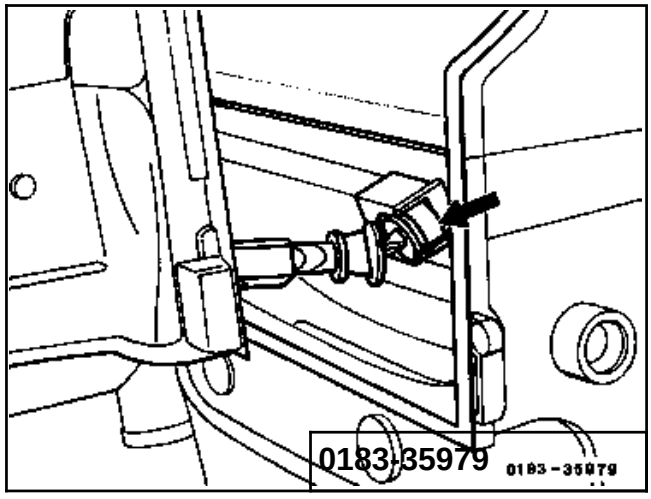

Copyright Daimler AG 1/8/09 G/06/08. This WIS printout will not be recorded by the update service.

10 Unclip three clips (arrow) each on left and right side of heater and air conditioner box and remove upper section of housing.

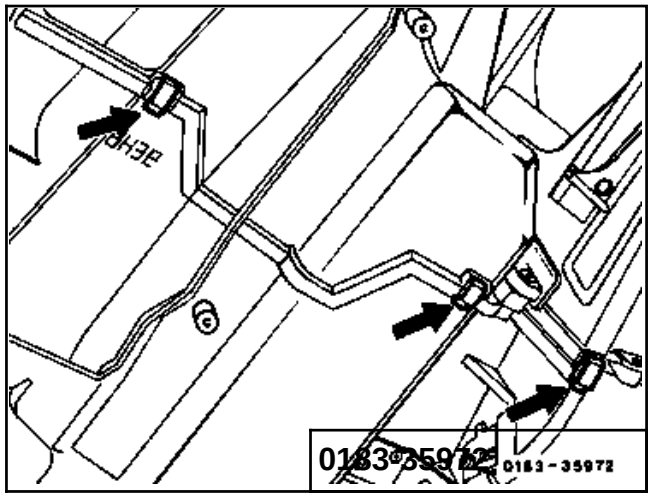

11 Unclip three clamps each on right and left sides of heater and air conditioner box and one clamp in the center (arrow).

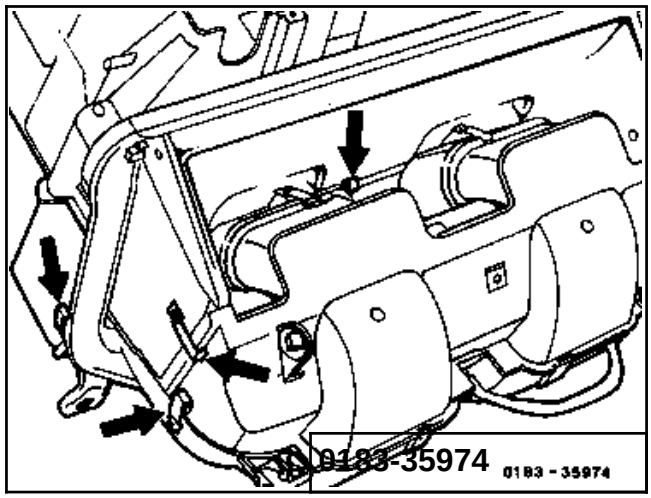

12 Press out clip (arrow).

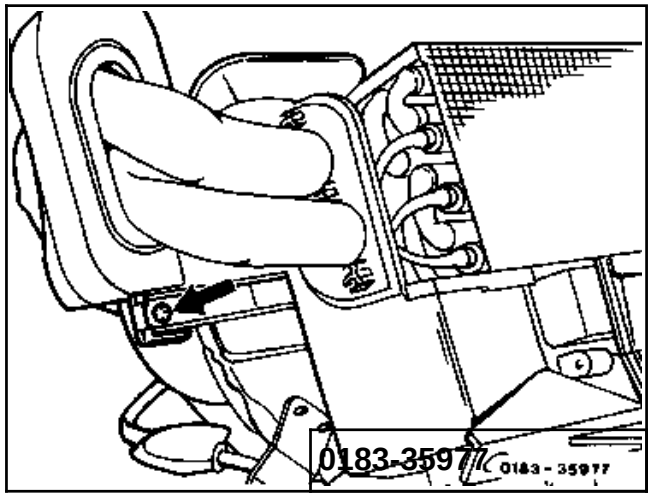

Copyright Daimler AG 1/8/09 G/06/08. This WIS printout will not be recorded by the update service.

13 Pry evaporator (4) out of heater and air conditioner box.

14 Clean inside of evaporator housing.

15 Remove screen (23) from removed evaporator and glue onto new evaporator.

16 Position evaporator in heater and air conditioner box. Continue reassembly in opposite order.

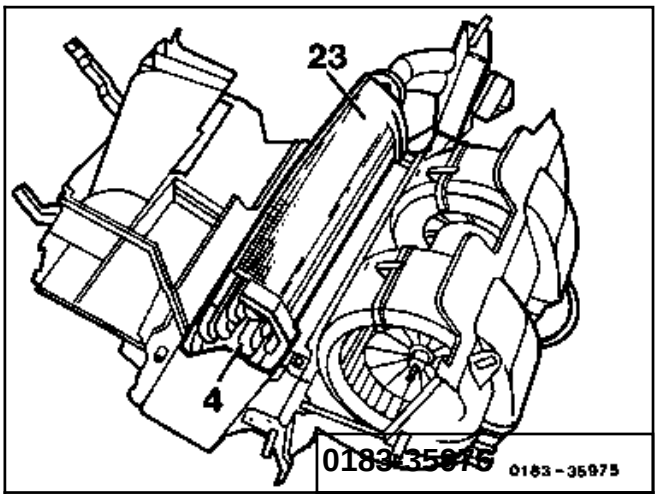

17 Screw expansion valve off removed evaporator and install with new O-rings on new evaporator.

18 Check gasket on bulkhead and replace if required. In addition apply sealant (arrow) to sealing surface of air conditioner box.

19 Install heater and air conditioner box in opposite order.

20 Fill with coolant and check cooling system for leakage.

21 Evacuate air conditioner, recharge and check for proper function and leakage (83-508); allow engine to run at idle speed only for first 4 minutes.

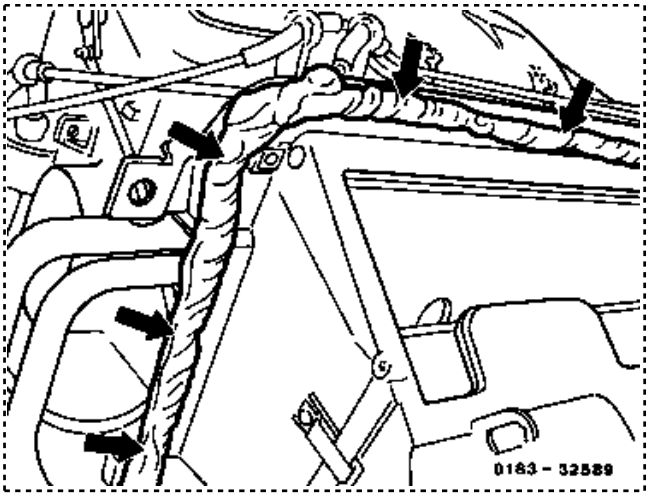

Copyright Daimler AG 1/8/09 G/06/08. This WIS printout will not be recorded by the update service.

Operation no. of operation texts and work units, standard texts and flat rates:

A. "Behr" air conditioner unit

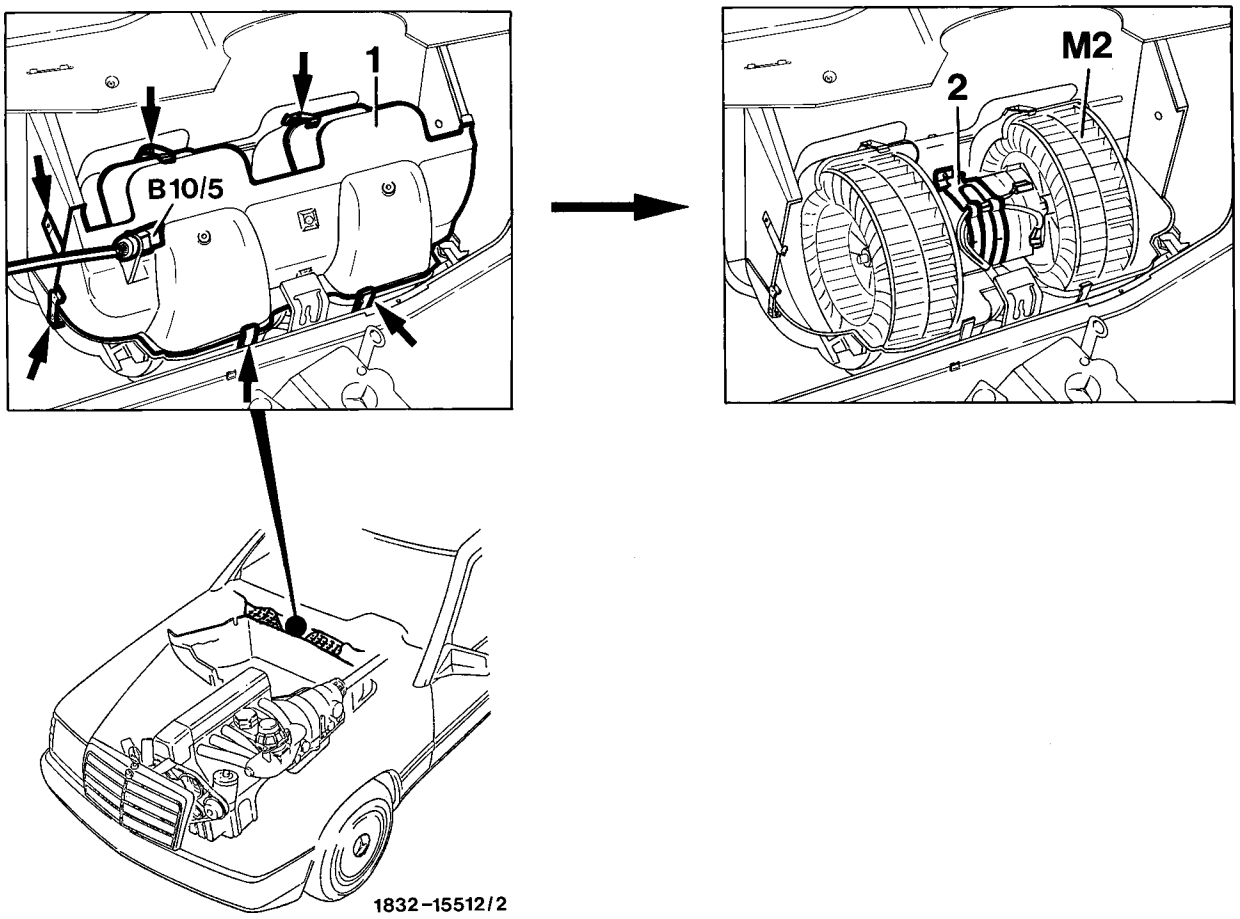

Windshield wiper system	remove (82-680).
Outside air temperature sensor (B10/5)	pull out.
Cover (1)	remove; for this purpose unclip 8 clamps (arrows).
Mounting strap (2)	unclip.
Flat plug on blower motor	pull off and remove blower motor (M2).
Reinstall in opposite order	assure that the blower motor catches properly in the mount.

B. "Siemens/thermal" air conditioner unit

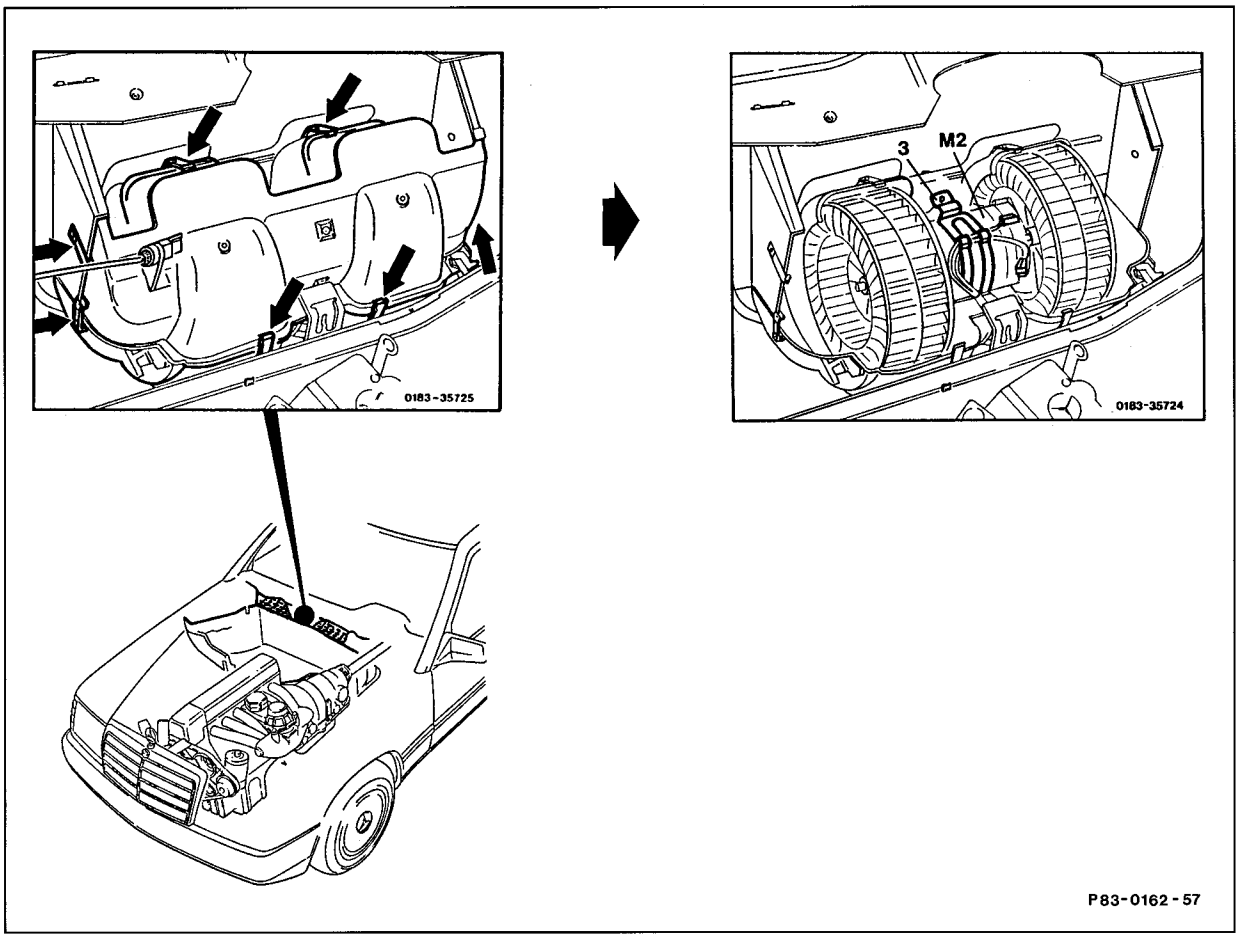

Wiper system	remove (82-680).
Outside air temperature sensor	remove.
Cover	remove, by unclipping 8 clips (arrows).
Retaining strap (3)	unclip.
Flat plug on blower motor	detach and remove blower motor (M2).
Install in reverse sequence	ensure that the blower motor engages correctly in the mounting. If the blower motor has had to be replaced, observe note.

Note

The "Siemens/thermal" air conditioner unit has been installed since 01/88. As only the Behr blower motor is available for all air conditioner units in the replacement parts market, the motor bracket also has to be exchanged when replacing the blower motor on the Siemens/thermal air conditioner unit boxes.

The Siemens/thermal air conditioner unit can be recognised by the bracket on the blower motor, which is secured with 4 screws (arrows) (this is 3 screws in the case of "Behr").

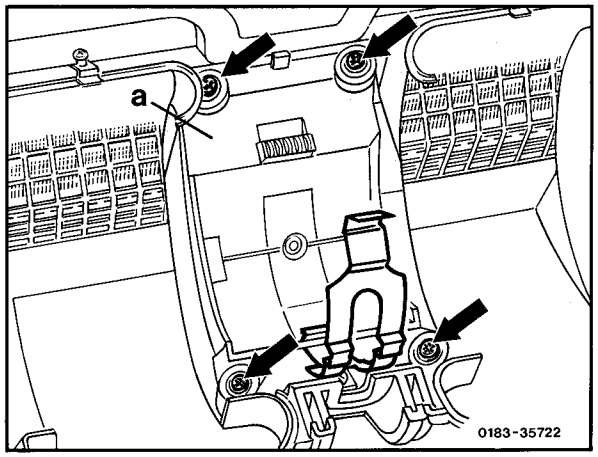

If the electrical cables are soldered to the blower motor, snip off immediately after the connections and solder a push-on bush to the red cable and a flat-pin terminal to the brown cable.

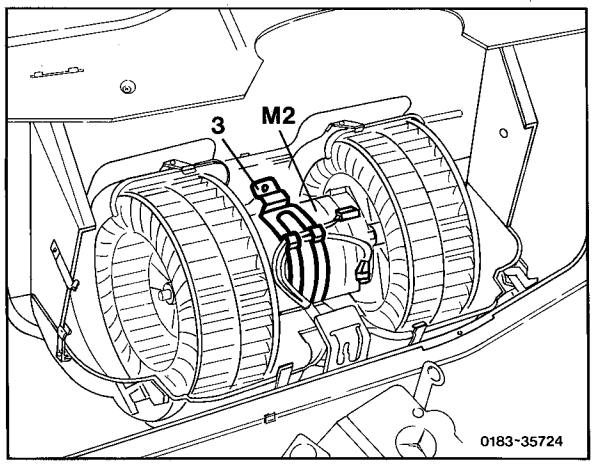

Scope of work

1 Remove bracket (item a) by unscrewing 4 screws (arrows).

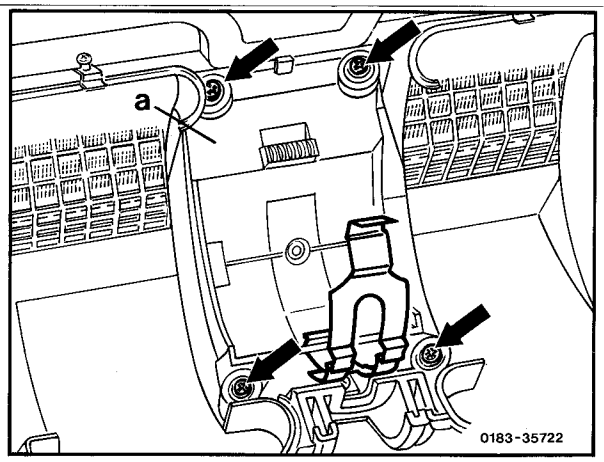

2 Install new retaining strap and new bracket (items 2 and 3) with the existing 3 screws (arrows).

3 Install in reverse sequence.

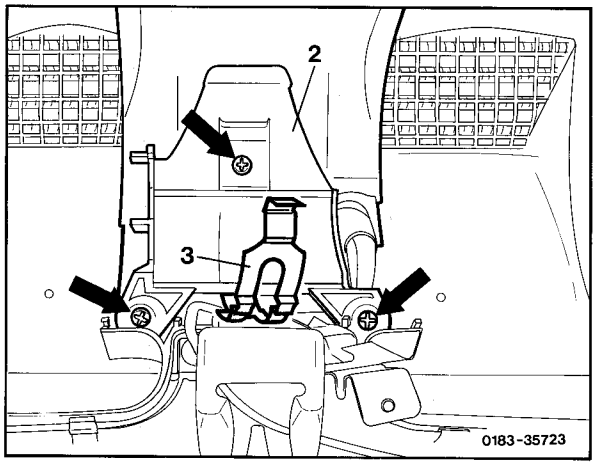

83-558 Removal and installation of air conditioner/automatic temperature control unit (up to 08/87)

Operation no. of operation texts and work units or standard texts and flat rates 83-0648

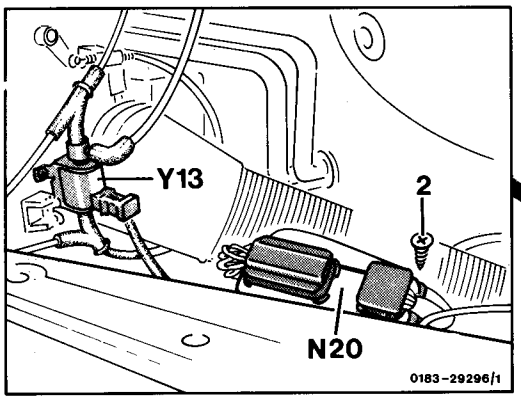

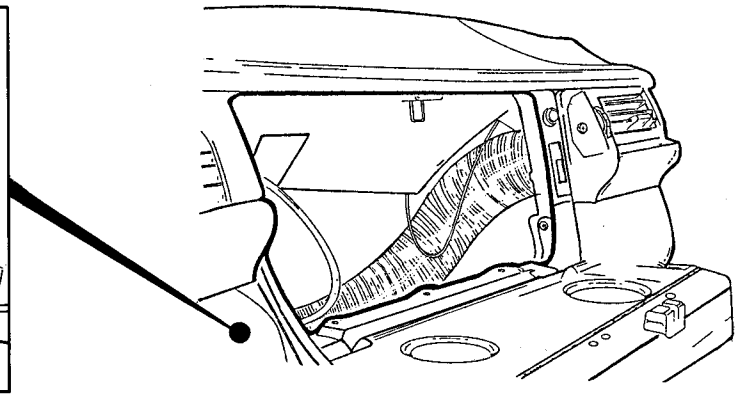

1834-16433

Glove box	remove.
6- and 12-pin connectors on control unit (N20) ..	disconnect.
Screw (2)	screw out.
In opposite order	reinstall.

Operation no. of operation texts and work units or standard texts and flat rates.
83–0595

A. Engine 102 up to 12/88, engine 103 up to 08/89

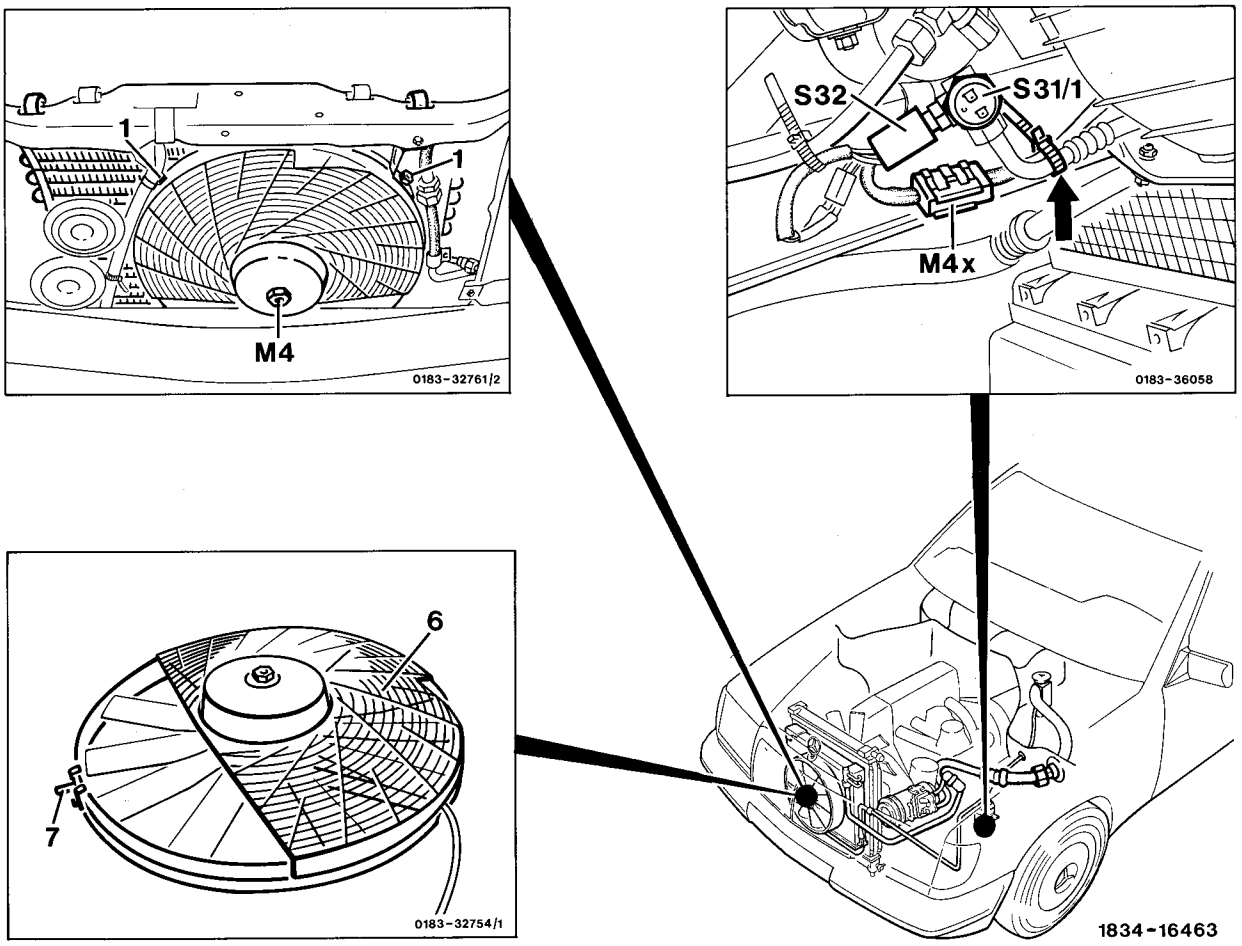

2-pin plug connection (M4x)	disconnect.
Cable strap (arrow)	loosen.
2 screws (1)	unscrewand remove auxiliary fan (M4) toward front.
Guard screen (6)	unclip.
Mount (7)	unscrew
Reinstall	in opposite order.

Check auxiliary fan for proper function	for this purpose switch on ignition and jump the two terminals on pressure switch (S32); do not disconnect terminals from cable harness.
Check auxiliary fan for proper direction of rotation	(clockwise); reverse sockets in 2-pin plug connection (4x) if required.

Data

Current consumption at 13 V ± 0.2 V	max. 17.5 A

B. Engine 102 as of 01/89

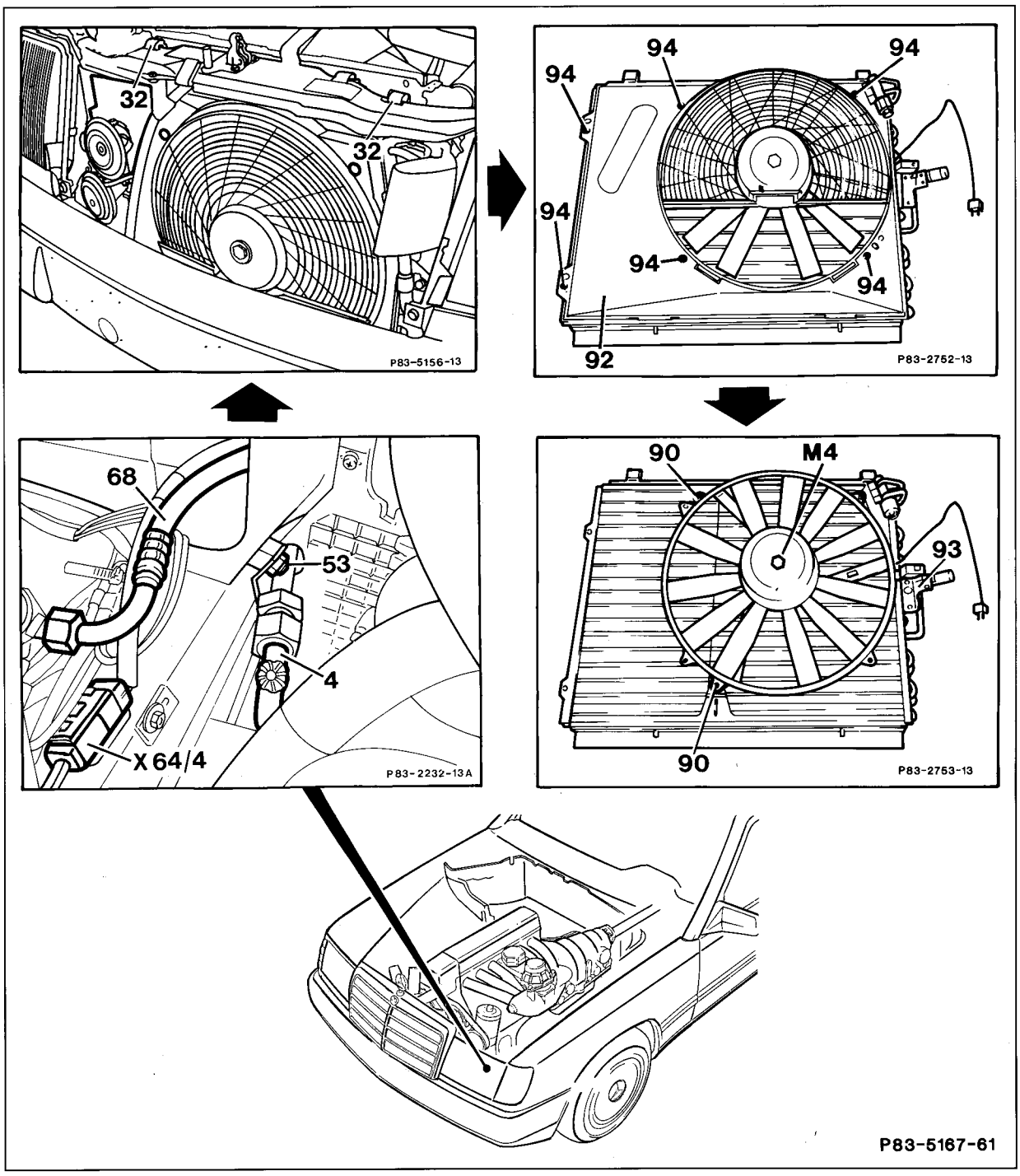

Condenser	remove (83-538).
6 clips (94)	press out, remove air conditioner unit frame (92).

3 screws (90, 93)	slacken.
Auxiliary fan	remove.
Auxiliary fan	check operation by switching on ignition and bridging both connections on pressure switch (S32). Do not separate connections on cable harness.
Direction of rotation of auxiliary fan	check (clockwise), if required transpose bushes in the 2-pin plug connection (X64/4).

Data

Power consumption at 13V ± 0.2V	max. 17.5 A

C. Engine 103 as of 09/89, 104 and 119

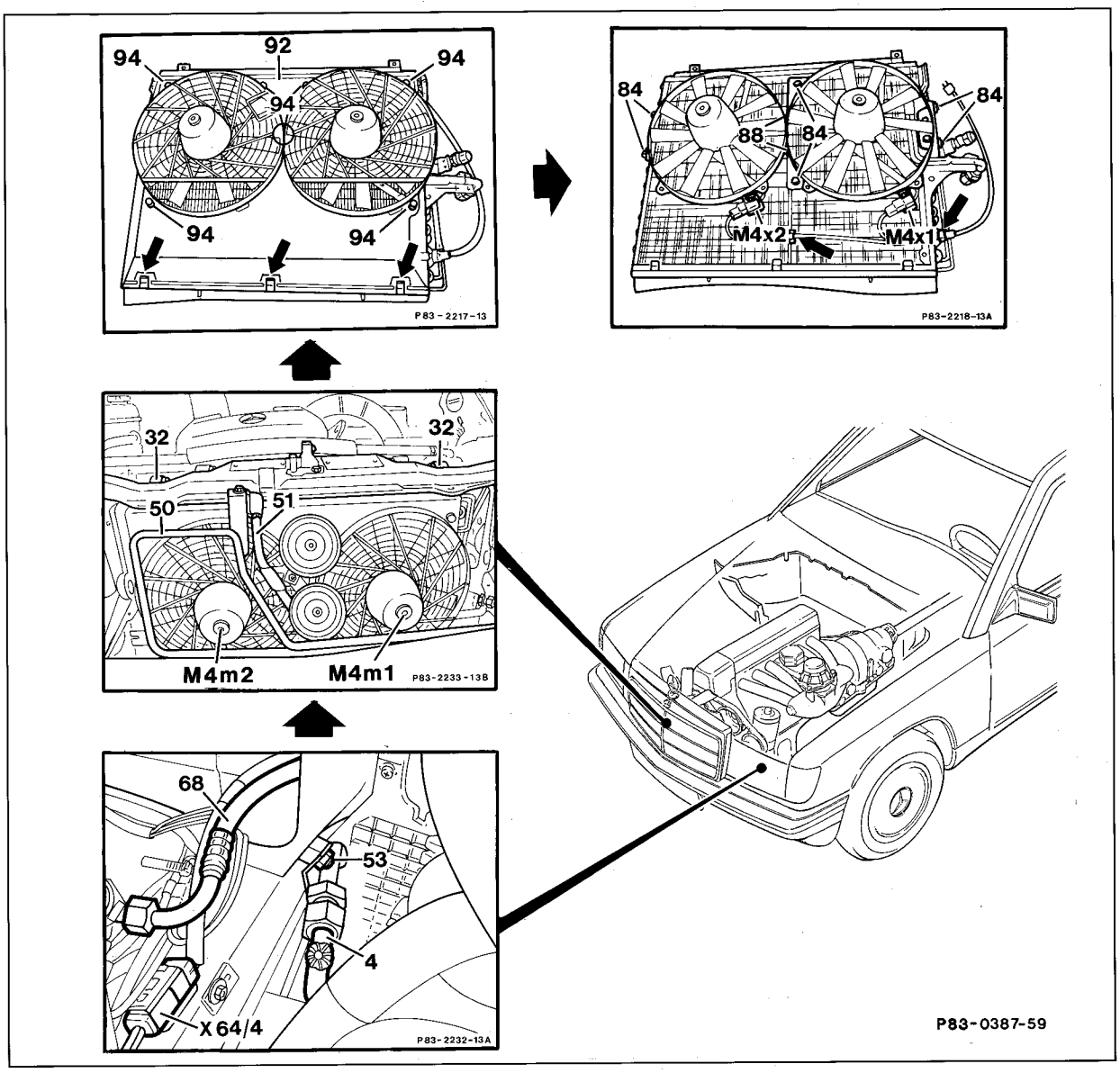

Pressure lines (68) and (4)	disconnect at condenser.
Hexagon nut (53)	slacken.
Radiator	remove, install (20-420).
2-pin plug connection (X64/4)	disconnect.
Cable strap	slacken.

Both clips (32)	unclip.
Condenser	swivel towards engine.
Horns	remove, 1 screw.
Brace (51)	remove, 3 screws.
Coolant pipe (50)	slacken, one other screw.
Condenser	remove upwards.
6 clips (94)	press out, remove air conditioner unit frame (92).
2 2-pin plug connections (M4x1, M4x2)	slacken.
6 screws (84)	slacken, remove dual fan forwards.
Separate 2 fans	slacken 2 screws diagonally (88), change bracket.

Note
Before reinstalling the air conditioner unit frame, carry out electrical function check of fan.

Check auxiliary fan operation	switch on ignition, detach plug on coolant temperature sensor or on auxiliary fan pressure switch and bridge.
Direction of rotation of auxiliary fan	check (clockwise), if required transpose sockets in the 2-pin plug connections (X64/4 or M4x1 on the left and M4x2 on the right).

Data

Power consumption in the second stage at 13 V	25 A

83-562 Testing, removal and installation of switch for air conditioner/automatic temperature control (up to 08/87)

Operation no. of operation texts and work units or standard texts and flat rates .....

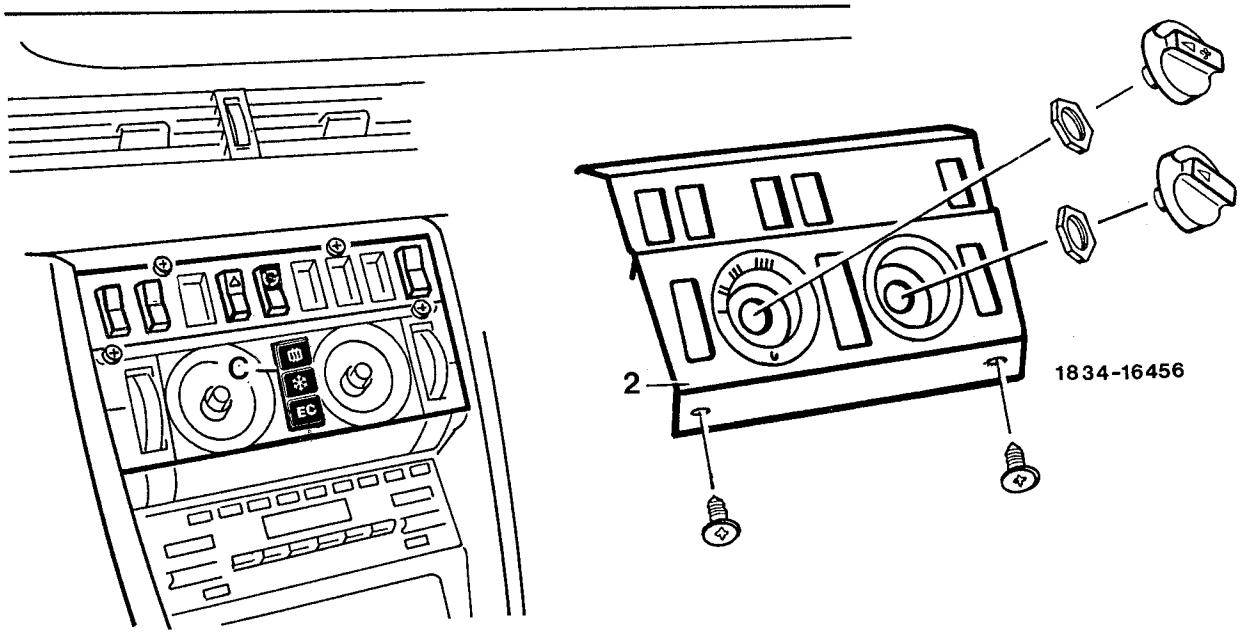

Cover (2)	.....	remove.
Air conditioner switch (C)	.....	disconnect, test.
Reinstall	.....	in opposite order.

Testing

1 Connect ohmmeter to terminals 3 and 4.

2 Set switch to function ❄. Then switch on function ⧈.

Specification: < 1 Ω in each case.

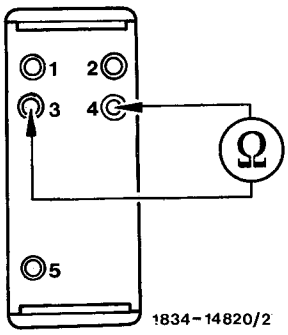

3 Connect ohmmeter to terminals 1 and 2.
Leave function switch switched on.

Specification: < 1 Ω.

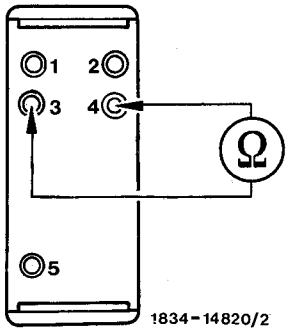

83-564 Testing, removal and installation of switch for fresh air/recirculated air (up to 08/87)

Operation no. of operation texts and work units or standard texts and flat rates 83-0024

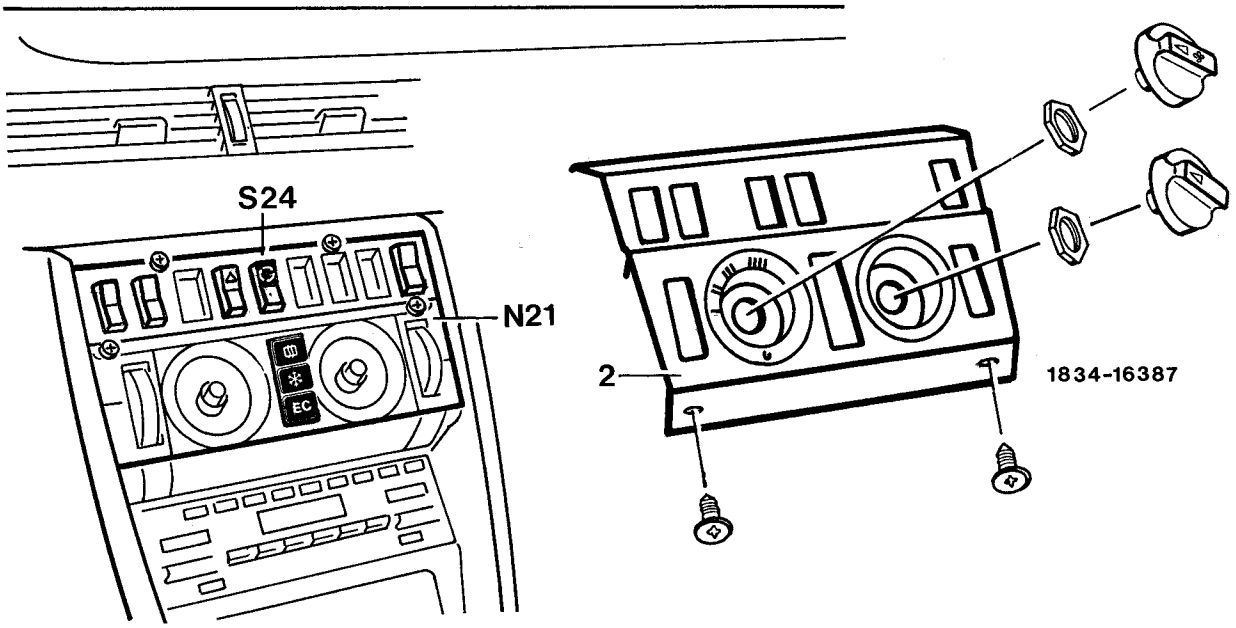

Cover (2)	remove.
Control panel (N21)	remove.
Switch for fresh air/recirculated air (S24)	disconnect, test.
In opposite order	reinstall.

Testing

1 Connect ohmmeter to terminals 3 and 4.

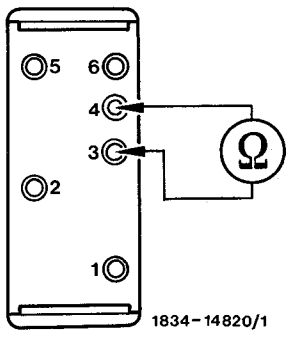

2 Switch on switch (S24) and hold down (arrow).
Specification: 0 - 1 Ω

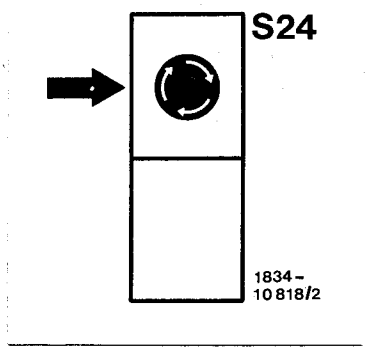

3 Release switch (S24).
Specification: ∞

4 Then connect to terminals 2 and 4.

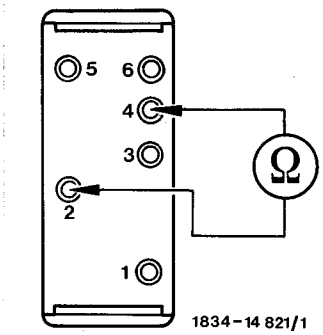

5 Switch off switch (S24) and hold down (arrow).
Specification: ∞

6 Release switch (S24).
Specification: 0 - 1 Ω

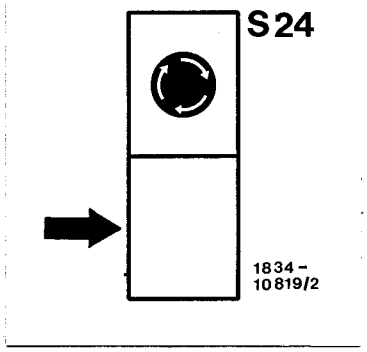

83–566 Removal and installation of switch-over valve (Y13/1) or 4-point valve block (Y11) for fresh air/recirculated air flap

Operation no. of operation texts and work units, standard texts and flat rates:
83–0595

A. Up to 07/91

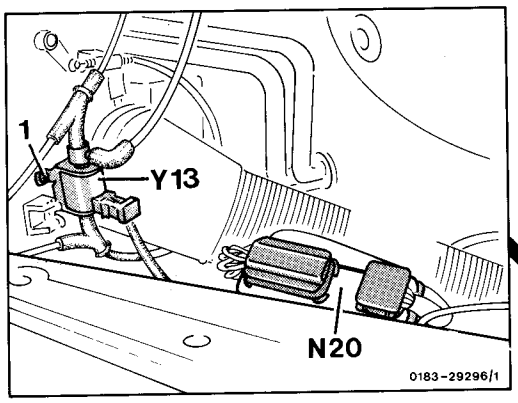

a

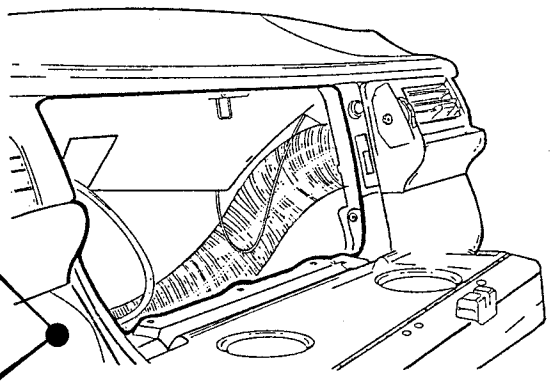

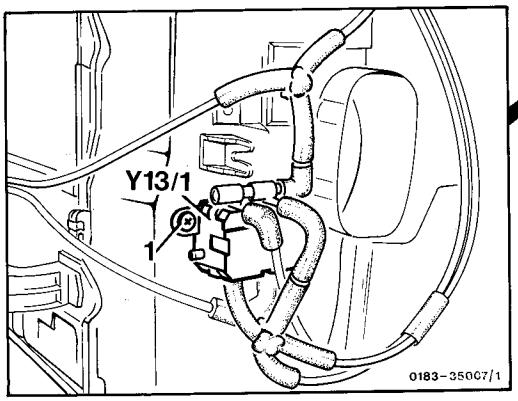

b

a) Y13 Switch-over valve up to 08/87
b) Y13/1 Switch-over valve connection block, 2 positions, as of 09/87

Glove box	remove.
Vacuum lines	disconnect.
2- or 3-pole connection.	disconnect.
Screw (1)	screw out.
Install in reverse sequence	observe colour code on vacuum lines (see vacuum function diagram 83-500, section "N").

B. As of 08/91

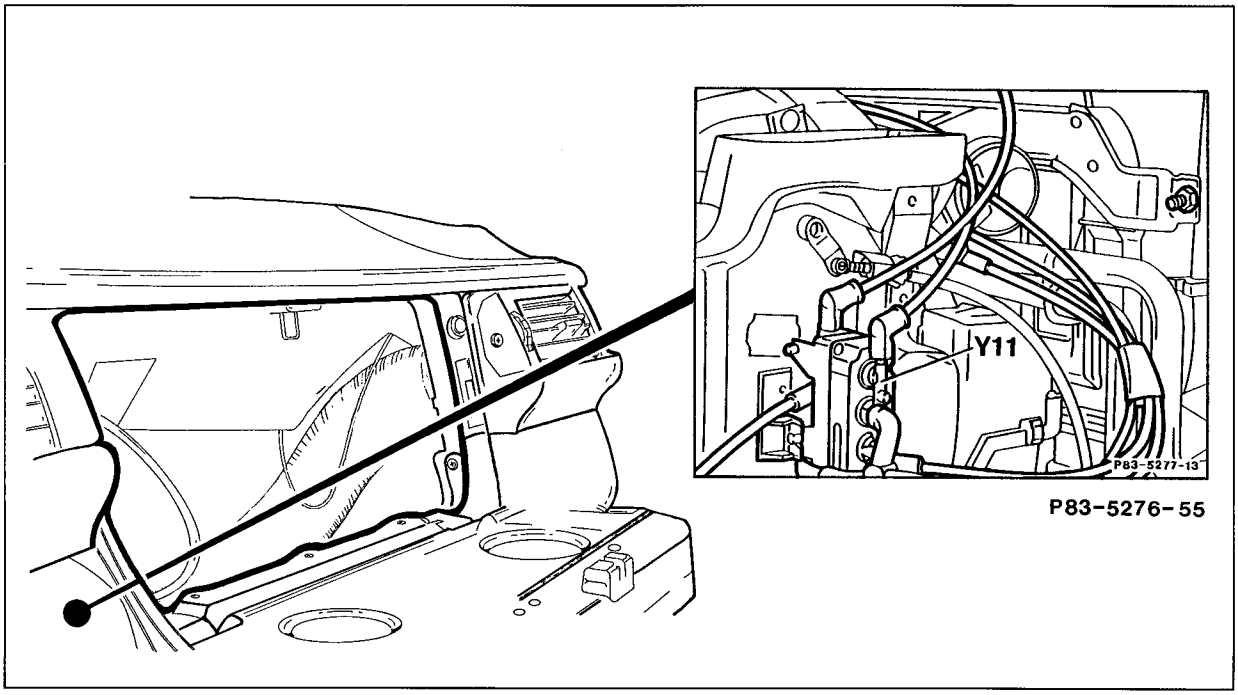

Glove box	remove.
Switch-over valve block (Y11)	unclip from heater box.
Vacuum lines and 6-pole connection	detach.
Install in reverse sequence	observe colour code on vacuum lines (see vacuum function schematic 83-500, section "O").

Operation no. of operation texts and work units or standard texts and flat rates
83–0847

A. Vacuum elements for fresh air/recirculated air flap (42)

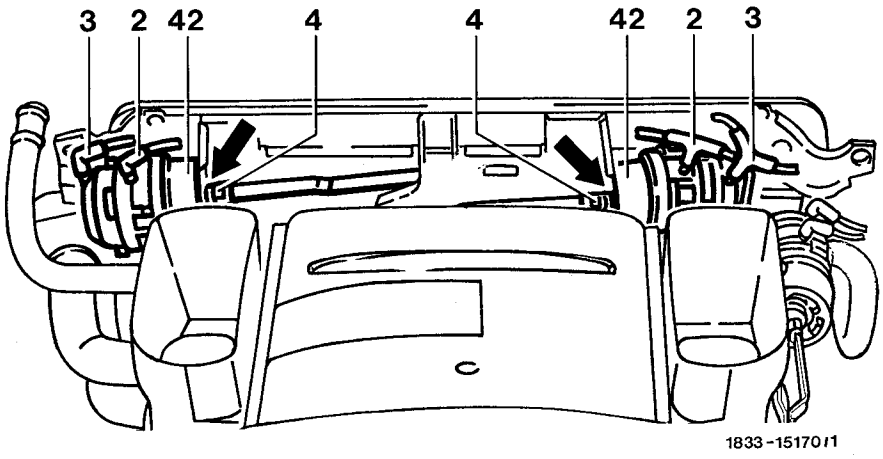

Instrument panel	remove (68-100).
Both vacuum lines (2 and 3)	disconnect.
Clips (4)	open and disconnect actuation rod.
Retainer (arrow)	press down and simultaneously turn vacuum element (42) to left.
Reinstall in reverse order	connect dark red vacuum line (2) at side and medium green/light blue vacuum line (3) at rear.

Check adjustment of fresh air/recirculated air flap, readjust with adjustment screw (6) if required.

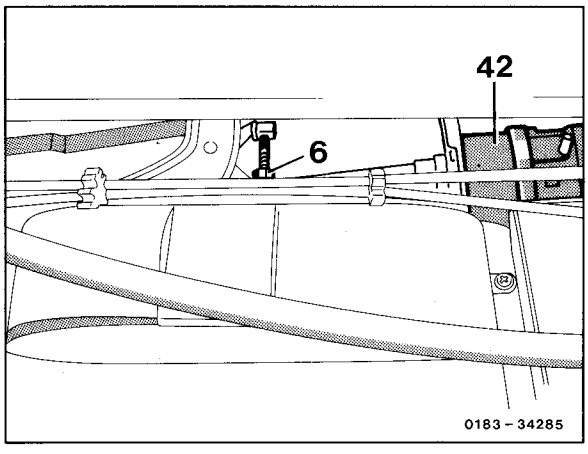

42 Vacuum element for right fresh air/recirculated air flap

B. Vacuum element for blend flap/center nozzle (40) as of 08/91

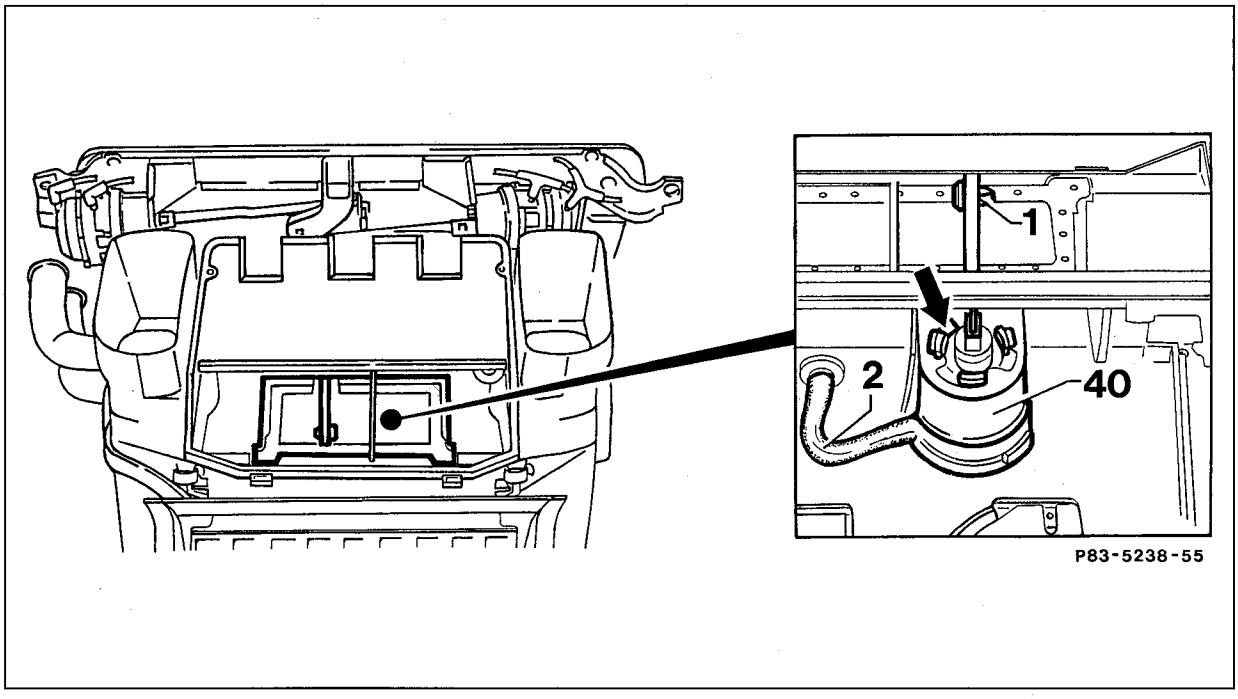

Heat exchanger	remove (83-522).
Clips (1)	press off.
Hose (2) on vacuum element (40)	detach.
Locking device (arrow)	press down and at the same time press the vacuum element (40) to the left.

Install in reverse sequence.

C. Vacuum element for diverter flap/center nozzle (41) as of 08/91

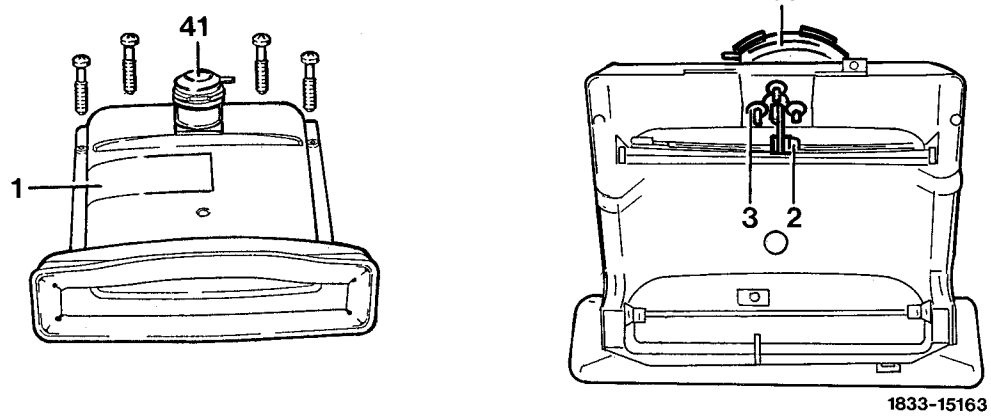

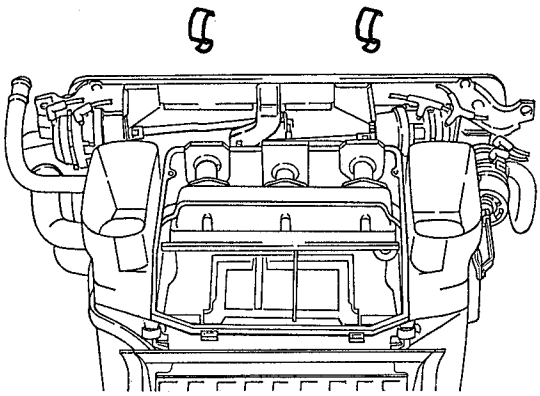

Instrument panel	remove (68-100).
Cover (1)	remove, 4 screws and 2 clips.
Clips (2)	press off.
Locking devices (3)	press off.

Install in reverse sequence.

83-570 Testing, removal and installation of speed sensor on starter ring gear (model 124.1)

Operation no. of operation texts and work units or standard texts and flat rates 83-0645

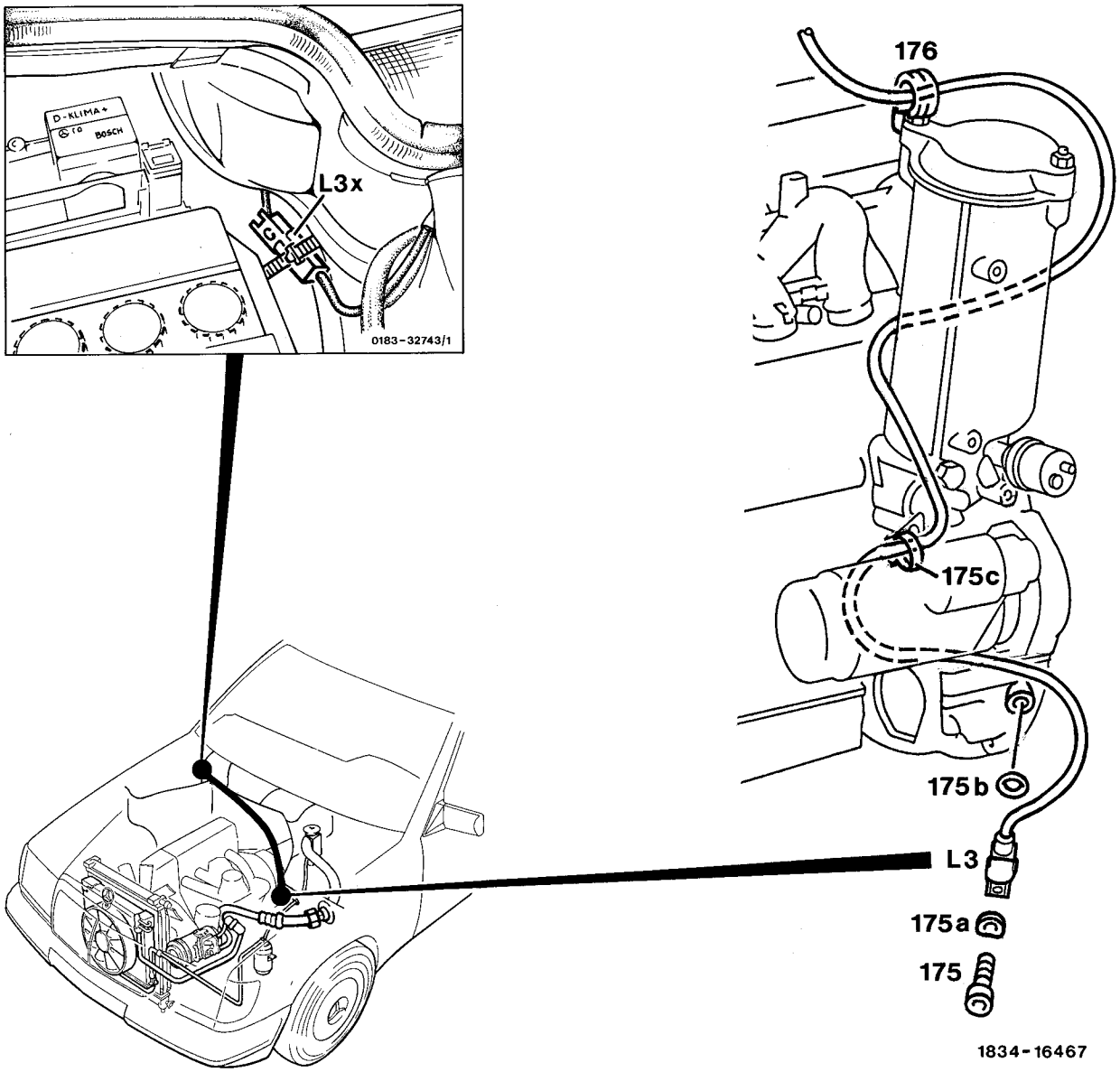

Cover on bulkhead	loosen.
2-pole plug connection (L3x)	disconnect.
Clamp (176)	loosen.
Clamp (175c)	unclip.
Lead from speed sensor downward	pull out.
Screw (175)	screw out and pull speed sensor (L3) out of oil pan.
Resistance of speed sensor	test; specification: 1.9 ± 0.2 kΩ
Reinstall in opposite order	replace O-ring (175b).

Contents, programmed repairs, air conditioning system I
Air conditioning/automatic temperature control model 124

No.	Subject	Model or assembly	Notes
83-87071	A/C compressor does not switch on.	All models	–
83-87101	Imprecise customer complaint.	All models	–
83-87102	Air outlet temperature too low when maximum heating stage required.	All models	–
83-87103	Heater does not heat up passenger compartment to temperature of approx. 22 °C at head level with adjustment wheel set to 22 °C and at outside temperatures below 0 °C.	All models	–
83-87104	Heater does not heat up to comfortable temperature. Air outlet temperature increases and decreases slowly at regular intervals.	All models	–
83-87105	Heater only heats occasionally or heats continuously at maximum capacity.	All models	–
83-87108	Poor refrigeration capacity.	All models	–
83-87109	Refrigeration capacity decreases after longer period. Moreover air quantity from center and side nozzles decreases. Ice vapor comes out of center nozzles.	All models	–
83-87112	Screeching noise from area of evaporator at idle immediately after A/C compressor switches on.	All models	–

83-87071 A/C compressor does not switch on. All models –

1st cause
System not charged with sufficient quantity of A/C (R12) (possible leak) or pressure switch (S31) defective.
Remedy
Allow engine to run at idle. Switch on function switch , disconnect both plugs on pressure switch (S31/1) and connect with one another. If the compressor runs, check fluid level in air conditioner, eliminate leakage if required. If the fluid level is O.K., replace pressure switch (S31/1).
If the compressor does not run, see cause 2.

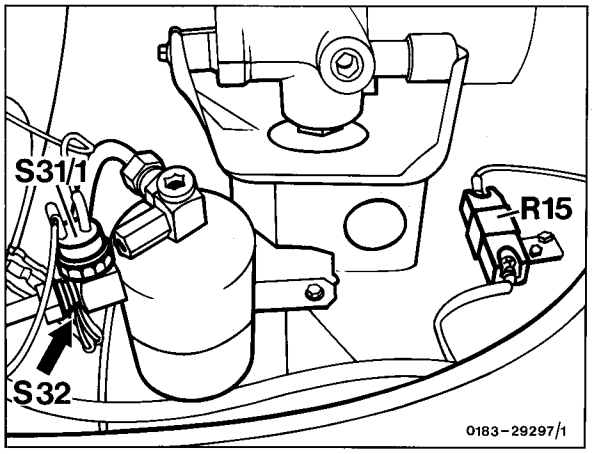

2nd cause
Malfunction in actuation from control unit or control panel to compressor shutoff control unit.
Remedy
Check electrical components in air-conditioner/automatic temperature control (83-504).

3rd cause
Compressor shutoff not functioning.
Remedy
Check compressor shutoff (83-505).

83-87101 Imprecise customer complaint. All models –

Tests
Check control quality and heating capacity (83-502).
In the event of deviations from the specified functions check electrical components in air-conditioner/automatic temperature control (83-504).

83-87102	Air outlet temperature too low when maximum heating stage required.	All models	–

1st cause
Circulation pump not running.
Remedy
Check actuation and current consumption (max. 0.8 amps) of circulation pump, replace circulation pump if required.

2nd cause
Duo valve defective.
Remedy
Check duo valve, replace if required.

3rd cause
Heat exchanger dirty or defective.
Remedy
Flush cooling system (20-015), replace heat exchanger if required.

83-87103	Heater does not heat up passenger compartment to temperature of approx. 22 °C at head level with adjustment wheel set to 22 °C and at outside temperatures below 0 °C.	All models	–

1st cause
Electrical malfunction in system.
Remedy
Check electrical components in air-conditioner/automatic temperature control (83-504) and replace defective component, if required.

2nd cause
Heat exchanger dirty or defective.
Remedy
Flush heating system (83-502), flush cooling system if required (20-015) and replace heat exchanger if required.

83-87104	Heater does not heat up to comfortable temperature. Air outlet temperature increases and decreases slowly at regular intervals.	All models	–

Cause
Ventilation of interior air temperature sensor not functioning properly.
Remedy
Check ventilation blower for interior air temperature sensor. For this purpose switch on ignition and position a small piece of paper approx. 1 cm^2 (arrow) on grate for interior temperature sensor. The paper should remain in place. If not remove glove box, check ventilation blower and replace if required.

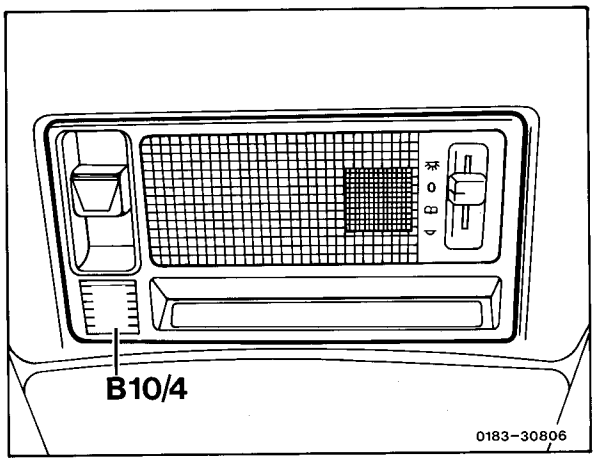

83-87105	Heater only heats occasionally or heats continuously at maximum capacity.	All models	–

1st cause
Discontinuity in one of the temperature sensors or leads.
Remedy
Check electrical components in airconditioner/automatic temperature control (93-504) and replace defective component, if required.

2nd cause
Poor contact due to widened sockets.
Remedy
Check all sockets from cable harness on control unit or control panel on temperature sensors (interior air, heat exchanger, outside air) and on duo valve individually and bend as required.

3rd cause (on vehicles up to 08/87)
Circulation pump current consumption too high (max. 0.8 amps).
Remedy
Check circulation pump current consumption; for this purpose set both adjustment wheels to MAX position, replace circulation pump if required.

83-87108 Poor refrigeration capacity. All models –

1st cause
A/C agent quantity in system too low.
Remedy
Check system for leakage, replace fluid reservoir and refill system.

2nd cause
Expansion valve (82) sticks, is dirty or defective; therefore vacuum too low or too high.
Remedy
Replace expansion valve and fluid reservoir.

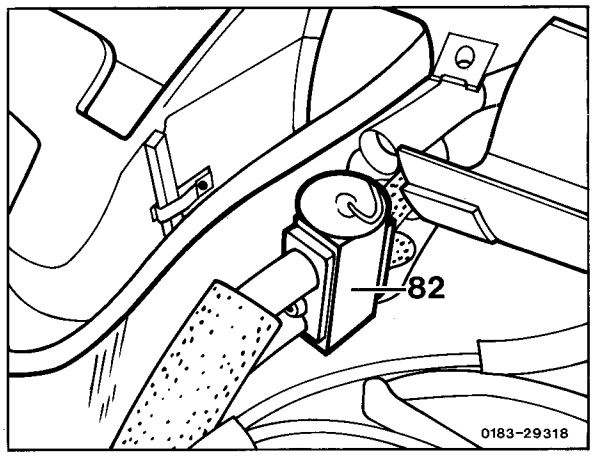

3rd cause
Evaporator temperature sensor (B10/6) defective, therefore A/C compressor switches off too early.
Remedy
Replace evaporator temperature sensor.

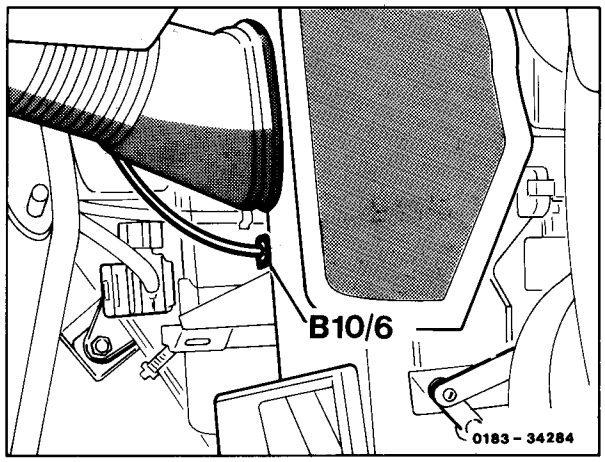

83-87109	Refrigeration capacity decreases after longer period. Moreover air quantity from center and side nozzles decreases. Ice vapor comes out of center nozzles.	All models	–

1st cause
Short circuit in evaporator temperature sensor (B10/6).
Remedy
Replace evaporator temperature sensor.

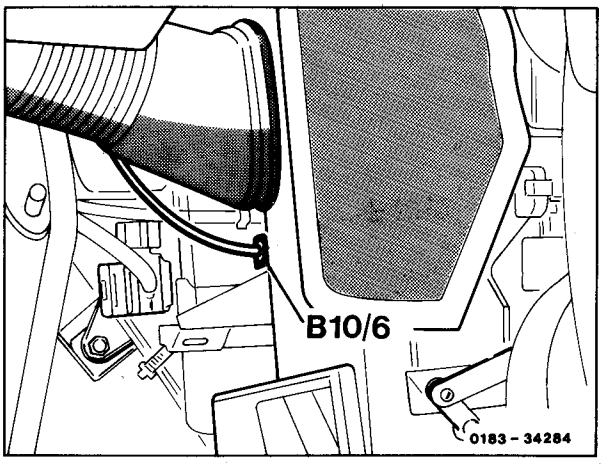

2nd cause
Expansion valve (82) defective.
Remedy
Replace expansion valve.

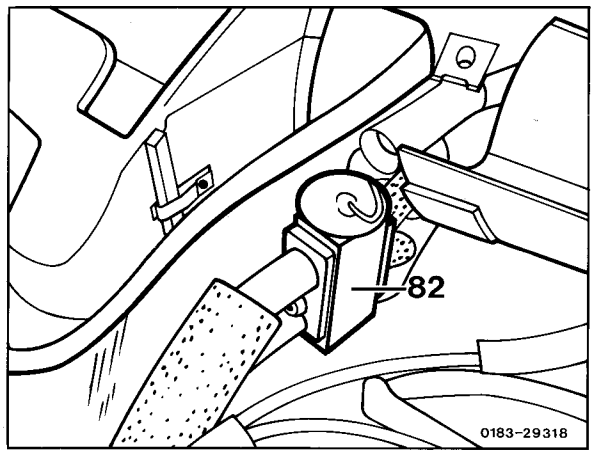

83-87112	Screeching noise from area of evaporator at idle immediately after A/C compressor switches on.	All models	–

Cause
Expansion valve (82) defective.
Remedy
Replace expansion valve.

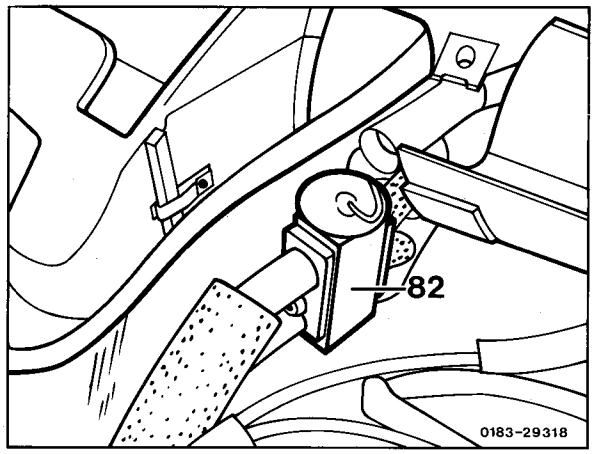

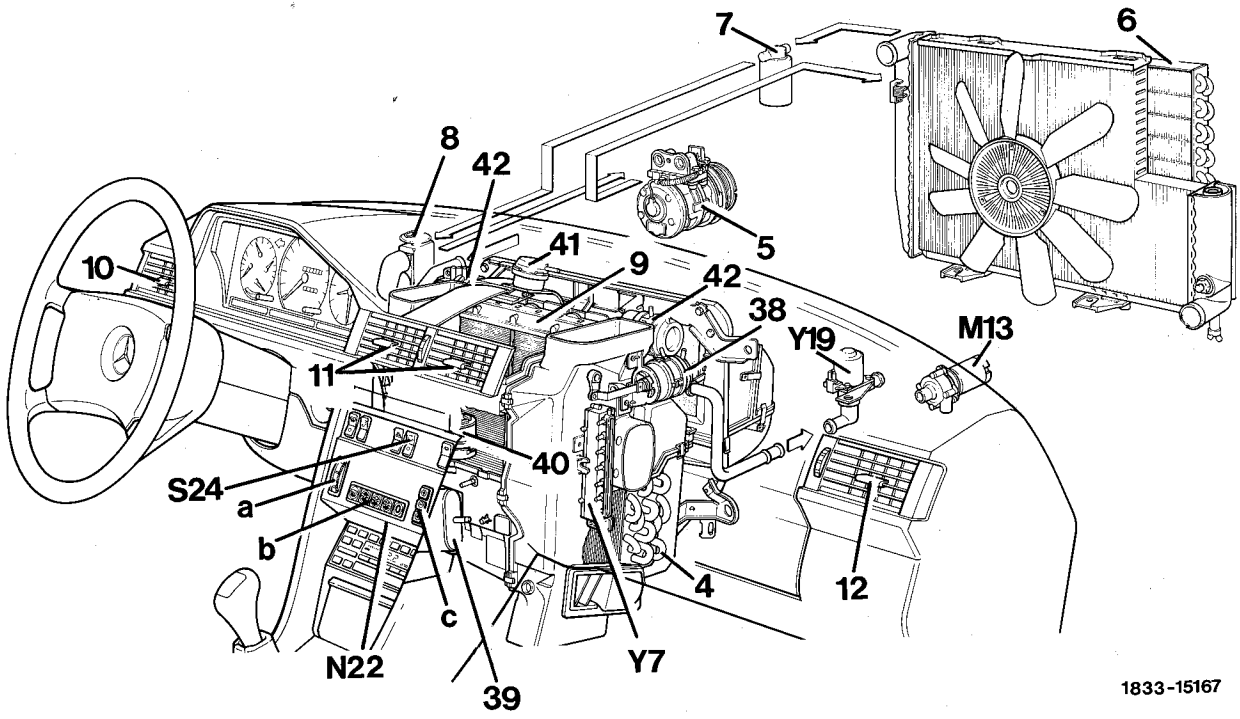

Components of the automatic climate control

4	Evaporator
5	Refrigerant compressor
6	Condenser
7	Fluid tank
8	Expansion valve
9	Heat exchanger
10	Air entry left
11	Air entry center
12	Air entry right
38	Vacuum element for defroster nozzle flaps
39	Vacuum element for footwell flaps
40	Vacuum element for center nozzle flap
41	Vacuum element for diverter air flap
42	Vacuum element for fresh air/circulated air flap
M13	Circulating pump
N22	Automatic climate control unit
a	Temperature selector wheel
b	Pushbutton switch
c	Blower switch
S24	Fresh/recirculated air switch
Y7	Switchover valve block
Y19	Mono valve

A. General

The models 124 are provided with an automatic climate control as special equipment. It operates according to the same principle as that in the models 123, except for the continuous blower control.

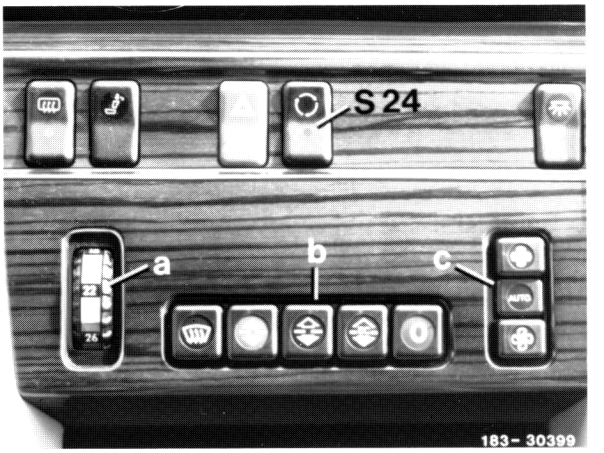

Control unit comprising:

a	Temperature selector wheel
b	Pushbutton switch with 5 functions
c	Blower switch
S24	Fresh/recirculated air switch

B. Automatic climate control unit (N22)

This consists of a temperature selector wheel (a), pushbutton switch (b) with five pushbuttons and the blower switch (c).

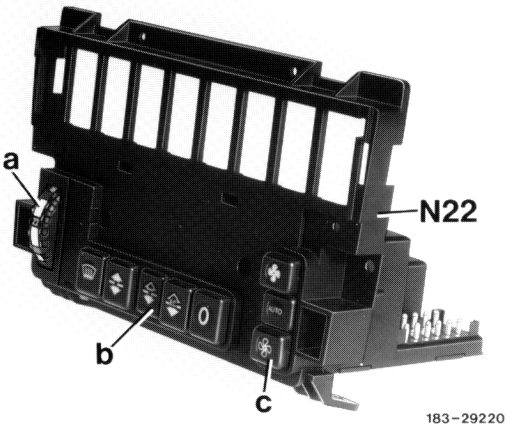

The control unit houses electronics with the following functions:

1. Control of the interior temperature and activation of the refrigerant compressor with ground via the control unit compressor shut-off.
2. Control of the blower control unit.
3. Control of the circulated air operation.
4. Control of the air flaps.

The respective outputs of the control unit are designed short-circuit proof. This feature protects the conductor boards in the control unit during a short-circuit.

The function of the short-circuit safety feature is designed differently by the respective manufacturers of the control unit.

83.0742-600/2

Kammerer control unit
During a short-circuit, this unit switches the respective output off and immediately on again as soon as the short-circuit no longer exists.

Bosch control unit
During short-circuit, switches off all outputs except blower control. After the short-circuit has been rectified, all outputs are switched on again within 30 seconds.

C. Electronic blower regulator (N29)

The electronic blower regulator is a transistor-controlled constant current regulator. It consists of a heat sink and an electronic unit and regulates the blower motor continuously. During a short-circuit or excessive temperature, the blower regulator switches off the blower motor.

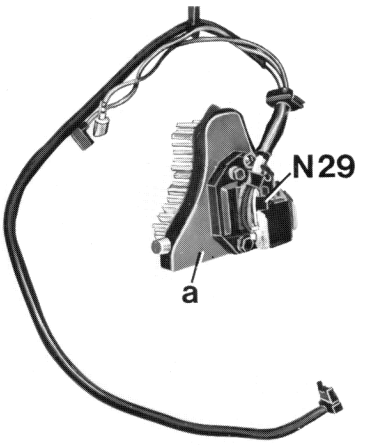

183-30683

The blower motor (N29) is located in the blower housing behind the blower motor. With the blower motor running, the blower regulator is therefore constantly cooled.

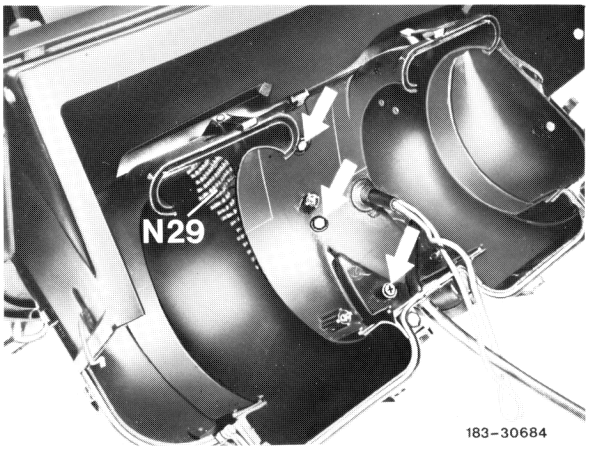

183-30684

D. Function of blower regulation with various function selections

The blower regulator permits a continuous blower speed regulation. The blower regulator is connected to the main fuse box and ground and is supplied with battery voltage as soon as the ignition has been switched on. In addition, the blower regulator is connected to the automatic climate control unit by means of a control cable. Depending on the function selection of the blower switch, the control unit continuously sends a control voltage of between 0.4 to 9 volt to the blower regulator. The regulator continuously supplies a current between 2.0 to 28 amps to the blower motor, in this way regulating the blower speed.

Control voltage at various function selections of the blower switch:

Fixed minimum speed: approx. 1.0 volt (5 amps blower current).

Automatic stage: approx. 1.4 to 4.7 volt (7.5 to 22 amps blower current).

Fixed maximum speed: above 6 volt (28 amps blower current).

With all functions of the blower switch, except when the system has switched to 100% recirculated air, the control voltages are influenced by the driving speed of the vehicle by means of the Hall sensor (B6) on the speedometer. Up to a speed of 200 km/h the control voltage is continuously reduced by a maximum of 0.6 volt. This reduces somewhat the air volume increase resulting from the dynamic pressure.

With the blower switch in the automatic function, the control voltages are additionally influenced:

- By the nominal and actual values of the interior temperature (via temperature sensor interior air and the temperature selector wheel).
- By the outside temperature (via the outside air temperature sensor on the blower housing).
- By the operating condition of the system (heating or cooling).
- By the coolant temperature (up to 03/87 by the temperature sensor coolant indication B13, as of 09/87 by the temperature sensor B11/7 or B10/8).

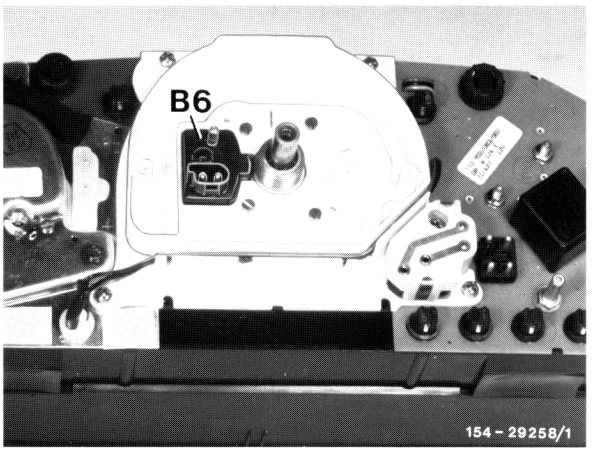

Arrangement of temperature sensor coolant indication (B13)

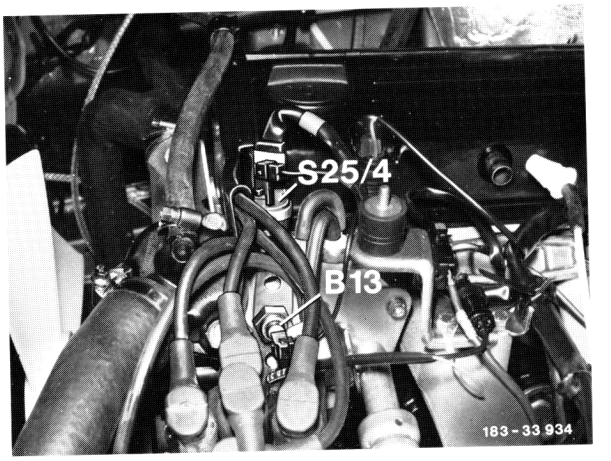

Engine 102 up to 08/87

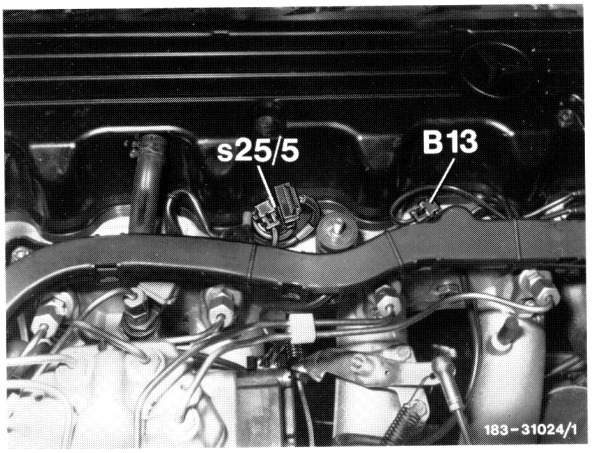

Engine 103 up to 08/87

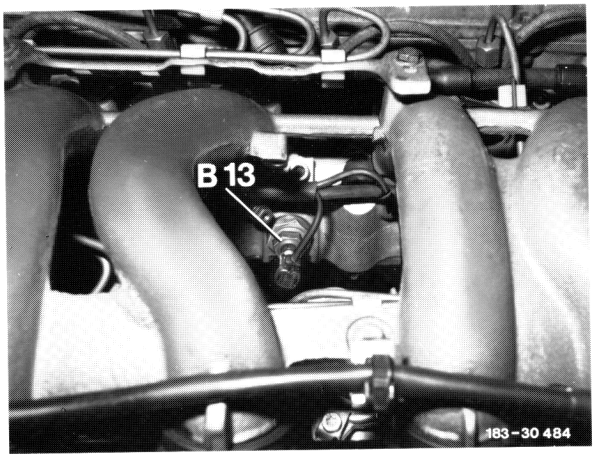

Engines 601, 602 and 603 up to 08/87

Arrangement of temperature sensor coolant (B11/7 or B10/8)

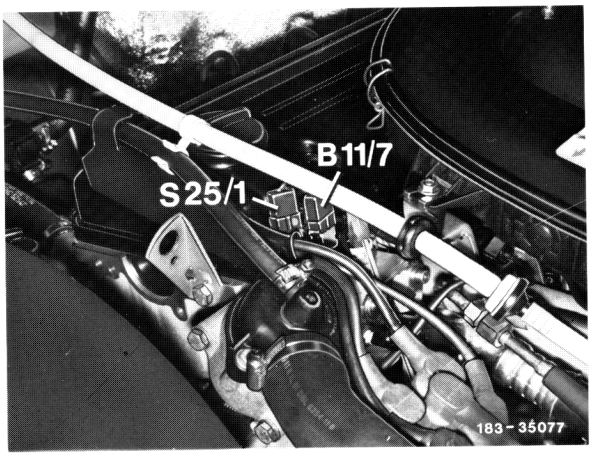

Engine 102 as of 09/87

83.0742-600/5

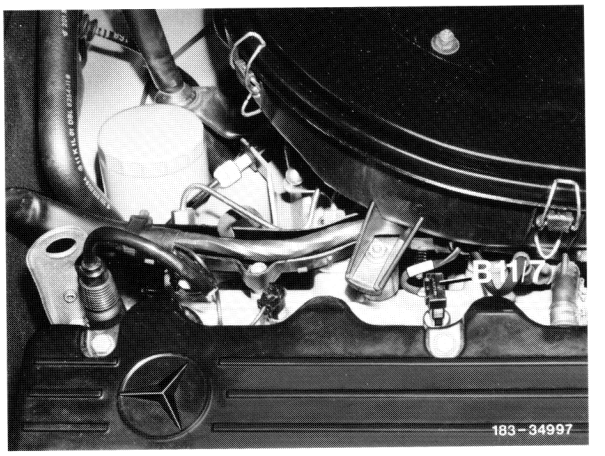

Engine 103 as of 09/87

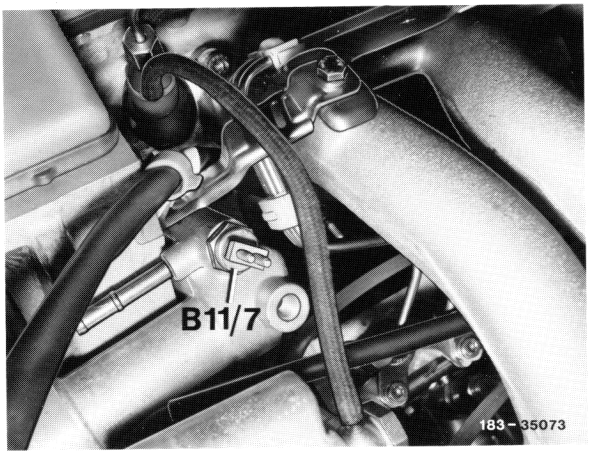

Engines 601, 602 and 603 as of 09/87

Blower regulator with the function selection or and AUTO.

a) With coolant temperatures below 40°C the blower does not start if the outside temperature is below 20°C and the interior temperature is lower than the temperature adjusted on the temperature selector wheel (cold engine lockout via temperature sensor coolant indication B13 up to 08/87 or B11/7 or B10/8 as of 09/87).

As from a coolant temperature of 40°C up to 80°C, the control voltage is increased from 1.2 volt (when selecting the function or 2.0 volt) up to a maximum of 4.7 volt, resulting in a continuous increase of the blower speed.

b) With coolant temperatures below 40°C the blower starts **immediately** if the outside temperature is above 20°C or the interior temperature is higher than the temperature adjusted on the temperature selector wheel.

The control voltage of the blower regulator is dependent on the interior or outside temperature (up to a maximum of 4.7 volt).

Blower regulation with the function selection and or

The blower starts immediately below a coolant temperature of 40°C. After switching over to or or AUTO, the blower continues and can only be switched off by means of the 0 button.

Blower regulation with the function selection and AUTO

The blower starts immediately below a coolant temperature of 40°C and, also as a function of the coolant temperature, is regulated upwards, however not up to the maximum blower output. The control voltage is between 1.4 to 5 volt. If the fixed maximum speed switch is also pressed on the blower switch, the blower runs with a maximum speed independent of the coolant temperature (via 6 volt control voltage and approx. 28 amps blower current).

E. Control of air flaps and air flow

The control of the air flaps is influenced by the temperature sensor for the heat exchanger (B10/1).

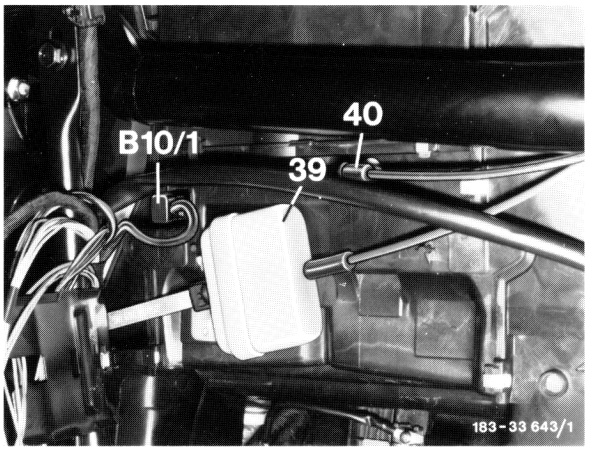

The mode change only occurs when the functions or are selected.
The mode change is the switching over of the air flaps during the transition from heating to cooling as well as from cooling to heating. During this process several air flaps open and the transition is less perceptible.

The control of the air flaps is shown in the following table:

Operating condition of the system		Temperature on temperature sensor heat exchanger as of approx. °C over a period of at least 15s	Air flap positions: Defroster nozzles[1])	Center nozzle	Footwell nozzles
	Heating	40 °C	Leak air	closed	open
Direction cooling	Mode change	31 °C	opens	closed	open
		29 °C	open	opens	open
		26 °C	open	open	closes
		15 °C	closes (leak air)	open	closed
		10 °C	closes (closed)	open	closed
	Cooling	8 °C	closed	open	closed
Direction heating	Mode change	15 °C	opens (leak air)	open	closed
		34 °C	Leak air	open	opens
		37 °C	Leak air	closes	open
	Heating	40 °C	Leak air	closed	open

[1]) On model 124.0 as of 08/87 and model 124/1 as of 08/85, the defroster nozzle flaps remain fully opened for approx. 30 seconds after starting the engine. This largely prevents misting up of the windshield.

83.0742-600/8

Control of the fresh/recirculated air flap

The fresh/recirculated air flap is controlled:

- Manually via the recirculated air switch (S24, 100% recirculated air).
- Manually by the automatic climate control unit (80% or 100% recirculated air).

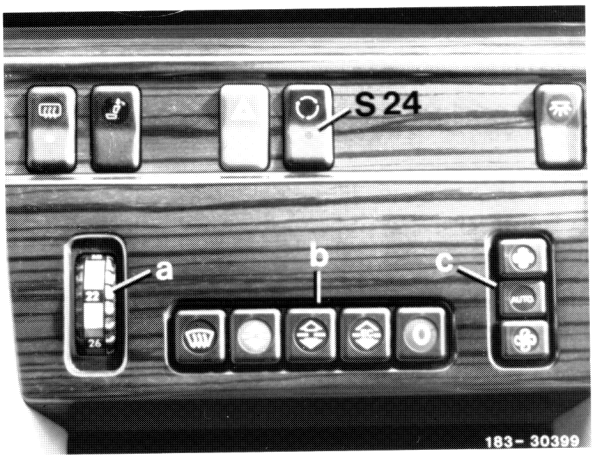

Function of the recirculated air operation

Manual recirculated air operation (100% with air pollution).

In the function selection or at outside temperatures above 7°C provided that the refrigerant compressor will still be switched on, the recirculated air flap will switch to fresh air or automatic operation after 30 minutes following the actuation of the recirculated air switch. If the outside air temperature is below 7°C and the compressor will no longer cut in, or with the function selection , fresh air or automatic operation is switched on even after 5 minutes. With renewed actuation of the recirculated air switch, this process is repeated.

If the recirculated air switch or the ignition is switched off or the function is selected, the recirculated air flap moves into the fresh air position.

Automatic recirculated air operation (to improve the cooling capacity).

The automatic recirculated air operation is dependent on the interior temperature (temperature sensor interior air) and on the temperature differential of the temperature adjusted on the temperature selector wheel and the outside temperature (temperature sensor outside air).

This means that, the higher the interior temperature or the greater the temperature differential, the earlier the system will switch to recirculated air operation, see figure recirculated air flap control.

Note

1. The operation with 100% recirculated air is limited to 30 minutes. Irrespective of the temperature differential, the system will thereafter change to 80% recirculated air.

2. Manually it is possible to switch the system to 100% recirculated air for an unlimited period, if with outside temperatures above 20°C the temperature selector wheel is engaged in "Min" position.

Control of the recirculated air flap (when adjusting the temperature selector wheel 22)

Temperature on the temperature sensor interior air °C	Temperature sensor outside air °C				
	Outside temperature rises Recirculated air flap in position			Outside temperature reduces Recirculated air flap in position	
	Fresh air	Recirculated air 80%	Recirculated air 100% [1]	Recirculated air	Fresh air
+25	< +30	from +30 to +45	> +45	+40 to +27	< +27
+30	< +28	from +28 to +41	> +41	+36 to +25	< +25
+35	< +27	from +27 to +38	> +38	+32 to +24	< +24
+40	< +25	from +25 to +35	> +35	+29 to +22	< +22

[1]) For 30 minutes. These 30 minutes are repeated after the ignition has been switched off and on again.
> warmer than
< colder than

Control of the diverter air flap

The function of the diverter air flap is dependent:

- On the temperature adjusted on the temperature selector wheel and on the interior room temperature.
- On the outside temperature.

The higher the outside temperature, the sooner will the diverter air flap be switched on, regardless of the recirculated air operation.

Air flow

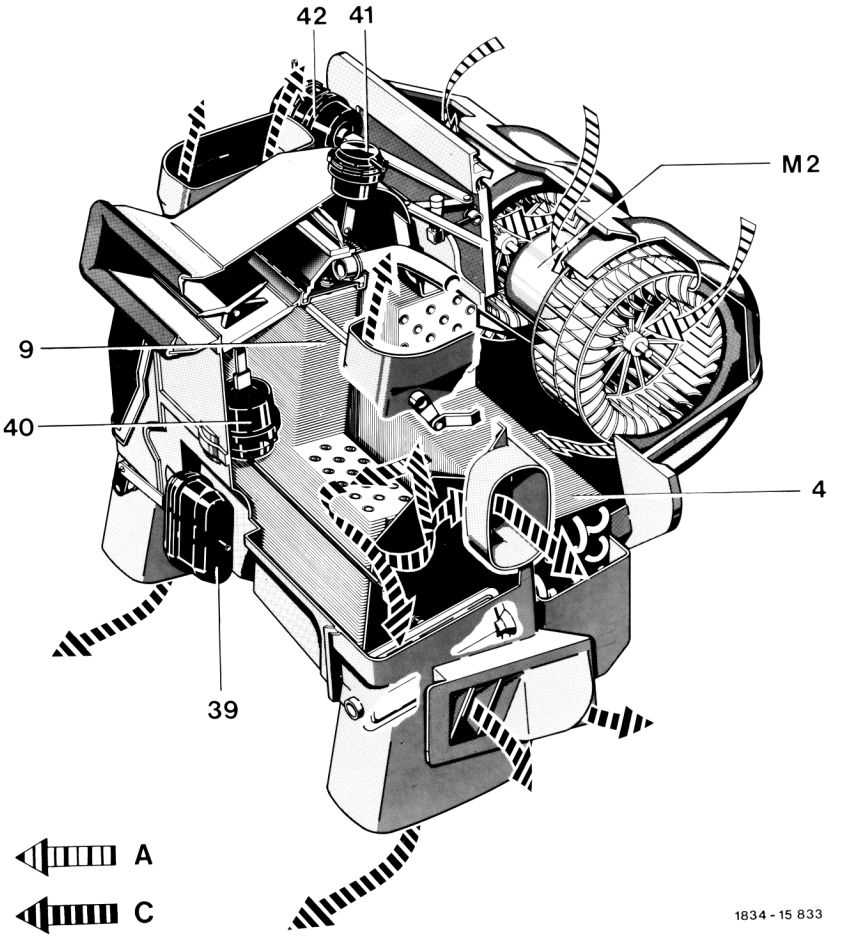

A Fresh air
C Heated air

1. Heating operation and fresh air

4	Evaporator
9	Heat exchanger
39	Vacuum element for footwell flaps (flaps open)
40	Vacuum element for center nozzle flap (flap closed)
41	Vacuum element for diverter air flap (flap closed)
42	Vacuum element for fresh/recirculated air flap (flap in fresh air position)
M2	Blower motor

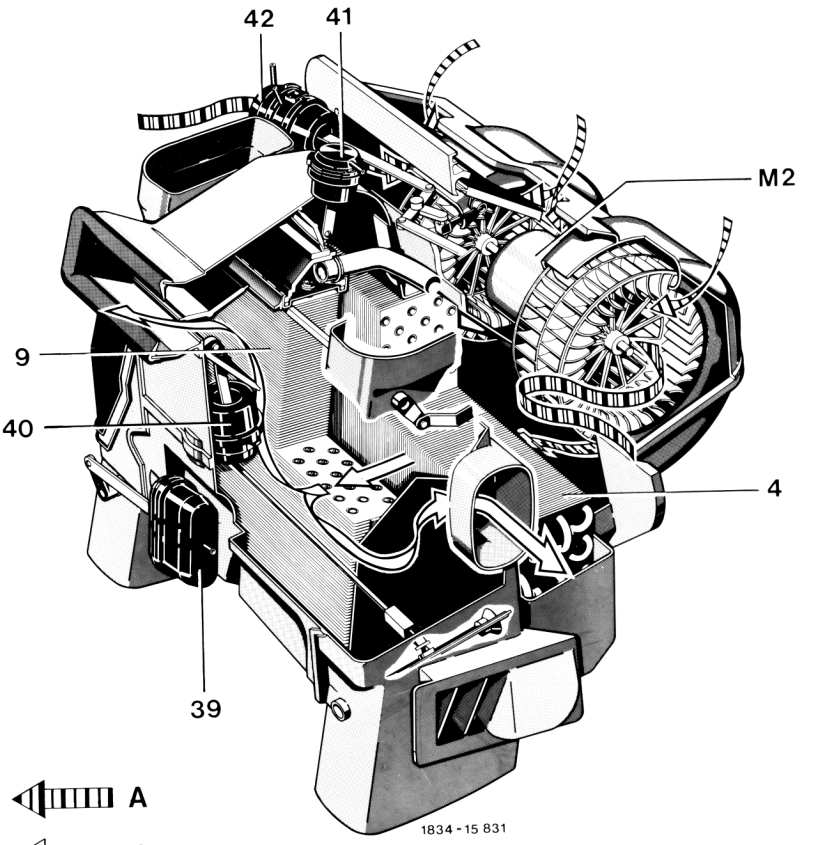

A Fresh air
B Cooled air
D Recirculated air

2. Cooling operation and 80% recirculated air

4	Evaporator
9	Heat exchanger
39	Vacuum element for footwell flaps (flaps closed)
40	Vacuum element for center nozzle flap (flap open)
41	Vacuum element for diverter air flap (flap closed)
42	Vacuum element for fresh/recirculated air flap (flap in position 80% recirculated air)
M2	Blower motor

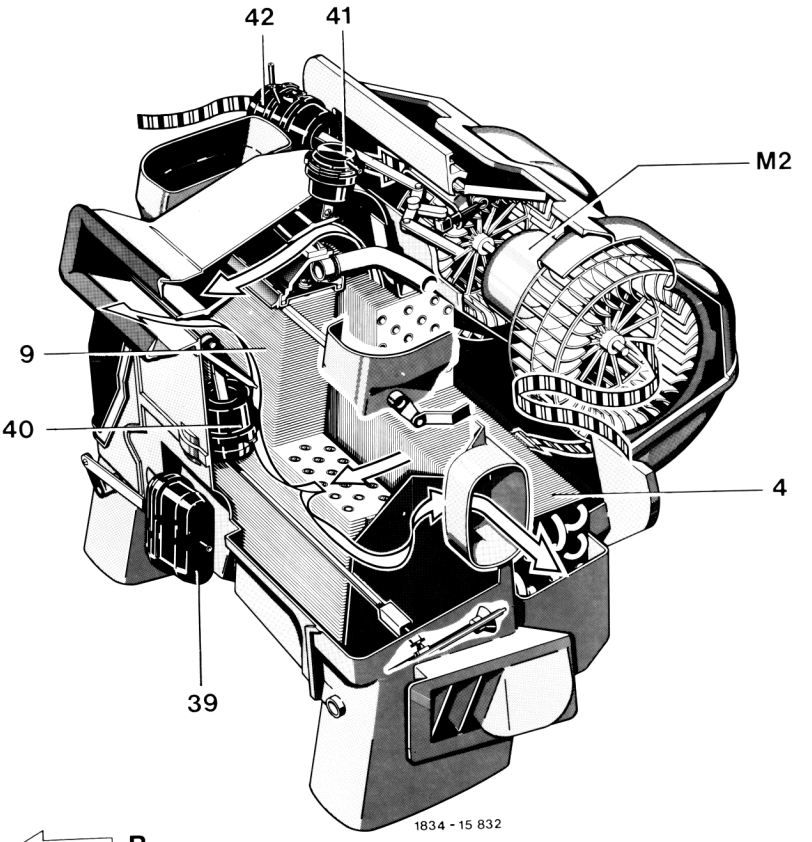

B Cooled air
D Recirculated air

3. Cooling operation and 100% recirculated air

4	Evaporator
9	Heat exchanger
39	Vacuum element for footwell flaps (flaps closed)
40	Vacuum element for center nozzle flap (flap open)
41	Vacuum element for diverter air flap (flap open)
42	Vacuum element for fresh/recirculated air flap (flap in position 100% recirculated air)
M2	Blower motor

It is possible that dust filters have been fitted since 04/93. Dust filters have be fitted as standard in conjunction with automatic climate control as of 06/93.

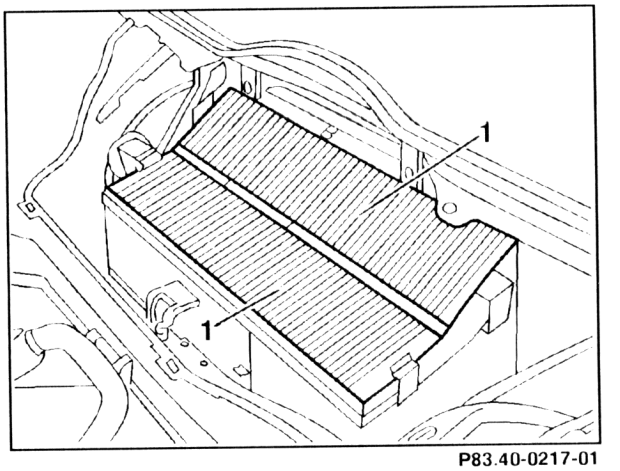

P83.40-0217-01

Arrangement of dust filter (1, wiper system removed)

F. Temperature sensor interior air and ventilation blower

The temperature sensor interior air (B10/4) senses the temperature in the passenger compartment and changes its resistance correspondingly. This resistance value is fed into the automatic climate control unit.

Arrangement temperature sensor interior air (B10/4)

up to 07/85

as of 08/85

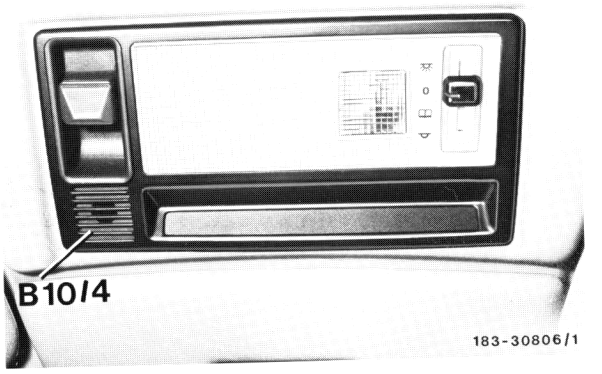

The ventilation blower (M9) - arranged below the lateral nozzle right, on RHD vehicles left - is connected with the temperature sensor interior air by a hose and is in constant operation with the ignition switched on. This increases the regulating accuracy of the temperature in the passenger compartment.

83.0742-600/14

Temperature sensor heat exchanger

The temperature sensor for the heat exchanger (B10/1) is located in the housing of the heat exchanger.

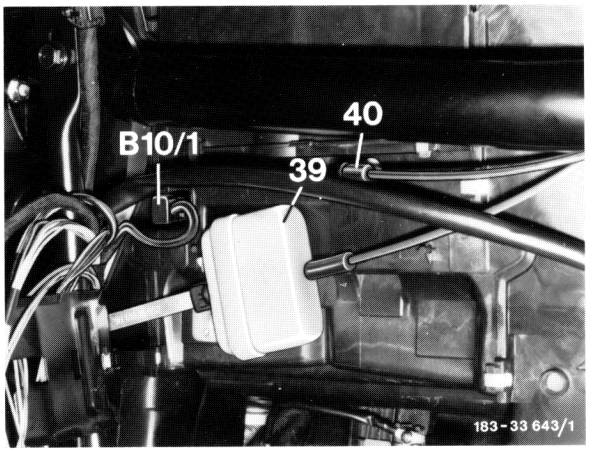

Temperature sensor evaporator

The temperature sensor evaporator (B10/6) is located in the air flow behind the evaporator. Depending on the temperature on the evaporator, it feeds its resistance value to the control unit. This temperature sensor causes the compressor to switch more frequently on and off in cooling operating mode. Consequently there is only a minor fluctuation of the nozzle outlet air temperature. In addition, it prevents icing-up of the evaporator.

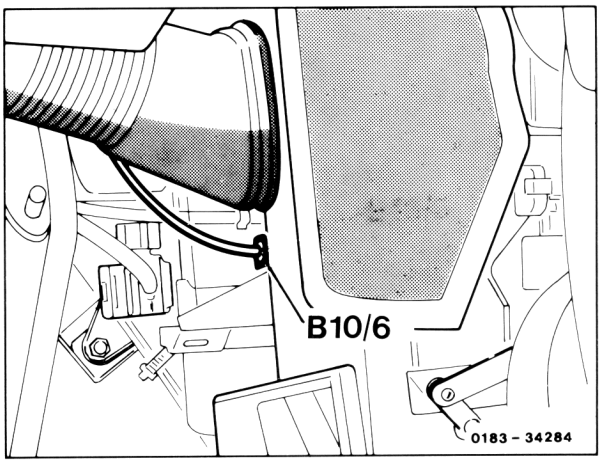

Note

On vehicles as of 09/87, the refrigerant compressor is switched off by the control unit after 2 minutes of operation if there is a short-circuit in the temperature sensor evaporator (resistance value below 2.5 kΩ). This prevents continuous refrigerant compressor operation and subsequent icing-up of the evaporator. The refrigerant compressor is only switched on again after the engine has been switched off and on again.

Temperature sensor outside air

The temperature sensor outside air (B10/5) ensures an accurate temperature regulation.

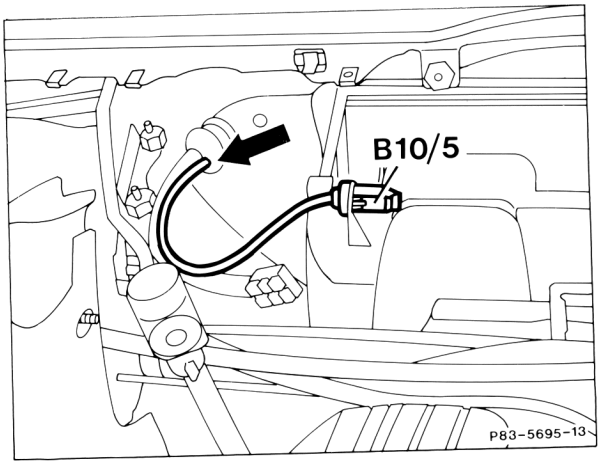

83.0742-600/15

G. Arrangement of vacuum elements and switchover valve block for the control of the air flaps, mono valve and circulating pump

The switchover valve block (Y7) consists of a unit with 7 switchover valves.

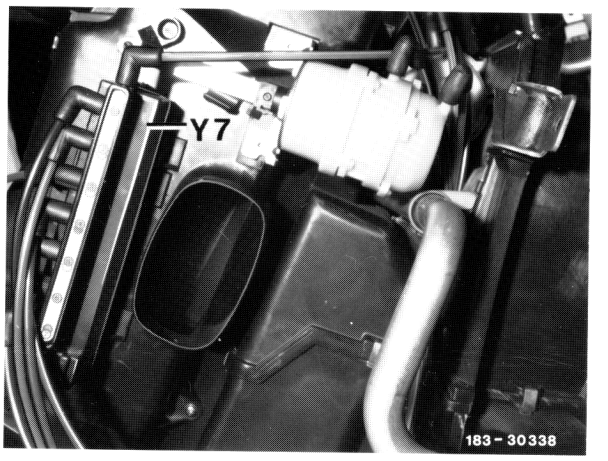

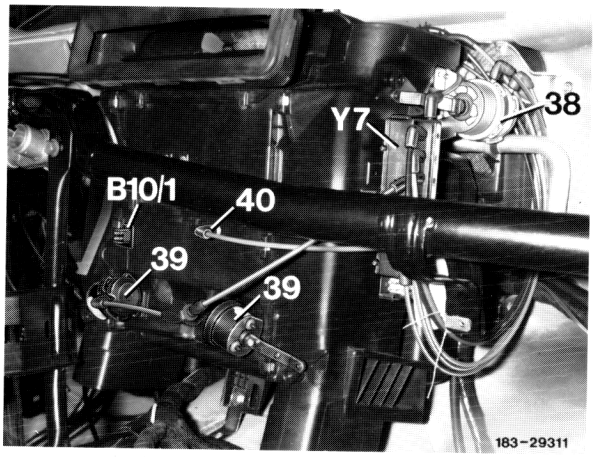

38 Vacuum element for defroster nozzle flaps (without vacuum, flaps open)

39 Vacuum element for footwell flaps up to 8/86 (without vacuum, flaps closed)

40 Connection vacuum element for center nozzle flap (without vacuum, flap closed)

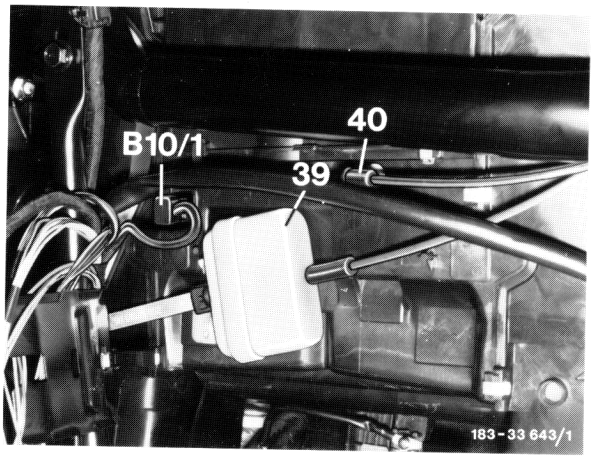

39 Vacuum element for footwell flaps up to 9/86

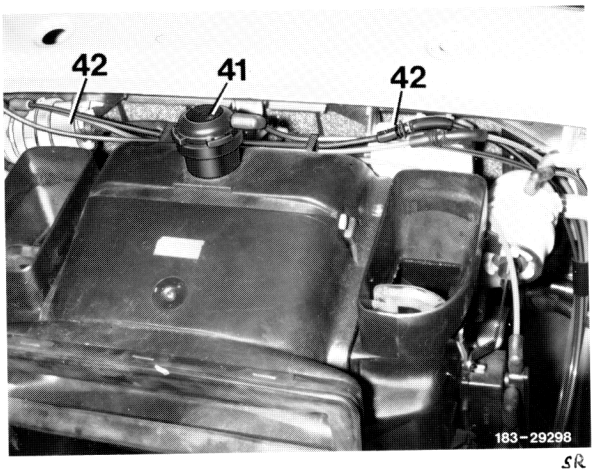

41 Vacuum element for diverter air flap (without vacuum, flap closed)
42 Vacuum element for fresh/recirculated air flap (without vacuum, flap in fresh air position)

Mono valve and heating water circulating pump up to 11/92

The mono valve (Y19) is located in the return of the heating water circuit and controls the water flow through the heat exchanger. Without voltage it is fully open and closed if voltage is present.

A circulating pump is located in the return flow of the heating water circuit. The circulating pump (M13) operates in the heating mode, if the mono valve is fully open or cycles in control range.

As of 12/92, the mono valve and the heating water circulating pump are combined in the heating system supply unit (A31).

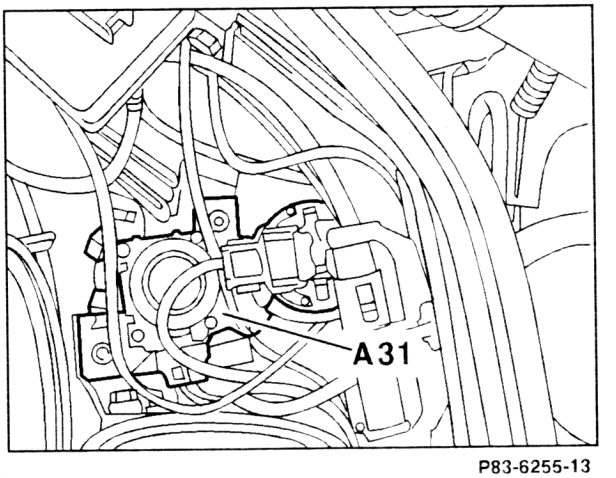

H. Arrangement of plug connectors (X26, X26/6 and X64) on cable harness

The plug connector (X26) is located on the base of the fuse box. This connector serves to direct the refrigerant compressor activation, the voltage supply for the compressor shut-off control unit and the auxiliary fan control.

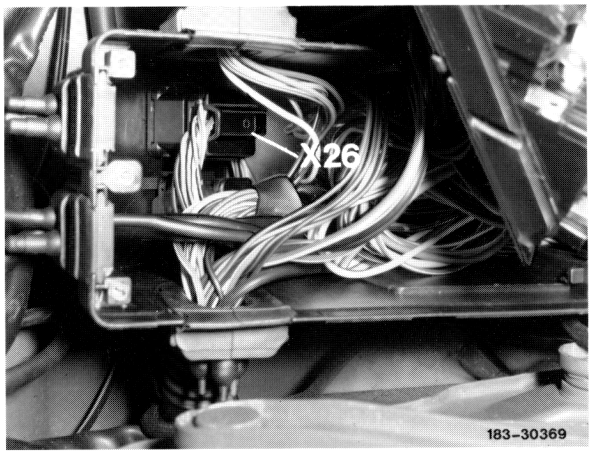

As of 09/87, a 3-pole connector (X26/6) is located in the fuse and relay box. Activation of the temperature sensor coolant and the relay for the auxiliary fan 2nd stage is directed via this connector.

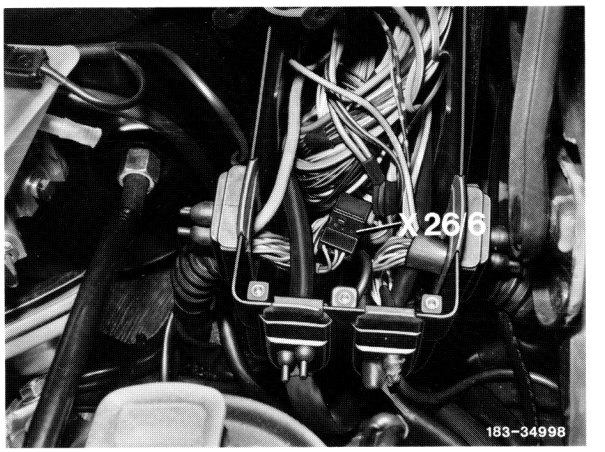

The connector (X64) for the electronic blower regulator is located next to the fuse box on the front wall.

I. Refrigerant compressor and function of the compressor shut-off

The rotary swash-plate refrigerant compressor, make Nippondenso, is installed in all models 124.
The filling capacity of the air conditioner is 1.1 kg refrigerant R12.
If the compressor labors, it is switched off to protect the single-belt drive.

Arrangement refrigerant compressor (143)

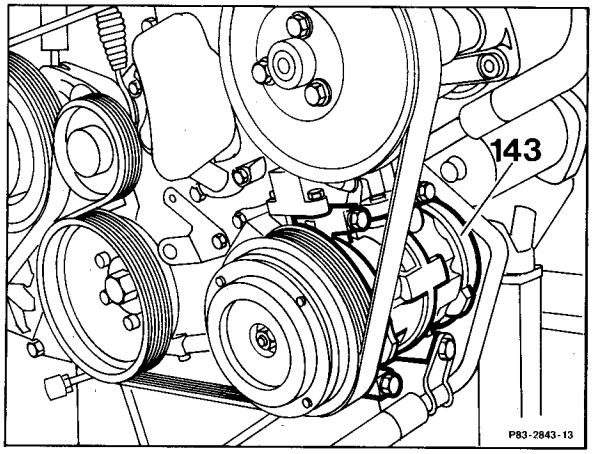

on the diesel engine

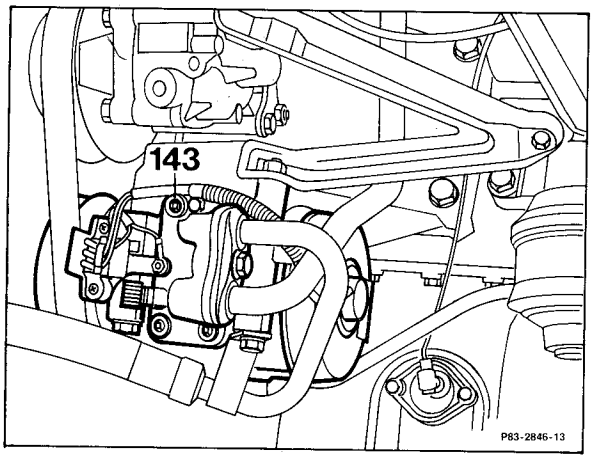

on the gasoline engine

Function of the compressor shut-off

General

In order to protect the single-belt drive, the electromagnetic coupling is switched off via a control unit for instance if the refrigerant compressor seizes up.

Layout of the compressor shut-off circuit:

1. Speed sensor
2. Control unit
3. Microswitch (only on vehicles with diesel engine and automatic transmission)

83.0742-600/19

1. Speed sensor

Speed sensors measure the speeds of the engine and the refrigerant compressor. They consist of a magnetic core and a coil. If the ring gear or the shaft of the refrigerant compressor turns, an alternating voltage is induced in the coils of the speed sensor which is fed into the control unit (N6).

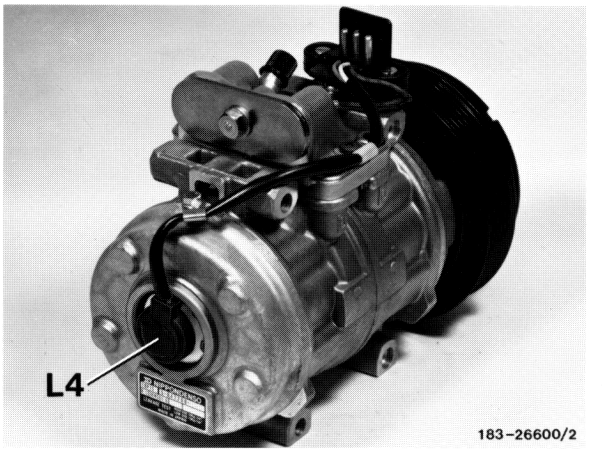

L4 A/C compressor speed sensor

Depending on the speed, the alternating voltage and consequently the frequency rises or drops.

Note

The engine speed on the gasoline engine is tapped off the terminal TD on the cable connector of the diagnostic plug.

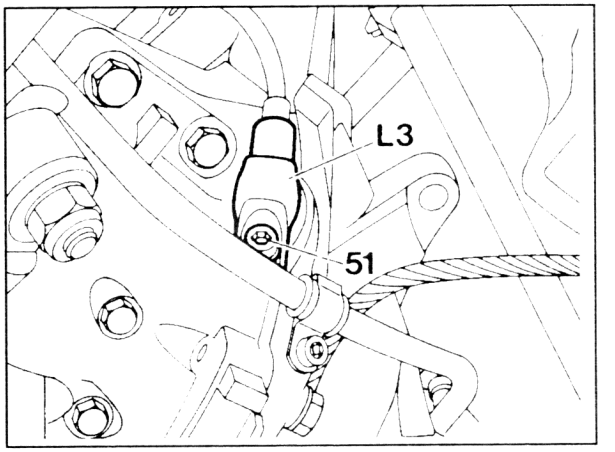

L3 Speed sensor starter ring gear (on the diesel engine on the ring gear of the flywheel)

2. A/C compressor cutoff control unit (N6)

The control unit compares the two speeds of the engine and the refrigerant compressor and switches off the refrigerant compressor at a speed differential of approx. 30%.

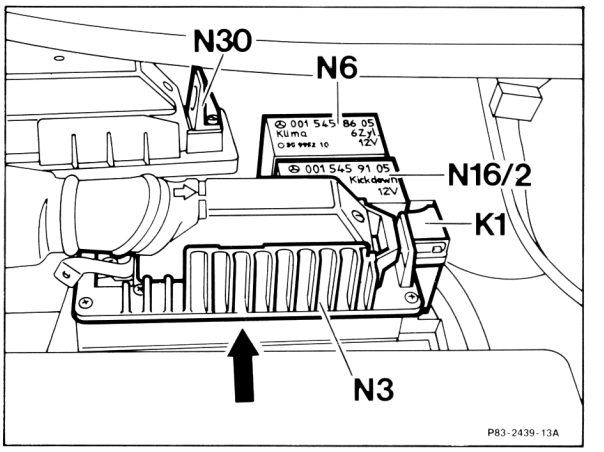

N6 A/C compressor cutoff control unit

Engine systems control unit (N16, engine 104)

In this control unit the familiar components, such as "Fuel pump relay and compressor cutoff", are combined into one unit with extended functions. See 83-605 for testing and fault table.

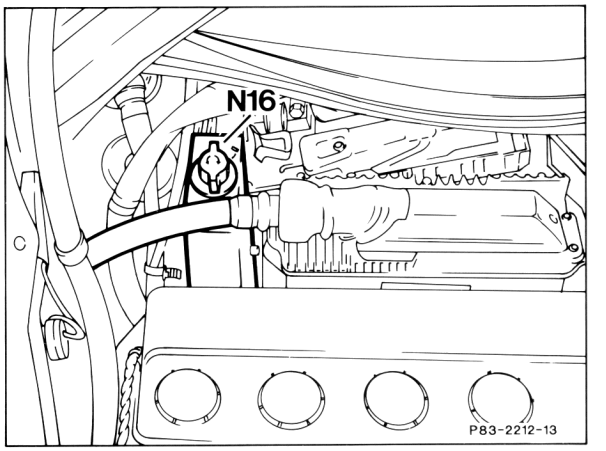

N16 Engine systems control unit (MAS)

83.0742-600/20

Base module (N16/1, engine 119)
In addition to further functions, the compressor cutoff is integrated in this control unit. The electrical control of the refrigerant compressor is, as in the case of the control units (N6/N16), unchanged. (See diagnosis manual for testing).

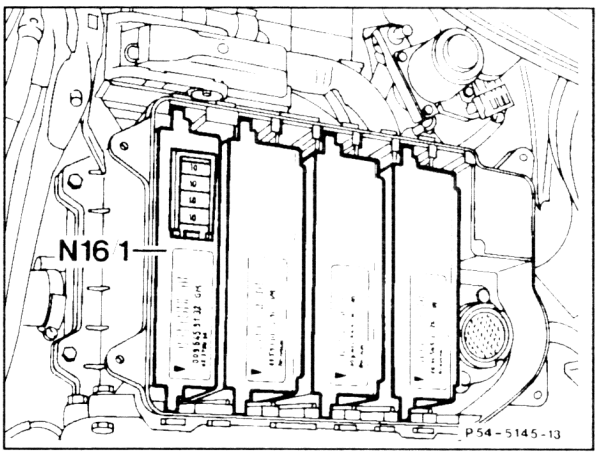

P54-5145-13

N16/1 Base module (GM) in the module box

3. Microswitch (S27/1), on model 124.1 with automatic transmission only
The microswitch switches off the refrigerant compressor at full throttle below an engine speed of approx. 1050 rpm to approx. 2150 rpm via the control unit (N6) (improved starting-off characteristics).

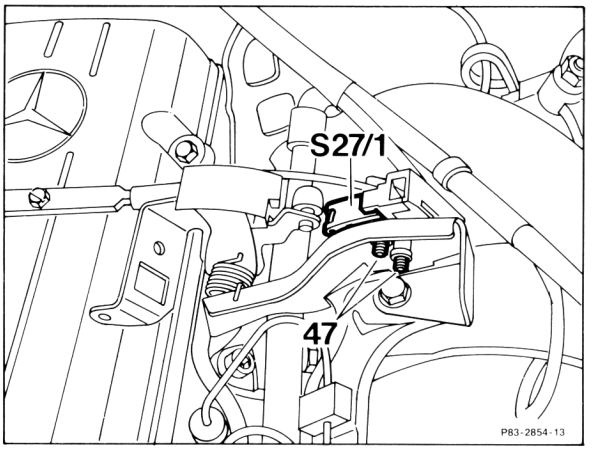

S27/1 Microswitch, model 124.1 except TURBO

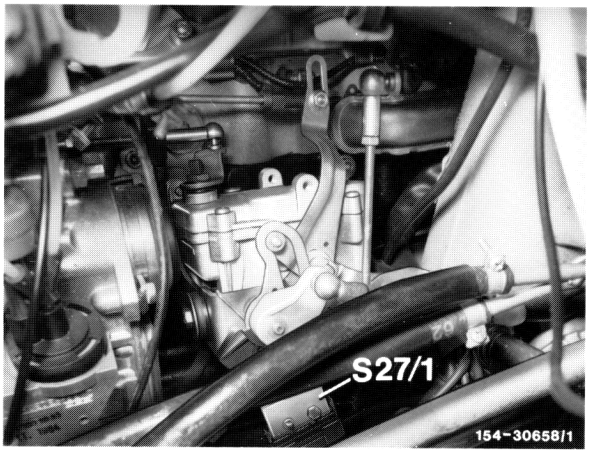

S27/1 Microswitch, model 124.1/3 TURBO

Functional description of the compressor cutoff

On vehicles up to 08/87, the refrigerant compressor is only switched on approx. 10 seconds after reaching an engine speed of approx. 600/min (for engine speed stabilization). On vehicles as of 02/88, the refrigerant compressor on model 124.0 is switched on after 4 seconds and on model 124.1 immediately. The control unit (N6) compares the two speeds of the ring gear and the refrigerant compressor only 2 seconds after the refrigerant compressor has switched on (because of the coupling slip during switching on). If a speed differential of more than 30% exists when the refrigerant compressor switches on, this condition is checked for 200 milliseconds. If the speed differential no longer exists after 200 milliseconds, the refrigerant compressor remains switched on. If the speed differential remains because of hard refrigerant compressor operation, the control unit (N6) immediately switches off the refrigerant compressor. This process is repeated only when the ignition is switched off and the engine will be started.

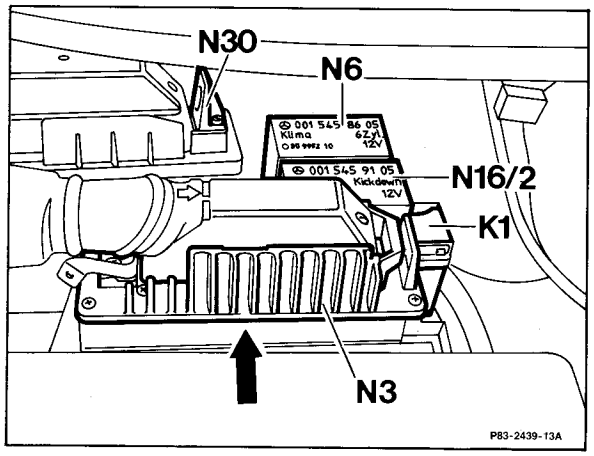

The function has been modified as follows from 07/92:

- o On vehicles with 4-cylinder engines, the refrigerant compressor is switched on 4 sec after starting the engine.
  (Stabilization of the engine speed)
- o On vehicles with 6-cylinder engines, the refrigerant compressor is switched on as soon as the engine is started.
- o If slip is recognised after the refrigerant compressor is switched on, the refrigerant compressor is switched off and after 2 min. the refrigerant compressor is switched on for 4 sec. If the control unit (N6) recognises slip again, the refrigerant compressor is switched off for 2 min. After slip is recognised for a third time, the compressor remains switched off until the ignition is switched off.

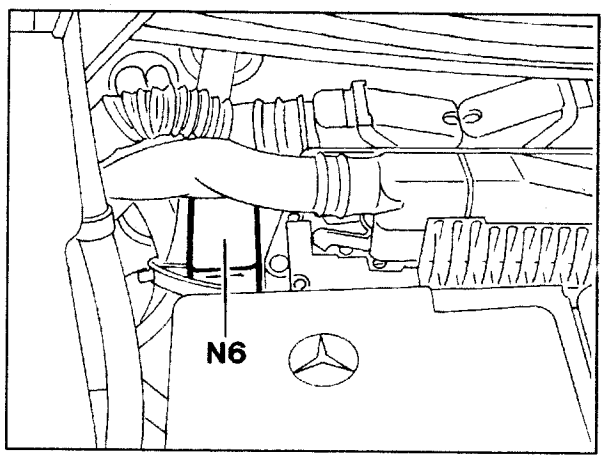

Refrigerant compressor emergency cutoff from 09/85 to 08/87

In order to avoid thermal overload on the engines, the refrigerant compressor is switched off as follows:

a) On vehicles from 09/85 to 08/87 (except with engine 102 without RÜF/KAT and engine 601), the cutoff takes place by means of a temperature switch (S25/3 - S25/11) via the compressor cutoff control unit. At a coolant temperature (see table) the temperature switch is shorted to ground, resulting in the refrigerant compressor being switched off by the compressor cutoff control unit. If the engine temperature drops (see table), the temperature switch opens and the refrigerant compressor is immediately switched on again by the compressor cutoff control unit.

On model 124.1/3 TURBO, the switching on period of the refrigerant compressor is additionally reduced by 50% at approx. 122°C coolant temperature. During this process, the compressor is switched in cycles, i.e. approx. 20 seconds off, 20 seconds on. If the coolant temperature drops to below 117°C, the compressor is again switched on permanently. This control is effected by the temperature sensor coolant indication (B13) via the control unit of the automatic climate control.

Vehicle with engine	Temperature switch	Switching-on temperature approx. °C	Switching-off temperature approx. °C
102 RÜF/KAT	S25/3	110	103
103	S25/5	115	108
602	S25/5	115	108
603	S25/5	115	108
603 TURBO	S25/11	128	118

Arrangement of temperature switch (S25/3)

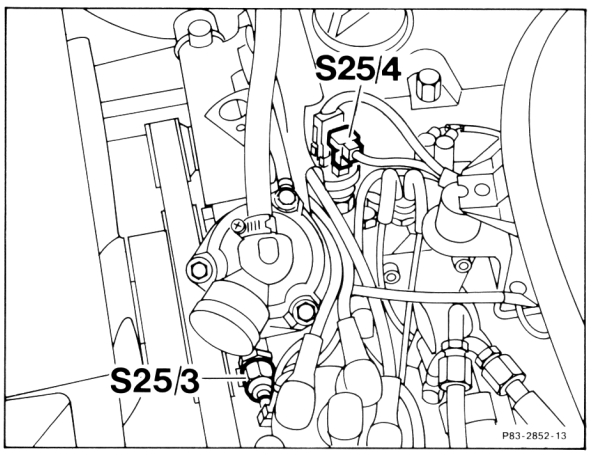

Engine 102 RÜF/KAT up to 08/87

Arrangement of temperature switch (S25/5)

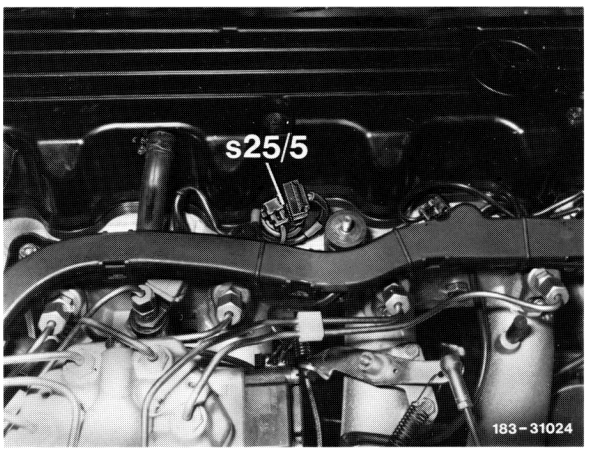

Engine 103 to 08/87

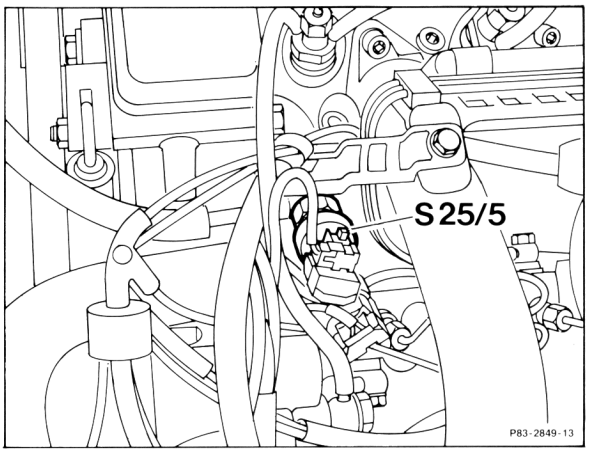

Engine 602 and 603 except TURBO up to 08/87

Arrangement temperature switch (S25/11)

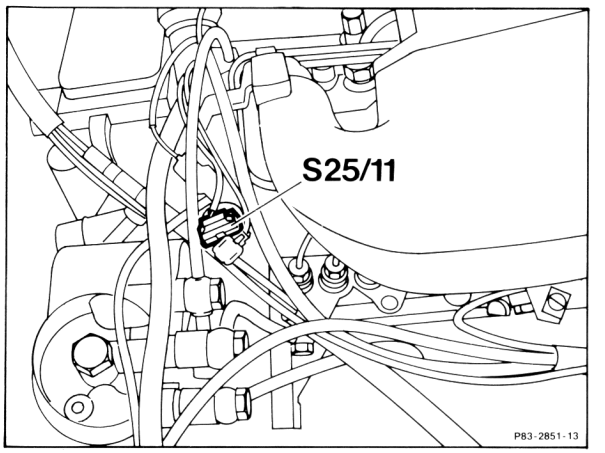

Engine 603 TURBO up to 08/87

83.0742-600/24

b) On vehicles as of 09/87, the emergency cutoff is controlled by a temperature sensor (B11/7 or B10/8). This temperature sensor transmits its resistance value corresponding to the coolant temperature to the control unit, which processes the value and switches off the refrigerant compressor in 2 stages as follows:

1st stage
At a coolant temperature of 122°C in the case of the diesel vehicle, the operating time is reduced by 50%. In this process the compressor works in cycles, i.e. approx. 20 seconds off and 20 seconds on.
If the coolant temperature drops to 117°C, the compressor is switched fully on again.

2nd stage
The refrigerant compressor is switched off completely at a coolant temperature of 128°C .
If the coolant temperature drops to 122°C, the compressor is switched again on in cycles (1st stage).

Arrangement of temperature sensor coolant (B11/7 or B10/8)

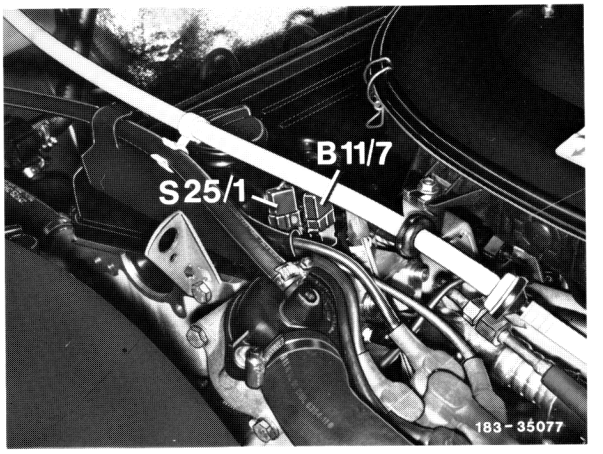

Engine 102 as of 09/87

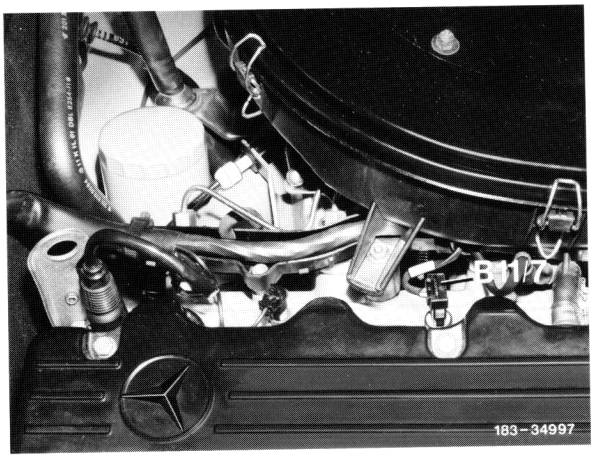

Engine 103 as of 09/87

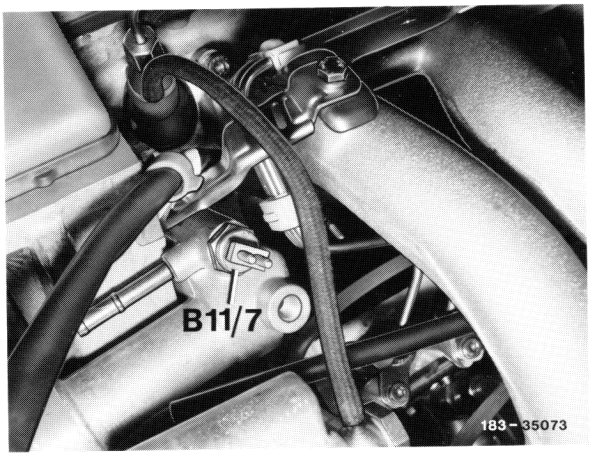

Engines 601-603 as of 09/87

83.0742-600/26

K. Auxiliary fan and control of auxiliary fan

Up to 08/89 all models are equipped with a large electrical auxiliary fan (M4). The power consumption at maximum speed is approx. 17.5 amps at a battery voltage of 13 volt.

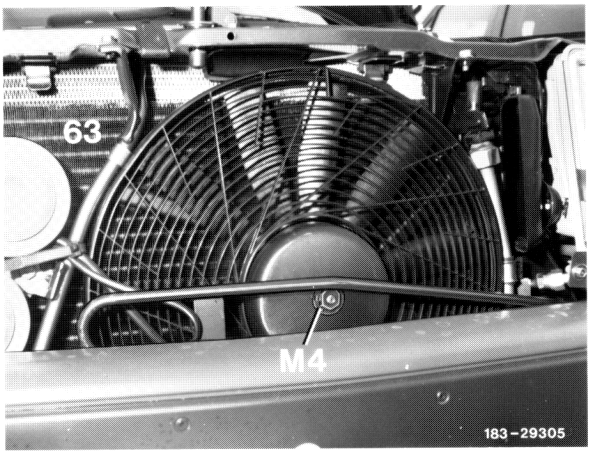

Models 124 with 6- or 8-cylinder engines and models 124.127, 128 are equipped with 2 auxiliary fans, fan shroud and condenser with a higher output. The power consumption in the 2nd stage is 25 amps at a battery voltage of 13 volt.

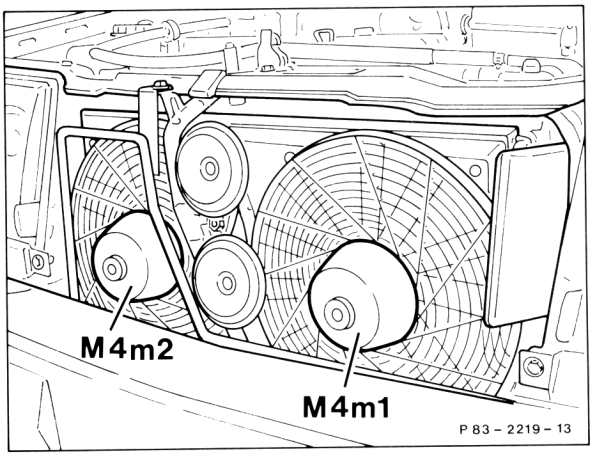

Arrangement of auxiliary fan M4m1 and M4m2

The auxiliary fan is controlled in two stages:

1st stage
By the pressure switch (S32 or S32/1), at a refrigerant pressure of 20 bar, via the relay (K10) and preresistor (R15).

Arrangement of receiver/drier and preresistor (R15):

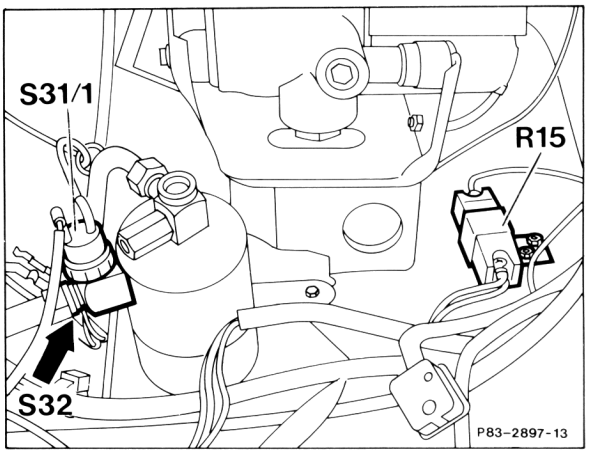

Arrangement of receiver/drier and preresistor (R15):
S31 Pressure switch refrigerant compressor
S32 Pressure switch for auxiliary fan
On 20 bar/Off 15 bar

83.0742-600/27

Arrangement of all models 124 up to 05/92

K9 Relay auxiliary fan
K10 Relay auxiliary fan preresistor

Arrangement on models 124.034/036 as of 07/91 up to 05/92

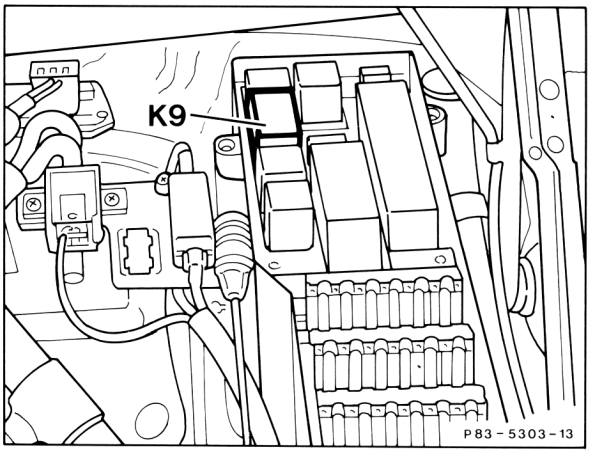

K9 Relay auxiliary fan

Arrangement of all models 124 as of 06/92

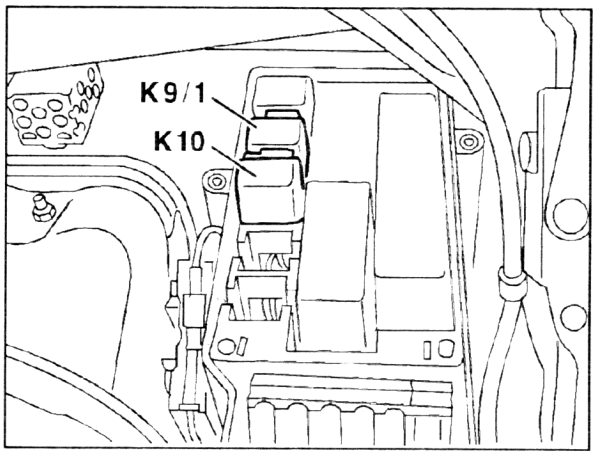

P83.30-0214-01

K9/1 Relay auxiliary fan, 1st stage
K10 Relay auxiliary fan, 2nd stage

83.0742-600/28

2nd stage

On vehicles up to 08/87, by the temperature switch (S25/4) at 110°C or (S25/5, S25/11) at 105°C coolant temperature via the relay (K9) direct.

On vehicles as of 09/87, the relay (K9) is directly activated by the temperature sensor (B11/7 or B10/8) at a coolant temperature of 107°C via the pushbutton control unit.

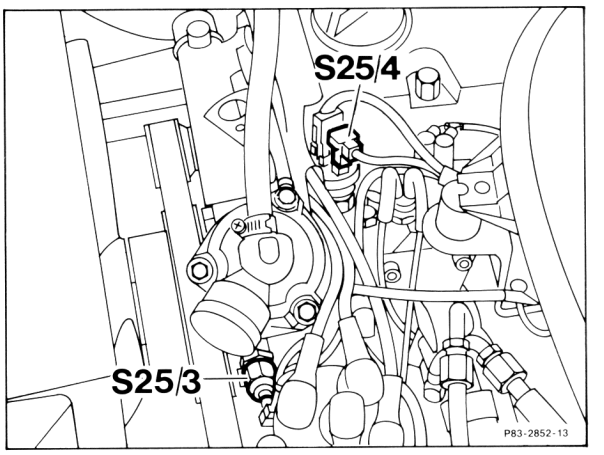

S25/4 Temperature switch 100/110°C
Engine 102 up to 08/87

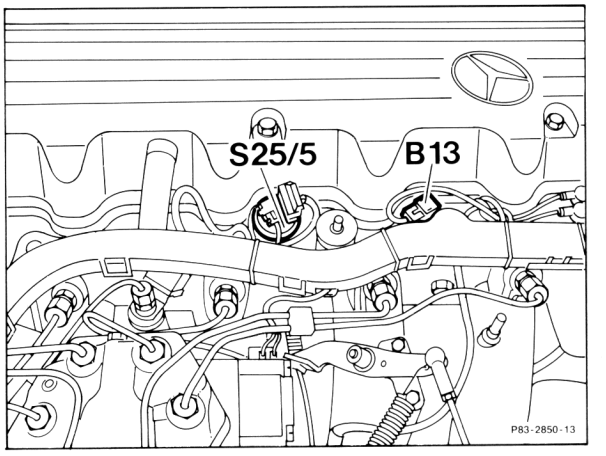

S25/5 Temperature switch 105/115°C
Engine 103 up to 08/87

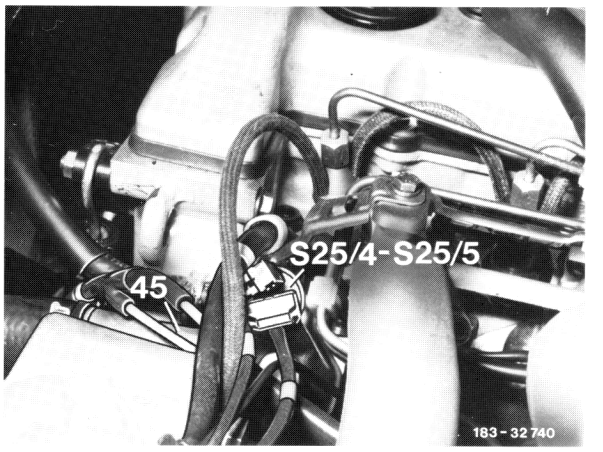

S25/4 Temperature switch 100/110°C
S25/5 Temperature switch 105/115°C
Engines 601-603 except TURBO up to 08/87

83.0742-600/29

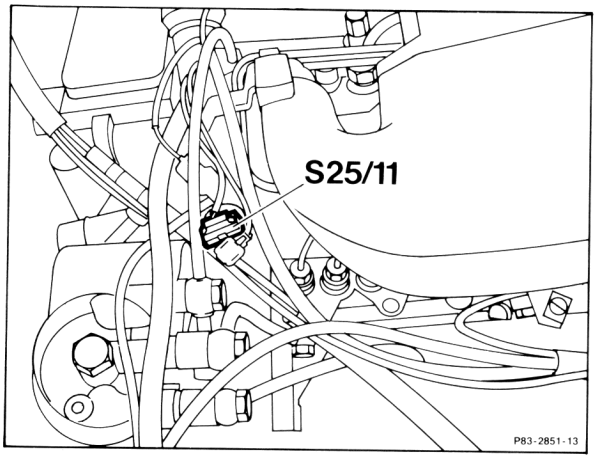

S25/11 Temperature switch 105/120°C
Auxiliary fan 2nd stage
Engine 603 TURBO up to 08/87

Arrangement temperature sensor (B11/7)

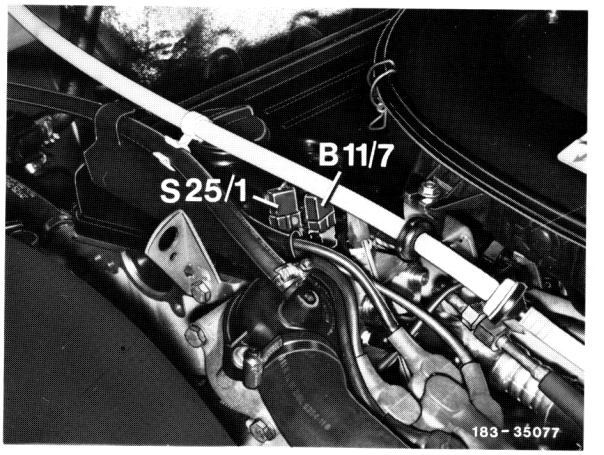

Engine 102 as of 09/87

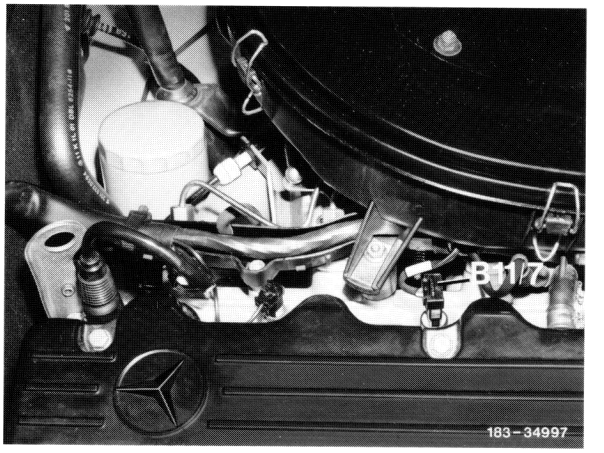

Engine 103 as of 09/87

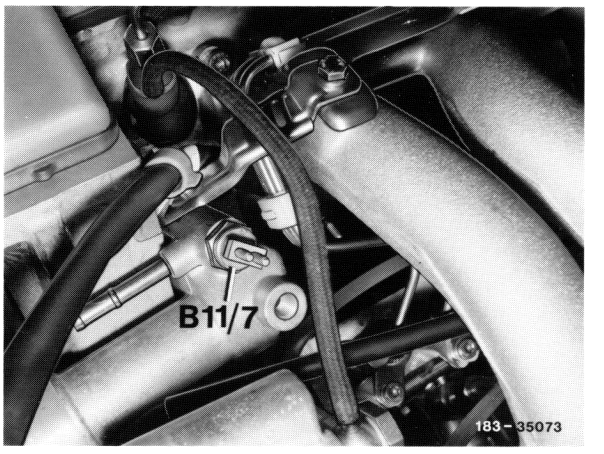

Engines 601-603 except TURBO
as of 09/87

83.0742-600/30

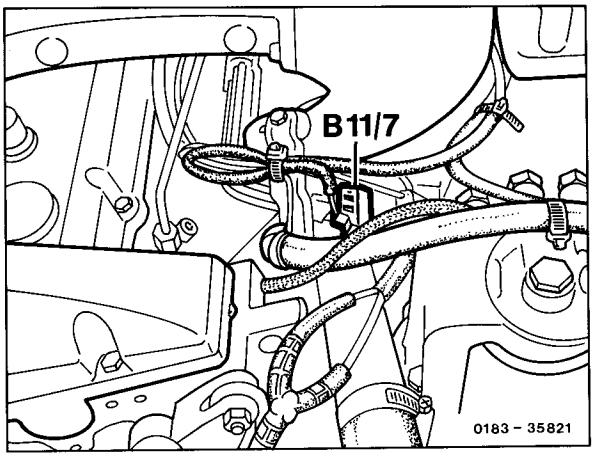

Engine 603 TURBO as of 09/87

L. Fault display by impulse output (as of 09/87)

Constant malfunctions due to interruption or short-circuit, e.g. of temperature sensors, switchover valves and circulating pump, are recorded by the pushbutton control unit, evaluated and passed on to the test coupling (X92 or X11/4) in the form of voltage impulses (battery voltage). These faults are not stored but can be read out with an impulse counter. Depending on the display on the impulse counter it is possible to determine the faulty component or its supply cables (see testing the air conditioner/automatic climate control with impulse counter 83-503).

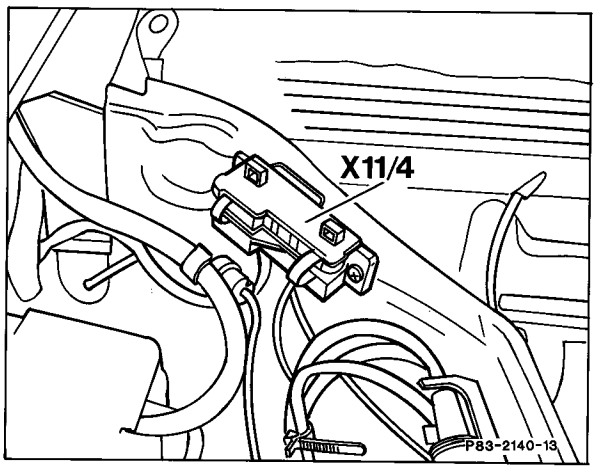

X11/4 Test coupling for diagnosis, 8-pin (flash code)

On models 124.034/036 the fault impulse is output via the test coupling (X11/4) for diagnosis in the module box.

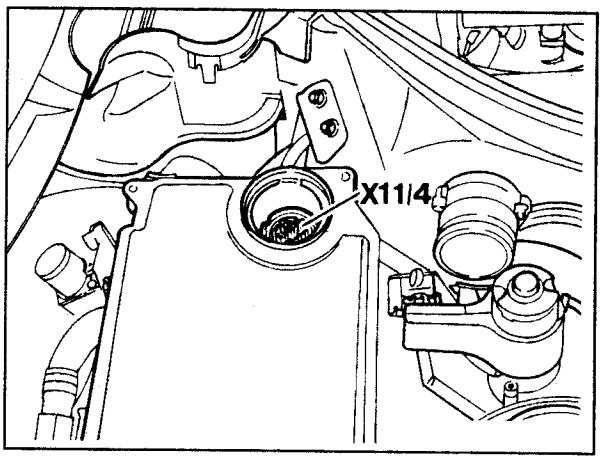

P07-2603-13

M. Vacuum function diagrams

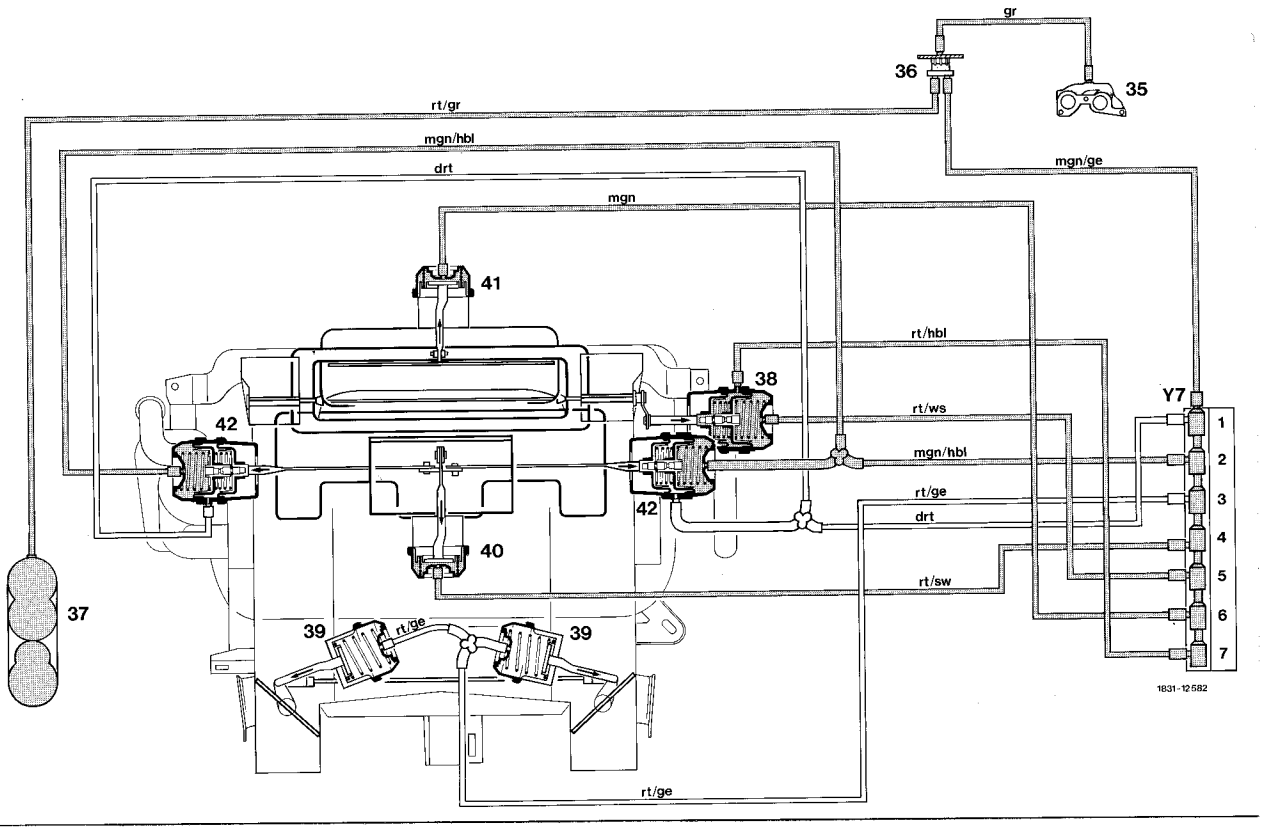

Vacuum function diagram up to 08/86

Function selection cooling - recirculated air

Y7		Switchover valve strip 7-times	hbl	light blue
	y1	Switchover valve for fresh/recirculated air flap (small lift)	drt	dark red
	y2	Switchover valve for fresh/recirculated air flap (large lift)	ge	yellow
	y3	Switchover valve for footwell flaps	mgn	medium green
	y4	Switchover valve for center nozzle flap	gr	grey
	y5	Switchover valve for defroster nozzle flaps (large lift)	rt	red
	y6	Switchover valve for diverter air flap	ws	white
	y7	Switchover valve for defroster nozzle flaps (small lift)	sw	black

35	Vacuum connection to intake manifold
36	Check valve
37	Vacuum reservoir (except on diesel models)
38	Vacuum element for defroster nozzle flaps (flaps "closed")
39	Vacuum element for footwell flaps (flaps "closed")
40	Vacuum element for center nozzle flap (flap "open")
41	Vacuum element for diverter air flap (flap "open")
42	Vacuum element for fresh/recirculated air flap (flap in position 20% fresh air)

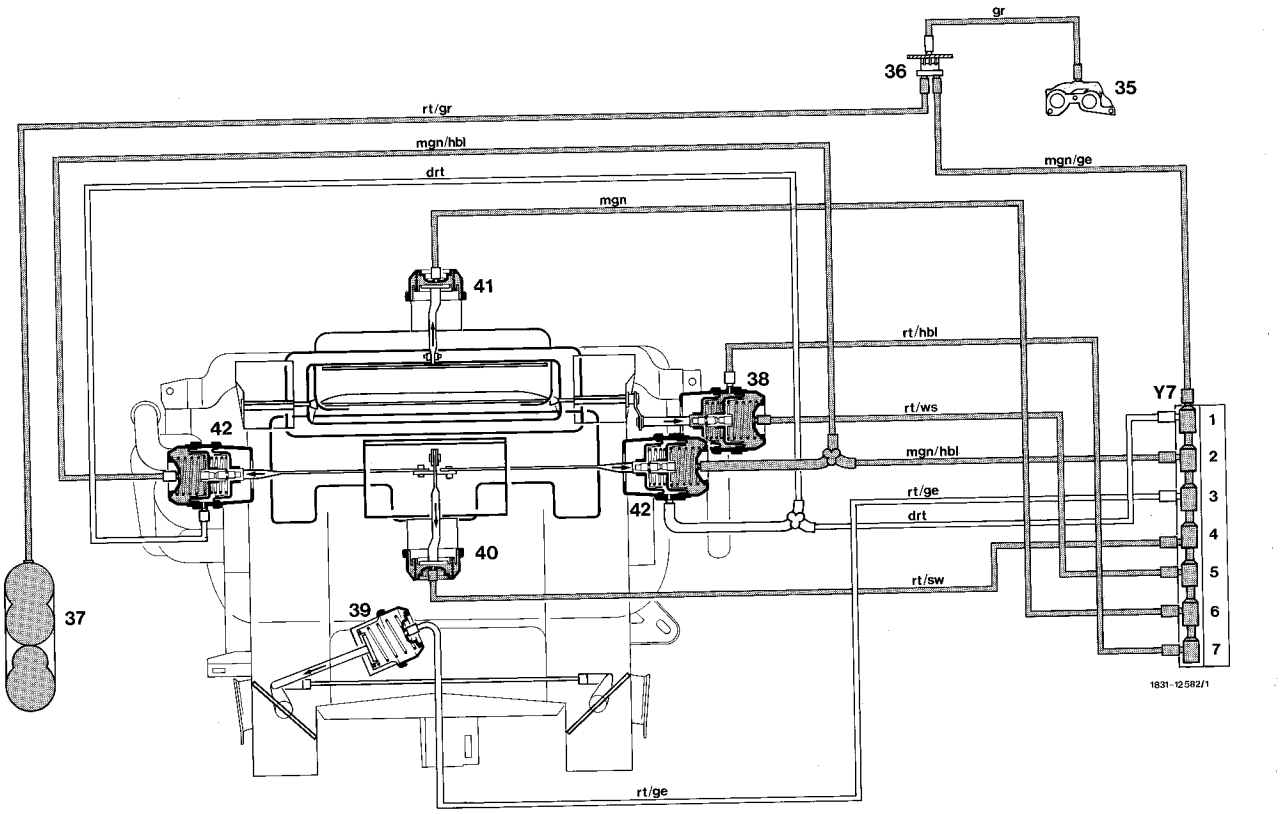

Vacuum function diagram as of 09/86
Function selection cooling - recirculated air

Y7		Switchover valve strip 7-times
	y1	Switchover valve for fresh/recirculated air flap (small lift)
	y2	Switchover valve for fresh/recirculated air flap (large lift)
	y3	Switchover valve for footwell flaps
	y4	Switchover valve for center nozzle flap
	y5	Switchover valve for defroster nozzle flaps (large lift)
	y6	Switchover valve for diverter air flap
	y7	Switchover valve for defroster nozzle flaps (small lift)

35	Vacuum connection to intake manifold
36	Check valve
37	Vacuum reservoir (except on diesel models)
38	Vacuum element for defroster nozzle flaps (flaps "closed")
39	Vacuum element for footwell flaps (flaps "closed")
40	Vacuum element for center nozzle flap (flap "open")
41	Vacuum element for diverter air flap (flap "open")
42	Vacuum element for fresh/recirculated air flap (flap in position 20% fresh air)

hbl	light blue
drt	dark red
ge	yellow
mgn	medium green
gr	grey
rt	red
ws	white
sw	black

N. Residual engine heat utilization (MRA)

Arrangement of engine time-limit relay for residual engine heat utilization (N14/4) as of 09/92 installed in the extension of the A-pillar behind the plastic cover in the front passenger footwell.

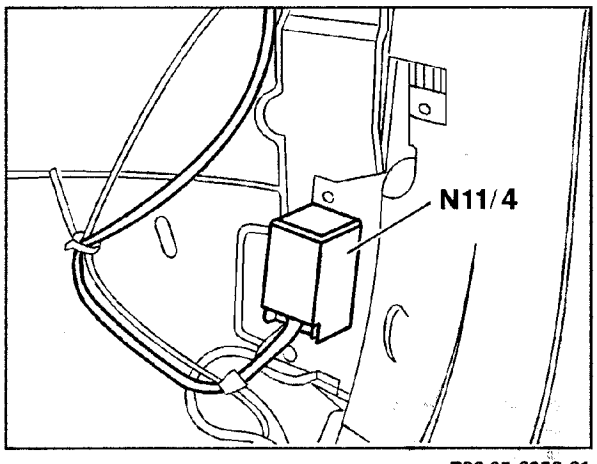

P83.25-0250-01

Residual heat operation REST

Only switch on the system after ignition OFF

After operating the switch, the system works automatically in the following operating condition:

- Passenger compartment temperature depending on the setting of the temperature selector wheel
- Blower on low stage
- Flap position depending on preselected passenger compartment temperature
- Battery voltage > 11.8 V
- Time limitation of 30 min. or ignition ON

Residual engine heat utilization - taxi

All taxis with diesel engines as of vehicle ident. nos. 1C 022 727 or 1F 265 041 have an automatic heater control (HAU) time-limit relay (N11/6) installed to avoid post-heating, located next to the fuse and relay box.

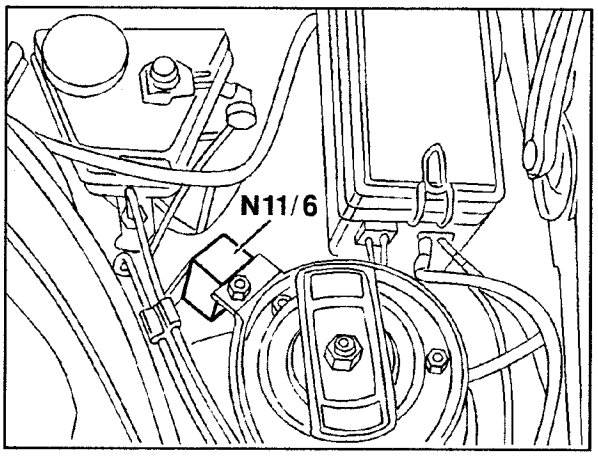

P83.25-0253-01

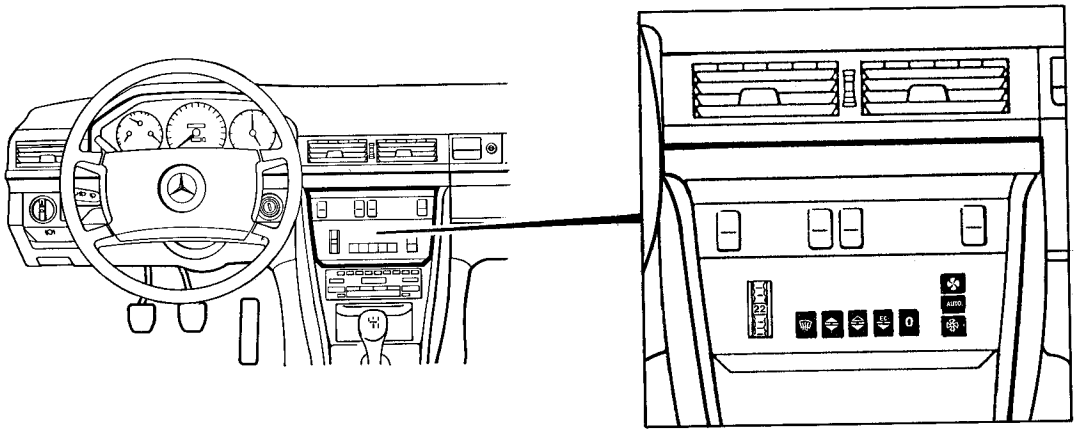

During the entire test, allow engine to run at operating temperature (approx. 80°C coolant temperature) and idle speed. Open center and lateral nozzles.

	check with:		
	selector wheel	function button	blower
Defrosting (item 1)	any		any
Total ventilation in cooling operation (item 2)	engaged "MIN"		
Normal adjustment in cooling operation (item 3)	engaged "MIN"		
Normal adjustment in regulating operation (item 4)	= Interior temperature		
Economy in heating operation (item 5)	engaged "MAX"		
Blower minimum (item 6)	22 °C		
Blower maximum (item 7)	22 °C		

Note

This test serves to check the operation of the system without measuring instrument. The text explains further tests with measuring instruments should there be deviations from the nominal functions.

1. Defrosting

Selector wheel . . . . . any
Function button . . . . .
Blower . . . . . –

Nominal function:
- Blower runs with increased speed.
- Air upwards.
- Compressor on.
- Max. heating output.

Tests when deviating:
Check electric components of the automatic climate control (83-604). If the heating output is not achieved, renew mono valve or flush cooling system.

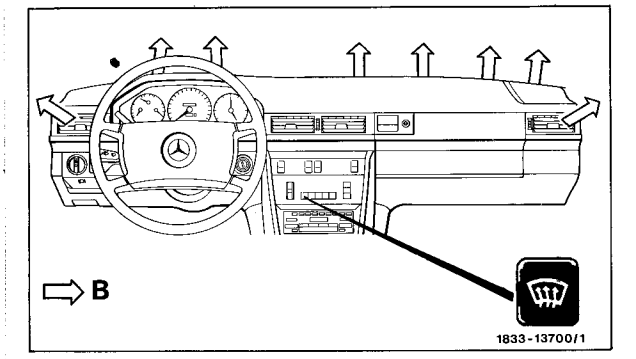

B Heated air

2. Total ventilation in cooling operation

Selector wheel . . . . . "MIN" engaged
Function button . . . . .
Blower . . . . .

Nominal function:
- Blower runs with increased stop.
- Air upwards, downwards and in the center.
- No heating output.
- Compressor on.

Tests when deviating:
1. Check electric components of the automatic climate control (83-604).
2. If the flaps fail to open, check vacuum system for flap control (83-620).
3. With heated air, check voltage on mono valve, nominal valve > 11 V, renew mono valve if required.

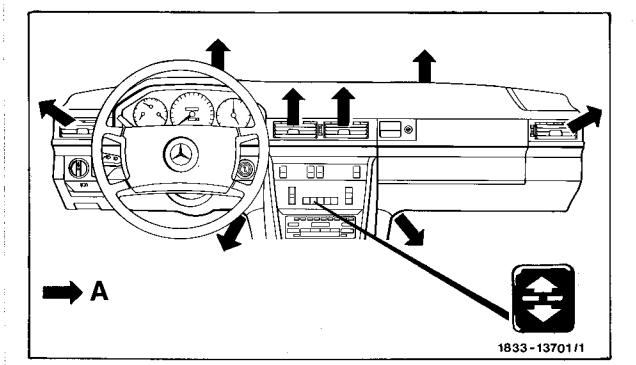

A Cooled air

3. Normal adjustment in cooling operation

Selector wheel . . . . . engaged "MIN"
Function button . . . . .
Blower . . . . .

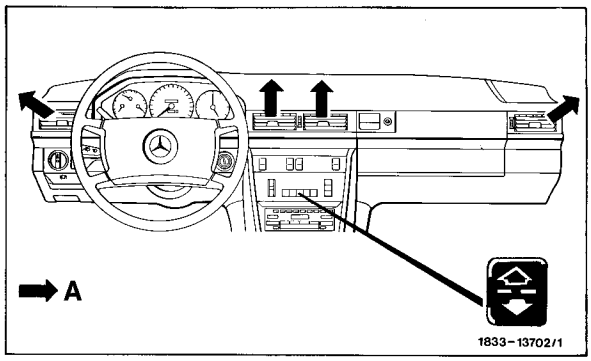

A Cooled air

Nominal function:

- Blower runs with increased speed.
- Footwell flaps and defroster nozzle flaps close.
- Air only from center and lateral nozzles.
- No heating output.
- Compressor on.

Tests when deviating:

1. Check electric components of the automatic climate control (83-604).
2. If the defroster nozzles and footwell flaps fail to close, check vacuum system for flap control (83-620).

B Heated air
C Leakage air (hot)

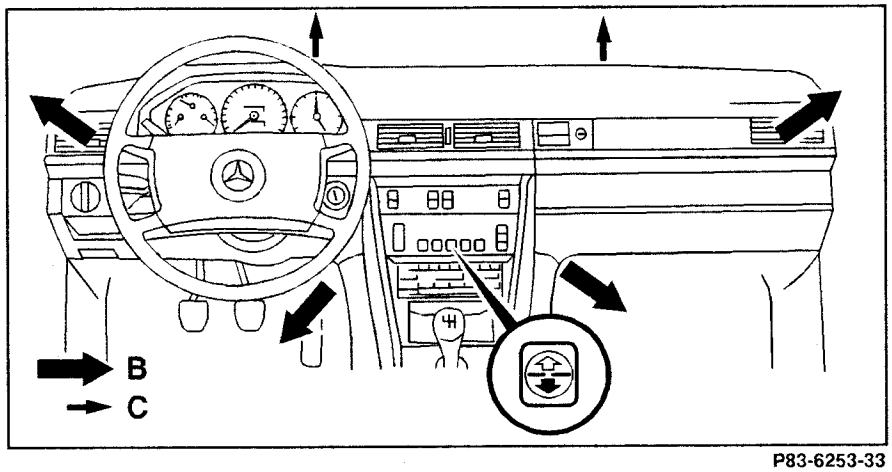

4. Normal adjustment in regulating operation

Selector wheel set according to interior temperature
Function button . . . . .
Blower . . . . .

Nominal function:

- Blower speed decreases.
- Air downwards and in the center and leakage air upwards.
- Regulated air outlet with the mono valve operating in cycles and the circulating pump running.
- Compressor on.

Tests when deviating:

Check electric components of the automatic climate control (83-604).

5. Economy in heating operation

Selector wheel . . . . . "MAX" (engaged)
Function button . . . . .
Blower . . . . .

Nominal function:
- Blower speed rises.
- Air downwards, center only outside, and leakage air to the top.
- Max. heating output.

Tests when deviating:
Check electric components of the automatic climate control (83-604).

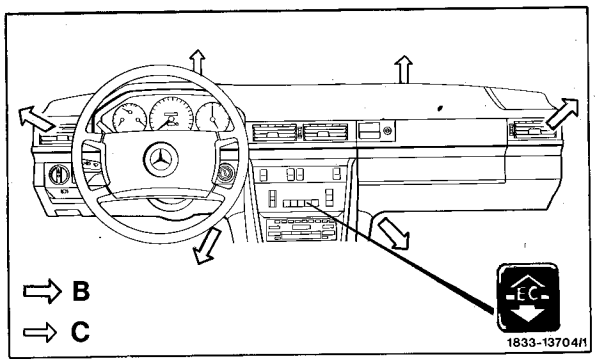

B Heated air
C Leakage air (warm)

6. Blower, minimum

Selector wheel . . . . . 22 °C
Function button . . . . .
Blower . . . . .

Nominal function:
- Minimum blower speed.

Tests when deviating:
Check electric components of the automatic climate control (83-604, test step 20).

7. Blower, maximum

Selector wheel . . . . . 22 °C
Function button . . . . .
Blower . . . . .

Nominal function:
- Max. blower speed.

Tests when deviating:
Check electric components of the automatic climate control (83-604).

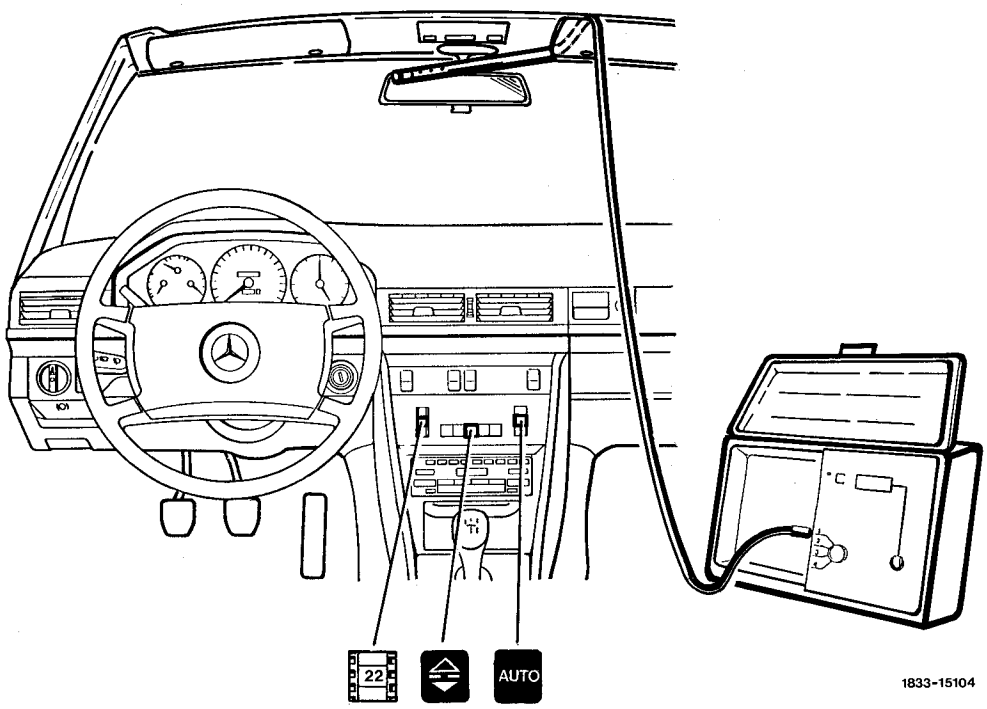

Test conditions	Observe items 1 to 4.
A. Regulating quality	Check, items 5 to 11: While driving, after 10-15 minutes, nominal value 22 ± 1°C, with selector wheel position 22 and function selections
B. Heating output	Check, items 12 to 14: With running engine approx. 2000/min after 5 minutes, nominal value above 55°C, with function selection

Conventional tools

Digital temperature measuring instrument with 4 measuring probes

Robbitemp	90020
Air temperature measuring probe (Cable length 4.5 m)	90023

Supplier, e.g.:
Switzerland: Kent-Moore (Europe) AG
P. O. Box, CH–6340 Baar
Germany: Kälte-Fischer
Postfach 266, Augsburger Str. 289 - 291
D–70327 Stuttgart

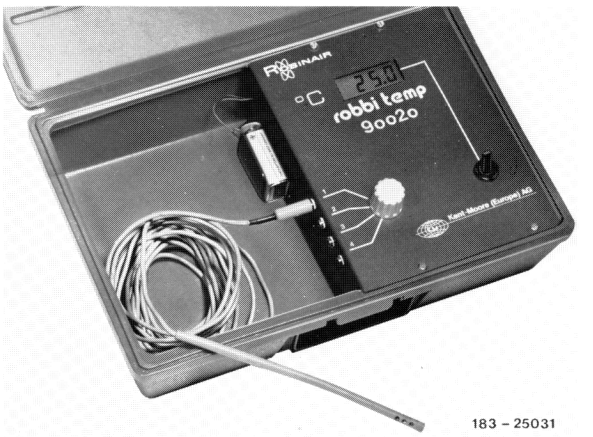

183 – 25031

Digital temperature measuring instrument with 4 measuring probes

Therm	2263-2
4-fold measuring point switchover switch	2235-4
Air temperature measuring probe (Cable length 3 m)	W 453-5

Supplier, e.g.:
Germany: Ahlborn Meß- und Regelungstechnik in der Eichenfeldstr. 1–3, D–83607 Holzkirchen

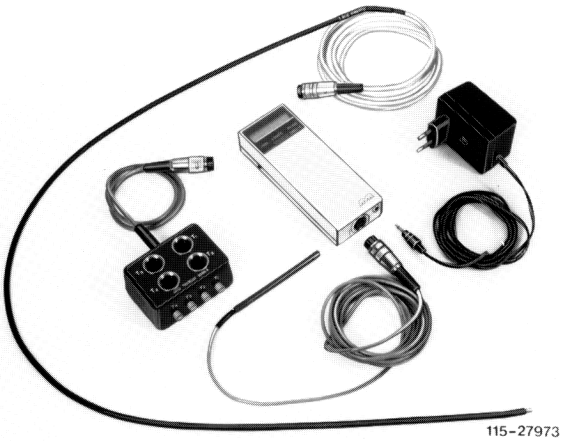
115-27973

Note

Do not carry out test in the workshop, but on the cool vehicle which has been allowed to stand in the open overnight. Interior temperature < 20°C.

Test conditions

1 Outside temperature < + 15°C.

2 Driving time up to the start of the measurements approx. 10 minutes. With outside temperatures < 0°C a longer test drive is required.

3 Windows and sliding roof closed.

4 **Do not allow** engine to run up to operating temperature beforehand.

83.0742-602/2

A. Checking regulating quality

5 Attach measuring probe to sun visor (right, arrow) and connect to measuring instrument. Then switch on measuring instrument.

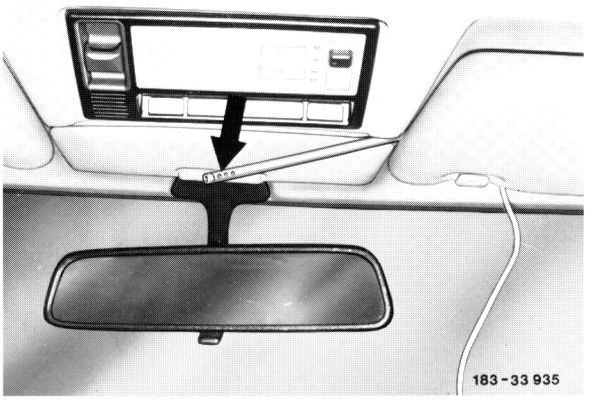

6 On the pushbutton switch (b) select the function and on the blower switch (c) the function AUTO.

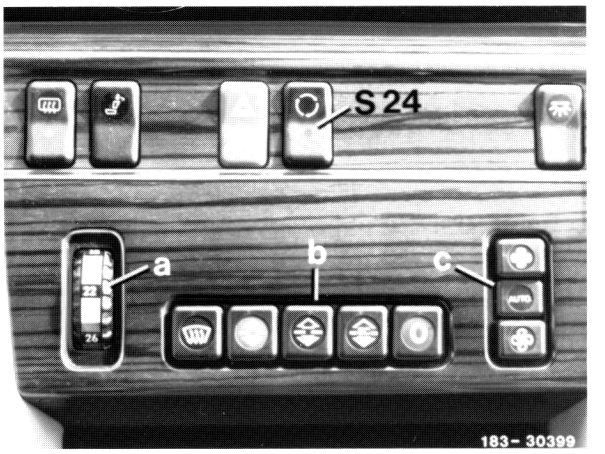

7 Switch off switch (S24, fresh air).

8 Close center nozzle.

9 Set temperature selector wheel (a) to 22.

10 Start engine and drive away immediately (approx. 50-60 km/h).

11 After approx. 10-15 minutes, read temperature on measuring instrument. Nominal value 22 ± 1°C. If the temperature is not achieved, check heating output or test the system with the socket box, voltmeter and ohmmeter (see 83-604).

B. Checking heating output

12 Fit one measuring probe (arrow) each into the left and right defroster nozzles.

13 On the pushbutton switch, switch on the function .

14 Allow engine to run at operating temperature with approx. 2000/min for 5 minutes.
Nominal value: > 55°C.

Note
If the temperature is not achieved, check function of circulating pump. If o.k., renew mono valve for trial, flush cooling system if required. If this does not help, replace heat exchanger.

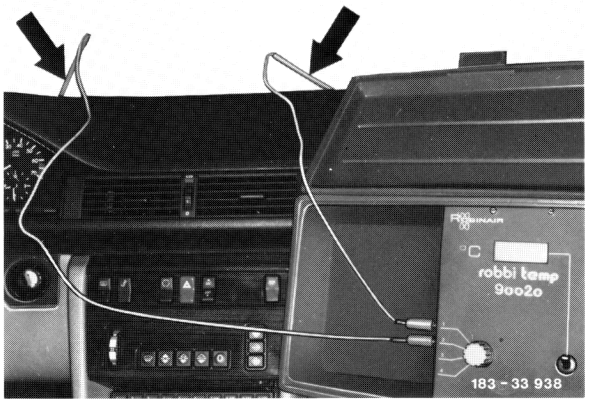

83.0742-602/4

83-603 Testing the automatic climate control with the impulse counter (as of 09/87)

Operation no. of operation texts and work units or standard texts and flat rates
RA 83-1220

A. All models except models 124.034/036

Connection diagram

013 Impulse counter
G1 Battery
X11/4 Test coupling for diagnosis, 8-pin (pulse readout)

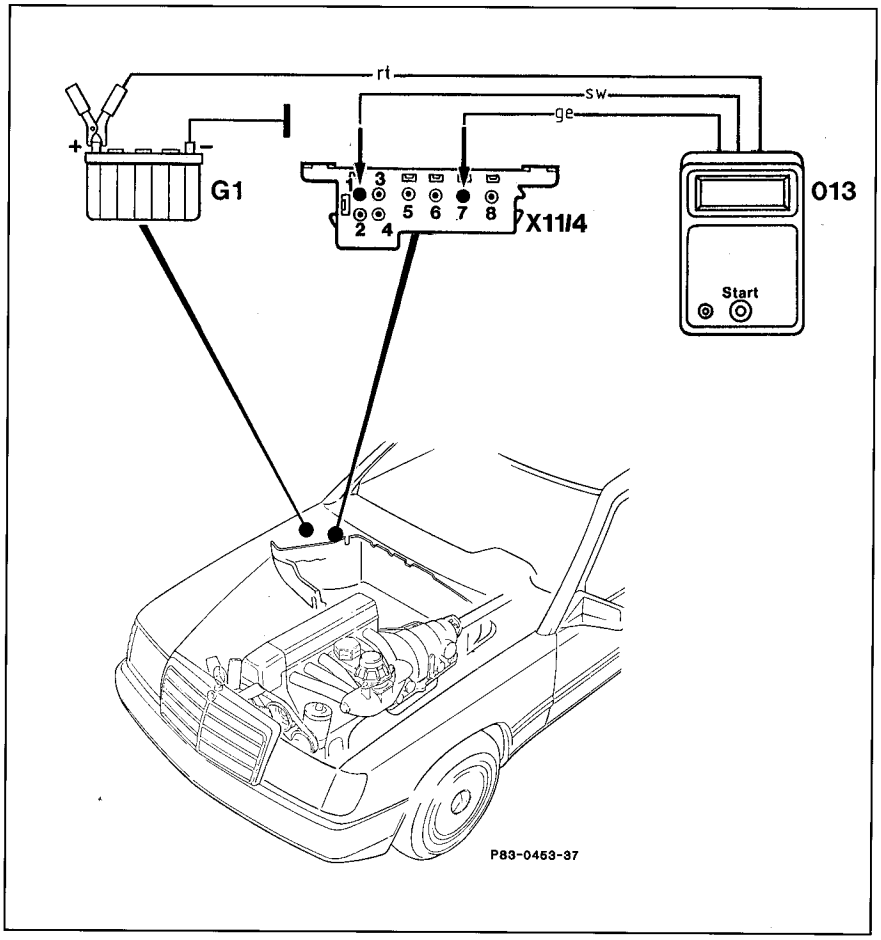

The number of impulses indicates which component or which supply cables are faulty

Impulse display	Component
1	All functions "o.k."
2	Temperature sensor interior air, short-circuit
3	Temperature sensor interior air, interruption
4	Temperature sensor outside air, short-circuit
5	Temperature sensor outside air, interruption
6	Temperature sensor evaporator, short-circuit

7	Temperature sensor evaporator, interruption
8	Temperature sensor heat exchanger, short-circuit
9	Temperature sensor heat exchanger, interruption
12	Temperature sensor coolant, short-circuit
13	Temperature sensor coolant, interruption
30	Circulating pump, short-circuit/interruption
31	Mono valve, short-circuit/interruption
33	Control unit compressor cutoff, short-circuit
34	Auxiliary fan 2nd stage (control), short-circuit
50	Switchover valve defroster nozzle flaps (large lift), short-circuit
51	Switchover valve defroster nozzle flaps (small lift), short-circuit
52	Switchover valve footwell flaps, short-circuit
54	Switchover valve center nozzle flap, short-circuit
55	Switchover valve diverter air flap, short-circuit
56	Switchover valve fresh air/recirculated air flap (large lift), short-circuit
57	Switchover valve fresh air/recirculated air flap (small lift), short-circuit

Special tool

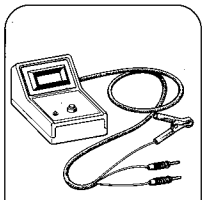

124 589 19 21 00

Instructions on impulse output

The impulse output shows existing faults, however faults occurring only for brief periods are not stored.

The test with the impulse counter is to be carried out for rapid troubleshooting on the automatic climate control.

If one or several faults are displayed by the impulse output, these are to be eliminated and the impulse output repeated. This ensures that all faults recorded by the impulse output are eliminated.

If no fault is displayed by the impulse output, but there is nevertheless a complaint, there may be a tolerance deviation in the components, e.g. too low resistance value in the case of sensors. Since the impulse output does not record such a deviation, the complete system must be checked with the socket box and the volt/ohmmeter.

Testing

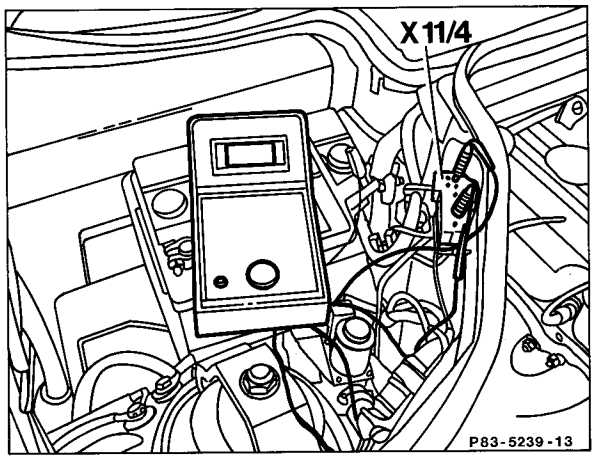

Connect impulse counter in accordance with the connection diagram.

The light-emitting diode "UBatt" must light up, if not:
a) Check fuse
b) Check jack 1 on test coupling (X92) to battery positive. Nominal value 11 - 14 V.
c) Check jack 1 to jack 7 on test coupling (X92). Nominal value 6 - 12 V.
Switch on ignition.

Operate start button (1) for between 2 and 4 seconds.

Read out and note impulse code display.

Number 1 means that no error has been recorded by the impulse output. All other numbers are allocated to a particular group of faults. If there are several faults in the system, the next fault is displayed automatically when the start button is operated subsequently.

Operate the start button again for between 2 and 4 seconds. If there is no other fault in the system, the first number appears again.

Eliminate the faults noted (impulse output) and repeat impulse output by switching the ignition off and on again.

Note
The light-emitting diode in the fresh/recirculated air switch flashes at a frequency of one Hertz during the impulse output.

B. Models 124.034/036

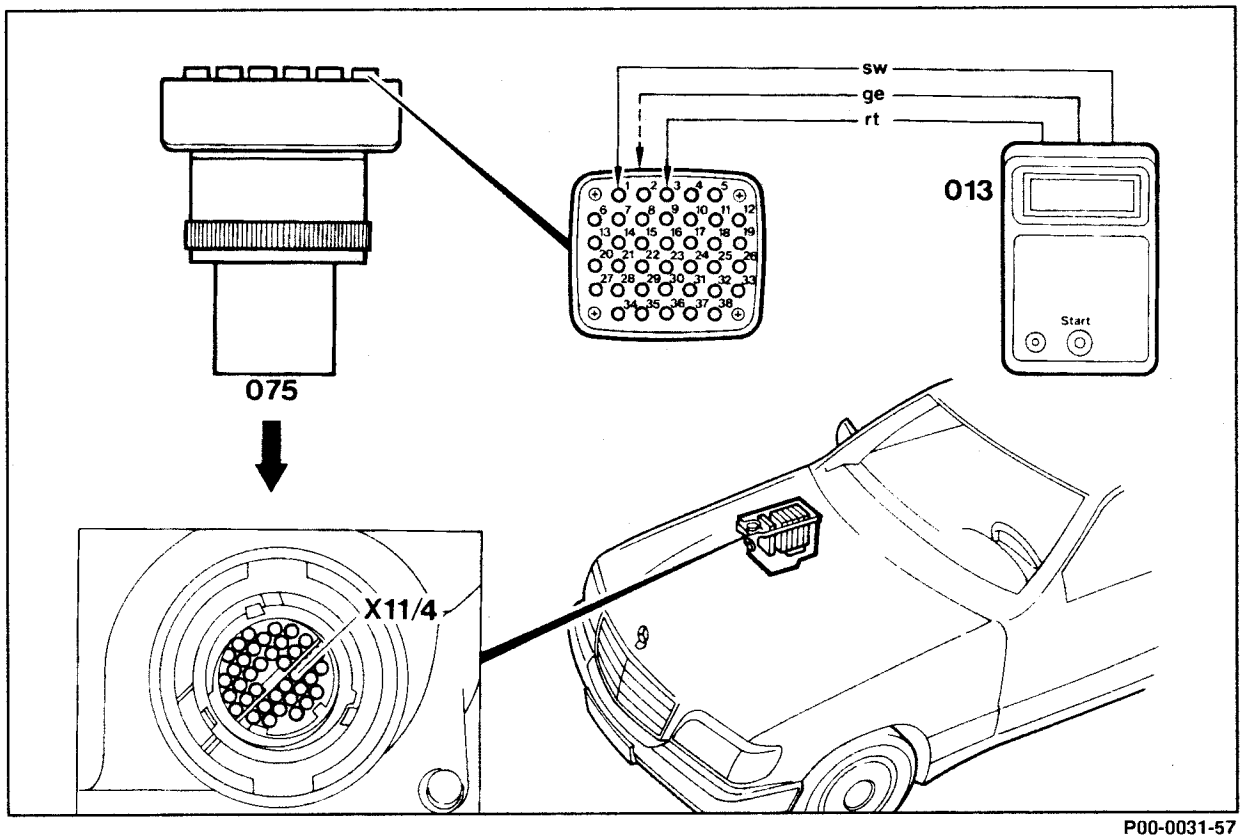

Jack 1	Terminal 31 (ground)
Jack 3	Terminal 30 (positive)
075	Impulse counter adapter
013	Impulse counter
X11/4	Test coupling for diagnosis (pulse readout)

Note

Connect yellow cable to jack 16

The number of impulses indicates which component or cables are faulty.

Impulse indicator	Component
1	All functions "o.k"
2	Temperature sensor interior air, short-circuit
3	Temperature sensor interior air, interruption
4	Temperature sensor outside air, short-circuit

Impulse indicator	Component
5	Temperature sensor outside air, interruption
6	Temperature sensor evaporator, short-circuit
7	Temperature sensor evaporator, interruption
8	Temperature sensor heat exchanger, short-circuit
9	Temperature sensor heat exchanger, interruption
12	Temperature sensor coolant, short-circuit
13	Temperature sensor coolant, interruption
30	Circulating pump coolant, short-circuit/interruption
31	Mono valve, short-circuit/interruption
33	Control unit refrigerant compressor shut-off, short-circuit/interruption
34	Auxiliary fan 2nd stage (control), short-circuit
50	Switchover valve defroster nozzle flaps (large lift), short-circuit
51	Switchover valve defroster nozzle flaps (small lift), short-circuit
52	Switchover valve footwell flaps, short-circuit
54	Switchover valve center nozzle flap, short-circuit
55	Switchover valve diverter air flap, short-circuit
56	Switchover valve fresh air/recirculated air flap (large lift), short-circuit
57	Switchover valve fresh air/recirculated air flap (small lift), short-circuit

Special tools

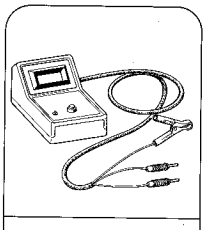

124 589 19 21 00
07 83

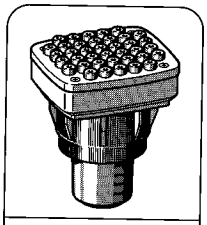

140 589 14 63 00
54

Notes on impulse output

The impulse output indicates existing faults, however faults which only occur briefly are not stored.

The test with the impulse counter should be carried out for rapid troubleshooting on the automatic climate control.

If the impulse output indicates one or several faults, these must be eliminated and the impulse output repeated. This ensures that all faults recorded by the impulse output are eliminated.

If the impulse output does not indicate any fault, but there is nevertheless a complaint, there may be a tolerance deviation in the components, e.g. too low resistance value in the case of sensors. Since the impulse output does not record such a deviation, the complete system must be checked with the socket box and the volt/ohmmeter.

Testing

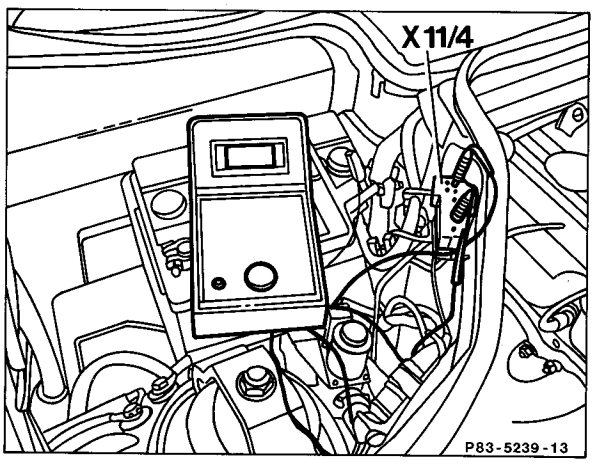

Connect impulse counter in accordance with the connection diagram.

The light-emitting diode "UBatt" must light up, if not:
a) Check fuse.
b) Check jack 1 on test coupling (X92) to battery positive. Nominal value 11 - 14 V.
c) Check jack 1 to jack 7 on test coupling (X92). Nominal value 6 - 12 V.
Switch on ignition.

Operate start button (1) for between 2 and 4 seconds.

Read out and note impulse code display.

Number 1 means that no error has been recorded by the impulse output. All other numbers are allocated to a particular group of faults. If there are several faults in the system, the next fault is displayed automatically when the start button is operated subsequently.

Operate the start button again for between 2 and 4 seconds. If there is no other fault in the system, the first number appears again.

Eliminate the faults noted (impulse output) and repeat impulse output by switching the ignition off and on again.

Note
The light-emitting diode in the fresh/recirculated air switch flashes at a frequency of one Hertz during the impulse output.

Impulse output

Test conditions:
Fuse 7 in order, battery voltage 11 - 14 volt and selector wheel set on 22°C.

Fault diagnosis chart

Impulse display	Scope of test	Measuring instrument / Test connection	Nominal value	Possible cause/ Remedy
1	–	–	–	No fault in the system was registered by the impulse output.
2/3	Temperature sensor interior air (B10/4) short-circuit/ interruption	on temperature sensor (B10/4)	Ambient temperature + °C / Resistance value temperature sensor interior air kΩ 10 — 18.3 – 21.5 15 — 15.2 – 17.2 20 — 11.5 – 13.5 25 — 9.5 – 10.5 30 — 7.5 – 8.5 35 — 6.0 – 7.0 40 — 4.5 – 5.5 45 — 3.5 – 4.5	Temperature sensor interior air defective
	Cable to the temperature sensor interior air	Remove control unit to coupling R jacks 2 and 12	∞ Ω	Cable to the temperature sensor interior air is shorted to ground
		to coupling R jack 2 and to coupling temperature sensor (B10/4) jack grey/yellow	< 1Ω	Cable to the temperature sensor interior air is interrupted

Im-pulse display	Scope of test	Measuring instrument / Test connection	Nominal value		Possible cause/ Remedy
4/5	Temperature sensor outside air (B10/5) short-circuit/ interruption	on temperature sensor (B10/5)	Ambient temper-ature + °C 10 15 20 25 30 35 40 45	Resistance value temperature sensor exterior air kΩ 5.0 – 6.0 4.0 – 4.6 3.1 – 3.9 2.4 – 3.0 1.9 – 2.3 1.6 – 2.0 1.4 – 1.6 1.1 – 1.3	Temperature sensor outside air defective
	Cable to the temperature sensor outside air	Remove control unit to coupling R jacks 9 and 12	∞ Ω		Cable to the temperature sensor outside air is shorted to ground
		to coupling R jack 9 and to coupling temperature sensor (B10/5) jack grey/black	< 1 Ω		Cable to the temperature sensor outside air is interrupted

Im-pulse display	Scope of test	Measuring instrument / Test connection	Nominal value		Possible cause/ Remedy
6/7	Temperature sensor evaporator (B10/6) short-circuit/ interruption	to temperature sensor (B10/6)	Ambient temper-ature + °C 0 5 10 15 20 25 30 35 40 45	Resistance value temperature sensor evaporator kΩ 30.0 – 35.0 23.4 – 27.4 18.3 – 21.5 15.2 – 17.2 11.5 – 13.5 9.5 – 10.5 7.5 – 8.5 6.0 – 7.0 4.5 – 5.5 3.5 – 4.5	Temperature sensor evaporator defective
	Cable to the temperature sensor evaporator	Remove control unit to coupling R jacks 4 and 12	∞ Ω		Cable to the temperature sensor evaporator is shorted to ground
		to coupling R jack 4 and to coupling temperature sensor (B10/6) jack grey/red	< 1 Ω		Cable to the temperature sensor evaporator is interrupted

Im-pulse display	Scope of test	Measuring instrument / Test connection	Nominal value	Possible cause/ Remedy
8/9	Temperature sensor heat exchanger (B10/1) short-circuit/ interruption	 to temperature sensor (B10/1)	Ambient temperature + °C: Resistance value temperature sensor heat exchanger kΩ 10: 18.3 – 21.5 15: 15.2 – 17.2 20: 11.5 – 13.5 25: 9.5 – 10.5 30: 7.5 – 8.5 35: 6.0 – 7.0 40: 4.5 – 5.5 45: 3.5 – 4.5	Temperature sensor heat exchanger defective
	Cable to the temperature sensor heat exchanger	Remove control unit 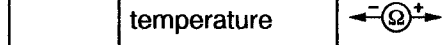 to coupling R jacks 7 and 12	∞ Ω	Cable to the temperature sensor heat exchanger is shorted to ground
		 to coupling R jack 7 and to coupling temperature sensor (B10/1) jack grey/green	< 1 Ω	Cable to the temperature sensor heat exchanger is interrupted

Im-pulse display	Scope of test	Measuring instrument / Test connection	Nominal value	Possible cause/ Remedy
12/13	Temperature sensor coolant (B11/7) short-circuit/ interruption	to temperature sensor (B11/7)	Ambient temperature + °C: 20 / 60 / 85 / 100 / 110 / 120 / 130 Resistance value temperature sensor coolant Ω: 5 – 8 kΩ / 900 – 1800 / 460 – 650 / 300 – 400 / 230 – 290 / 180 – 230 / 135 – 175	Temperature sensor heat exchanger defective
	Cable to the temperature sensor coolant	Remove control unit to coupling R jacks 8 and 12	∞ Ω	Cable to the temperature sensor coolant is interrupted
		to coupling R jack 8 and to coupling temperature sensor (B11/7) jack 2 blue/grey	< 1 Ω	Cable to the temperature sensor coolant is shorted to ground
30[1])	Circulating pump (M13) short-circuit	connect to circulating pump (M13). Ignition: ON and function selection DEF	Power consumption circulating pump max. 0.8 A	Circulating pump defective

[1]) In individual cases it is possible that the impulse code 30 is displayed although the circulating pump and the control unit (N6) are in order. In this case the function of the circulating pump must be tested by feeling. To do so, switch the ignition off and on again and press DEF button.
If the circulating pump is running, there is no fault.

Im-pulse display	Scope of test	Measuring instrument / Test connection	Nominal value	Possible cause/ Remedy
31	Mono valve (Y19) short-circuit	to mono valve (Y19)	11 – 19 Ω	Mono valve defective
33[1])	Control unit compressor cutoff (N6) short-circuit	–	–	Control unit compressor cutoff defective
34	Auxiliary fan 2nd stage (activation) short-circuit	to the relay auxiliary fan (K9) terminals 85 and 86	50 – 80 Ω	Relay auxiliary fan defective
50	Switchover valve defroster nozzle flaps (Y7) (large lift) short-circuit	to switchover valve block (Y7) pins 5 and 8	50 – 80 Ω	Switchover valve block 7-fold defective
51	Switchover valve defroster nozzle flaps (Y7) (small lift) short-circuit	to switchover valve block (Y7) pins 7 and 8	50 – 80 Ω	Switchover valve block 7-fold defective
52	Switchover valve footwell flaps (Y7) short-circuit	to switchover valve block (Y7) pins 3 and 8	50 – 80 Ω	Switchover valve block 7-fold defective

[1]) In individual cases it is possible that the impulse code 33 is displayed although the circulating pump and the control unit (N6) are in order. In this case the function of the circulating pump must be tested by feeling. To do so, switch the ignition off and on again and press DEF button.
If the circulating pump is running, there is no fault.

Im-pulse display	Scope of test	Measuring instrument / Test connection	Nominal value	Possible cause/ Remedy
54	Switchover valve center nozzle flap (Y7) short-circuit	to switchover valve block (Y7) pins 4 and 8	50 – 80 Ω	Switchover valve block 7-fold defective
55	Switchover valve diverter air flap (Y7) short-circuit	to switchover valve block (Y7) pins 6 and 8	50 – 80 Ω	Switchover valve block 7-fold defective
56	Switchover valve fresh/ recirculated air flap (large lift) (Y7) short-circuit	to switchover valve block (Y7) pins 2 and 8	50 – 80 Ω	Switchover valve block 7-fold defective
57	Switchover valve fresh/ recirculated air flap (small lift) (Y7) short-circuit	to switchover valve block (Y7) pins 1 and 8	50 – 80 Ω	Switchover valve block 7-fold defective

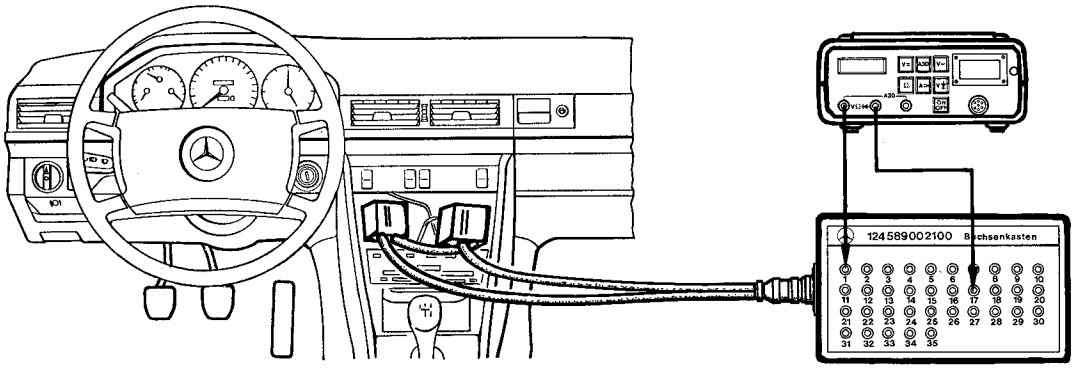

Note and test preparation	Observe
Check temperature sensor interior air (B10/4) with cables	Test step 1
Check temperature sensor outside air (B10/5) with cables	Test step 2
Check temperature sensor evaporator (B10/6) with cables	Test step 3
Check temperature sensor heat exchanger (B10/1) with cables	Test step 4
Check temperature sensor coolant indication (B13) up to 08/87 or temperature sensor coolant (B11/7 or B10/8) as of 9/87 with cables	Test step 5
Check switchover valve block 7-fold (Y7) and cables	Test step 6
Check mono valve (Y19) and cables	Test step 7
Preparation for test step 8-21	Observe
Check voltage supply for control unit	Test step 8
Check Hall sensor (B6) with cable	Test step 9
Check ground activation by the recirculated air switch (S24)	Test step 10
Check ground activation for mono valve (Y19)	Test step 11
Check ground activation for circulating pump (M13)	Test step 12
Check ground activation for switchover valve of the fresh/recirculated air flap, small lift (Y7.1)	Test step 13
Check ground activation for switchover valve for the fresh/recirculated air flap, large lift (Y7.2)	Test step 14
Check ground activation for switchover valve of the footwell flaps (Y7.3)	Test step 15

Check ground activation for switchover valve of the center nozzle flap (Y7.4) ..... Test step 16
Check ground activation for switchover valve of the defroster nozzle flaps, large lift (Y7.5) ..... Test step 17
Check ground activation for switchover valve of the diverter air flap (Y7.6) Test step 18
Check ground activation for switchover valve of the defroster nozzle flaps, small lift (Y7.7) ..... Test step 19
Check control voltage for blower regulator (N29) ..... Test step 20
Check ground activation for refrigerant compressor (Y5) ..... Test step 21

Special tools

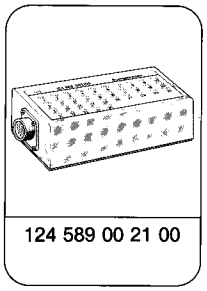

124 589 00 21 00

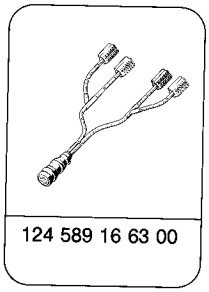

124 589 16 63 00

Conventional tester

Multimeter	e.g. Sun, DMM 5

Note

The test program should be conducted if the cause of the fault is unknown or if the interior temperature selected with the selector wheel is not obtained, or the air flaps (e.g. footwell flaps) fail to open.

Before carrying out the following test, check fuses 5, 7 and 12. In addition it is advisable to manually check the blower and flap control according to (83-601).

Preparation for testing

Before the test, check the ventilation blower for the temperature sensor interior air. To do so, switch on ignition and place a small piece of paper approx. 1cm² (arrow) against the grid of the temperature sensor interior air. The paper must stay in this position. If not, remove glove box and check ventilation blower (connections and function).

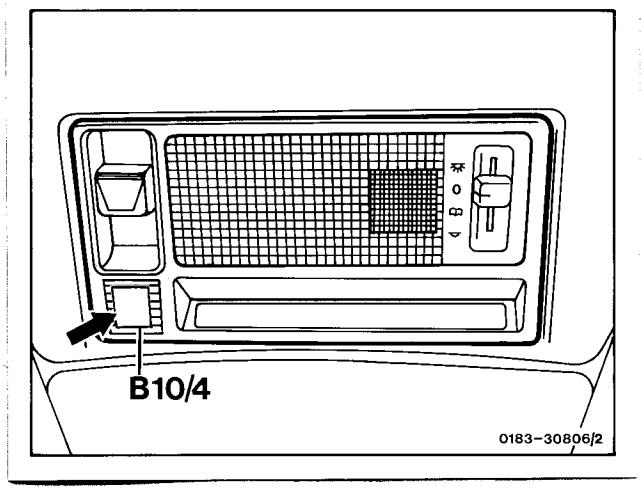

1 Remove control unit (83-635).

2 Connect socket box to cable harness for the control unit. The control unit must remain disconnected until test step 7.

Test step 1

Check temperature sensor interior air (B10/4) with cables.

Ohmmeter on jacks	Ambient temperature in °C	Nominal value in kΩ
1 and 17	+ 10	18.3 – 21.5
	+ 15	15.2 – 17.2
	+ 20	11.5 – 13.5
	+ 25	9.5 – 10.5
	+ 30	7.5 – 8.5
	+ 35	6.0 – 7.0
	+ 40	4.5 – 5.5
	+ 45	3.5 – 4.5

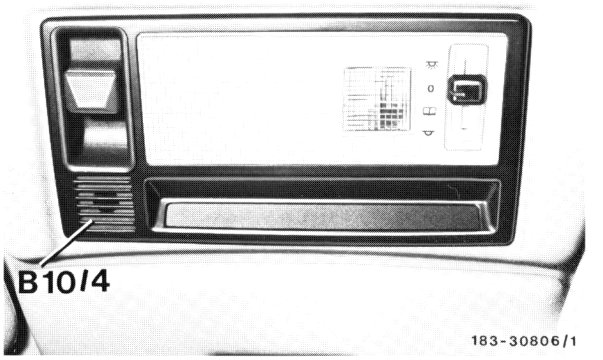

Yes	No

1. Check cable 2 (grey/yellow) and 10 (brown/yellow) of the right coupling for interruption and cable 2 for ground short.
2. Renew temperature sensor interior air (B10/4).

Test step 2

Check temperature sensor outside air (B10/5) with cables.

Ohmmeter on jacks	Ambient temperature in °C	Nominal value in kΩ
1 and 24	+ 10	5.0 – 6.0
	+ 15	4.0 – 4.6
	+ 20	3.1 – 3.9
	+ 25	2.4 – 3.0
	+ 30	1.9 – 2.3
	+ 35	1.6 – 2.0
	+ 40	1.4 – 1.6
	+ 45	1.1 – 1.3

Yes	No

1. Check cable 9 (grey/black) of the right coupling for interruption or ground short.
2. Renew temperature sensor outside air (B10/5).

Test step 3[1]

Check temperature sensor evaporator (B10/6) with cables.

Ohmmeter on jacks	Ambient temperature in °C	Nominal value in kΩ
1 and 19	+ 10	18.3 – 21.5
	+ 15	15.2 – 17.2
	+ 20	11.5 – 13.5
	+ 25	9.5 – 10.5
	+ 30	7.5 – 8.5
	+ 35	6.0 – 7.0
	+ 40	4.5 – 5.5
	+ 45	3.5 – 4.5

Yes	No

1. Check cable 4 (grey/red) of the right coupling for interruption and ground short.
2. Renew temperature sensor evaporator (B10/6).

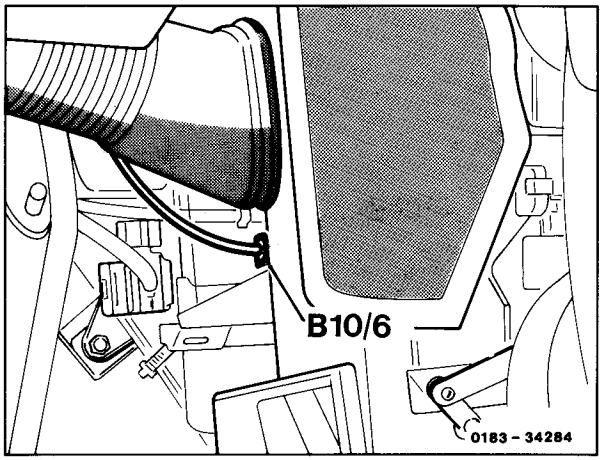

83.0742-604-5

Test step 4

Check temperature sensor heat exchanger (B10/1) with cables.

Ohmmeter on jacks	Ambient temperature in °C	Nominal value in kΩ
1 and 22	+ 10	18.3 – 21.5
	+ 15	15.2 – 17.2
	+ 20	11.5 – 13.5
	+ 25	9.5 – 10.5
	+ 30	7.5 – 8.5
	+ 35	6.0 – 7.0
	+ 40	4.5 – 5.5
	+ 45	3.5 – 4.5

Yes	No

1. Check cable 7 (grey/green) of the right coupling for interruption and ground short.
2. Renew temperature sensor heat exchanger (B10/1).

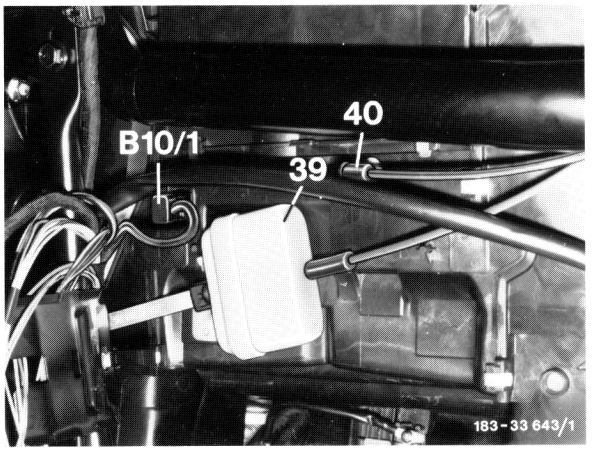

Test step 5

On vehicles up to 08/87, check temperature sensor coolant indication (B13) with cables.
On vehicles as of 09/87, check temperature sensor coolant (B11/7 or B10/8) with cables.

Ohm-meter on jacks	Coolant temperat. in °C	Nominal value up to 08/87	Nominal value as of 09/87
1 and 23	20	100 – 120 Ω	5.0 – 8.0 kΩ
	60	60 – 70 Ω	900 – 1800 Ω
	85	30 – 45 Ω	460 – 650 Ω
	100	15 – 25 Ω	300 – 400 Ω
	110	12 – 18 Ω	230 – 290 Ω
	120	9 – 15 Ω	180 – 220 Ω
	130	5 – 10 Ω	135 – 175 Ω

Yes	No

1. Check cable 8 (green or blue/grey) of the right coupling for interruption and ground short.
2. Renew temperature sensor coolant indication (B13) or temperature sensor coolant (B11/7 or B10/8).

Engine 102 up to 08/87

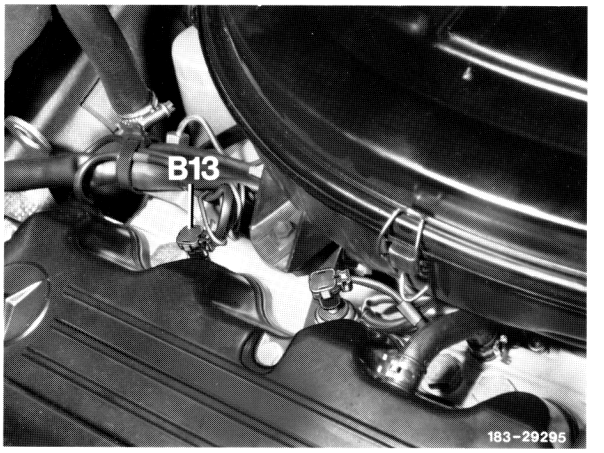

Engine 103 up to 08/87

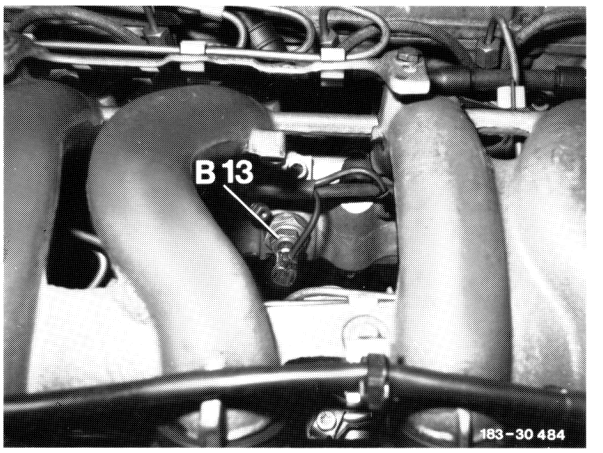

Engines 601, 602, 603 up to 08/87

Engine 102 as of 09/87

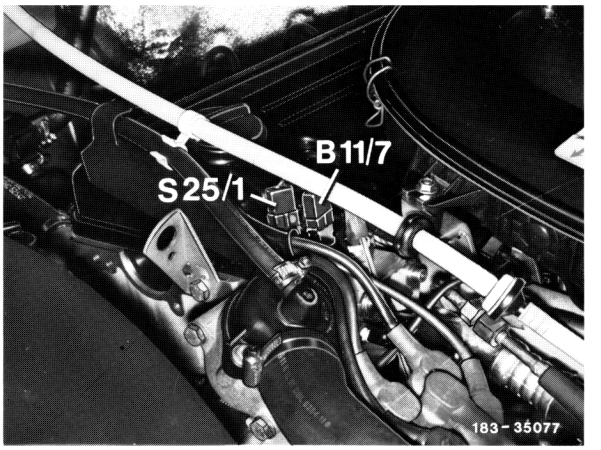

Engine 103 as of 09/87

Engines 601, 602, 603
except TURBO as of 09/87

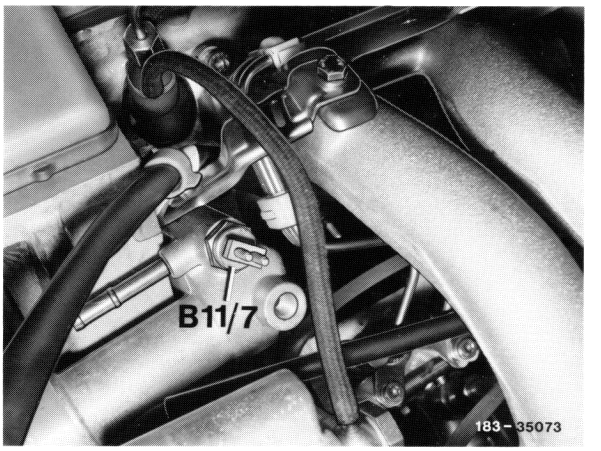

Engine 603 TURBO as of 09/87

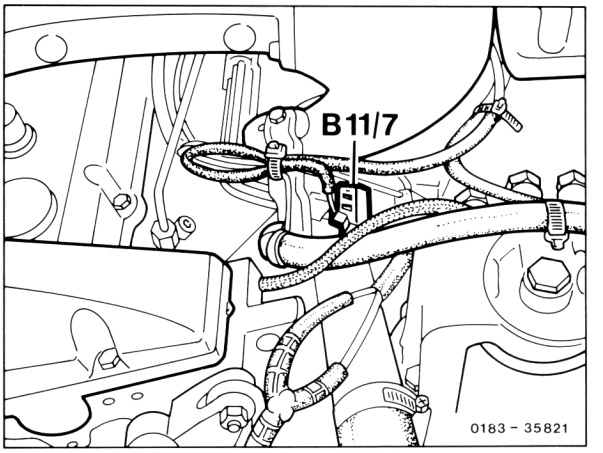

83.0742-604/8

Test step 6

Check switchover valve block 7-fold (Y7) and cables for interruption and ground short.

Ohmmeter on jacks	Nominal value in Ω
13 and 2	50 – 80
13 and 3	
13 and 4	
13 and 5	
13 and 6	
13 and 8	
13 and 15	

Yes	No

1. Check cables 1 to 6 and 8 of the left coupling for interruption and ground short.
2. Renew switchover valve block 7-fold (Y7).

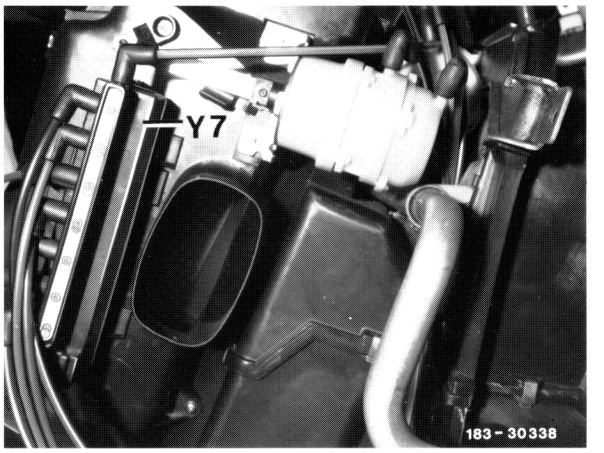

Test step 7

Check mono valve (Y19) and cables for interruption and ground short.

Ohmmeter on jacks	Nominal value in Ω
9 and 13	11–19

Yes	No

1. Check cable 9 (yellow/green) of the left coupling for interruption and ground short.
2. Renew mono valve (Y19).

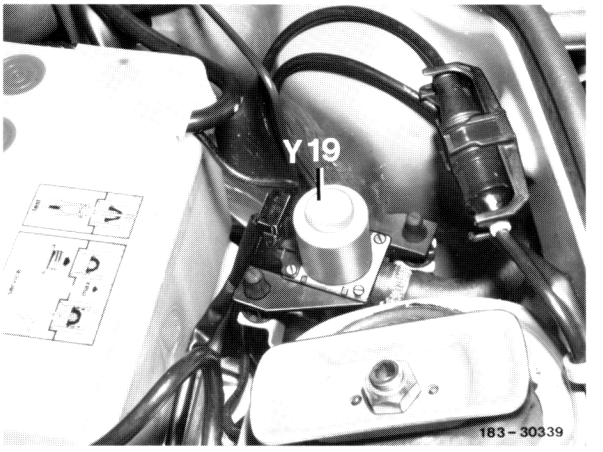

83.0742-604/9

Preparation for test step 8 - 21

Connect both couplings of the test cable to the automatic climate control unit and run engine at idle speed.

Test step 8

Check voltage supply for control unit.

Voltmeter on jacks	Nominal value
1 (–)	> 11 V
13 (+)	

Yes	No

Fuse no. 7 defective or cable interrupted.

Test step 9

Check Hall-sensor (B6) with cable.

Voltmeter on jacks	Roll vehicle approx. 1 m	Alternating nominal value
18 (–)		> 11 V
13 (+)		< 1.0 V

Yes	No

1. Check cable 3 (green/yellow) of the right coupling for interruption and ground short.
2. Renew Hall-sensor (B6) on speedometer.

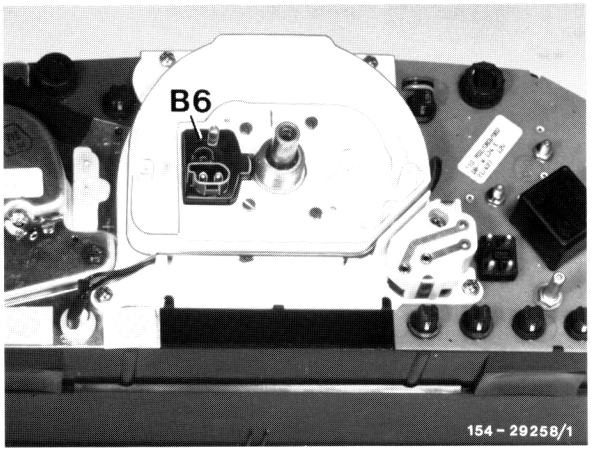

Test step 10

Check ground activation of recirculated air switch (S24).

Voltmeter on jacks	Press recirculated air switch (S24) and hold	Nominal value
21 (–) 13 (+)		> 11 V

Yes	No

1. Check cable 6 (grey/purple) for interruption.
2. Renew recirculated air switch (S24).

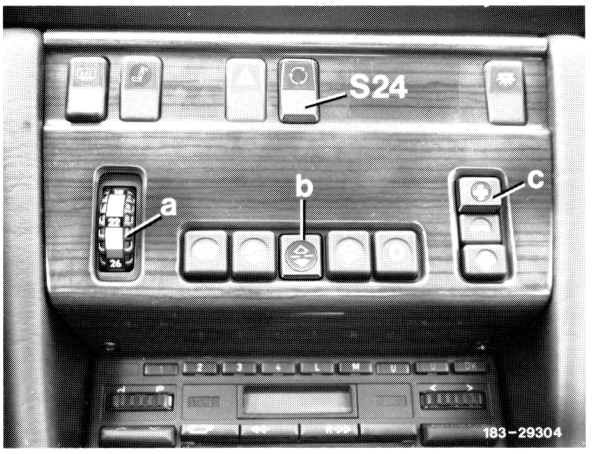

Test step 11

Check ground activation for mono valve (Y19).

Voltmeter on jacks	Function selection button	Nominal value
9 (–) 13 (+)	0	> 11 V

Yes	No

1. Mono valve short circuit.
2. Renew control unit.

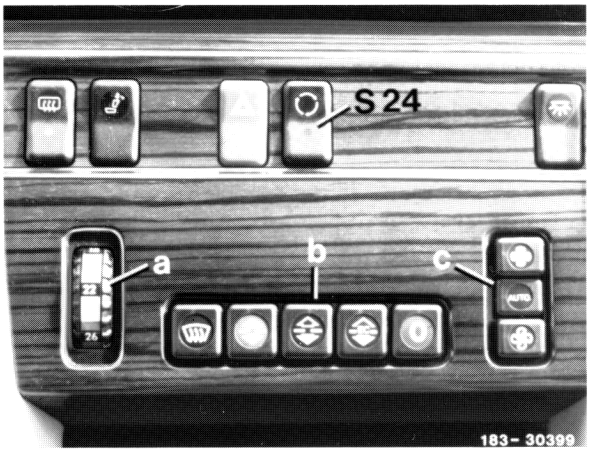

Test step 12

Check ground activation for circulating pump (M13).

Voltmeter on jacks	Function selection button	Nominal value
10 (–) 13 (+)		> 11 V

Yes	No

Additionally test the circulating pump operation by feeling with the hand.

1. Circulating pump short circuit (renew)
2. Renew control unit.

Test step 13

Check ground activation for switchover valve of the fresh/recirculated air flap, small lift (Y7.1).

Voltmeter on jacks	Function selection button	Nominal value
15 (–) 13 (+)	0	> 11 V

Yes	No

1. Switchover valve block short circuit (renew).
2. Renew control unit.

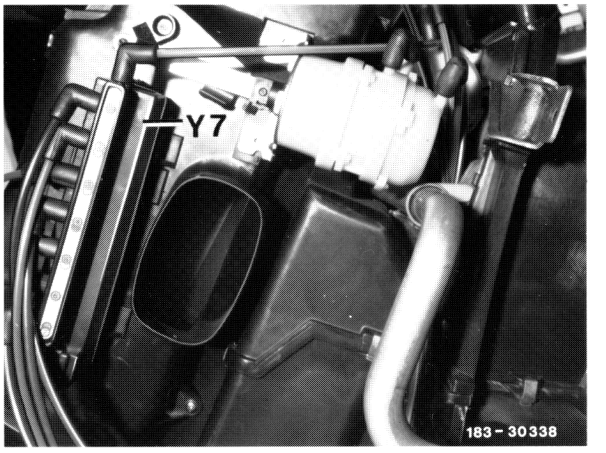

Test step 14

Check ground activation for switchover valve of the fresh/recirculated air flap, large lift, (Y7.2).

Voltmeter on jacks	Function selection button	Nominal value
2 (–) 13 (+)	0	> 11 V

Yes	No

1. Switchover valve block short circuit (renew).
2. Renew control unit.

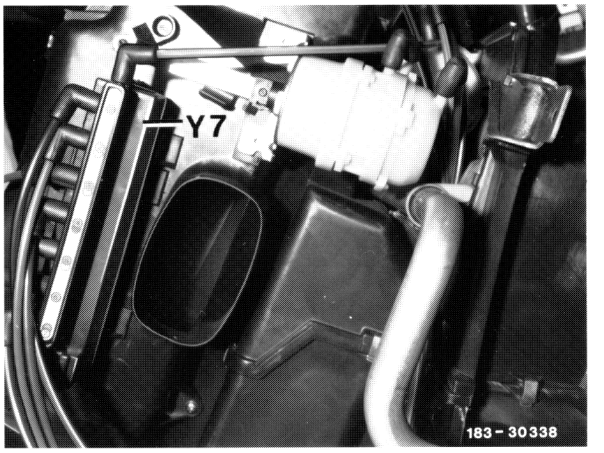

Test step 15

Check ground activation for switchover valve of the footwell flaps (Y7.3).

Voltmeter on jacks	Function selection button	Nominal value each
3 (–) 13 (+)	then and selector wheel in "MAX"	> 11 V

Yes	No

1. Switchover valve block short circuit (renew).
2. Renew control unit.

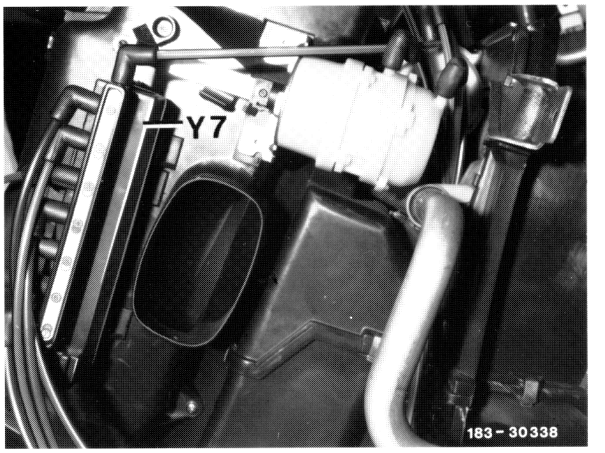

Test step 16

Check ground activation for switchover valve of the center nozzle flap (Y7.4).

Voltmeter on jacks	Function selection button	Nominal value
4 (–) 13 (+)	selector wheel in "MIN"	> 11 V

Yes	No

1. Switchover valve block short circuit (renew).
2. Renew control unit.

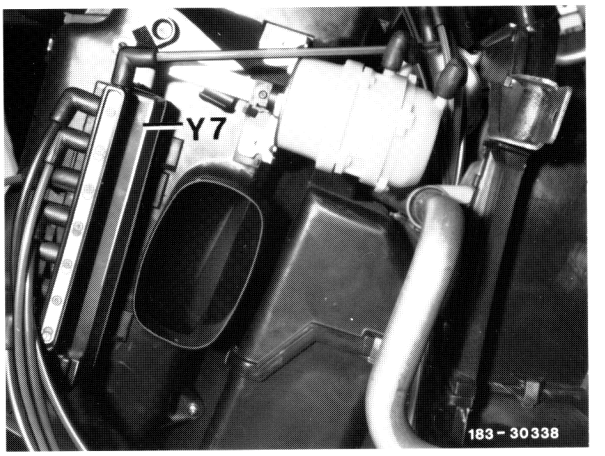

Test step 17

Check ground activation for switchover valve of the defroster nozzle flaps, large lift (Y7.5).

Voltmeter on jacks	Function selection button	Nominal value each
5 (–) 13 (+)	selector wheel in "MIN"	> 11 V

Yes	No

1. Switchover valve block short circuit (renew).
2. Renew control unit.

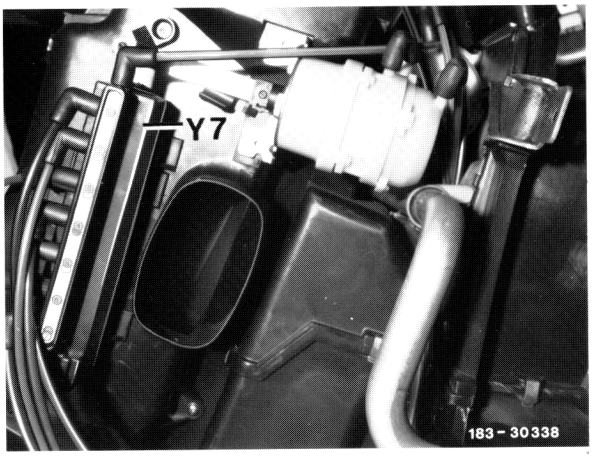

Test step 18

Check ground activation for switchover valve of the diverter air flap (Y7.6).

Voltmeter on jacks	Function selection button	Nominal value
6 (–) 13 (+)	Engage selector wheel in "MIN" (at room temperature > + 20°C)	> 11 V

Yes	No

1. Switchover valve block short circuit (renew).

2. Renew control unit.

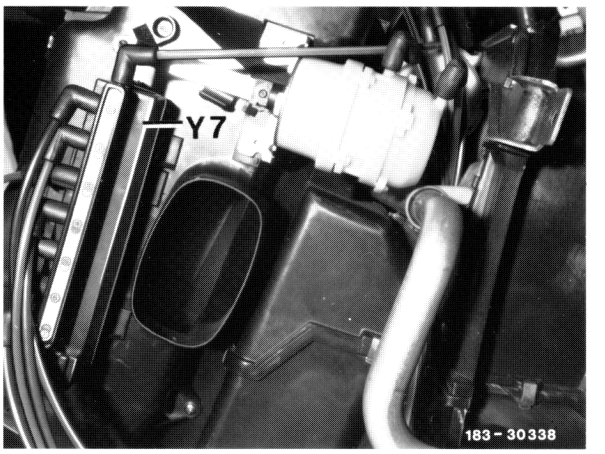

Test step 19

Check ground activation for switchover valve of the defroster nozzle flaps, small lift, Y7.7).

Voltmeter on jacks	Function selection button	Nominal value
8 (–) 13 (+)	Selector wheel engaged in "MIN"	> 11 V

Yes	No

1. Switchover valve block short-circuit (renew).

2. Renew control unit.

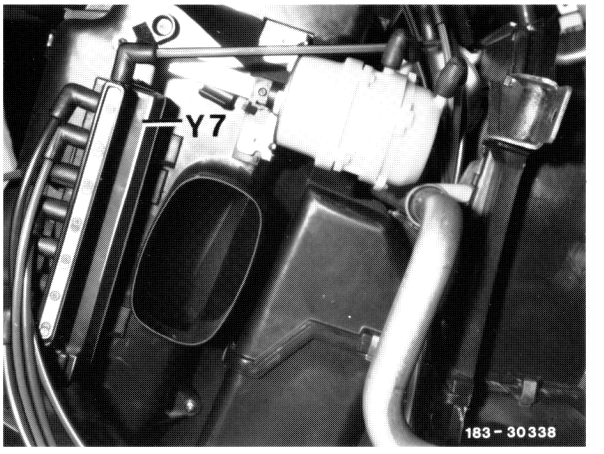

Test step 20

Check control voltage for blower regulator (N29).

Voltmeter on jacks	Function selection button	Nominal value
1 (–)		1-1.2 V
12 (+)		1-1.2 V
	AUTO. and selector wheel "MAX"	after approx. 10 s up to 4.7 V
	AUTO. and adjust selector wheel according to the interior room temperature	after approx. 60 s approx. 1.2 V
	AUTO. and	6.0-10 V approx. 5 V

Yes	No

→ Renew control unit.

Test step 21

Check ground activation for control unit compressor cutoff (N6).

Voltmeter on jacks	Function selection button	Nominal value after 20 s
7 (–)		> 11 V
13 (+)	and selector wheel to "MIN"	

Yes	No

→ End of the test

→ Renew control unit.

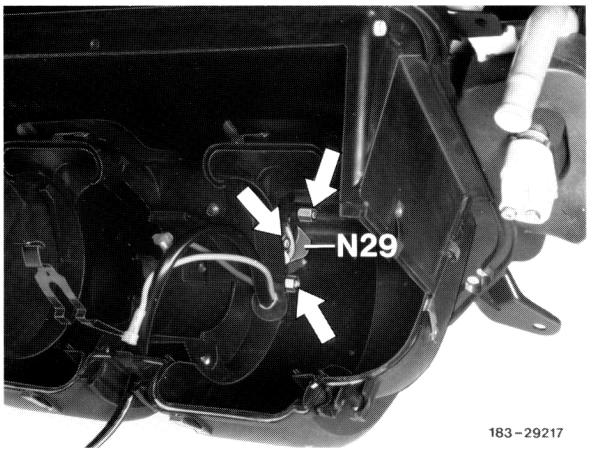

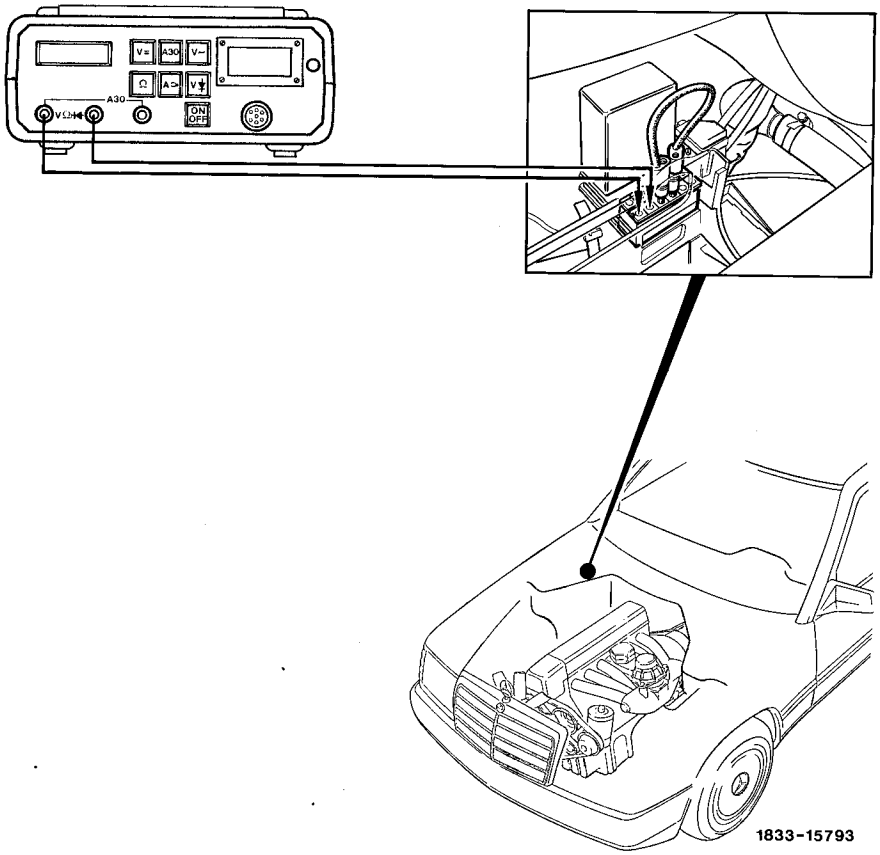

Test condition	Observe
A. Compressor cutoff if the electromagnetic coupling of the refrigerant compressor is not switched on .	Check, test steps 1 to 6
B. Switching off of the electromagnetic coupling of the refrigerant compressor via the compressor cutoff control unit (N6)	Check, items 1 to 5

Conventional tester

Multimeter	e.g. Sun, DMM 5

Test condition
A precondition for the test is that the activation of the refrigerant compressor functions properly.

Checking the activation
Switch on ignition, press function button and engage temperature selector wheel in "MIN".

Connect voltmeter to plus and check both pressure switch (S31/1) connections for battery voltage. If both connections do not show any voltage, check the activation of the refrigerant compressor (see Checking electric components of the automatic climate control, test step 21, job No. 83-604).

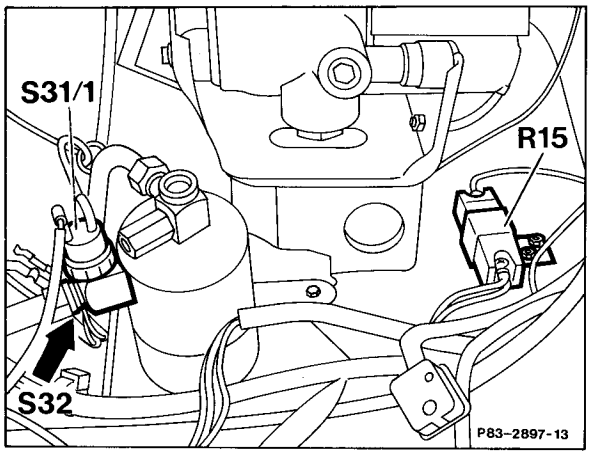

If voltage is measured only at one connection, check high pressure of the air conditioner. At a pressure > 3 bar, renew pressure switch (S31/1). At a pressure < 2 bar, check air conditioner, recycling, check system for leaks and replenish (maintenance manual).

A. Checking compressor cutoff if the electromagnetic coupling of the refrigerant compressor is not switched on.

Test step 1
Check voltage supply for control unit compressor cutoff (N6).

Pull control unit (N6) off the 12-pole coupling. Connect voltmeter to terminal 5 (+) and terminal 1 (–) of the 12-pole coupling.

Nominal value: battery voltage

Yes	No

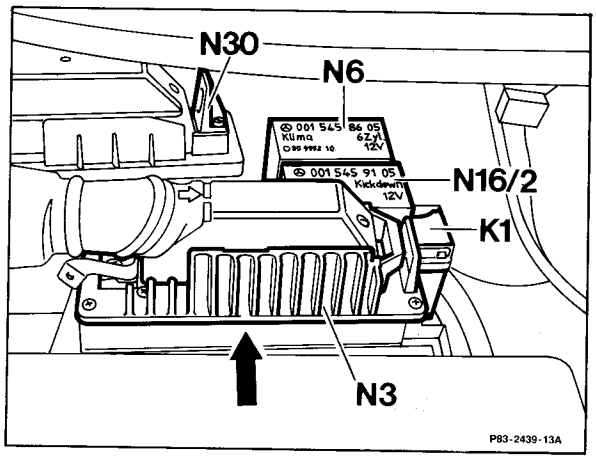

Check cable harness according to the wiring diagrams, repair if required.

Test step 2
Check control voltage for the refrigerant compressor from the pressure switch refrigerant compressor (S31/1) to the control unit (N6).

Connect voltmeter to terminal 5 (+) and 10 (–) of the 12-pole coupling.

Nominal value: battery voltage

Yes	No

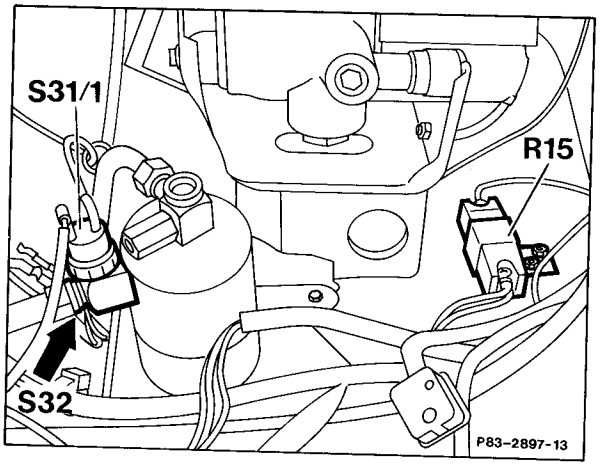

Check cable harness from terminal 10 to pressure switch (S31/1), repair if required.

Test step 3
Check electromagnetic coupling of the refrigerant compressor and supply cable.

Bridge terminals 5 and 7 on the 12-pole coupling. Briefly start engine and check if the refrigerant compressor is operating.

Yes	No

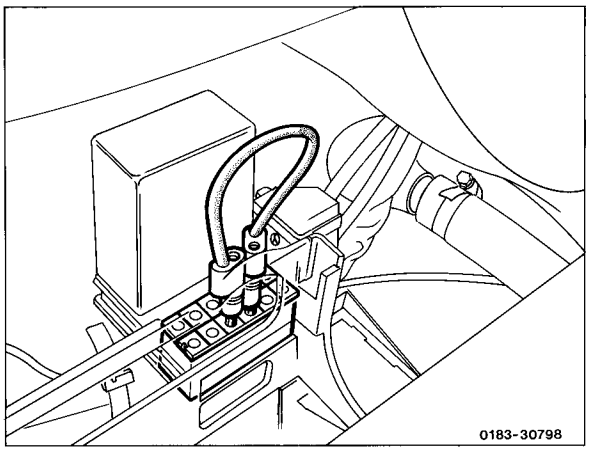

Check electromagnetic coupling of the refrigerant compressor, renew if required or repair supply cable to the refrigerant compressor.

Test step 4
Check speed sensor refrigerant compressor (L4).

Connect voltmeter to terminals 9 and 11 of the 12-pole coupling and adjust voltmeter to alternating voltage ~. Terminals 5 and 7 of the 12-pole coupling remain bridged. Allow engine to run at idle speed (approx. 750/min).

Nominal value: at least 0.3 V AC

Yes	No

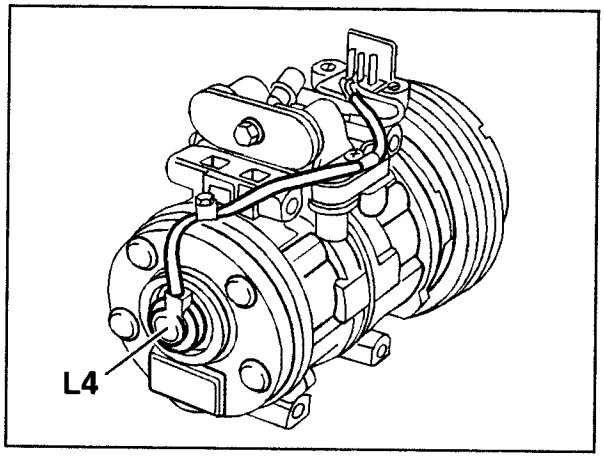

P83-6251-13

Stop engine and check resistance of the speed sensor (L4) on terminals 9 and 11. Nominal value: 530 to 650 Ω, renew speed sensor if required.

Test step 5
Vehicles with gasoline engine:
Check speed signal (TD).
Connect voltmeter to terminals 1 (–) and 2 (+) of the 12-pole coupling and set the voltmeter to **direct voltage**. Run engine at idle speed (approx. 750/min).
Nominal value: approx. 8.5 V.

Vehicles with diesel engine:
Check speed sensor (L3) on the starter ring gear or check speed signal. Connect voltmeter to terminals 1 and 2 of the 12-pole coupling and set voltmeter to alternating voltage. Run engine at idle speed (approx. 750/min).
Nominal value: > 4 V AC with rising speed, rising voltage (with ELR < 3 V AC)

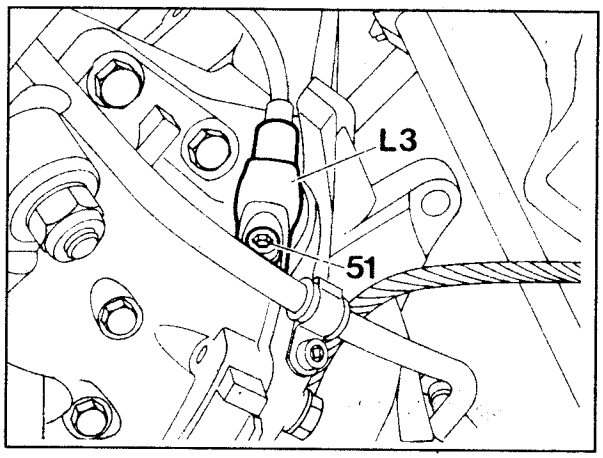

P07-2489-13

Yes	No

Vehicles with gasoline engine:
Remove interruption to the cable connector of the diagnostic socket.
Vehicles with diesel engine:
Switch off engine and check resistance of the speed sensor (L3) on terminals 1 and 2.

Nominal value: 1.9 ± 0.2 kΩ, if required.

Renew speed sensor (L3).
Thereafter, check cable to the speed sensor (L3) on terminals 1 and 2 for ground short. To do so, separate the 2-pole plug connection on the speed sensor (L3).

Nominal value: ∞ Ω,
rectify ground short if required.

Test step 6
On vehicles up to 08/87, check emergency cut-out temperature switch for ground short, except on vehicles with engine 102 without RÜF/KAT and engine 601

Connect voltmeter to terminal 5 (+) and terminal 12 (–) of the 12-pole coupling.

Nominal value: < 1 volt

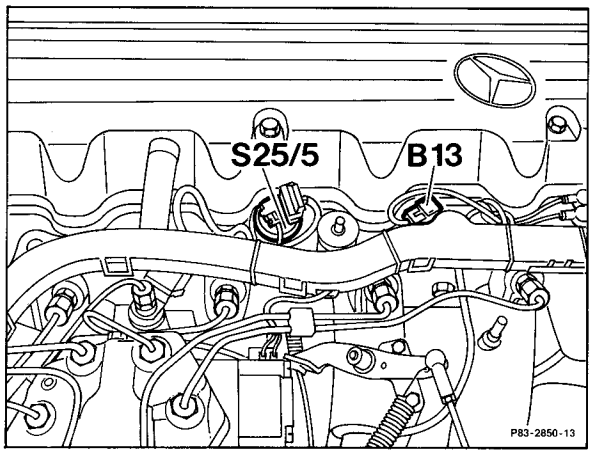

Yes	No

No → Renew temperature switch for emergency cut-out (arrangement, see section B) and check cable to the temperature switch for ground short, repair if required.

Yes → Renew control unit (N6).

Check automatic climate control function (83-601).

End of test.

B. Checking the cut-out of the electromagnetic coupling of the refrigerant compressor via the compressor cut-out control unit (N6).

Test step 1
Checking cut-out due to a slipping poly-V-belt.
Run engine at idle speed.

Press function selection button, engage selector wheel in the position "MAX" and switch on the fresh/recirculated air switch.

Spray a jet of water between the V-belt and the belt pulley of the electromagnetic coupling of the refrigerant compressor until the refrigerant compressor is switched off, while intermittently accelerating the engine.

Desired function: Refrigerant compressor is switched off.

Yes	No

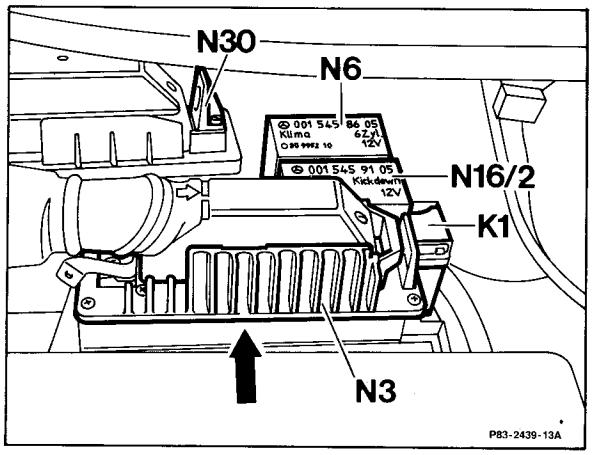

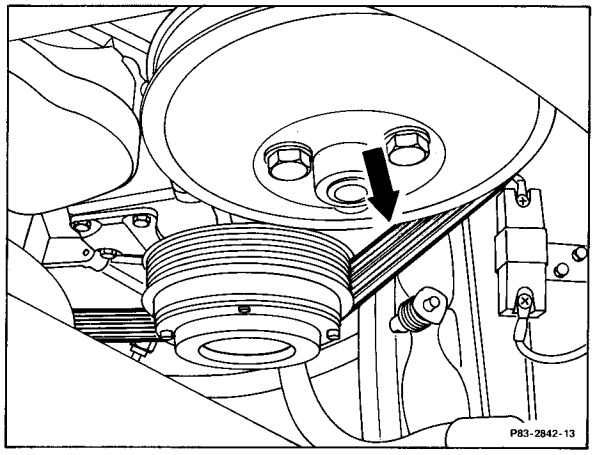

Note
After the refrigerant compressor has been switched off, the refrigerant compressor will only be switched on again after the engine has been switched off and restarted.

Renew control unit (N6).

Test step 2

Check cut-out by temperature switch.

On vehicles from 09/85 to 08/87, except with engine 102 without RÜF/KAT and engine 601, again start the engine and pull 1-pole coupling off the temperature switch (S25/3, S25/5 and S25/11) and connect to ground.

Desired function: Refrigerant compressor is switched off.

Yes	No

Renew control unit (N6) and check cable to the temperature switch for interruption, repair if required.

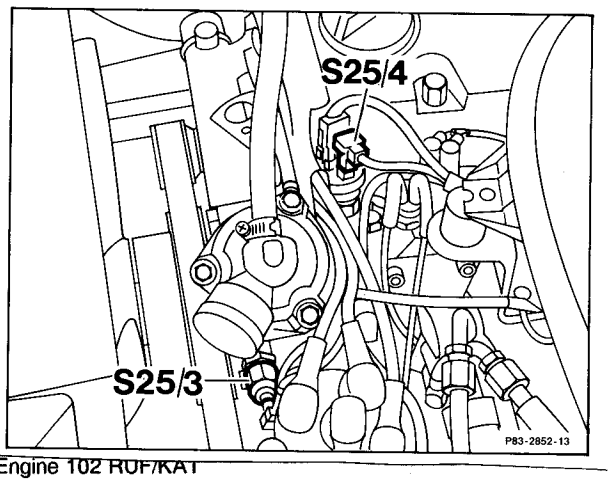

Engine 102 RÜF/KAT

S25/3 Temperature switch 110°C up to 09/87

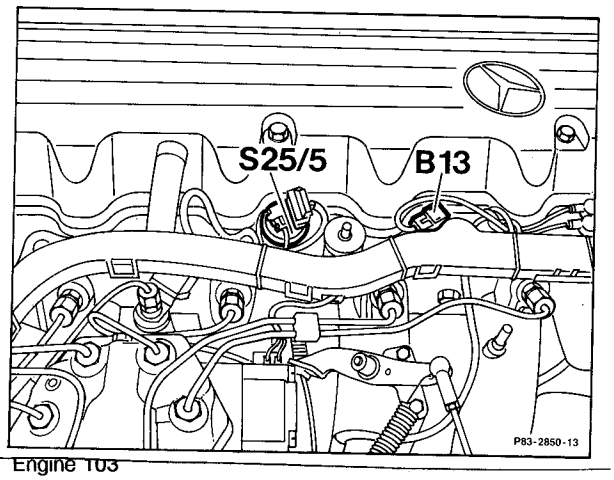

Engine 103

S25/5 Temperature switch 105/115°C

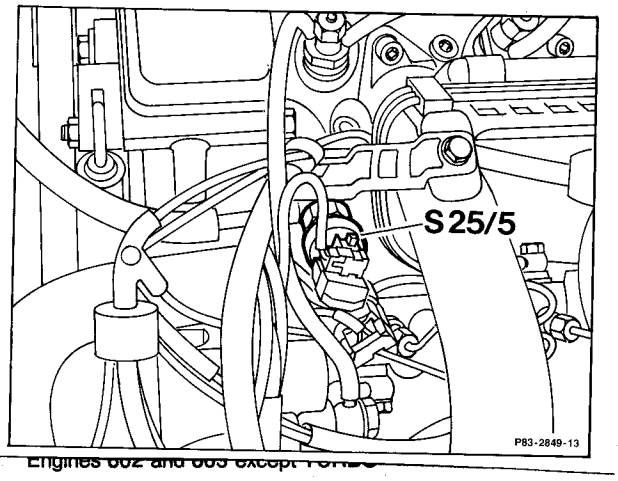

Engines 602 and 603 except

S25/5 Temperature switch 105/115°C

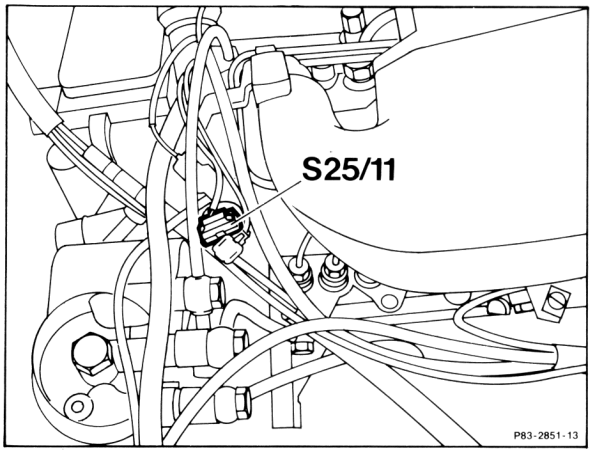

Engine 603 TURBO
S25/5 Temperature switch 105/115°C

Test step 3
Checking cut-out by microswitch (S27/1) on vehicles with diesel engine and automatic transmission.

Run engine at idle speed. Observe electromagnetic coupling of the refrigerant compressor and accelerate briefly.

Desired function: The electromagnetic coupling must remain switched off up to 2150/min and should be switched on thereafter.

Yes	No

Renew microswitch (S27/1) or control unit (N6) and check its cables for interruption and repair if required.

End of the test.

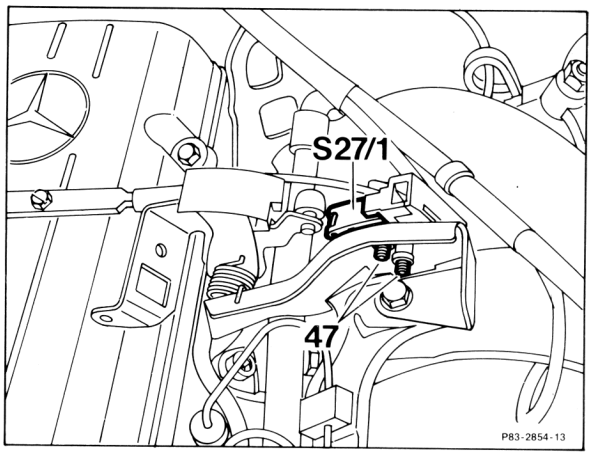

Model 124.1/3 except TURBO
S27/1 Microswitch compressor cut-out

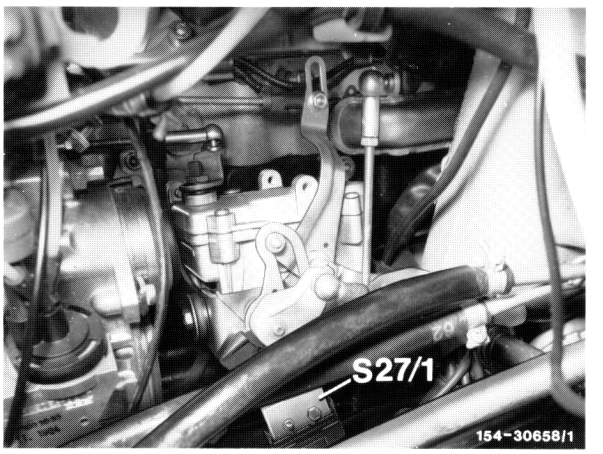

Model 124.1/3 TURBO
S27/1 Microswitch compressor cut-out

83.0742-6059

C. Checking the cut-out of the electromagnetic coupling of the refrigerant compressor via the engine unit control unit (MAS).

Socket box connection diagram

Disconnect control unit (N16) and intermediate contact test cable set (002).

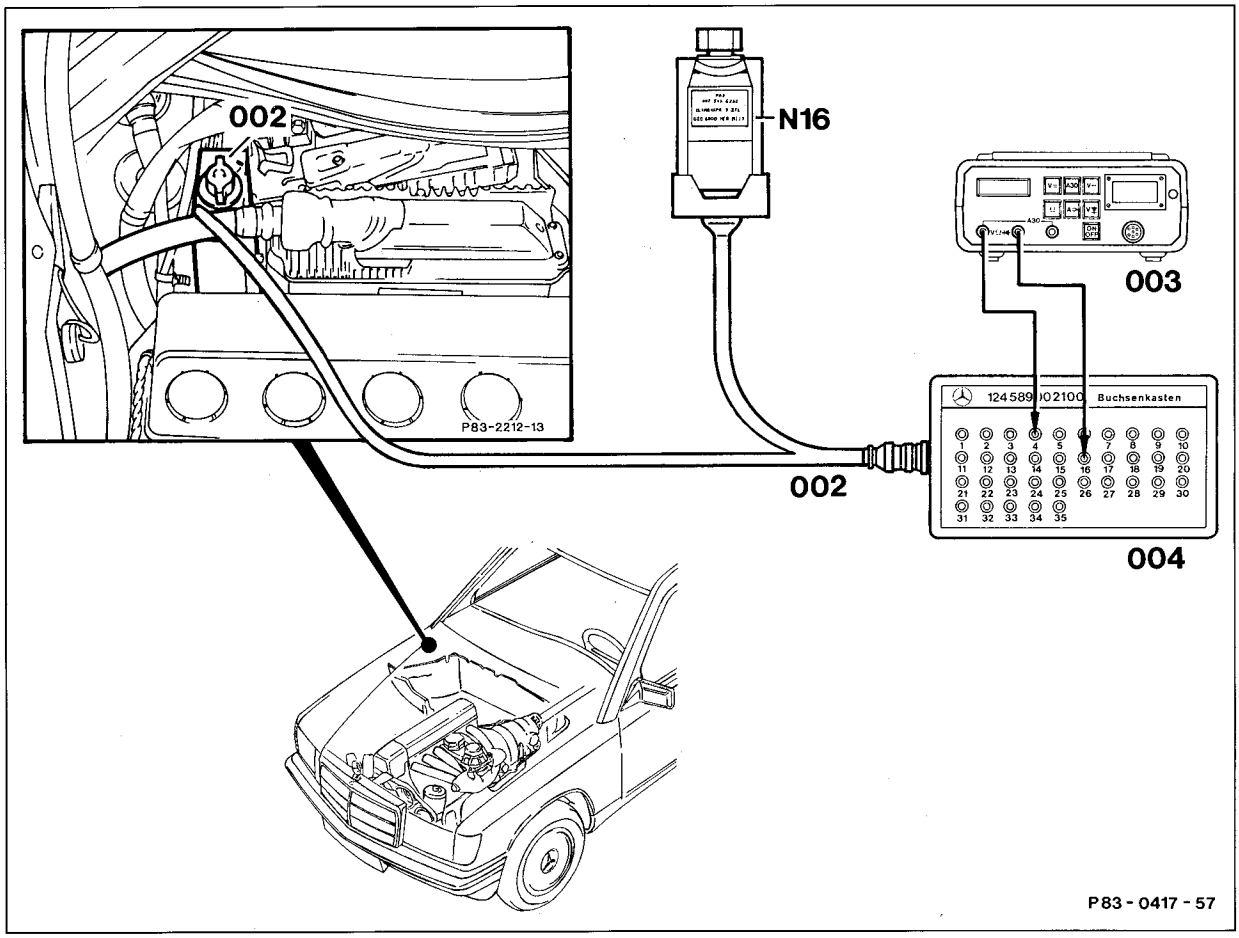

002	Test cable
003	Multimeter
004	Socket box
N16	Engine unit control unit (MAS)

Special tools

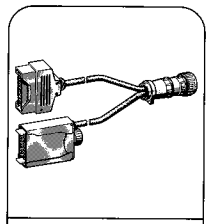

129 589 05 63 00
15

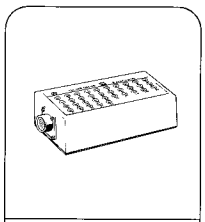

124 589 00 21 00
54

Test step/ fault code	Scope of test	Measuring instrument / test connection	Operation Requirement	Nominal value	Possible cause/remedy
1	Voltage supply for engine unit control unit (MAS)	4 — 21	Ignition: On	>10 V	Fuse (2) defective. Cable from engine unit control unit (N16) to fuse (2) via plug connection (X26).
2	Ground control from pushbutton control unit	3 — 21	Switch on ignition and refrigerant compressor with the function selector	>10 V	Cable from pushbutton control unit (N19/1) to MAS (N16) via plug connection (X26) via pressure switch (S31/1).
3	Electro-magnetic coupling of refrigerant compressor (A9k1)	21 — 22 5 — 6	Engine at idle	Refrigerant compressor must operate	Electromagnetic coupling defective. Cable from MAS to electromagnetic coupling (A9k1)

Test step/ fault code	Scope of test	Measuring instrument / test connection	Operation Requirement	Nominal value	Possible cause/remedy
4	Refrigerant compressor speed sensor (A9/1)	21 — 22 5 — 6	Engine at idle (approx. 750 min)	> 0.3 V~	Speed sensor defective (resistance of speed sensor: 530-650 Ω or approx. 810 Ω). Cable from MAS to speed sensor (A9/1). Refrigerant compressor defective
5	Check TD or TN speed signal	4 — 16	Engine at idle (approx. 750 min)	> 0.3 V~	Cable from control unit (EZL) to MAS (N16)

D. Checking the cutoff of the electromagnetic coupling of the refrigerant compressor via the base module (GM)

On models 124.034/036, the compressor cuts off via the base module (N16/1). Checking the compressor cutoff is included in Checking the base module (see chassis diagnosis manual).

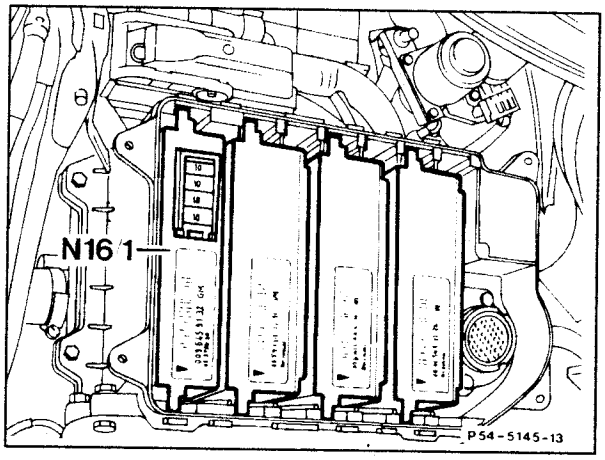

P54-5145-13

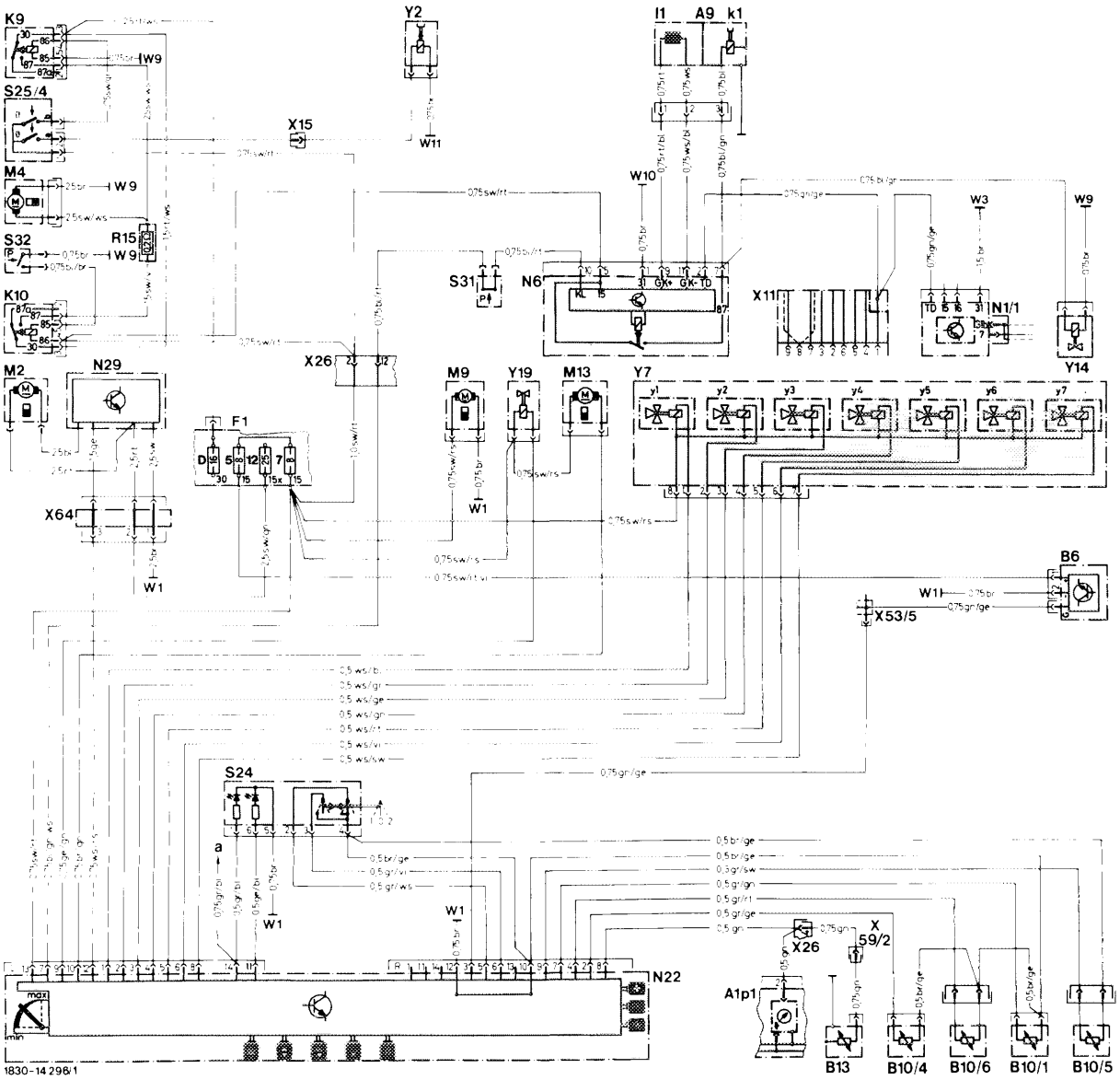

Models 124.020 standard version up to July 1987

A1	p1	Temperature display coolant
A9		Refrigerant compressor
	k1	Electromagnetic coupling
	I1	Rpm sensor
B6		Hall-sensor, speed
B10/1		Temperature sensor, heat exchanger
B10/4		Temperature sensor, interior air
B10/5		Temperature sensor, outside air
B10/6		Temperature sensor, evaporator
B13		Temperature sensor, coolant indicator
F1		Fuse and relay box
		Fuse 5, terminal 15
		Fuse 7, terminal 15
		Fuse 12, terminal 15X
		Fuse D, terminal 30
K9		Relay, auxiliary fan
K10		Relay, auxiliary fan preresistor
M2		Blower motor
M4		Auxiliary fan
M9		Ventilation blower, temperature sensor interior air
M13		Circulating pump
N1/1		Switching unit, transistorized ignition
N6		Control unit, compressor cutout
N22		Automatic climate control unit
N29		Electronic blower regulator
R15		Preresistor, auxiliary fan
S24		Switch, fresh/recirculated air
S25/4		Temperature switch 100/110 °C
S31/1		Pressure switch, refrigerant compressor, OFF 2.0 bar/ON 2.6 bar
S32		Pressure switch, auxiliary fan OFF 15.0 bar/ON 20.0 bar

W1	Main ground (behind instrument cluster)
W3	Ground, wheelhouse front left (ignition coil)
W9	Ground, front left (near headlamp unit)
W10	Ground, battery
W11	Ground, engine (electrical cables screwed on)

Ground connection without designation, component directly on engine or body

X11	Diagnostic socket/connector terminal TD
X15	Connector engine fan/temperature switch 100 °C
X26	Connector, cable harness
X53/5	Multiple connector/Hall-sensor 6-pole
X59/2	Connector, temperature sensor coolant
X64	Connector, blower regulator/interior harness
Y2	Electromagnetic coupling, engine fan
Y7	Switchover valve block, 7-fold
y1	Fresh/recirculated air flap, small lift
y2	Fresh/recirculated air flap, large lift
y3	Footwell flaps
y4	Center nozzle flaps
y5	Defroster nozzle flaps, large lift
y6	Diverter air flap
y7	Defroster nozzle flaps, small lift
Y14	Switchover valve, speed stabilization
Y19	Mono valve, automatic climate control
a	To X6 connector, terminal 58d, 2-pole

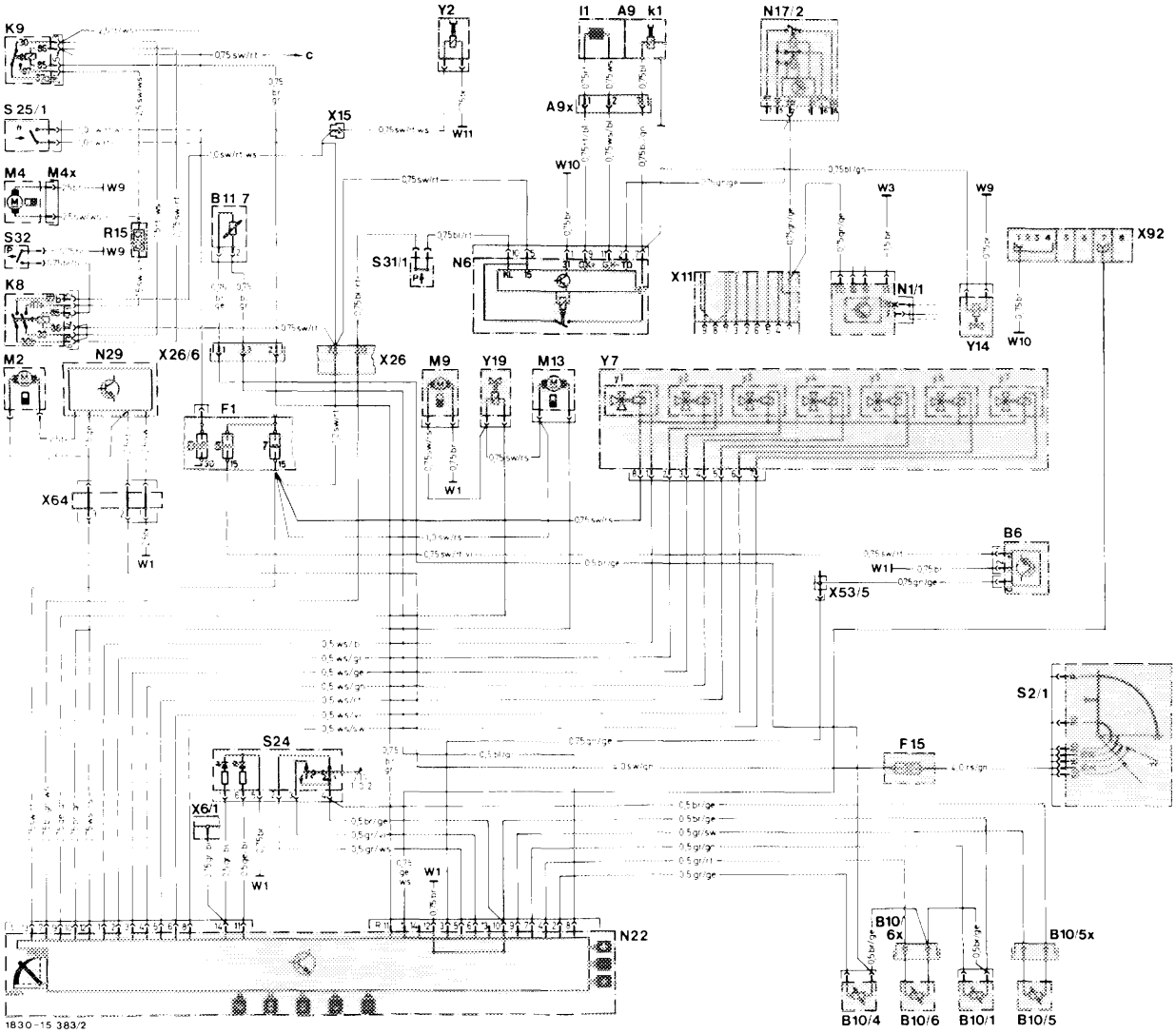

Models 124.020/080 standard version as of August 1987

A9		Refrigerant compressor
	k1	Electromagnetic coupling
	I1	Rpm sensor
A9x		Connector, refrigerant compressor
B6		Hall-sensor, speed
B10/1		Temperature sensor, heat exchanger
B10/4		Temperature sensor, interior air
B10/5		Temperature sensor, outside air
B10/5x		Connector, temperature sensor outside air
B10/6		Temperature sensor, evaporator
B10/6x		Connector, temperature sensor evaporator
B11/7		Temperature sensor, coolant (blue)
F1		Fuse and relay box Fuse 5: 8 A Fuse 7: 8 A Fuse D: 16 A
F15		Auxiliary fuse holder, blower motor
K8		Double contact relay, auxiliary fan, magnetic coupling, engine fan
K9		Relay, auxiliary fan
M2		Blower motor
M4		Auxiliary fan
M9		Ventilation blower, temperature sensor interior air
M13		Circulating pump
N1/1		Switching unit, transistorized ignition
N6		Control unit, compressor cutout
N17/1		Relay, fuel shutoff valve with kickdown lockout
N22		Automatic climate control unit
N29		Electronic blower regulator
R15		Preresistor, auxiliary fan
S2/1		Ignition starter switch
S24		Switch, fresh/recirculated air
S25/1		Temperature switch 100 °C
S31/1		Pressure switch, refrigerant compressor, OFF 2.0/30 bar ON 2.6/22 bar
S32		Pressure switch, auxiliary fan OFF 15 bar/ON 20 bar
W1		Main ground (behind instrument cluster)
W3		Ground, wheelhouse front left (ignition coil)
W9		Ground, front left (near headlamp unit)
W10		Ground, battery
W11		Ground, engine (electrical cables screwed on)

Ground without designation, component directly on engine or body

X6/1	Connector, terminal 58D
X11	Diagnostic socket/connector terminal TD
X15	Connector, engine fan/temperature switch 100 °C
X26	Connector, engine cable harness, 12-pole
X26/6	Connector, engine cable harness, Tempmatic/automatic climate control, 3-pole
X53/5	Multiple connector/Hall-sensor
X64	Connector, blower regulator/interior cable harness
X92	Diagnostic test coupling, 8-pole (flash code)
Y2	Electromagnetic coupling, engine fan
Y7	Switchover valve block, 7-fold
y1	Fresh/recirculated air flap, small lift
y2	Fresh/recirculated air flap, large lift
y3	Footwell flaps
y4	Center nozzle flap
y5	Defroster nozzle flaps, large lift
y6	Diverter air flap
y7	Defroster nozzle flaps, small lift
Y14	Switchover valve, speed stabilization
Y19	Mono valve
c	To the washer nozzle heating left

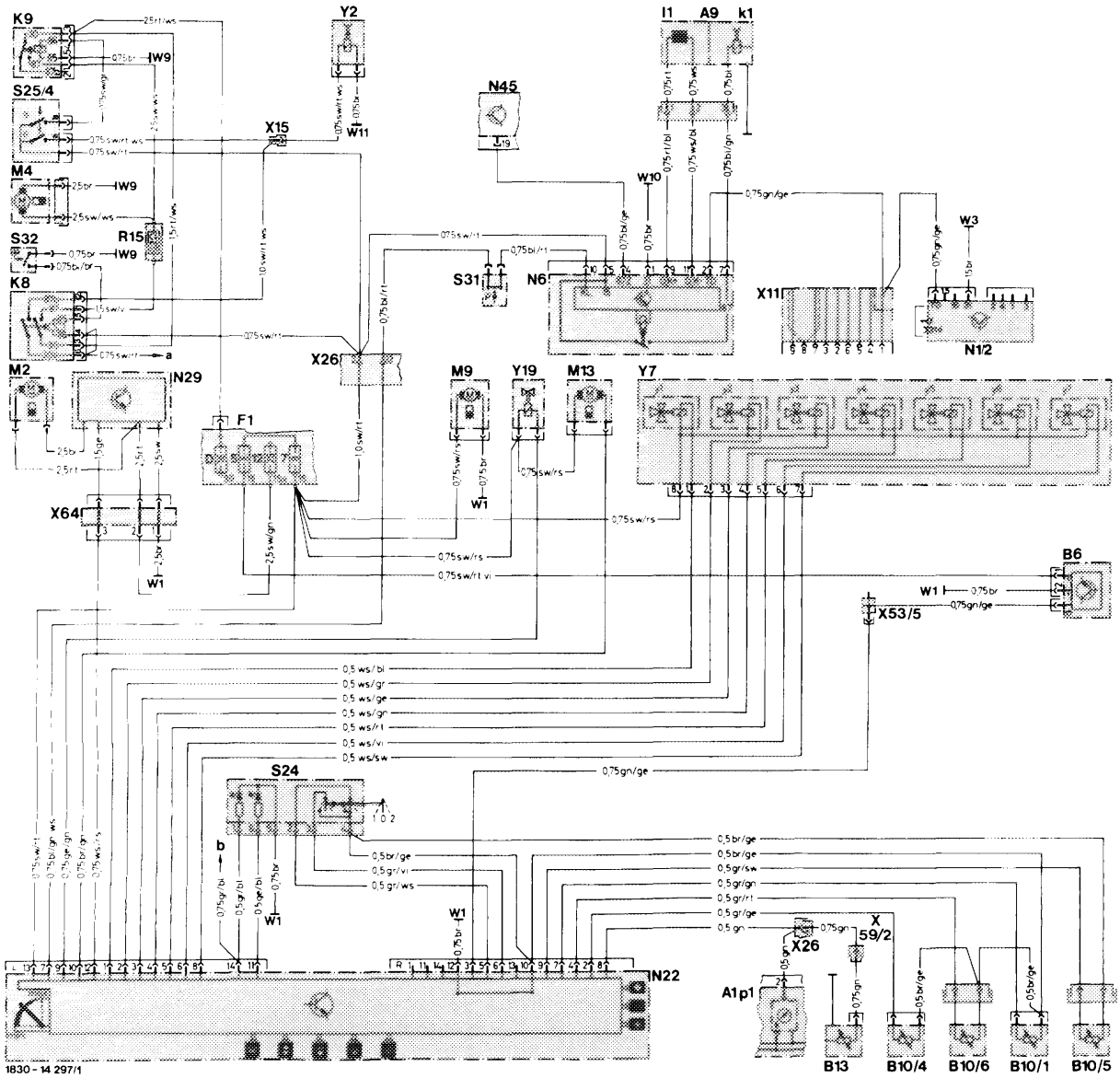

Model 124.020 RÜF/CAT up to July 1987

A1p1	Temperature indicator coolant
A9	Refrigerant compressor
k1	Electromagnetic coupling
I1	Rpm sensor
B6	Hall-sensor, speed
B10/1	Temperature sensor, heat exchanger
B10/4	Temperature sensor, interior air
B10/5	Temperature sensor, outside air
B10/6	Temperature sensor, evaporator
B13	Temperature sensor, coolant display
F1	Fuse and relay box
	Fuse 5, terminal 15
	Fuse 7, terminal 15
	Fuse 12, terminal 15X
	Fuse D, terminal 30
K8	Double contact relay, auxiliary fan, magnetic coupling engine fan
K9	Relay, auxiliary fan
M2	Blower motor
M4	Auxiliary fan
M9	Ventilation blower, temperature sensor interior air
M13	Circulating pump
N1/2	Switching unit, transistorized ignition (EZL)
N6	Control unit, compressor cutout
N22	Automatic climate control unit
N29	Electronic blower regulator
N45	Control unit, electronic carburetor
R15	Preresistor, auxiliary fan
S24	Switch, fresh/recirculated air
S25/4	Temperature switch 100/110 °C
S31/1	Pressure switch, refrigerant compressor, OFF 2.0 bar/ON 2.6 bar
S32	Pressure switch, auxiliary fan, OFF 15.0 bar/ON 20.0 bar
W1	Main ground (behind instrument cluster)
W3	Ground, wheelhouse front left (ignition coil)
W9	Ground, front left (near headlamp unit)
W10	Ground, battery
W11	Ground, engine (electrical cables screwed on)

Ground point without designation, component directly on engine or body

X11	Diagnostic socket/connector, terminal TD
X15	Connector, engine fan/temperature switch 100 °C
X26	Connector, engine cable harness, 12-pole
X53/5	Multiple connector/Hall-sensor, 6-pole
X59/2	Connector, temperature sensor coolant
X64	Connector, blower regulator/interior cable harness
Y2	Electromagnetic coupling, engine fan
Y7	Switchover valve block, 7-fold
y1	Fresh/recirculated air flap, small lift
y2	Fresh/recirculated air flap, large lift
y3	Footwell flaps
y4	Center nozzle flap
y5	Defroster nozzle flaps, large lift
y6	Diverter air flap
y7	Defroster nozzle flaps, small lift
Y19	Mono valve, automatic climate control
a	To the washer nozzle heating, left
b	To the X6 connector, terminal 58d, 2-pole

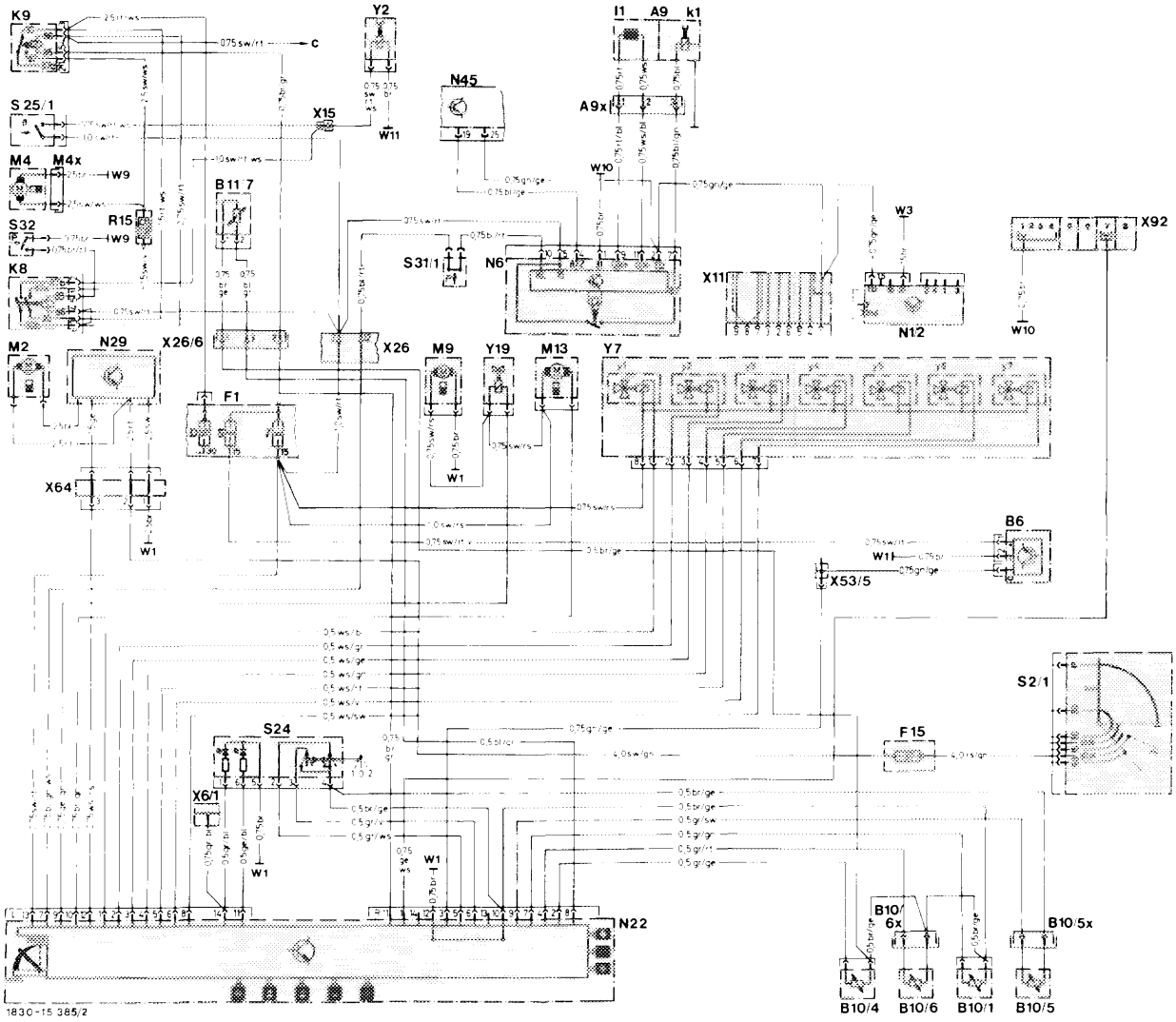

Models 124.020/080 RÜF/CAT as of August 1987

A9	Refrigerant compressor
k1	Electromagnetic coupling
I1	Rpm sensor
A9x	Connector, refrigerant compressor
B6	Hall-sensor, speed
B10/1	Temperature sensor, heat exchanger
B10/4	Temperature sensor, interior air
B10/5	Temperature sensor, outside air
B10/5x	Connector, temperature sensor outside air
B10/6	Temperature sensor, evaporator
B10/6x	Connector, temperature sensor evaporator
B11/7	Temperature sensor, coolant (blue)
F1	Fuse and relay box
	Fuse 5: 8 A
	Fuse 7: 8 A
	Fuse D: 16 A
F15	Auxiliary fuse holder, blower motor
K8	Double contact relay, auxiliary fan, magnetic coupling, engine fan
K9	Relay, auxiliary fan
M2	Blower motor
M4	Auxiliary fan
M9	Ventilation blower, temperature sensor interior air
N1/2	Switching unit, transistorized ignition (EZL)
N6	Control unit, compressor cutout
N22	Automatic climate control unit
N29	Electronic blower regulator
N45	Control unit, electronic carburetor
R15	Preresistor, auxiliary fan
S2/1	Ignition starter switch
S24	Switch, fresh/recirculated air
S25/1	Temperature switch 100 °C
S31/1	Pressure switch, refrigerant compressor, OFF 2.0/30 bar/ON 2.6/22 bar
S32	Pressure switch, auxiliary fan OFF 15 bar/ON 20 bar
W3	Ground, wheelhouse front left (ignition coil)
W9	Ground, front left (near headlamp unit)
W10	Ground, battery
W11	Ground, engine (electrical cables screwed on)

Ground without designation, component directly on engine or body

X6/1	Connector, terminal 58D
X11	Diagnostic socket/connector terminal TD
X15	Connector, engine fan/temperature switch 100 °C
X26	Connector, engine cable harness, 12-pole
M13	Circulating pump
M26/6	Connector, engine cable harness, Tempmatic/automatic climate control, 3-pole
X53/5	Multiple connector/Hall-sensor
X64	Connector, blower regulator/interior cable harness
X92	Diagnostic test coupling, 8-pole (flash code)
Y2	Electromagnetic coupling, engine fan
Y7	Switchover valve block, 7-fold
y1	Fresh/recirculated air flap, small lift
y2	Fresh/recirculated air flap, large lift
y3	Footwell flaps
y4	Center nozzle flap
y5	Defroster nozzle flaps, large lift
y6	Diverter air flap
y7	Defroster nozzle flaps, small lift
Y19	Mono valve
c	To the washer nozzle heating left

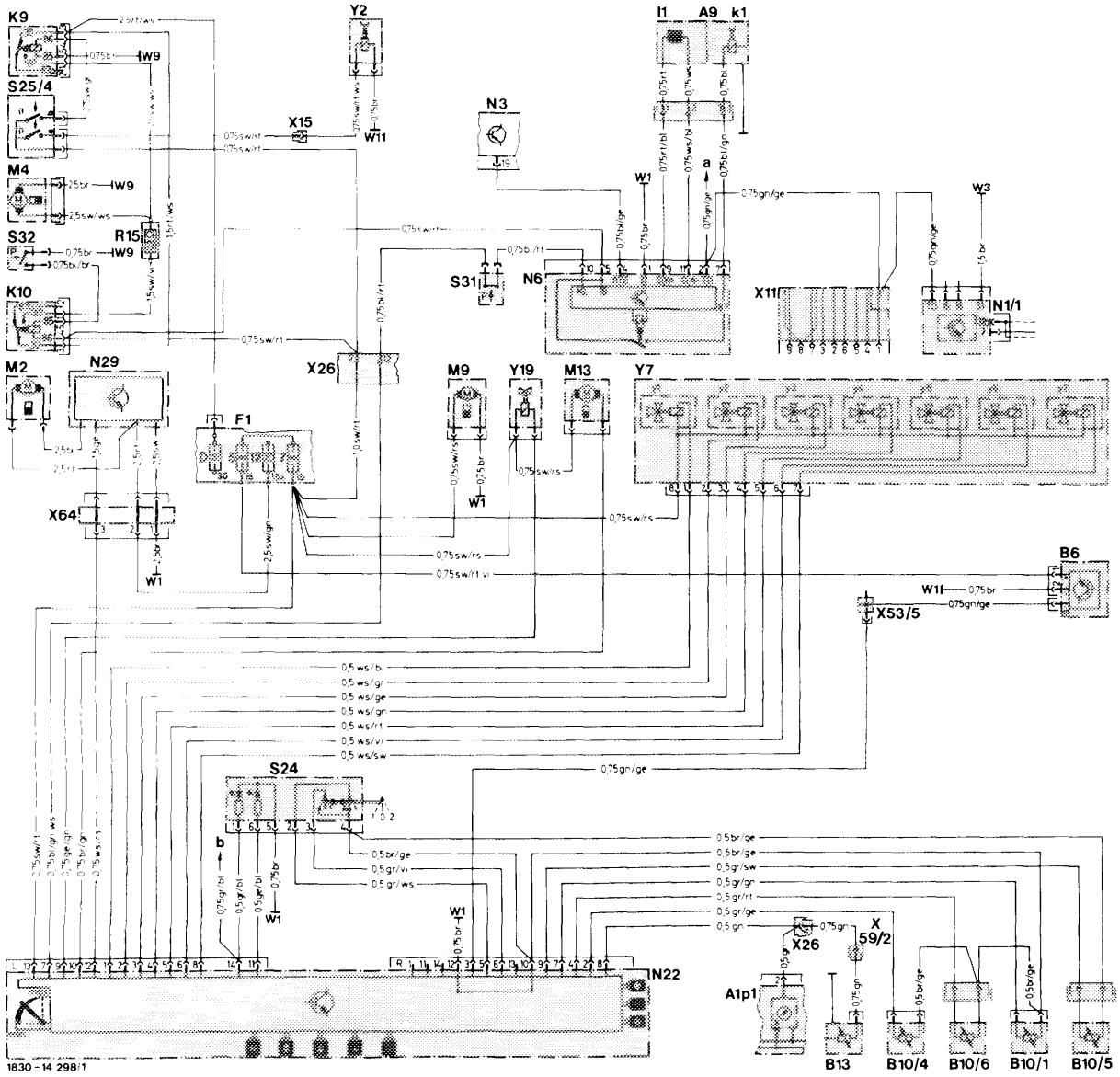

Model 124.023 standard version up to July 1985

A1	p1	Temperature indicator, coolant
A9		Refrigerant compressor
	k1	Electromagnetic coupling
	l1	Rpm sensor
B6		Hall-sensor, speed
B10/1		Temperature sensor, heat exchanger
B10/4		Temperature sensor, interior air
B10/5		Temperature sensor, outside air
B10/6		Temperature sensor, evaporator
B13		Temperature sensor, coolant indicator
F1		Fuse and relay box
		Fuse 5, terminal 15
		Fuse 7, terminal 15
		Fuse 12, terminal 15X
		Fuse D, terminal 30
K9		Relay, auxiliary fan
K10		Relay, auxiliary fan, preresistor
M2		Blower motor
M4		Auxiliary fan
M9		Ventilation blower, temperature sensor interior air
M13		Circulating pump
N1/1		Switching unit, transistorized ignition (EZL)
N3		Control unit CIS-E
N6		Control unit, compressor cutout
N22		Automatic climate control unit
N29		Electronic blower regulator
R15		Preresistor, auxiliary fan
S24		Switch, fresh/recirculated air
S25/4		Temperature switch 100/110 °C
S31/1		Pressure switch, refrigerant compressor, OFF 2.0 bar/ON 2.6 bar
S32		Pressure switch, auxiliary fan, OFF 15.0 bar/ON 20.0 bar
W1		Main ground (behind instrument cluster)
W3		Ground, wheelhouse front left (ignition coil)
W9		Ground, front left (near headlamp unit)
W11		Ground, engine (electrical cable screwed on)

Ground connection without designation, component directly on engine or body

X11	Diagnostic socket/connector terminal TD
X15	Connector, engine fan/temperature switch 100 °C
X26	Connector, cable harness, 12-pole
X53/5	Multiple connector/Hall-sensor 6-pole
X59/2	Connector, temperature sensor coolant
X64	Connector, blower regulator/interior cable harness
Y2	Electromagnetic coupling, engine fan
Y7	Switchover valve block, 7-fold
y1	Fresh/recirculated air flap, small lift
y2	Fresh/recirculated air flap, large lift
y3	Footwell flaps
y4	Center nozzle flap
y5	Defroster nozzle flaps, large lift
y6	Diverter air flap
y7	Defroster nozzle flaps, small lift
Y19	Mono valve, automatic climate control
a	To the coupling, relay, fuel pump, jack 10
b	To the X6 connector, terminal 58d, 2-pole

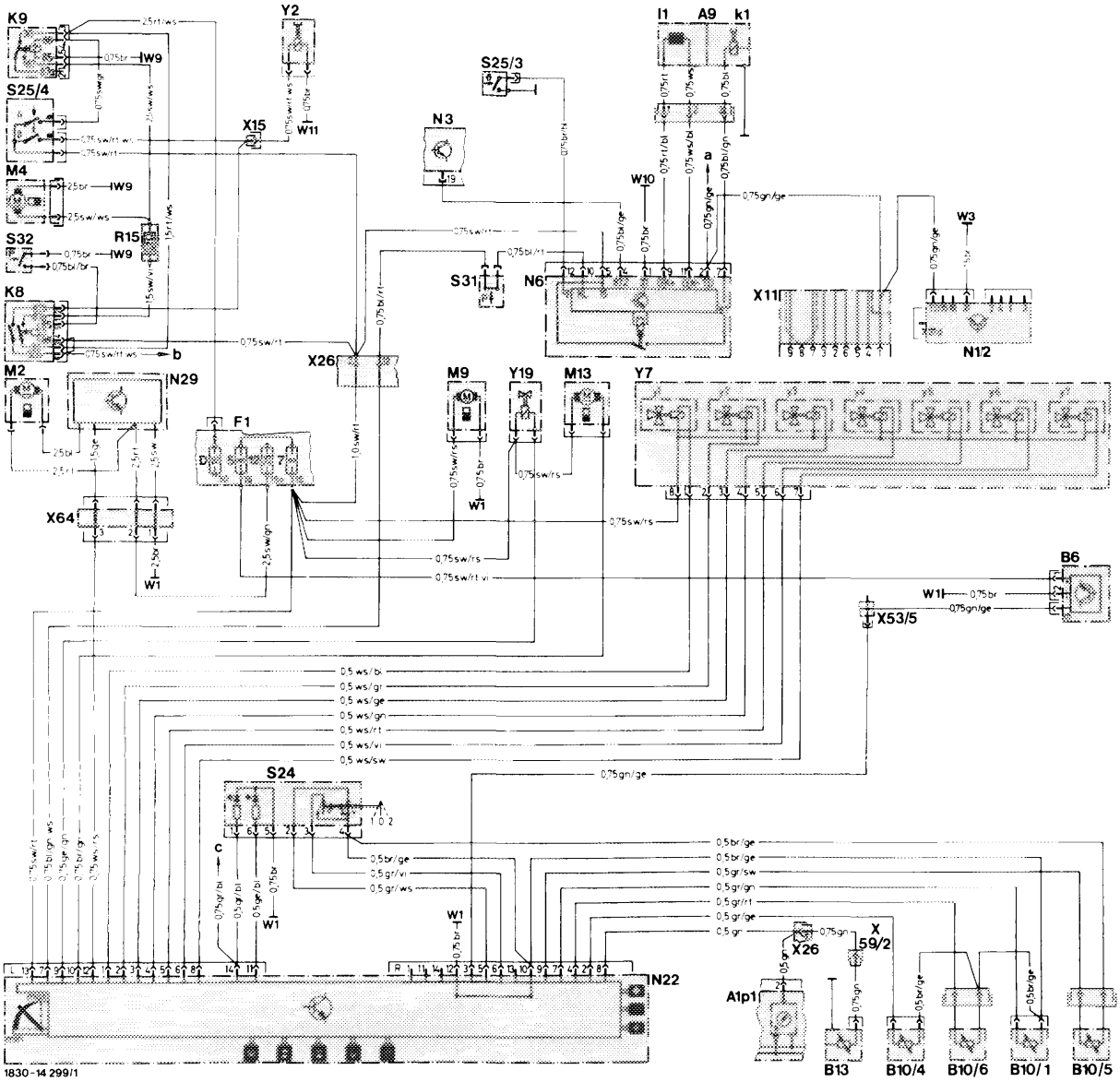

Model 124.023/043/083 RÜF/CAT as of August 1985 to July 1987

A1	p1	Temperature indicator, coolant
A9		Refrigerant compressor
	k1	Electromagnetic coupling
	I1	Rpm sensor
B6		Hall-sensor, speed
B10/1		Temperature sensor, heat exchanger
B10/4		Temperature sensor, interior air
B10/5		Temperature sensor, outside air
B10/6		Temperature sensor, evaporator
B13		Temperature sensor, coolant indicator
F1		Fuse and relay box
		Fuse 5, terminal 15
		Fuse 7, terminal 15
		Fuse 12, terminal 15X
		Fuse D, terminal 30
K8		Double contact relay, auxiliary fan, magnetic coupling, engine fan
K9		Relay, auxiliary fan
K10		Relay, auxiliary fan, preresistor
M2		Blower motor
M4		Auxiliary fan
M9		Ventilation blower, temperature sensor interior air
M13		Circulating pump
N1/1		Switching unit, transistorized ignition (EZL)
N3		Control unit CIS-E
N6		Control unit, compressor cutout
N22		Automatic climate control unit
N29		Electronic blower regulator
R15		Preresistor, auxiliary fan
S24		Switch, fresh/recirculated air
S25/3		Temperature switch 110 °C
S25/4		Temperature switch 100/110 °C
S31/1		Pressure switch, refrigerant compressor, OFF 2.0 bar/ON 2.6 bar
S32		Pressure switch, auxiliary fan, OFF 15.0 bar/ON 20.0 bar
W1		Main ground (behind instrument cluster)
W3		Ground, wheelhouse front left (ignition coil)
W9		Ground, front left (near headlamp unit)
W11		Ground, engine (electrical cables screwed on)

Ground connection without designation, component directly on engine or body

X11	Diagnostic socket/connector terminal TD
X15	Connector, engine fan/temperature switch 100 °C
X26	Connector, cable harness, 12-pole
X53/5	Multiple connector/Hall-sensor 6-pole
X59/2	Connector, temperature sensor coolant
X64	Connector, blower regulator/interior cable harness
Y2	Electromagnetic coupling, engine fan
Y7	Switchover valve block, 7-fold
y1	Fresh/recirculated air flap, small lift
y2	Fresh/recirculated air flap, large lift
y3	Footwell flaps
y4	Center nozzle flap
y5	Defroster nozzle flaps, large lift
y6	Diverter air flap
y7	Defroster nozzle flaps, small lift
Y19	Mono valve, automatic climate control
a	To the coupling, relay, fuel pump, jack 10
b	To the washer nozzle heating left
c	To the X6 connector, terminal 58d, 2-pole

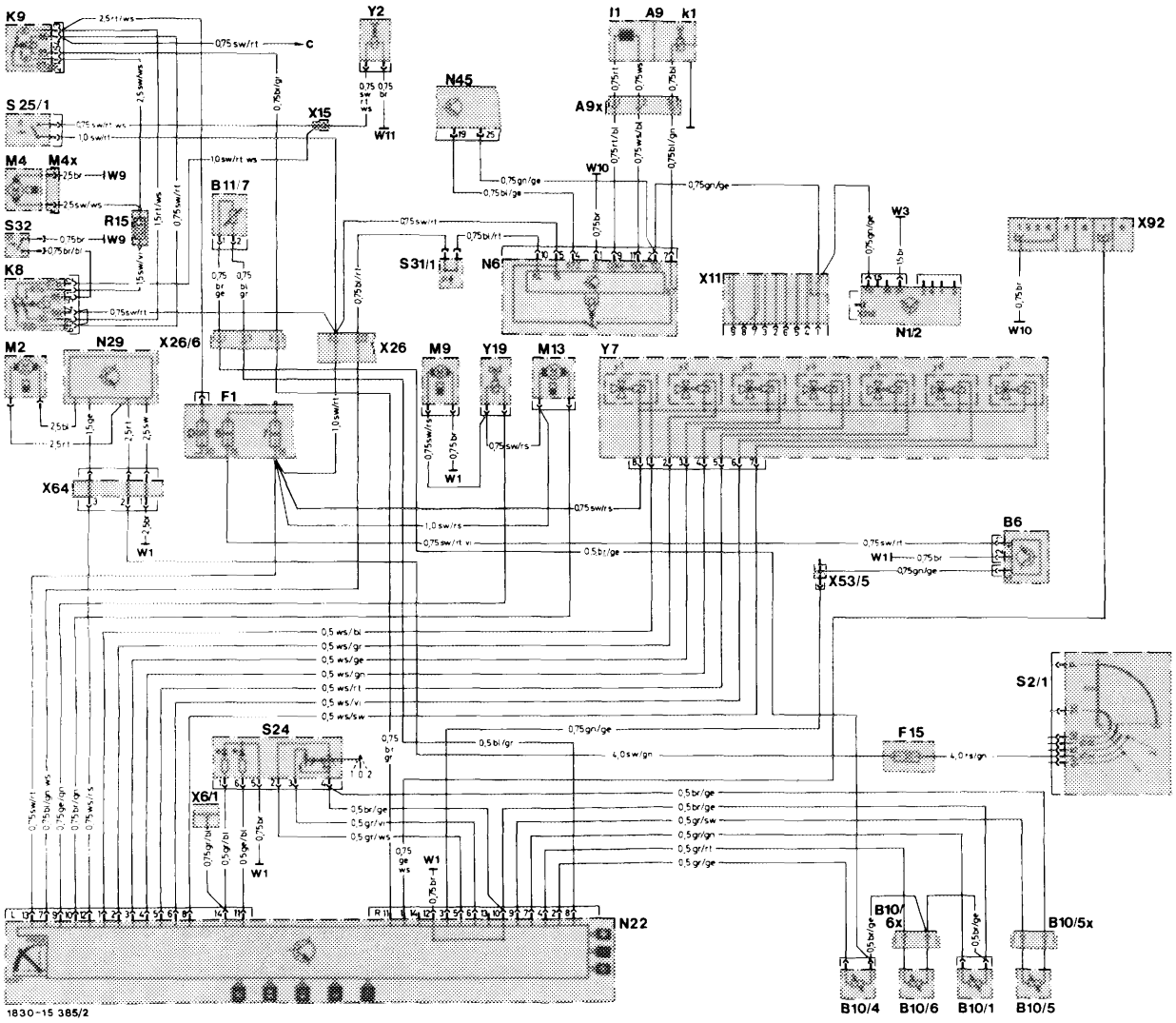

Models 124.023/043/083 RÜF/CAT as of August 1987

A9		Refrigerant compressor
	k1	Electromagnetic coupling
	I1	Rpm sensor
A9x		Connector, refrigerant compressor
B6		Hall-sensor, speed
B10/1		Temperature sensor, heat exchanger
B10/4		Temperature sensor, interior air
B10/5		Temperature sensor, outside air
B10/5x		Connector, temperature sensor outside air
B10/6		Temperature sensor, evaporator
B10/6x		Connector, temperature sensor evaporator
B11/7		Temperature sensor, coolant (blue)
F1		Fuse and relay box
		Fuse 5: 8 A
		Fuse 7: 8 A
		Fuse D: 16 A
F15		Auxiliary fuse holder, blower motor
K8		Double contact relay, auxiliary fan, magnetic coupling, engine fan
K9		Relay, auxiliary fan
M2		Blower motor
M4		Auxiliary fan
M9		Ventilation blower, temperature sensor interior air
N1/2		Switching unit, transistorized ignition (EZL)
N3		Control unit CIS-E
N6		Control unit, compressor cutout
N22		Automatic climate control unit
N29		Electronic blower regulator
R15		Preresistor, auxiliary fan
S2/1		Ignition starter switch
S24		Switch, fresh/recirculated air
S25/1		Temperature switch 100 °C
S31/1		Pressure switch, refrigerant compressor, OFF 2.0/30 bar/ON 2.6/22 bar
S32		Pressure switch, auxiliary fan, OFF 15 bar/ON 20 bar
W3		Ground, wheelhouse front left (ignition coil)
W9		Ground, front left (near headlamp unit)
W10		Ground, battery
W11		Ground, engine (electrical cables screwed on)

Ground without designation, component directly on engine or body

X6/1	Connector, terminal 58D
X11	Diagnostic socket/connector terminal TD
X15	Connector, engine fan/temperature switch 100 °C
X26	Connector, engine cable harness, 12-pole
M13	Circulating pump
X26/6	Connector, engine cable harness, Tempmatic/automatic climate control, 3-pole
X53/5	Multiple connector/Hall-sensor
X64	Connector, blower regulator/interior cable harness
X92	Diagnostic test coupling, 8-pole (flash code)

Y2		Electromagnetic coupling, engine fan
Y7		Switchover valve block, 7-fold
	y1	Fresh/recirculated air flap, small lift
	y2	Fresh/recirculated air flap, large lift
	y3	Footwell flaps
	y4	Center nozzle flap
	y5	Defroster nozzle flaps, large lift
	y6	Diverter air flap
	y7	Defroster nozzle flaps, small lift
Y19		Mono valve
a		To the relay, fuel pump, jack 10
c		To the washer nozzle heating left

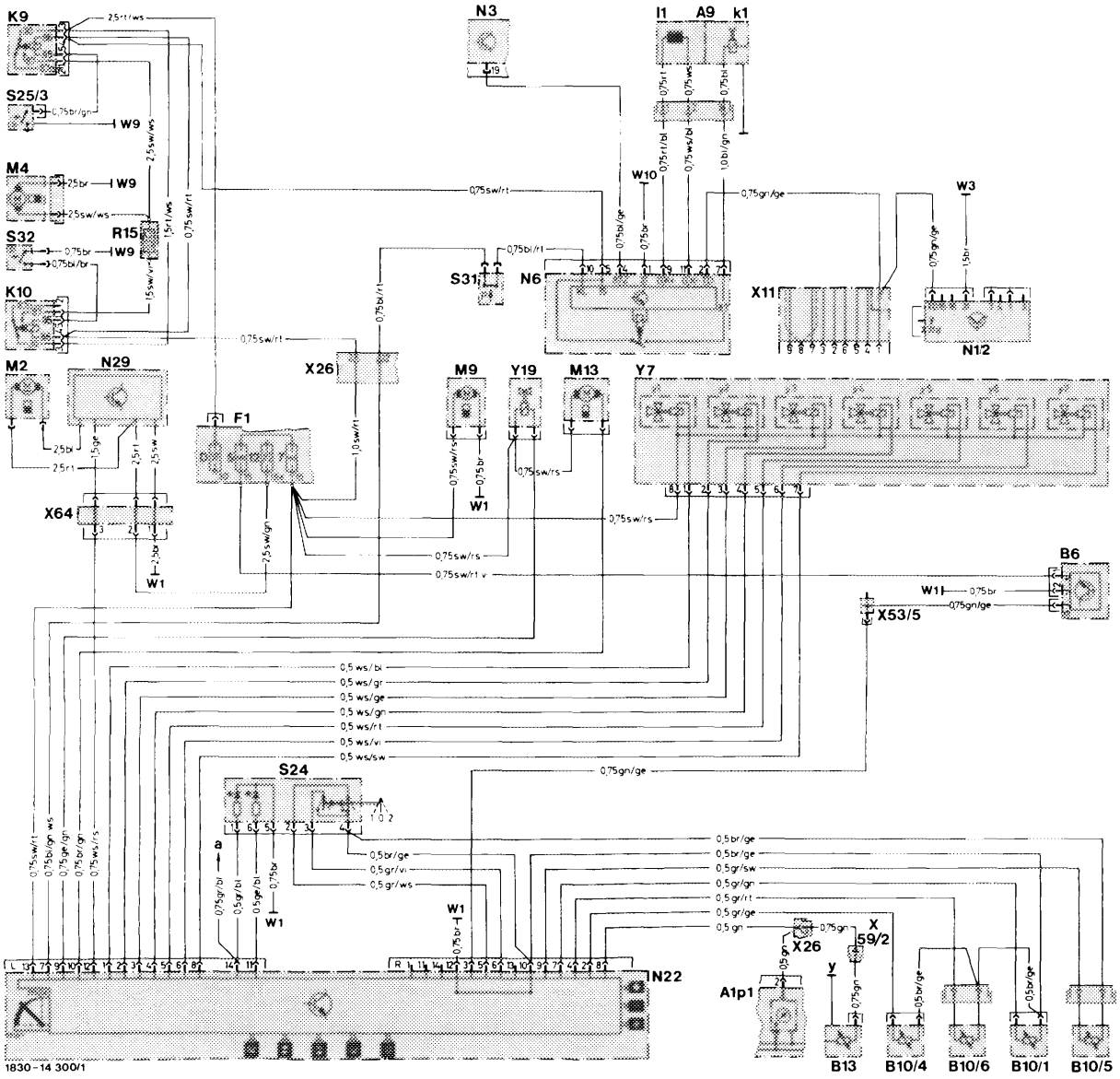

Model 124.030 standard version up to July 1985

A1	p1	Temperature indicator coolant
A9		Refrigerant compressor
	k1	Electromagnetic coupling
	I1	Rpm sensor
B6		Hall-sensor, speed
B10/1		Temperature sensor, heat exchanger
B10/4		Temperature sensor, interior air
B10/5		Temperature sensor, outside air
B10/6		Temperature sensor, evaporator
B13		Temperature sensor, coolant indicator
F1		Fuse and relay box
		Fuse 5, terminal 15
		Fuse 7, terminal 15
		Fuse 12, terminal 15X
		Fuse D, terminal 30
K9		Relay, auxiliary fan
K10		Relay, auxiliary fan preresistor
M2		Blower motor
M4		Auxiliary fan
M9		Ventilation blower, temperature sensor interior air
M13		Circulating pump
N1/2		Switching unit, transistorized ignition (EZL)
N3		Control unit, CIS-E
N6		Control unit, compressor cutout
N22		Automatic climate control unit
N29		Electronic blower regulator
R15		Preresistor, auxiliary fan
S24		Switch, fresh/recirculated air
S25/3		Temperature switch 110 °C
S31/1		Pressure switch, refrigerant compressor, OFF 2.0 bar/ON 2.6 bar
S32		Pressure switch, auxiliary fan, OFF 15.0 bar/ON 20.0 bar
W1		Main ground (behind instrument cluster)
W3		Ground, wheelhouse front left (ignition coil)
W9		Ground, front left (near headlamp unit)
W10		Ground, battery

Ground connection without designation, component directly on engine or body

X11	Diagnostic socket/connector, terminal TD
X26	Connector, engine cable harness, 12-pole
X53/5	Multiple connector/Hall-sensor, 6-pole
X59/2	Connector, temperature sensor coolant
X64	Connector, blower regulator/interior cable harness

Y7		Switchover valve block, 7-fold
	y1	Fresh/recirculated air flap, small lift
	y2	Fresh/recirculated air flap, large lift
	y3	Footwell flaps
	y4	Center nozzle flap
	y5	Defroster nozzle flaps, large lift
	y6	Diverter air flap
	y7	Defroster nozzle flaps, small lift
Y19		Mono valve, automatic climate control
a		To X6 connector, terminal 58d, 2-pole

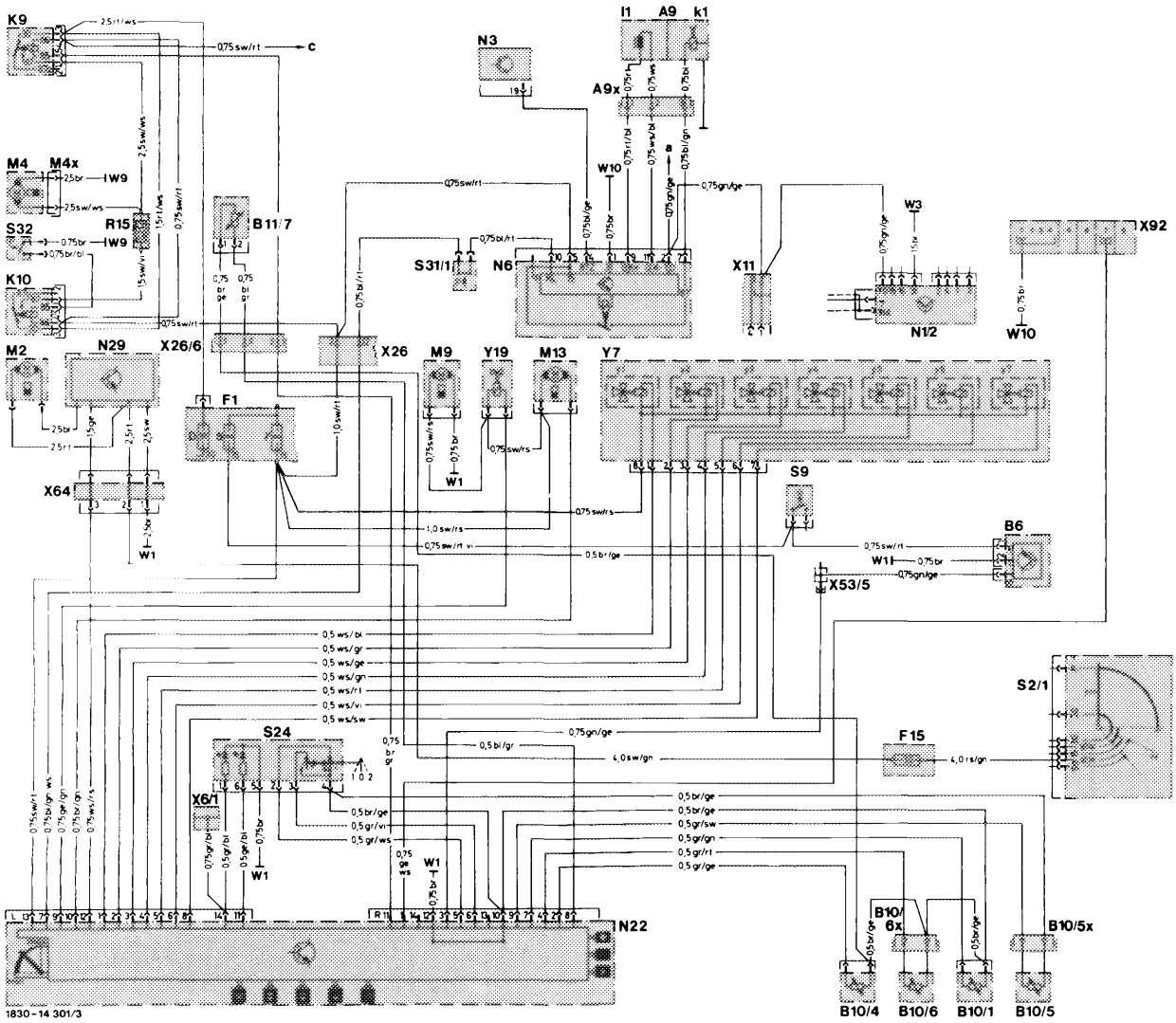

Model 124.026/030/050/090/226/230/290 RÜF/CAT as of August 1985 up to July 1987

A1	p1	Temperature indicator coolant
A9		Refrigerant compressor
	k1	Electromagnetic coupling
	I1	Rpm sensor
B6		Hall-sensor, speed
B10/1		Temperature sensor, heat exchanger
B10/4		Temperature sensor, interior air
B10/5		Temperature sensor, outside air
B10/6		Temperature sensor, evaporator
B13		Temperature sensor, coolant indicator
F1		Fuse and relay box
		Fuse 5, terminal 15
		Fuse 7, terminal 15
		Fuse 12, terminal 15X
		Fuse D, terminal 30
K9		Relay, auxiliary fan
K10		Relay, auxiliary fan preresistor
M2		Blower motor
M4		Auxiliary fan
M9		Ventilation blower, temperature sensor interior air
M13		Circulating pump
N1/2		Switching unit, transistorized ignition (EZL)
N3		Control unit, CIS-E
N6		Control unit, compressor cutout
N22		Automatic climate control unit
N29		Electronic blower regulator
R15		Preresistor, auxiliary fan
S24		Switch, fresh/recirculated air
S25/5		Temperature switch 105/115 °C
	a	105 °C for auxiliary fan
	b	115 °C for compressor/emergency cutout
S31/1		Pressure switch, refrigerant compressor, OFF 2.0 bar/ON 2.6 bar
S32		Pressure switch, auxiliary fan, OFF 15.0 bar/ON 20.0 bar
W1		Main ground (behind instrument cluster)
W3		Ground, wheelhouse front left (ignition coil)
W9		Ground, front left (near headlamp unit)
W10		Ground, battery

Ground connection without designation, component directly on engine or body

X11	Diagnostic socket/connector, terminal TD
X26	Connector, engine cable harness, 12-pole
X53/5	Multiple connector/Hall-sensor, 6-pole
X59/2	Connector, temperature sensor coolant
X64	Connector, blower regulator/interior cable harness

Y7		Switchover valve block, 7-fold
	y1	Fresh/recirculated air flap, small lift
	y2	Fresh/recirculated air flap, large lift
	y3	Footwell flaps
	y4	Center nozzle flap
	y5	Defroster nozzle flaps, large lift
	y6	Diverter air flap
	y7	Defroster nozzle flaps, small lift
Y19		Mono valve, automatic climate control
a		To the coupling, relay, fuel pump, jack 10
b		To the washer nozzle heating, left
c		To X6 connector, terminal 58d, 2-pole

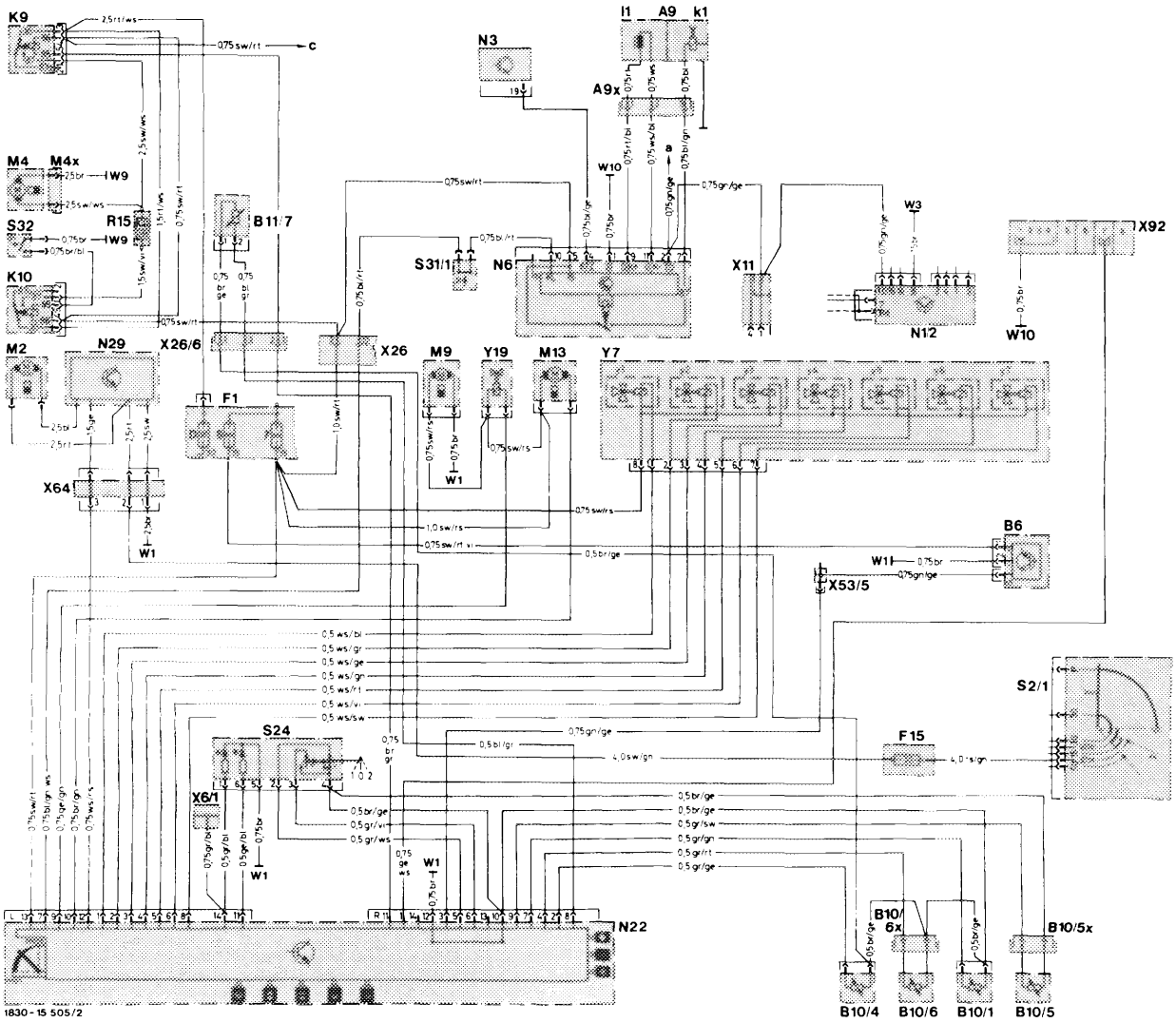

Models 124.026/030/050/090/226/230/290 as of August 1987

A9	Refrigerant compressor
k1	Electromagnetic coupling
I1	Rpm sensor
A9x	Connector, refrigerant compressor
B6	Hall-sensor, speed
B10/1	Temperature sensor, heat exchanger
B10/4	Temperature sensor, interior air
B10/5	Temperature sensor, outside air
B10/5x	Connector, temperature sensor outside air
B10/6	Temperature sensor, evaporator
B10/6x	Connector, temperature sensor evaporator
B11/7	Temperature sensor, coolant (blue)
F1	Fuse and relay box
	Fuse 5: 8 A
	Fuse 7: 8 A
	Fuse D: 16 A
F15	Auxiliary fuse holder, blower motor
K9	Relay, auxiliary fan
K10	Relay, auxiliary fan preresistor
M2	Blower motor
M4	Auxiliary fan
M9	Ventilation blower, temperature sensor interior air
M13	Circulating pump
N1/2	Switching unit, transistorized ignition (EZL)
N3	Control unit CIS-E
N6	Control unit, compressor cutout
N22	Automatic climate control unit
N29	Electronic blower regulator
R15	Preresistor, auxiliary fan
S2/1	Ignition starter switch
S24	Switch, fresh/recirculated air
S31/1	Pressure switch, refrigerant compressor, OFF 2.0/30 bar ON 2.6/22 bar
S32	Pressure switch, auxiliary fan OFF 15 bar/ON 20 bar
W1	Main ground (behind instrument cluster)
W3	Ground, wheelhouse front left (ignition coil)
W9	Ground, front left (near headlamp unit)
W10	Ground, battery

Ground without designation, component directly on engine or body

X6/1	Connector, terminal 58D
X11	Diagnostic socket/connector, terminal TD
X26	Connector, engine cable harness, 12-pole
X26/6	Connector, engine cable harness, Tempmatic/automatic climate control, 3-pole
X53/5	Multiple connector/Hall-sensor
X64	Connector, blower regulator/interior cable harness
X92	Diagnostic test coupling, 8-pole (flash code)
Y2	Electromagnetic coupling, engine fan
Y7	Switchover valve block, 7-fold
y1	Fresh/recirculated air flap, small lift
y2	Fresh/recirculated air flap, large lift
y3	Footwell flaps
y4	Center nozzle flap
y5	Defroster nozzle flaps, large lift
y6	Diverter air flap
y7	Defroster nozzle flaps, small lift
Y19	Mono valve
a	To the relay, fuel pump, jack 10
c	To the washer nozzle heating, left

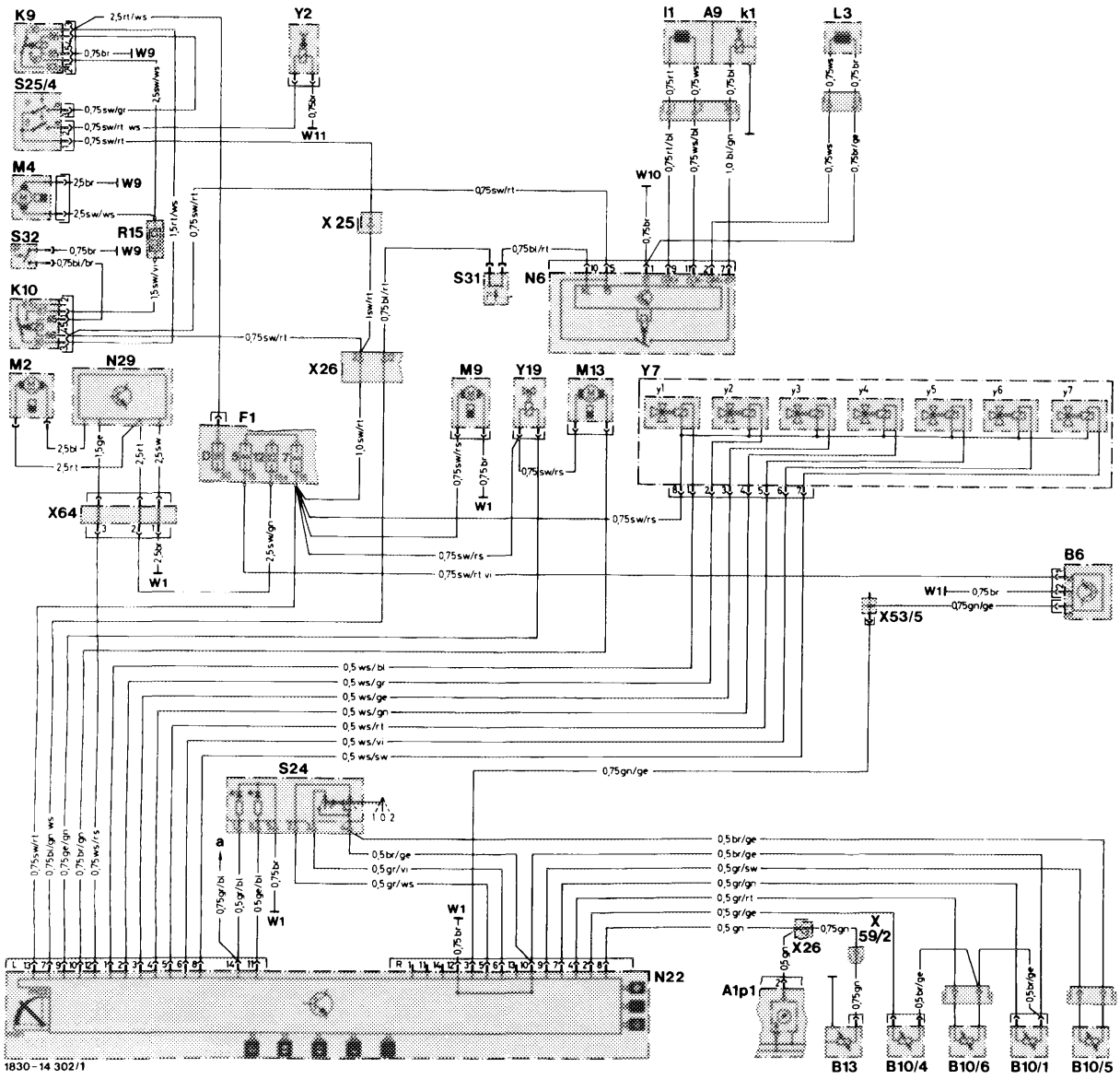

Model 124.120 with manual transmission up to July 1985

A1	p1	Temperature indicator coolant
A9		Refrigerant compressor
	k1	Electromagnetic coupling
	I1	Rpm sensor
B6		Hall-sensor, speed
B10/1		Temperature sensor, heat exchanger
B10/4		Temperature sensor, interior air
B10/5		Temperature sensor, outside air
B10/6		Temperature sensor, evaporator
B13		Temperature sensor, coolant indicator
F1		Fuse and relay box
		Fuse 5, terminal 15
		Fuse 7, terminal 15
		Fuse 12, terminal 15X
		Fuse D, terminal 30
K9		Relay, auxiliary fan
K10		Relay, auxiliary fan preresistor
L3		Rpm sensor, starter ring gear
M2		Blower motor
M4		Auxiliary fan
M9		Ventilation blower, temperature sensor interior air
M13		Circulating pump
N6		Control unit, compressor cutout
N22		Automatic climate control unit
N29		Electronic blower regulator
R15		Preresistor, auxiliary fan
S24		Switch, fresh/recirculated air
S25/4		Temperature switch 100/110 °C
S31/1		Pressure switch, refrigerant compressor, OFF 2.0 bar/ON 2.6 bar
S32		Pressure switch, auxiliary fan, OFF 15.0 bar/ON 20.0 bar
W1		Main ground (behind instrument cluster)
W9		Ground, front left (near headlamp unit)
W10		Ground, battery
W11		Ground, engine (electrical cable screwed on)

Ground connection without designation, component directly on engine or body

X25	Connector, preheating cable harness
X26	Connector, engine cable harness, 12-pole
X53/5	Multiple connector/Hall-sensor, 6-pole
X59/2	Connector, temperature sensor coolant
X64	Connector, blower regulator/interior cable harness

Y2		Electromagnetic coupling, engine fan
Y7		Switchover valve block, 7-fold
	y1	Fresh/recirculated air flap, small lift
	y2	Fresh/recirculated air flap, large lift
	y3	Footwell flaps
	y4	Center nozzle flap
	y5	Defroster nozzle flaps, large lift
	y6	Diverter air flap
	y7	Defroster nozzle flaps, small lift
Y19		Mono valve, automatic climate control
a		To X6 connector, terminal 58d, 2-pole

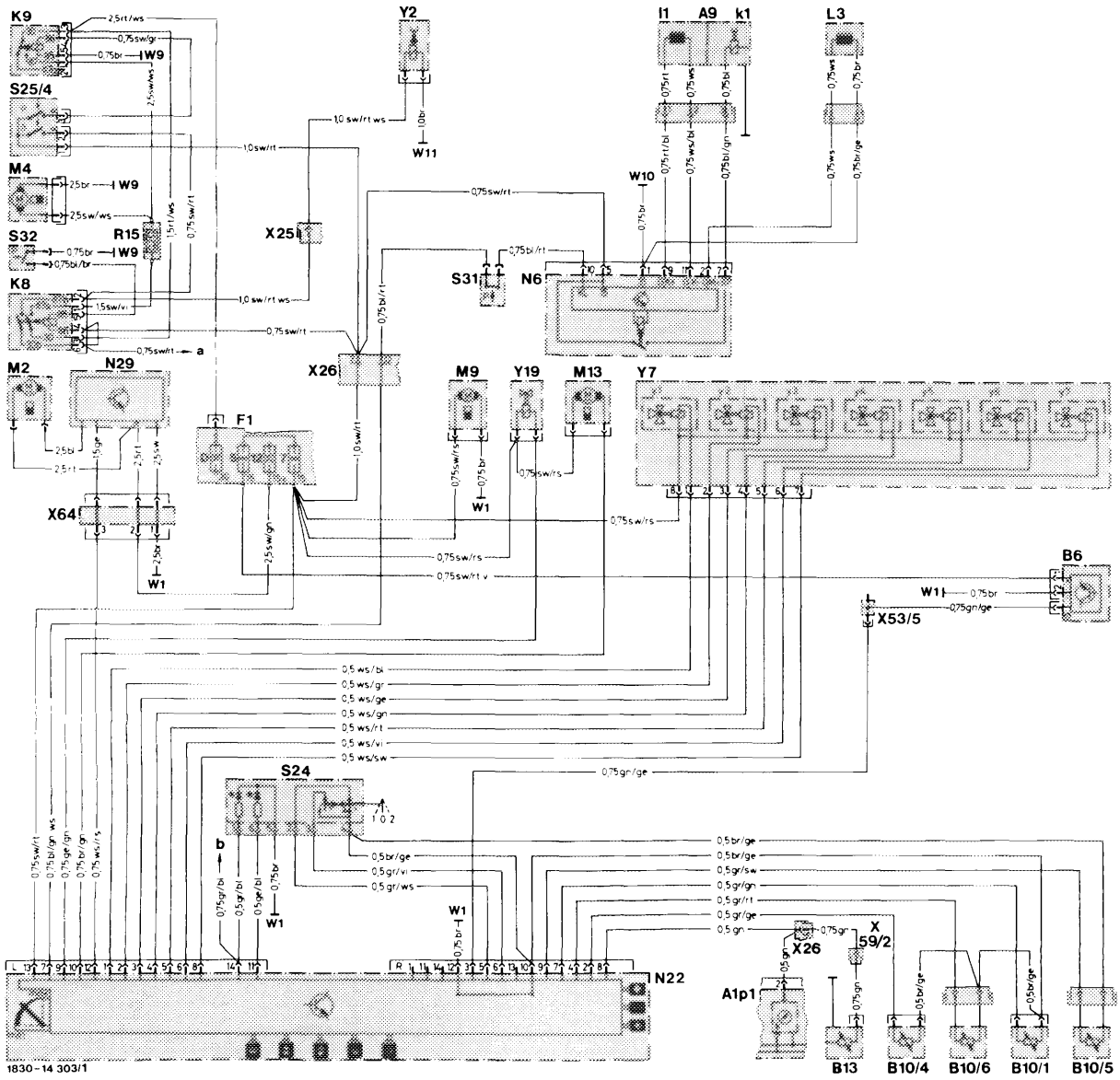

Model 124.120/180 with manual transmission as of August 1985 up to July 1987

A1	p1	Temperature indicator coolant
A9		Refrigerant compressor
	k1	Electromagnetic coupling
	I1	Rpm sensor
B6		Hall-sensor, speed
B10/1		Temperature sensor, heat exchanger
B10/4		Temperature sensor, interior air
B10/5		Temperature sensor, outside air
B10/6		Temperature sensor, evaporator
B13		Temperature sensor, coolant indicator
F1		Fuse and relay box
		Fuse 5, terminal 15
		Fuse 7, terminal 15
		Fuse 12, terminal 15X
		Fuse D, terminal 30
K8		Double contact relay, auxiliary fan, magnetic coupling, engine fan
K9		Relay, auxiliary fan
L3		Rpm sensor, starter ring gear
M2		Blower motor
M4		Auxiliary fan
M9		Ventilation blower, temperature sensor interior air
M13		Circulating pump
N6		Control unit, compressor cutout
N22		Automatic climate control unit
N29		Electronic blower regulator
R15		Preresistor, auxiliary fan
S24		Switch, fresh/recirculated air
S25/4		Temperature switch 100/110 °C
S31/1		Pressure switch, refrigerant compressor, OFF 2.0 bar/ON 2.6 bar
S32		Pressure switch, auxiliary fan, OFF 15.0 bar/ON 20.0 bar
W1		Main ground (behind instrument cluster)
W9		Ground, front left (near headlamp unit)
W10		Ground, battery
W11		Ground, engine (electrical cable screwed on)

Ground connection without designation, component directly on engine or body

X25	Connector, preheating cable harness
X26	Connector, engine cable harness, 12-pole
X53/5	Multiple connector/Hall-sensor, 6-pole
X59/2	Connector, temperature sensor coolant
X64	Connector, blower regulator/interior cable harness
Y2	Electromagnetic coupling, engine fan

Y7	Switchover valve block, 7-fold
y1	Fresh/recirculated air flap, small lift
y2	Fresh/recirculated air flap, large lift
y3	Footwell flaps
y4	Center nozzle flap
y5	Defroster nozzle flaps, large lift
y6	Diverter air flap
y7	Defroster nozzle flaps, small lift
Y19	Mono valve, automatic climate control
a	To the washer nozzle heating, left
b	To X6 connector, terminal 58d, 2-pole

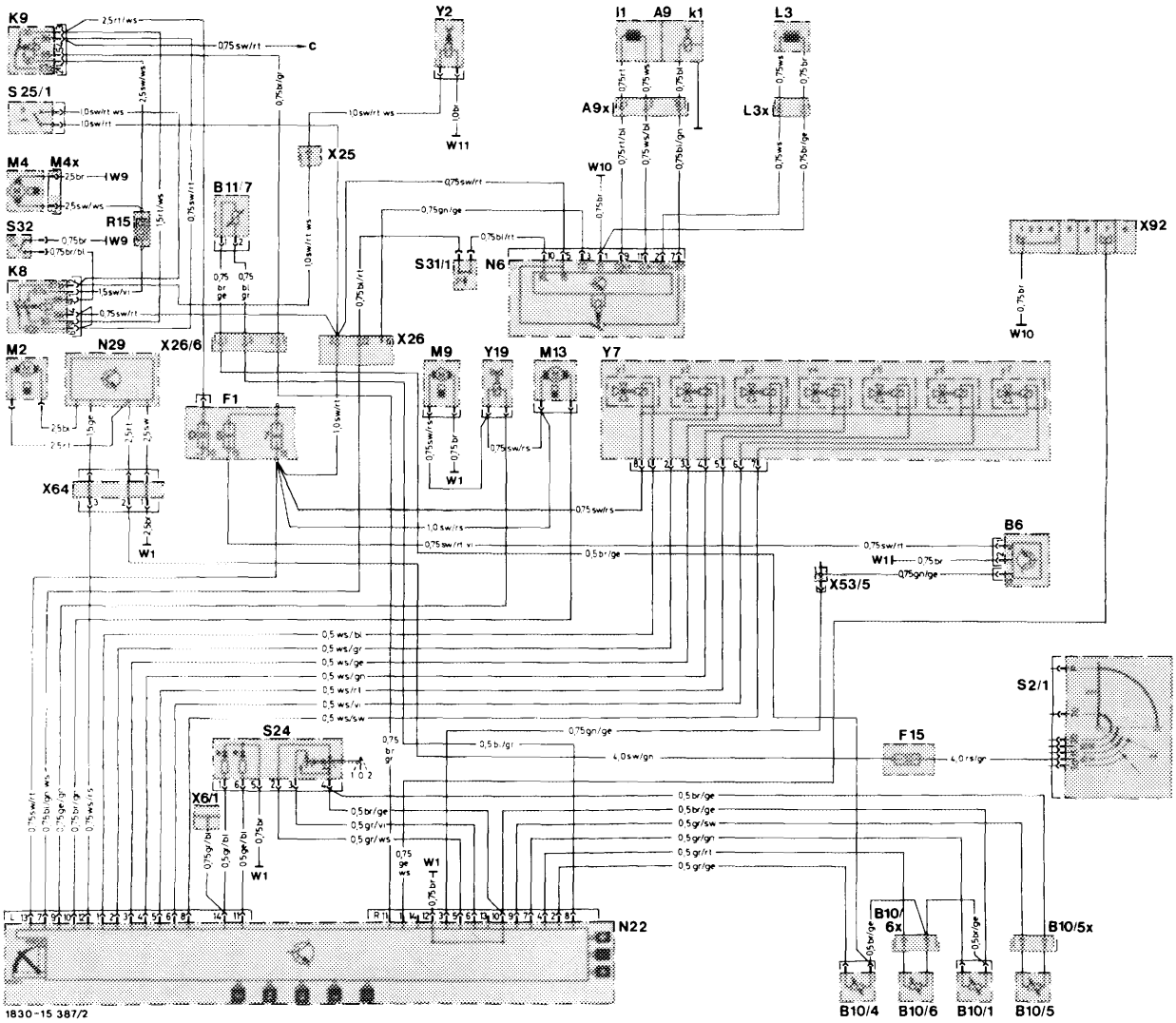

Models 124.120/180 with manual transmission as of August 1987

A9		Refrigerant compressor
	k1	Electromagnetic coupling
	I1	Rpm sensor
A9x		Connector, refrigerant compressor
B6		Hall-sensor, speed
B10/1		Temperature sensor, heat exchanger
B10/4		Temperature sensor, interior air
B10/5		Temperature sensor, outside air
B10/5x		Connector, temperature sensor outside air
B10/6		Temperature sensor, evaporator
B10/6x		Connector, temperature sensor evaporator
B11/7		Temperature sensor, coolant (blue)
F1		Fuse and relay box Fuse 5: 8 A Fuse 7: 8 A Fuse D: 16 A
F15		Auxiliary fuse holder, blower motor
K8		Double contact relay, auxiliary fan, magnetic coupling, engine fan
K9		Relay, auxiliary fan
L3		Rpm sensor, starter ring gear
L3x		Connector, rpm sensor, starter ring gear
M2		Blower motor
M4		Auxiliary fan
M9		Ventilation blower, temperature sensor interior air
M13		Circulating pump
N6		Control unit, compressor cutout
N22		Automatic climate control unit
N29		Electronic blower regulator
R15		Preresistor, auxiliary fan
S2/2		Glow-starter switch
S24		Switch, fresh/recirculated air
S25/1		Temperature switch 100 °C
S31/1		Pressure switch, refrigerant compressor, OFF 2.0/30 bar ON 2.6/22 bar
S32		Pressure switch, auxiliary fan OFF 15 bar/ON 20 bar
W1		Main ground (behind instrument cluster)
W9		Ground, front left (near headlamp unit)
W10		Ground, battery

Ground without designation, component directly on engine or body

X6/1	Connector, terminal 58D
X25	Connector, preheating cable harness
X26	Connector, engine cable harness, 12-pole
X26/6	Connector, engine cable harness, Tempmatic/automatic climate control, 3-pole
X53/5	Multiple connector/Hall-sensor
X64	Connector, blower regulator/interior cable harness
X92	Diagnostic test coupling, 8-pole (flash code)
Y2	Electromagnetic coupling, engine fan
Y7	Switchover valve block, 7-fold
y1	Fresh/recirculated air flap, small lift
y2	Fresh/recirculated air flap, large lift
y3	Footwell flaps
y4	Center nozzle flap
y5	Defroster nozzle flaps, large lift
y6	Diverter air flap
y7	Defroster nozzle flaps, small lift
Y19	Mono valve
c	To the washer nozzle heating, left

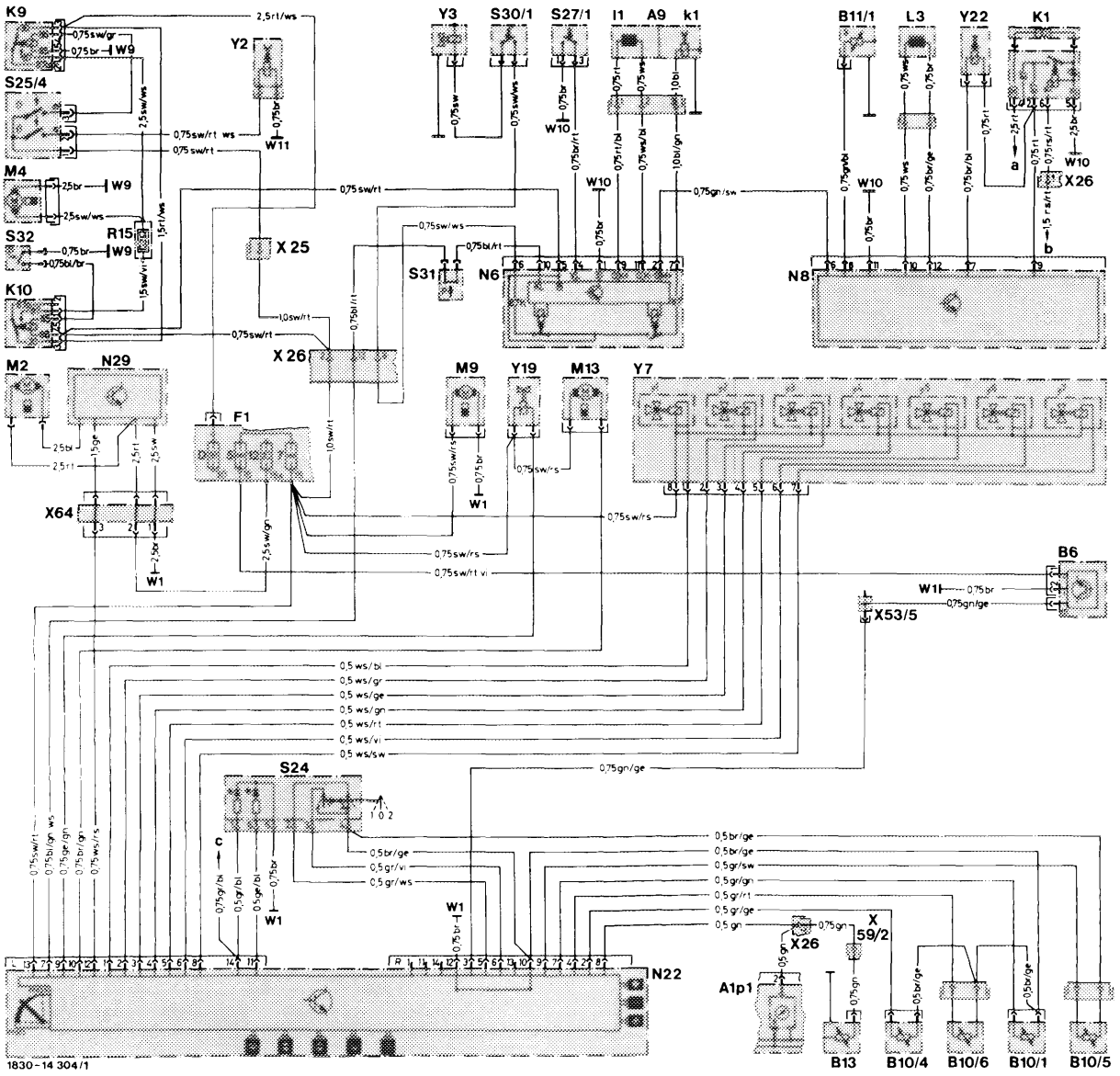

Model 124.120 with automatic transmission up to July 1985

A1	p1	Temperature indicator coolant
A9		Refrigerant compressor
	k1	Electromagnetic coupling
	I1	Rpm sensor
B6		Hall-sensor, speed
B10/1		Temperature sensor, heat exchanger
B10/4		Temperature sensor, interior air
B10/5		Temperature sensor, outside air
B10/6		Temperature sensor, evaporator
B11/1		Temperature sensor, coolant (ELR)
B13		Temperature sensor, coolant indicator
F1		Fuse and relay box
		Fuse 5, terminal 15
		Fuse 7, terminal 15
		Fuse 12, terminal 15X
		Fuse D, terminal 30
K1		Relay, overvoltage protection
K9		Relay, auxiliary fan
K10		Relay, auxiliary fan preresistor
L3		Rpm sensor, starter ring gear
M2		Blower motor
M4		Auxiliary fan
M9		Ventilation blower, temperature sensor interior air
M13		Circulating pump
N6		Control unit, compressor cutout
N22		Automatic climate control unit
N29		Electronic blower regulator
R15		Preresistor, auxiliary fan
S24		Switch, fresh/recirculated air
S25/4		Temperature switch 100/110 °C
S30/1		Kickdown switch
S31/1		Pressure switch, refrigerant compressor, OFF 2.0 bar/ON 2.6 bar
S32		Pressure switch, auxiliary fan, OFF 15.0 bar/ON 20.0 bar
W1		Main ground (behind instrument cluster)
W9		Ground, front left (near headlamp unit)
W10		Ground, battery
W11		Ground, engine (electric cable screwed on)

Ground connection without designation, component directly on engine or body

X25	Connector, preheating cable harness
X26	Connector, engine cable harness, 12-pole
X53/5	Multiple connector/Hall-sensor, 6-pole
X59/2	Connector, temperature sensor coolant
X64	Connector, blower regulator/interior cable harness
Y2	Electromagnetic coupling, engine fan
Y3	Switchover valve, automatic transmission

Y7	Switchover valve block, 7-fold
y1	Fresh/recirculated air flap, small lift
y2	Fresh/recirculated air flap, large lift
y3	Footwell flaps
y4	Center nozzle flap
y5	Defroster nozzle flaps, large lift
y6	Diverter air flap
y7	Defroster nozzle flaps, small lift
Y19	Mono valve, automatic climate control
Y22	Actuating magnet ELR
a	To X35 connector, terminal 30
b	To fuse and relay box, terminal 15, unprotected
c	To X6 connector, terminal 58d, 2-pole

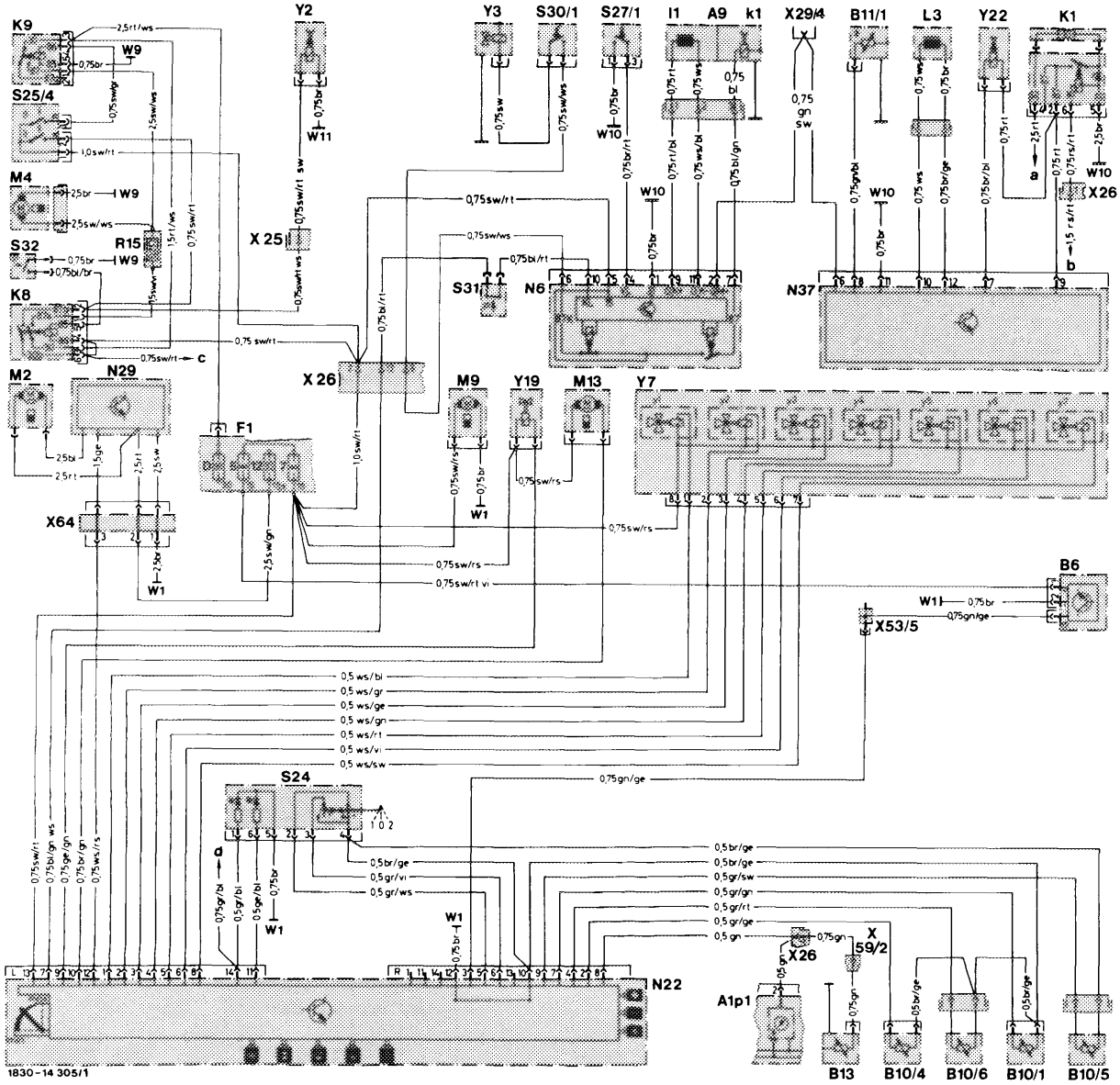

Model 124.120/180 with automatic transmission as of August 1985 up to July 1987

A1	p1	Temperature indicator coolant
A9		Refrigerant compressor
	k1	Electromagnetic coupling
	I1	Rpm sensor
B6		Hall-sensor, speed
B10/1		Temperature sensor, heat exchanger
B10/4		Temperature sensor, interior air
B10/5		Temperature sensor, outside air
B10/6		Temperature sensor, evaporator
B11/1		Temperature sensor, coolant (ELR)
B13		Temperature sensor, coolant indicator
F1		Fuse and relay box
		Fuse 5, terminal 15
		Fuse 7, terminal 15
		Fuse 12, terminal 15X
		Fuse D, terminal 30
K1		Relay, overvoltage protection
K8		Double contact relay, auxiliary fan, magnetic coupling, engine fan
K9		Relay, auxiliary fan
L3		Rpm sensor, starter ring gear
M2		Blower motor
M4		Auxiliary fan
M9		Ventilation blower, temperature sensor interior air
M13		Circulating pump
N6		Control unit, compressor cutout
N22		Automatic climate control unit
N29		Electronic blower regulator
N37		Control unit, exhaust gas recirculation (EGRI)
R15		Preresistor, auxiliary fan
S24		Switch, fresh/recirculated air
S25/4		Temperature switch 100/110 °C
S27/1		Microswitch, compressor cutout
S30/1		Kickdown switch
S31/1		Pressure switch, refrigerant compressor, OFF 2.0 bar/ON 2.6 bar
S32		Pressure switch, auxiliary fan, OFF 15.0 bar/ON 20.0 bar
W1		Main ground (behind instrument cluster)
W9		Ground, front left (near headlamp unit)
W10		Ground, battery
W11		Ground, engine (electric cable screwed on)

Ground connection without designation, component directly on engine or body

X25	Connector, preheating cable harness
X26	Connector, engine cable harness, 12-pole
X29/4	Test coupling TD (EDS), 1-pole
X53/5	Multiple connector/Hall-sensor, 6-pole
X59/2	Connector, temperature sensor coolant
X64	Connector, blower regulator/interior cable harness
Y2	Electromagnetic coupling, engine fan
Y3	Switchover valve, automatic transmission
Y7	Switchover valve block, 7-fold
y1	Fresh/recirculated air flap, small lift
y2	Fresh/recirculated air flap, large lift
y3	Footwell flaps
y4	Center nozzle flap
y5	Defroster nozzle flaps, large lift
y6	Diverter air flap
y7	Defroster nozzle flaps, small lift
Y19	Mono valve, automatic climate control
Y22	Actuating magnet ELR
a	To X35 connector, terminal 30
b	To fuse and relay box, terminal 15, unprotected
c	To washer nozzle heater, left
d	To X6 connector, terminal 58d, 2-pole

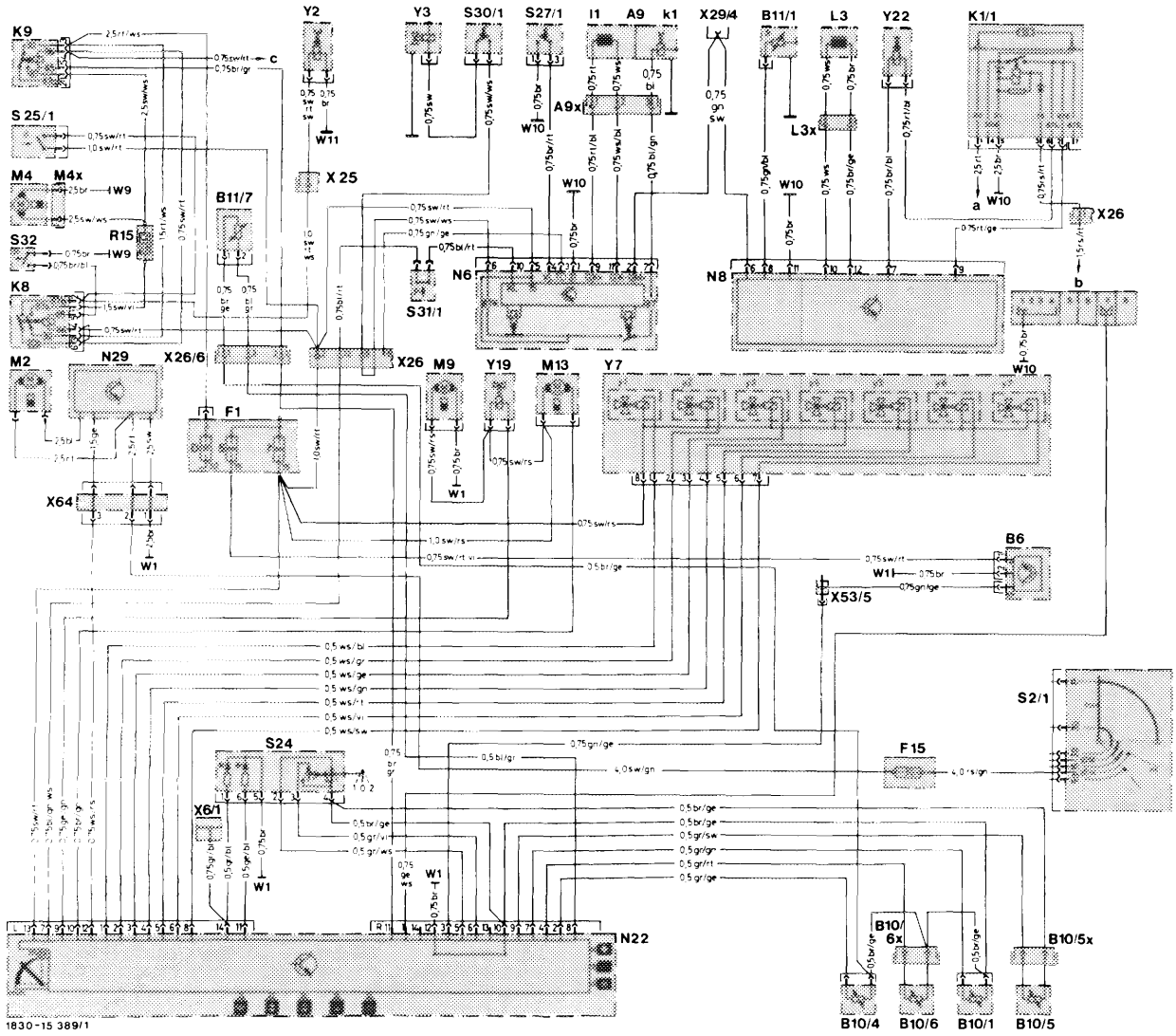

Models 124.120/180 with automatic transmission as of August 1987

A9		Refrigerant compressor
	k1	Electromagnetic coupling
	I1	Rpm sensor
A9x		Connector, refrigerant compressor
B6		Hall-sensor, speed
B10/1		Temperature sensor, heat exchanger
B10/4		Temperature sensor, interior air
B10/5		Temperature sensor, outside air
B10/5x		Connector, temperature sensor outside air
B10/6		Temperature sensor, evaporator
B10/6x		Connector, temperature sensor evaporator
B11/7		Temperature sensor, coolant (blue)
F1		Fuse and relay box
		Fuse 5: 8 A
		Fuse 7: 8 A
		Fuse D: 16 A
F15		Auxiliary fuse holder, blower motor
K1/1		Relay, overvoltage protection 87E/87L (7-pole)
K8		Double contact relay, auxiliary fan, magnetic coupling, engine fan
K9		Relay, auxiliary fan
L3		Rpm sensor, starter ring gear
L3x		Connector, rpm sensor, starter ring gear
M2		Blower motor
M4		Auxiliary fan
M9		Ventilation blower, temperature sensor interior air
M13		Circulating pump
N6		Control unit, compressor cutout
N22		Automatic climate control unit
N29		Electronic blower regulator
R15		Preresistor, auxiliary fan
S2/2		Glow-starter switch
S24		Switch, fresh/recirculated air
S25/1		Temperature switch 100 °C
S27/1		Microswitch, compressor cutout
S30/1		Kickdown switch
S31/1		Pressure switch, refrigerant compressor, OFF 2.0/30 bar ON 2.6/22 bar
S32		Pressure switch, auxiliary fan OFF 15 bar/ON 20 bar
W1		Main ground (behind instrument cluster)
W9		Ground, front left (near headlamp unit)
W10		Ground, battery
W11		Ground, engine (electric cable screwed on)

Ground without designation, component directly on engine or body

X6/1	Connector, terminal 58D
X25	Connector, preheating cable harness
X26	Connector, engine cable harness, 12-pole
X26/6	Connector, engine cable harness, Tempmatic/automatic climate control, 3-pole
X53/5	Multiple connector/Hall-sensor
X64	Connector, blower regulator/interior cable harness
X92	Diagnostic test coupling, 8-pole (flash code)
Y2	Electromagnetic coupling, engine fan
Y3	Switchover valve, automatic transmission
Y7	Switchover valve block, 7-fold
y1	Fresh/recirculated air flap, small lift
y2	Fresh/recirculated air flap, large lift
y3	Footwell flaps
y4	Center nozzle flap
y5	Defroster nozzle flaps, large lift
y6	Diverter air flap
y7	Defroster nozzle flaps, small lift
Y19	Mono valve
a	To the connector, terminal 30
b	To the fuse box, terminal 15, unprotected
c	To the washer nozzle heating, left

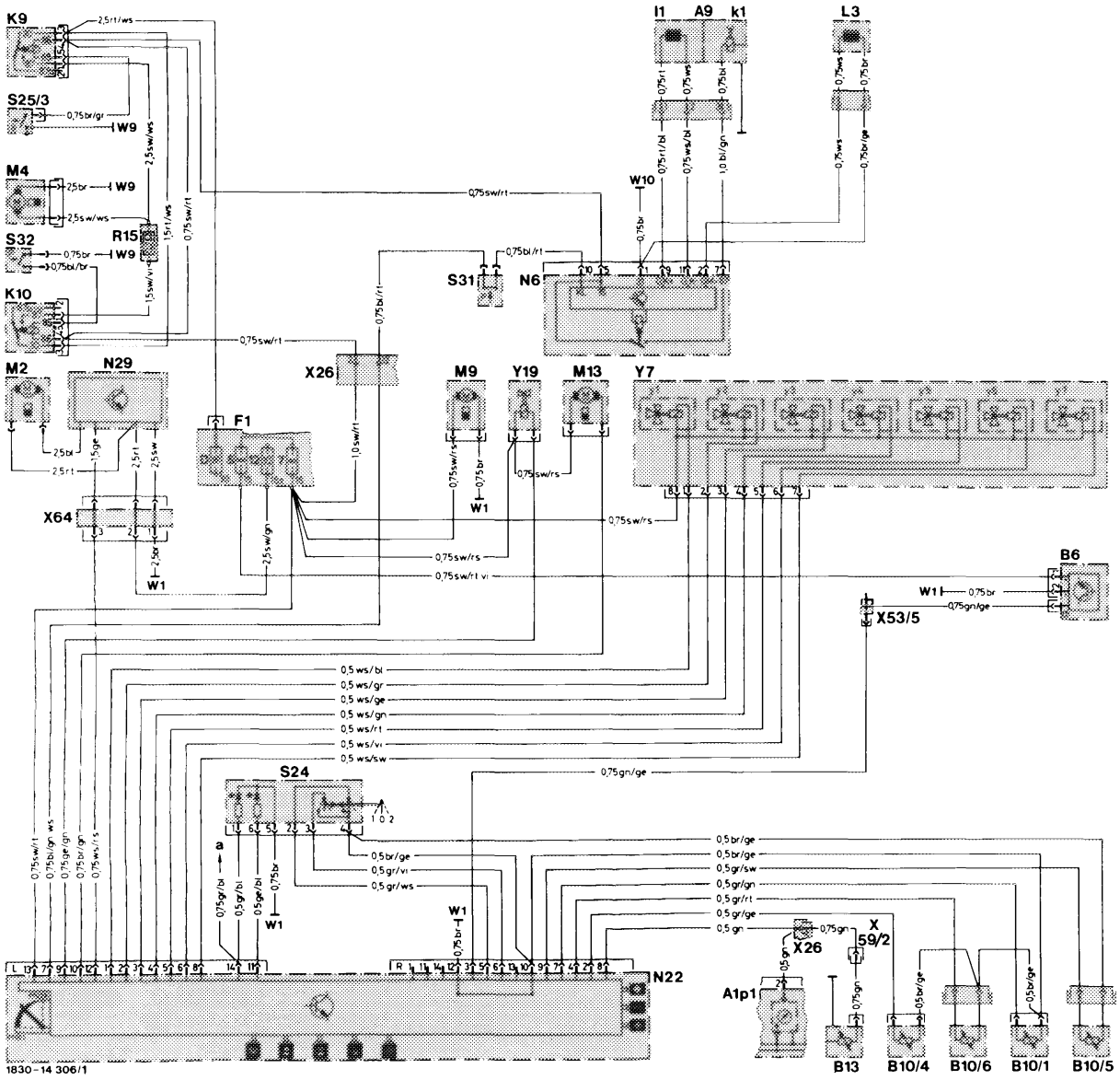

Model 124.125 with manual transmission up to July 1985

A1	p1	Temperature indicator coolant
A9		Refrigerant compressor
	k1	Electromagnetic coupling
	I1	Rpm sensor
B6		Hall-sensor, speed
B10/1		Temperature sensor, heat exchanger
B10/4		Temperature sensor, interior air
B10/5		Temperature sensor, outside air
B10/6		Temperature sensor, evaporator
B13		Temperature sensor, coolant indicator
F1		Fuse and relay box
		Fuse 5, terminal 15
		Fuse 7, terminal 15
		Fuse 12, terminal 15X
		Fuse D, terminal 30
K9		Relay, auxiliary fan
K10		Relay, auxiliary fan preresistor
L3		Rpm sensor, starter ring gear
M2		Blower motor
M4		Auxiliary fan
M9		Ventilation blower, temperature sensor interior air
M13		Circulating pump
N6		Control unit, compressor cutout
N22		Automatic climate control unit
N29		Electronic blower regulator
R15		Preresistor, auxiliary fan
S24		Switch, fresh/recirculated air
S25/3		Temperature switch 110 °C
S31/1		Pressure switch, refrigerant compressor, OFF 2.0 bar/ON 2.6 bar
S32		Pressure switch, auxiliary fan, OFF 15.0 bar/ON 20.0 bar
W1		Main ground (behind instrument cluster)
W9		Ground, front left (near headlamp unit)
W10		Ground, battery
W11		Ground, engine (electrical cable screwed on)

Ground connection without designation, component directly on engine or body

X26	Connector, engine cable harness, 12-pole
X53/5	Multiple connector/Hall-sensor, 6-pole
X59/2	Connector, temperature sensor coolant
X64	Connector, blower regulator/interior cable harness

Y7		Switchover valve block, 7-fold
	y1	Fresh/recirculated air flap, small lift
	y2	Fresh/recirculated air flap, large lift
	y3	Footwell flaps
	y4	Center nozzle flap
	y5	Defroster nozzle flaps, large lift
	y6	Diverter air flap
	y7	Defroster nozzle flaps, small lift
Y19		Mono valve, automatic climate control
a		To X6 connector, terminal 58d, 2-pole

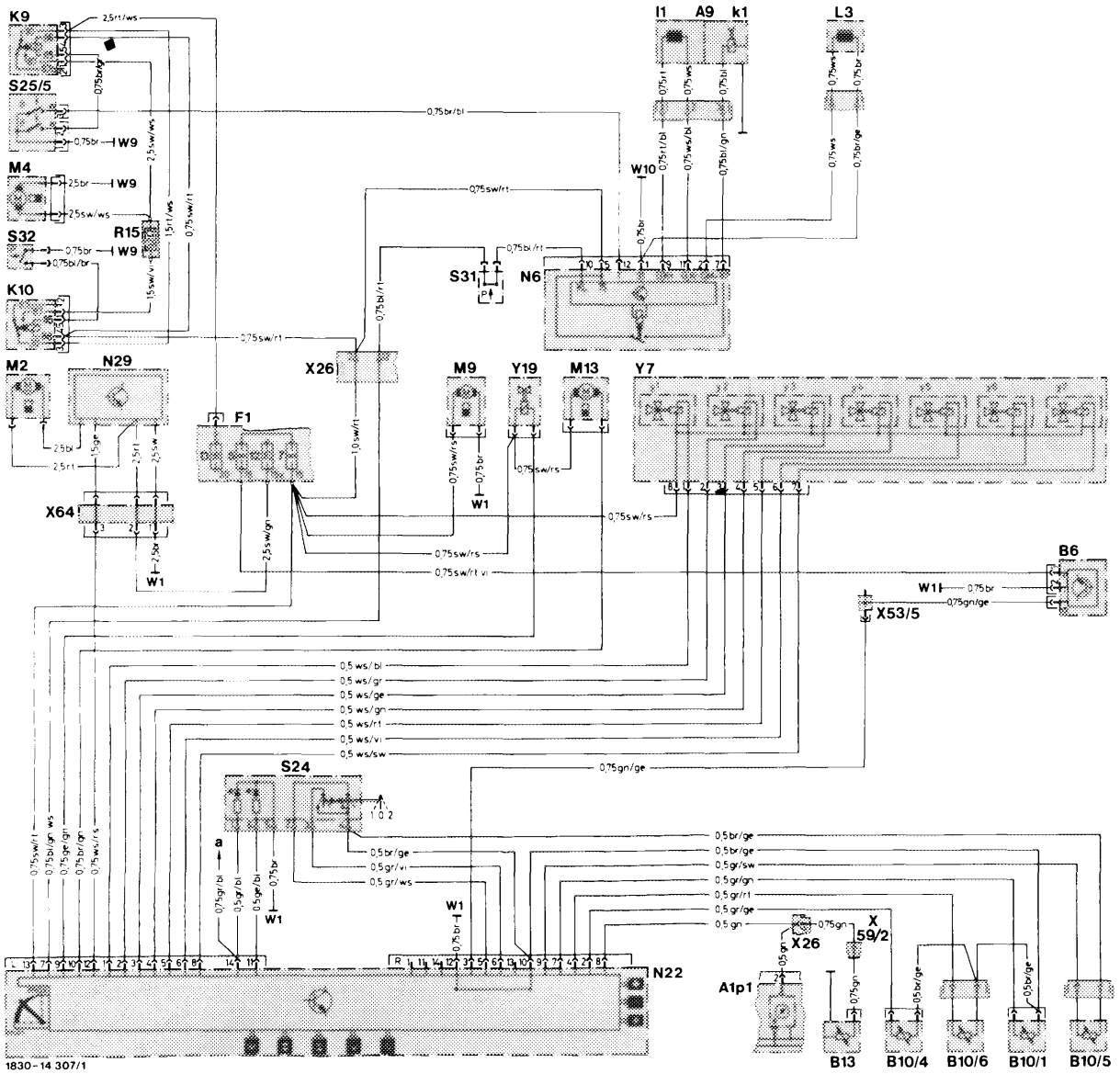

Model 124.125/185 with manual transmission from August 1985 to July 1987

A1	p1	Temperature indicator coolant
A9		Refrigerant compressor
	k1	Electromagnetic coupling
	I1	Rpm sensor
B6		Hall-sensor, speed
B10/1		Temperature sensor, heat exchanger
B10/4		Temperature sensor, interior air
B10/5		Temperature sensor, outside air
B10/6		Temperature sensor, evaporator
B13		Temperature sensor, coolant indicator
F1		Fuse and relay box
		Fuse 5, terminal 15
		Fuse 7, terminal 15
		Fuse 12, terminal 15X
		Fuse D, terminal 30
K9		Relay, auxiliary fan
K10		Relay, auxiliary fan preresistor
L3		Rpm sensor, starter ring gear
M2		Blower motor
M4		Auxiliary fan
M9		Ventilation blower, temperature sensor interior air
M13		Circulating pump
N6		Control unit, compressor cutout
N22		Automatic climate control unit
N29		Electronic blower regulator
R15		Preresistor, auxiliary fan
S24		Switch, fresh/recirculated air
S25/5		Temperature switch 105/115 °C
		a 105 °C for auxiliary fan
		b 115 °C for compressor/emergency cutout
S31/1		Pressure switch, refrigerant compressor, OFF 2.0 bar/ON 2.6 bar
S32		Pressure switch, auxiliary fan, OFF 15.0 bar/ON 20.0 bar
W1		Main ground (behind instrument cluster)
W9		Ground, front left (near headlamp unit)
W10		Ground, battery

Ground connection without designation, component directly on engine or body

X26	Connector, engine cable harness, 12-pole
X53/5	Multiple connector/Hall-sensor, 6-pole
X59/2	Connector, temperature sensor coolant
X64	Connector, blower regulator/interior cable harness

Y7		Switchover valve block, 7-fold
	y1	Fresh/recirculated air flap, small lift
	y2	Fresh/recirculated air flap, large lift
	y3	Footwell flaps
	y4	Center nozzle flap
	y5	Defroster nozzle flaps, large lift
	y6	Diverter air flap
	y7	Defroster nozzle flaps, small lift
Y19		Mono valve, automatic climate control
a		To X6 connector, terminal 58d, 2-pole

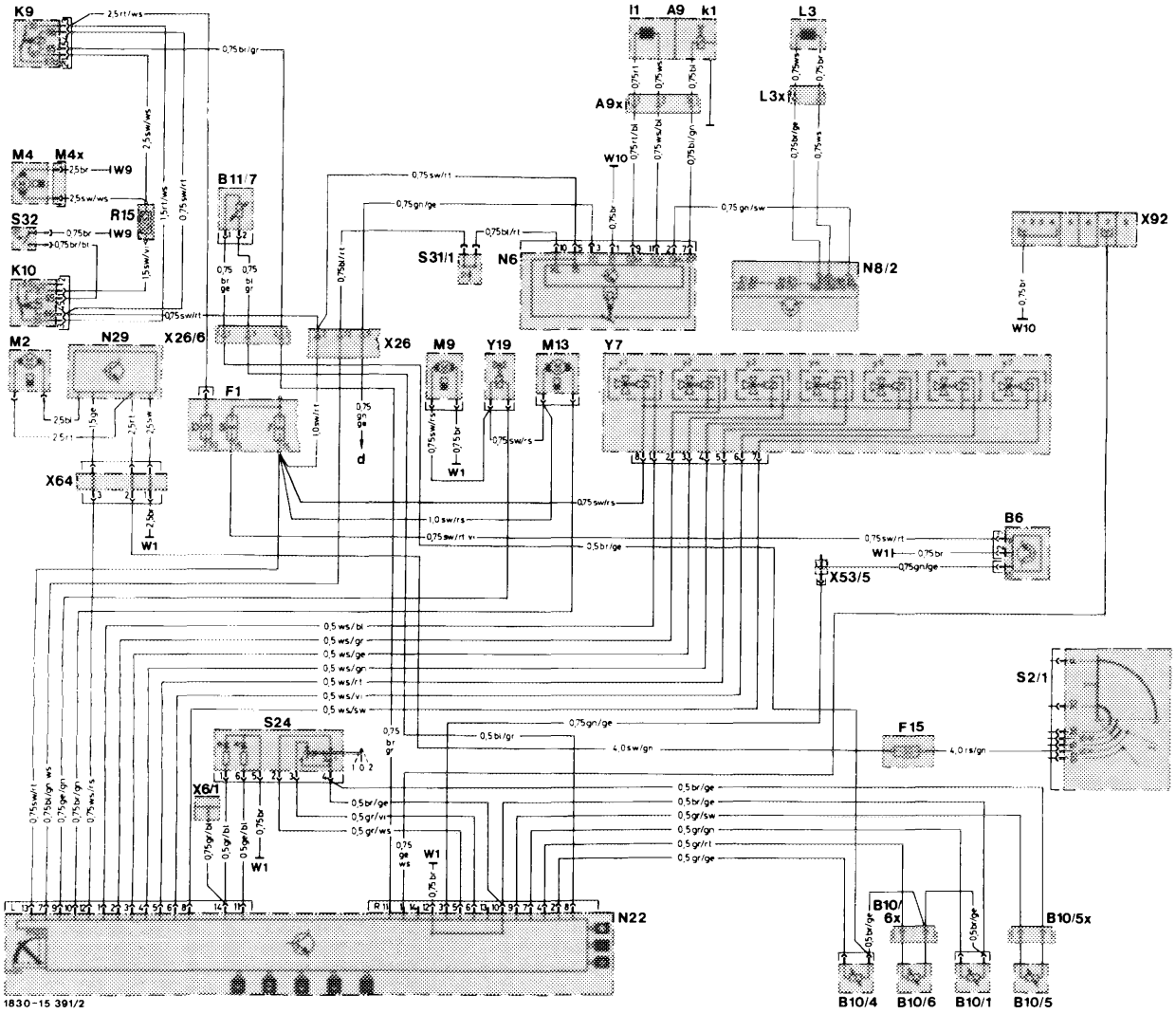

Models 124.125/185 with manual transmission as of August 1987

A9	Refrigerant compressor
k1	Electromagnetic coupling
I1	Rpm sensor
A9x	Connector, refrigerant compressor
B6	Hall-sensor, speed
B10/1	Temperature sensor, heat exchanger
B10/4	Temperature sensor, interior air
B10/5	Temperature sensor, outside air
B10/5x	Connector, temperature sensor outside air
B10/6	Temperature sensor, evaporator
B10/6x	Connector, temperature sensor evaporator
B11/7	Temperature sensor, coolant (blue)
F1	Fuse and relay box
	Fuse 5: 8 A
	Fuse 7: 8 A
	Fuse D: 16 A
F15	Auxiliary fuse holder, blower motor
K9	Relay, auxiliary fan
L3	Rpm sensor, starter ring gear
L3x	Connector, rpm sensor, starter ring gear
M2	Blower motor
M4	Auxiliary fan
M9	Ventilation blower, temperature sensor interior air
M13	Circulating pump
N6	Control unit, compressor cutout
N22	Automatic climate control unit
N29	Electronic blower regulator
R15	Preresistor, auxiliary fan
S2/2	Glow-starter switch
S24	Switch, fresh/recirculated air
S31/1	Pressure switch, refrigerant compressor, OFF 2.0/30 bar ON 2.6/22 bar
S32	Pressure switch, auxiliary fan OFF 15 bar/ON 20 bar
W1	Main ground (behind instrument cluster)
W9	Ground, front left (near headlamp unit)
W10	Ground, battery

Ground without designation, component directly on engine or body

X6/1	Connector, terminal 58D
X26	Connector, engine cable harness, 12-pole
X26/6	Connector, engine cable harness, Tempmatic/automatic climate control, 3-pole
X53/5	Multiple connector/Hall-sensor
X64	Connector, blower regulator/interior cable harness
X92	Diagnostic test coupling, 8-pole (flash code)

Y7	Switchover valve block, 7-fold
y1	Fresh/recirculated air flap, small lift
y2	Fresh/recirculated air flap, large lift
y3	Footwell flaps
y4	Center nozzle flap
y5	Defroster nozzle flaps, large lift
y6	Diverter air flap
y7	Defroster nozzle flaps, small lift
Y19	Mono valve
d	To the speedometer A1p7

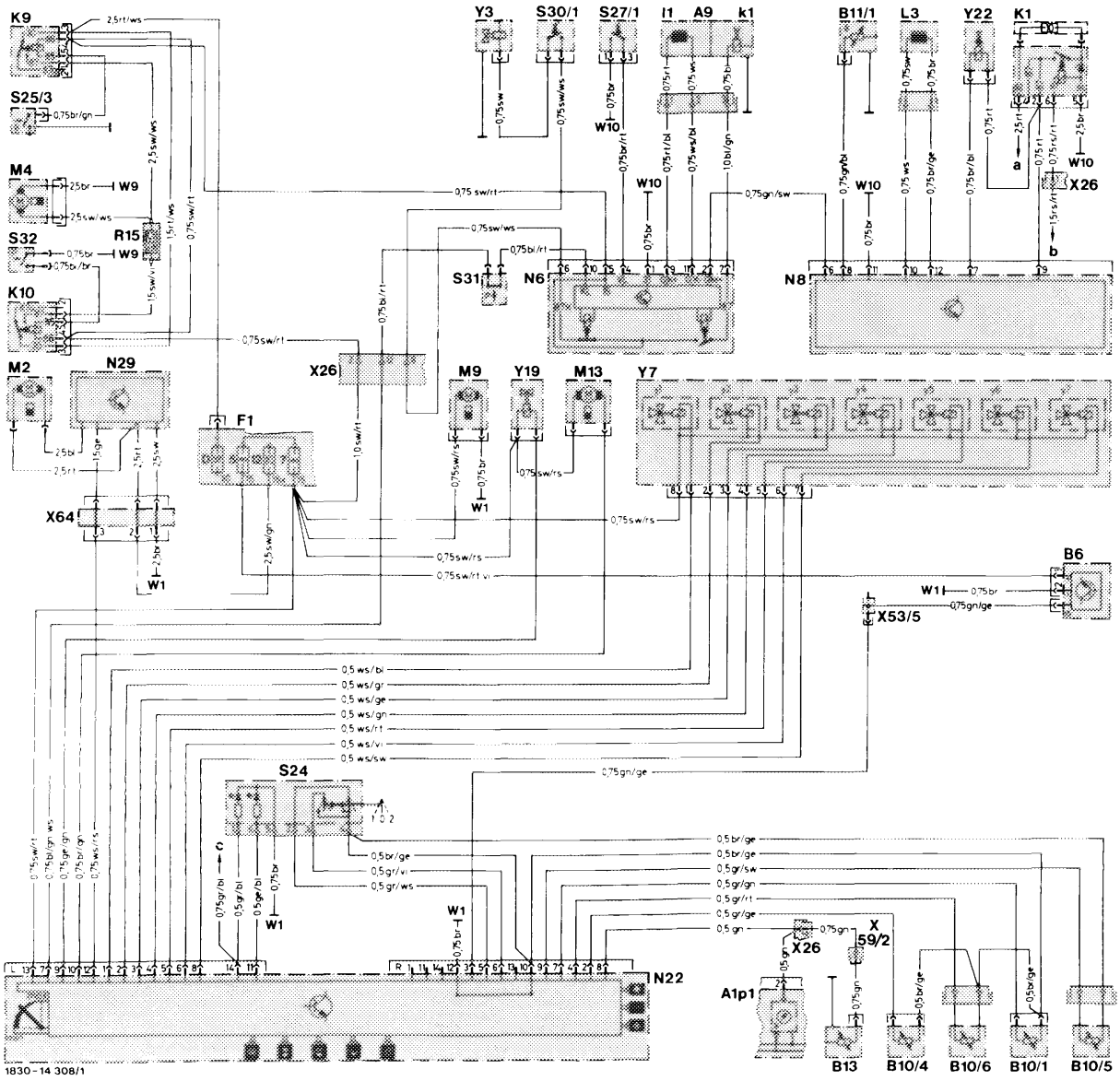

Model 124.125/130 with automatic transmission up to July 1985

A1 p1	Temperature indicator coolant
A9	Refrigerant compressor
k1	Electromagnetic coupling
I1	Rpm sensor
B6	Hall-sensor, speed
B10/1	Temperature sensor, heat exchanger
B10/4	Temperature sensor, interior air
B10/5	Temperature sensor, outside air
B10/6	Temperature sensor, evaporator
B11/1	Temperature sensor, coolant (ELR)
B13	Temperature sensor, coolant indicator
F1	Fuse and relay box
	Fuse 5, terminal 15
	Fuse 7, terminal 15
	Fuse 12, terminal 15X
	Fuse D, terminal 30
K1	Relay, overvoltage protection
K9	Relay, auxiliary fan
K10	Relay, auxiliary fan preresistor
L3	Rpm sensor, starter ring gear
M2	Blower motor
M4	Auxiliary fan
M9	Ventilation blower, temperature sensor interior air
M13	Circulating pump
N6	Control unit, compressor cutout
N8	Control unit, idle speed control
N22	Automatic climate control unit
N29	Electronic blower regulator
R15	Preresistor, auxiliary fan
S24	Switch, fresh/recirculated air
S25/3	Temperature switch 110 °C
S27/1	Microswitch, compressor cutout
S30/1	Kickdown switch
S31/1	Pressure switch, refrigerant compressor, OFF 2.0 bar/ON 2.6 bar
S32	Pressure switch, auxiliary fan, OFF 15.0 bar/ON 20.0 bar
W1	Main ground (behind instrument cluster)
W9	Ground, front left (near headlamp unit)
W10	Ground, battery

Ground connection without designation, component directly on engine or body

X26	Connector, engine cable harness, 12-pole
X53/5	Multiple connector/Hall-sensor, 6-pole
X59/2	Connector, temperature sensor coolant
X64	Connector, blower regulator/interior cable harness
Y3	Switchover valve, automatic transmission
Y7	Switchover valve block, 7-fold
y1	Fresh/recirculated air flap, small lift
y2	Fresh/recirculated air flap, large lift
y3	Footwell flaps
y4	Center nozzle flap
y5	Defroster nozzle flaps, large lift
y6	Diverter air flap
y7	Defroster nozzle flaps, small lift
Y19	Mono valve, automatic climate control
Y22	Actuating magnet ELR
a	To X35 connector, terminal 30
b	To fuse and relay box, terminal 15, unprotected
c	To X6 connector, terminal 58d, 2-pole

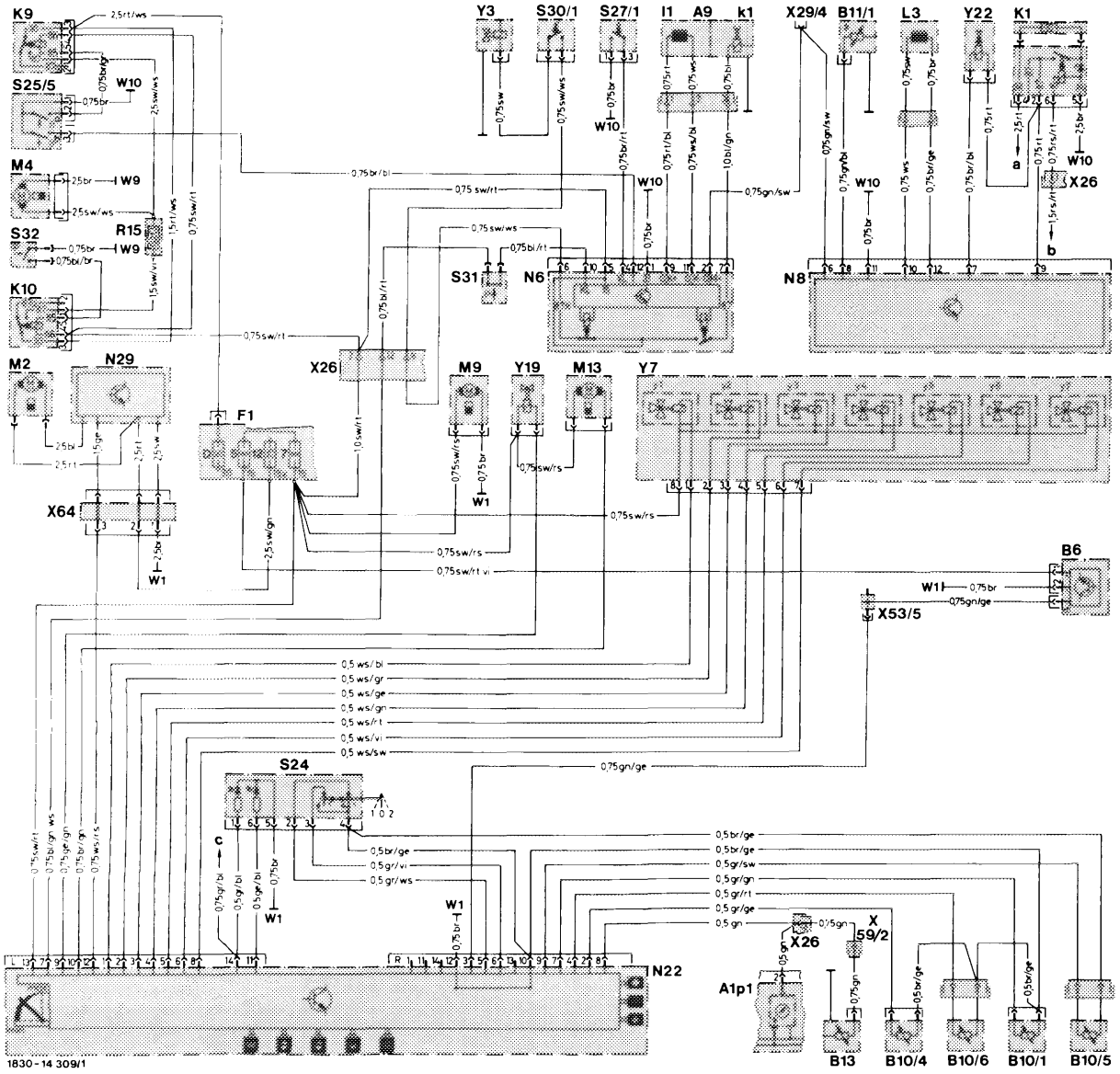

Model 124.125/130/185/190/193/330/393 with automatic transmission from August 1985 to July 1987

A1	p1	Temperature indicator coolant
A9		Refrigerant compressor
	k1	Electromagnetic coupling
	I1	Rpm sensor
B6		Hall-sensor, speed
B10/1		Temperature sensor, heat exchanger
B10/4		Temperature sensor, interior air
B10/5		Temperature sensor, outside air
B10/6		Temperature sensor, evaporator
B11/1		Temperature sensor, coolant (ELR)
B13		Temperature sensor, coolant indicator
F1		Fuse and relay box
		Fuse 5, terminal 15
		Fuse 7, terminal 15
		Fuse 12, terminal 15X
		Fuse D, terminal 30
K1		Relay, overvoltage protection
K9		Relay, auxiliary fan
K10		Relay, auxiliary fan preresistor
L3		Rpm sensor, starter ring gear
M2		Blower motor
M4		Auxiliary fan
M9		Ventilation blower, temperature sensor interior air
M13		Circulating pump
N6		Control unit, compressor cutout
N8		Control unit, idle speed control
N22		Automatic climate control unit
N29		Electronic blower regulator
R15		Preresistor, auxiliary fan
S24		Switch, fresh/recirculated air
S25/5		Temperature switch 105/115 °C
		a 105 °C for auxiliary fan
		b 115 °C for compressor/emergency cutout
S27/1		Microswitch, compressor cutout
S30/1		Kickdown switch
S31/1		Pressure switch, refrigerant compressor, OFF 2.0 bar/ON 2.6 bar
S32		Pressure switch, auxiliary fan, OFF 15.0 bar/ON 20.0 bar
W1		Main ground (behind instrument cluster)
W9		Ground, front left (near headlamp unit)
W10		Ground, battery

Ground connection without designation, component directly on engine or body

X26	Connector, engine cable harness, 12-pole
X29/4	Test coupling TD (EDS) 1-pole
X53/5	Multiple connector/Hall-sensor, 6-pole
X59/2	Connector, temperature sensor coolant
X64	Connector, blower regulator/interior cable harness
Y3	Switchover valve, automatic transmission
Y7	Switchover valve block, 7-fold
y1	Fresh/recirculated air flap, small lift
y2	Fresh/recirculated air flap, large lift
y3	Footwell flaps
y4	Center nozzle flap
y5	Defroster nozzle flaps, large lift
y6	Diverter air flap
y7	Defroster nozzle flaps, small lift
Y19	Mono valve, automatic climate control
Y22	Actuating magnet ELR
a	To X35 connector, terminal 30
b	To fuse and relay box, terminal 15, unprotected
c	To X6 connector, terminal 58d, 2-pole

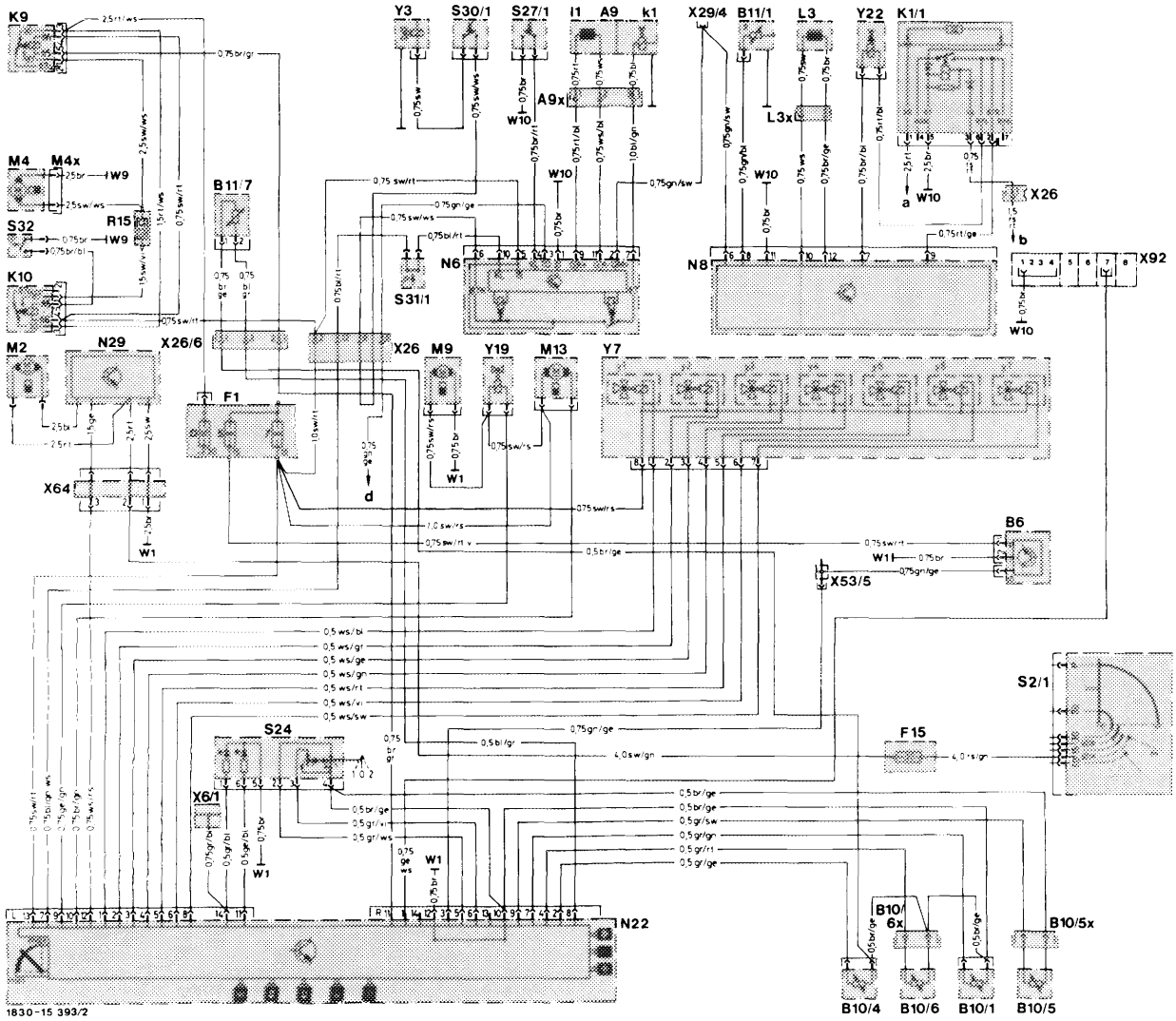

Models 124.125/130/185/190/193/330/393 with automatic transmission as of August 1987

A9	Refrigerant compressor
k1	Electromagnetic coupling
I1	Rpm sensor
A9x	Connector, refrigerant compressor
B6	Hall-sensor, speed
B10/1	Temperature sensor, heat exchanger
B10/4	Temperature sensor, interior air
B10/5	Temperature sensor, outside air
B10/5x	Connector, temperature sensor outside air
B10/6	Temperature sensor, evaporator
B10/6x	Connector, temperature sensor evaporator
B11/1	Temperature sensor, coolant (ELR)
B11/7	Temperature sensor, coolant (blue)
F1	Fuse and relay box
	Fuse 5: 8 A
	Fuse 7: 8 A
	Fuse D: 16 A
F15	Auxiliary fuse holder, blower motor
K1/1	Relay, overvoltage protection 87E/87L (7-pole)
K9	Relay, auxiliary fan
K10	Relay, auxiliary fan preresistor
L3	Rpm sensor, starter ring gear
L3x	Connector, rpm sensor, starter ring gear
M2	Blower motor
M4	Auxiliary fan
M9	Ventilation blower, temperature sensor interior air
M13	Circulating pump
N6	Control unit, compressor cutout
N8	Control unit, idle speed control
N22	Automatic climate control unit
N29	Electronic blower regulator
R15	Preresistor, auxiliary fan
S2/2	Glow-starter switch
S24	Switch, fresh/recirculated air
S27/1	Microswitch, compressor cutout
S30/1	Kickdown switch
S31/1	Pressure switch, refrigerant compressor, OFF 2.0/30 bar ON 2.6/22 bar
S32	Pressure switch, auxiliary fan OFF 15 bar/ON 20 bar
W1	Main ground (behind instrument cluster)
W9	Ground, front left (near headlamp unit)
W10	Ground, battery

Ground without designation, component directly on engine or body

X6/1	Connector, terminal 58D
X26	Connector, engine cable harness, 12-pole
X26/6	Connector, engine cable harness, Tempmatic/automatic climate control, 3-pole
X29/4	Test coupling TD (EDS) 1-pole
X53/5	Multiple connector/Hall-sensor
X64	Connector, blower regulator/interior cable harness
X92	Diagnostic test coupling, 8-pole (flash code)
Y3	Switchover valve, automatic transmission
Y7	Switchover valve block, 7-fold
y1	Fresh/recirculated air flap, small lift
y2	Fresh/recirculated air flap, large lift
y3	Footwell flaps
y4	Center nozzle flap
y5	Defroster nozzle flaps, large lift
y6	Diverter air flap
y7	Defroster nozzle flaps, small lift
Y19	Mono valve
Y22	Actuating magnet ELR
d	To the speedometer A1p7

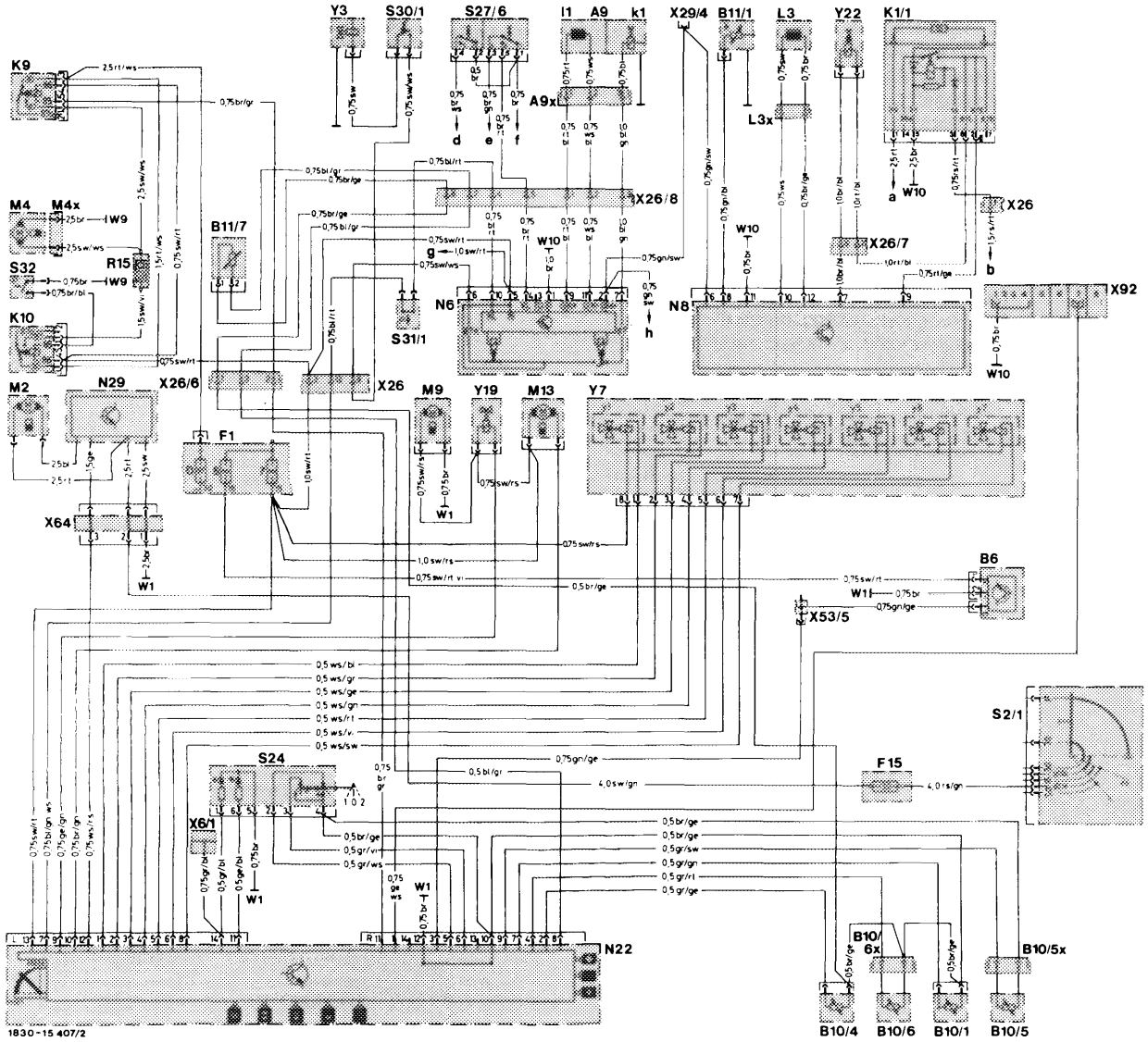

Models 124.130 CH as of start of series production

A9		Refrigerant compressor
	k1	Electromagnetic coupling
	I1	Rpm sensor
A9x		Connector, refrigerant compressor
B6		Hall-sensor, speed
B10/1		Temperature sensor, heat exchanger
B10/4		Temperature sensor, interior air
B10/5		Temperature sensor, outside air
B10/5x		Connector, temperature sensor outside air
B10/6		Temperature sensor, evaporator
B10/6x		Connector, temperature sensor evaporator
B11/1		Temperature sensor, coolant (ELR)
B11/7		Temperature sensor, coolant (blue)
F1		Fuse and relay box
		Fuse 5: 8 A
		Fuse 7: 8 A
		Fuse D: 16 A
F15		Auxiliary fuse holder, blower motor
K1/1		Relay, overvoltage protection 87E/87L (7-pole)
K9		Relay, auxiliary fan
K10		Relay, auxiliary fan preresistor
L3		Rpm sensor, starter ring gear
L3x		Connector, rpm sensor, starter ring gear
M2		Blower motor
M4		Auxiliary fan
M9		Ventilation blower, temperature sensor interior air
M13		Circulating pump
N6		Control unit, compressor cutout
N8		Control unit, idle speed control
N22		Automatic climate control unit
N29		Electronic blower regulator
R15		Preresistor, auxiliary fan
S2/2		Glow-starter switch
S24		Switch, fresh/recirculated air
S27/6		Microswitch, compressor cutout/EGR
S30/1		Kickdown switch
S31/1		Pressure switch, refrigerant compressor, OFF 2.0/30 bar ON 2.6/22 bar
S32		Pressure switch, auxiliary fan OFF 15 bar/ON 20 bar
W1		Main ground (behind instrument cluster)
W9		Ground, front left (near headlamp unit)
W10		Ground, battery

Ground without designation, component directly on engine or body

X6/1	Connector, terminal 58D
X26	Connector, engine cable harness, 12-pole
X26/6	Connector, engine cable harness, Tempmatic/automatic climate control, 3-pole
X26/7	Connector, engine cable harness/engine cable harness, 12- pole
X26/8	Connector, engine cable harness/engine cable harness, 8-pole
X29/4	Test coupling TD (EDS) 1-pole
X53/5	Multiple connector/Hall-sensor
X64	Connector, blower regulator/interior cable harness
X92	Diagnostic test coupling, 8-pole (flash code)
Y3	Switchover valve, automatic transmission
Y7	Switchover valve block, 7-fold
y1	Fresh/recirculated air flap, small lift
y2	Fresh/recirculated air flap, large lift
y3	Footwell flaps
y4	Center nozzle flap
y5	Defroster nozzle flaps, large lift
y6	Diverter air flap
y7	Defroster nozzle flaps, small lift
Y19	Mono valve
Y22	Actuating magnet ELR
a	To the connector, terminal 30
b	To the fuse box, terminal 15, unprotected
d	To the control unit, exhaust gas recirculation, jack 10
e	To the control unit, exhaust gas recirculation, jack 5
f	To battery ground
g	To the control unit, exhaust gas recirculation, jack 9
h	To the control unit, exhaust gas recirculation, jack 2

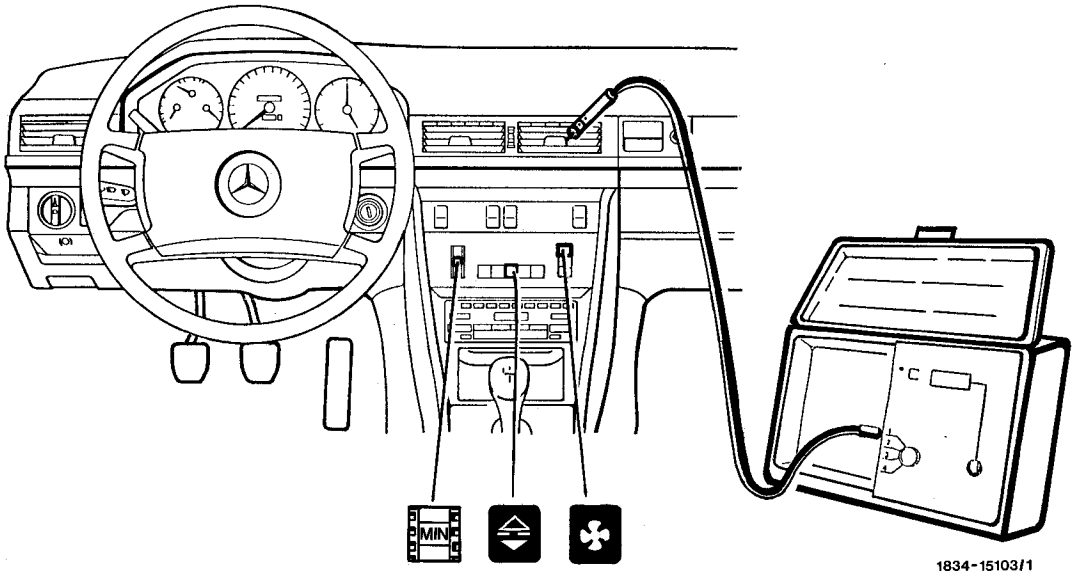

Test conditions	Observe items 1 to 4
Differential between coldest and warmest outlet temperature	Measured between switching off and switching on of the refrigerant compressor max. 3°C
Coldest air outlet temperature from center nozzle	Measure + 5 ± 1°C with selector wheel position MIN engaged and function selections

Conventional tools

2 thermometers	– 20 °C to + 70 °C

Digital temperature measuring instrument with 4 measuring probes

Robbi temp 90020
Air temperature measuring probe 90023
(4.5 m cable length)

Supplier, e.g.:
Switzerland: Kent-Moore (Europe) AG
P.O. Box, CH–6340 Baar
Germany: Kälte-Fischer
Postfach 266, Augsburgerstr. 289-291
D–70327 Stuttgart

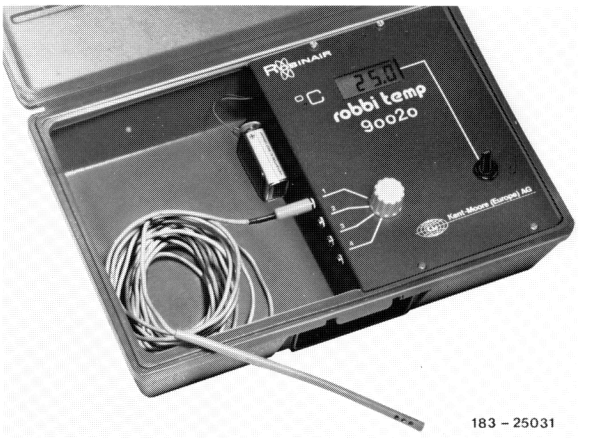

183 – 25031

Digital temperature measuring instrument with 4 measuring probes

Therm 2263-2
4-fold measuring point
changeover switch 2235-4
Air temperature measuring probe W453-5
(3 m cable length)

Supplier, e.g.:
Germany: Ahlborn Meß- und Regelungstechnik,
Eichenfeldstr. 1 - 3,
D–83607 Holzkirchen

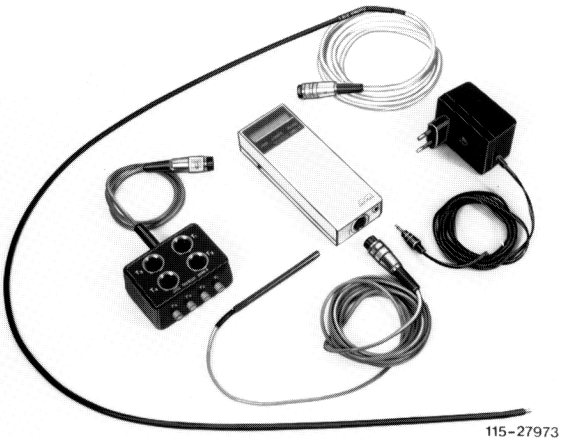
115–27973

Note
Carry out test after minor repairs, prolonged disuse etc.

Test conditions

1 The vehicle should not be exposed to the sun before and during the test.

2 Check tension of the poly-V-belt for the compressor drive.

3 Check auxiliary fan function by switching on the ignition and shorting the two flat terminals on the pressure switch (S32 or S32/1). The auxiliary fan should start running at the 1st speed.

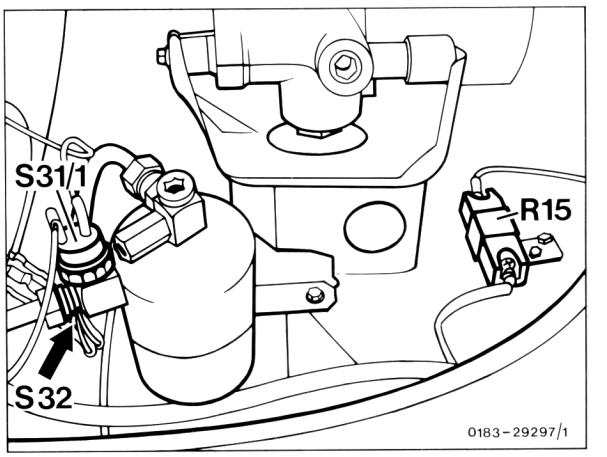

Then bridge the 2-pole coupling on the temperature switch (S25/4 or S25/5). The auxiliary fan 2nd speed should start up. Simultaneously observe the direction of rotation of the auxiliary fan (clockwise). On vehicles with 1-pole temperature switch (up to approx. 8/85), hold the 1-pole coupling to ground.

S25/4 Temperature switch 100/110 °C
Model 124.0 with 4-cylinder engine

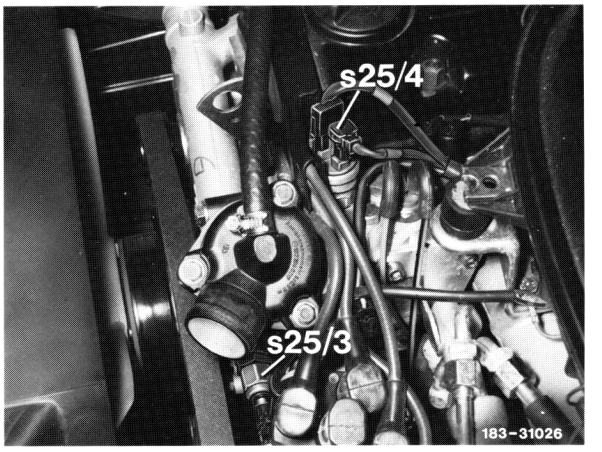

S25/5 Temperature switch 105/115 °C
Model 124.0/2 with 6-cylinder engine

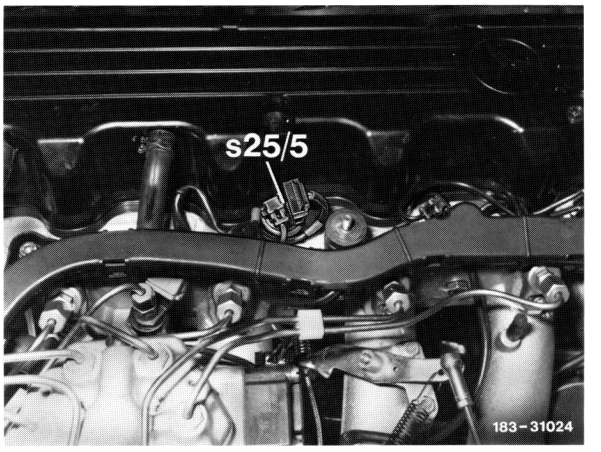

S25/4, S25/5 Temperature switch 100/110 °C and 105/115 °C
Models 124.1/3

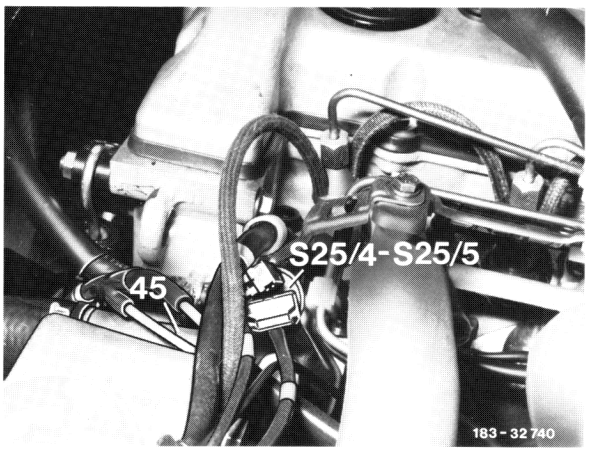

4 Check fluid level in the air conditioner. To do so, pull off a cable on the pressure switch (S31/1), allow engine to run at idle speed (> 750/min) and switch on the automatic climate control with the function selection . Clean the sight glass (arrow) in the fluid reservoir. Observe sight glass and reconnect the cable to pressure switch (S31/1) at the same time. Shortly before the electromagnetic coupling is switched on, the refrigerant should rise and subsequently flow through without bubbles (i.e. refrigerant no longer visible).

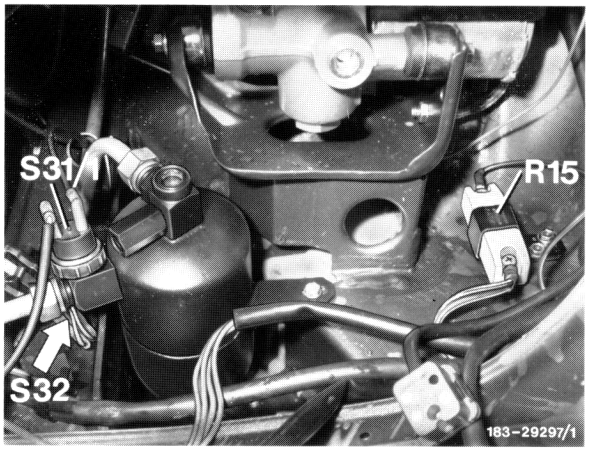

Caution!
At pressures < 2 bar, the control for the refrigerant compressor is interrupted by the pressure switch (S31/1). The circuit is closed again when the pressure is > 0.6 bar above the switch-off pressure.

Note
If the refrigerant compressor is not switched on, bridge the cables to the pressure switch (S31/1) and check fluid level according to item 4. If the refrigerant compressor is still not switched on, check the compressor cut-out (83-605) or the activation of the compressor (83-604).

Checking

1 Engage temperature selector wheel (A) in "MIN".

2 On the pushbutton switch (b), switch on the function selection and on the blower switch (c) the function selection .

3 Open the center and lateral nozzles and switch off switch (S24) (fresh air).

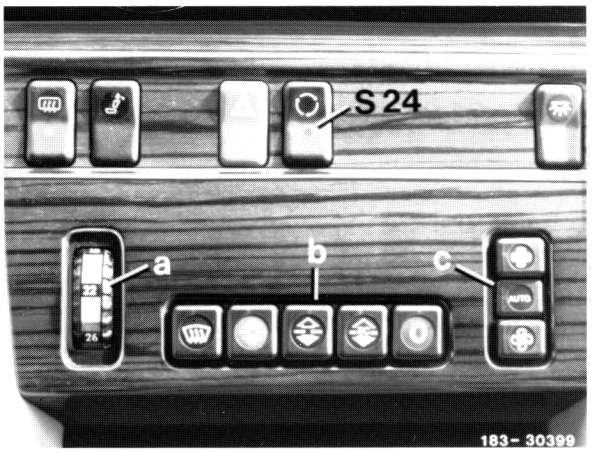

4 Insert a thermometer in the left or right center nozzle.

5 Provide a thermometer for ambient temperature (room temperature) approx. 2 m from the driver's side of the outside of the vehicle.

6 Open the window and close the vehicle doors. Run engine with approx. 2000/min.

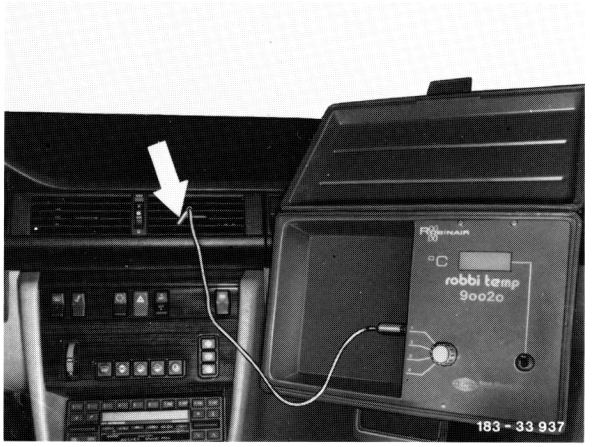

7 After approx. 5 minutes, read the air outlet temperature of the center nozzle and the outside temperature on the two thermometers and compare with the values in the diagram.

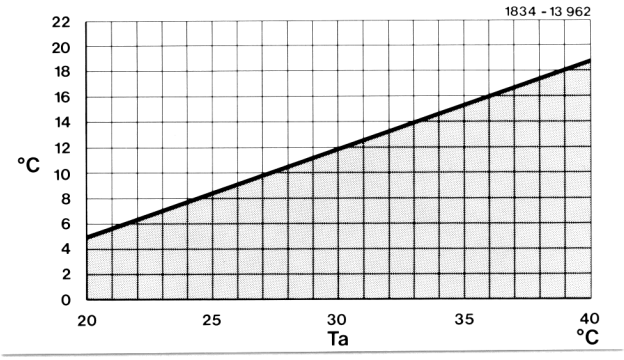

Diagram
Ta Outside temperature °C

Note
If the refrigerating capacity is inadequate although the refrigerating compressor is operating, the suction/refrigerating capacity and high pressure of the air conditioner should be checked (83-608).

Caution!
The air outlet temperature on the center nozzle must not be less than + 5 °C. If the value is not attained, check the resistance value of the temperature sensor evaporator and its supply cables (83-604 test step 3), renew temperature sensor if required, If no fault can be detected, renew control unit.

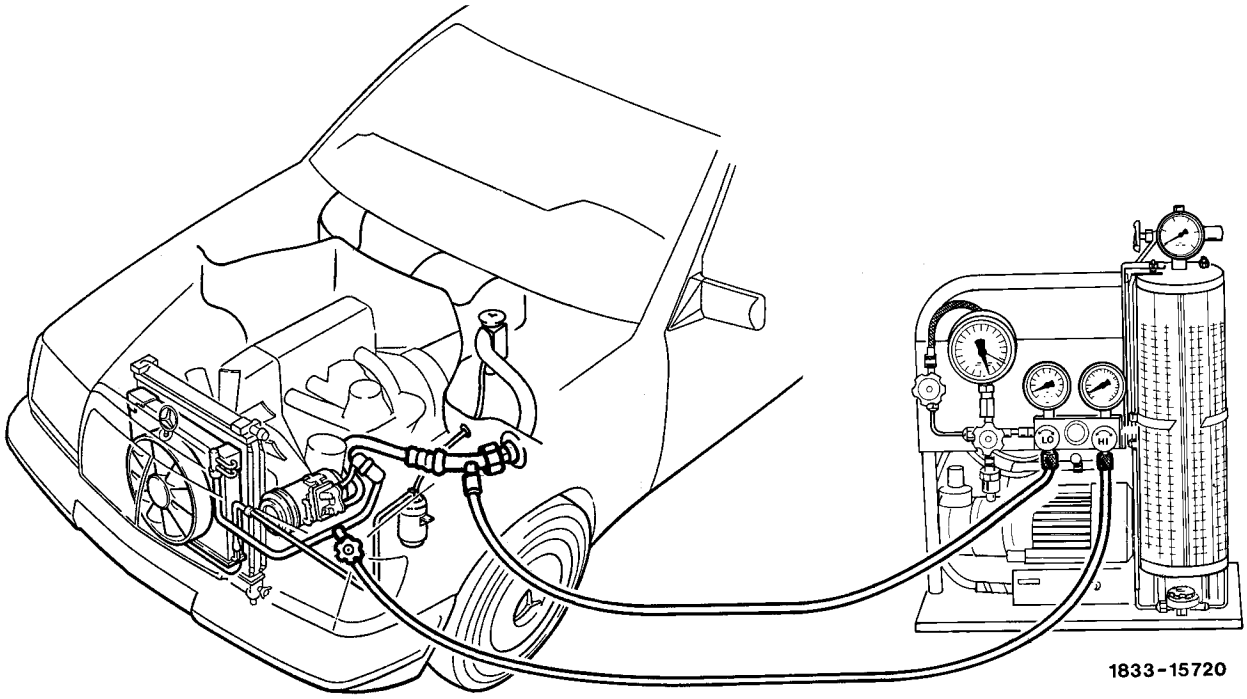

Test conditions	Observe items 1 to 4
Differential between coldest and warmest outlet temperature	Measured between switching off and switching on of the refrigerant compressor, max. 3 °C
Coldest air outlet temperature from center nozzle	Measures + 5 ± 1 °C with selector wheel position MIN engaged and function selection

Conventional tools

1 suction pressure gauge	or assembly tester	1 bar vacuum up to
1 high-pressure gauge		10 bar gauge pressure 0-40 bar gauge pressure
2 Thermometers		-20 °C to +70 °C
1 hygrometer		

Digital measuring instrument with 4 measuring probes

Robbi temp 90020
Air temperature measuring probe 90023
(4.5 m cable length)

Supplier, e.g.:
Switzerland: Kent-Moore (Europe) AG
P.O. Box, CH–6340 Baar
Germany: Kälte-Fischer
Postfach 266, Augsburgerstr. 289-291
D–70324 Stuttgart

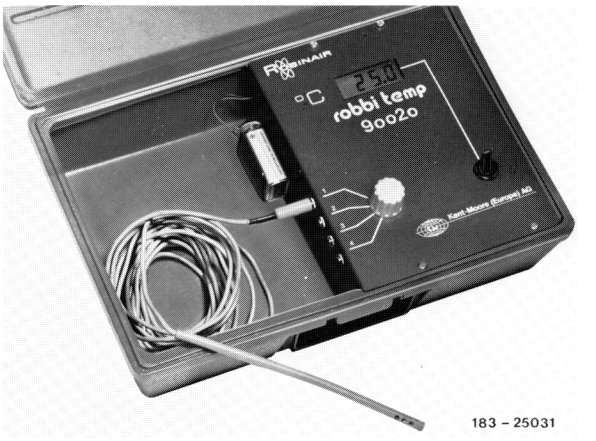

183 – 25031

Digital temperature measuring instrument with 4 measuring probes

Therm 2263-2
4-fold measuring point
changeover switch 2235-4
Air temperature measuring probe W453-5
(3 m cable length)

Supplier, e.g.:
Germany: Ahlborn Meß- und Regelungstechnik,
Eichenfeldstr. 1 - 3,
D–83607 Holzkirchen

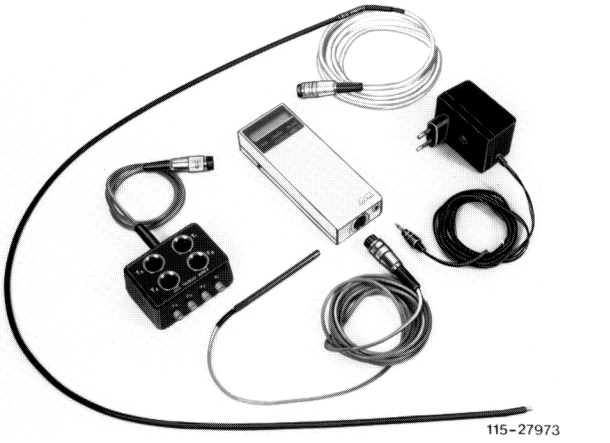
115-27973

Note
Carry out test when receiving complaints on the automatic climate control or for fault diagnosis.

Test conditions

1 The vehicle should not be exposed to the sun before and during the test.

2 Check tension of the poly-V-belt for the compressor drive.

3 Check auxiliary fan function by switching on the ignition and shorting the two flat terminals on the pressure switch (S32). The auxiliary fan should start running at the 1st speed.

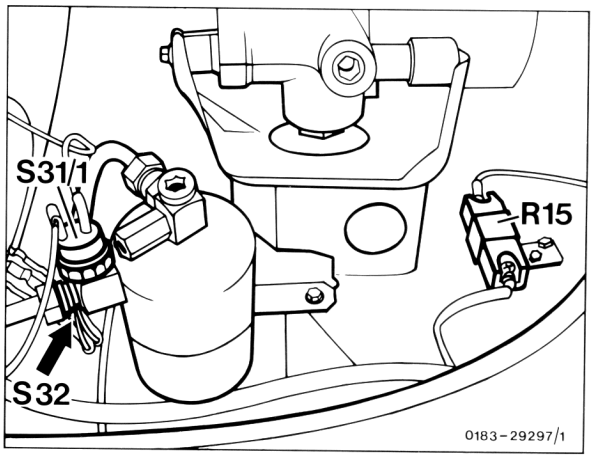

Then bridge the 2-pole coupling on the temperature switch (S25/4 or S25/5). The auxiliary fan 2nd speed should start up. Simultaneously observe the direction of rotation of the auxiliary fan (clockwise). On vehicles with 1-pole temperature switch (up to approx. 8/85), hold the 1-pole coupling to ground.

S25/4 Temperature switch 100/110 °C
Model 124.0 with 4-cylinder engine

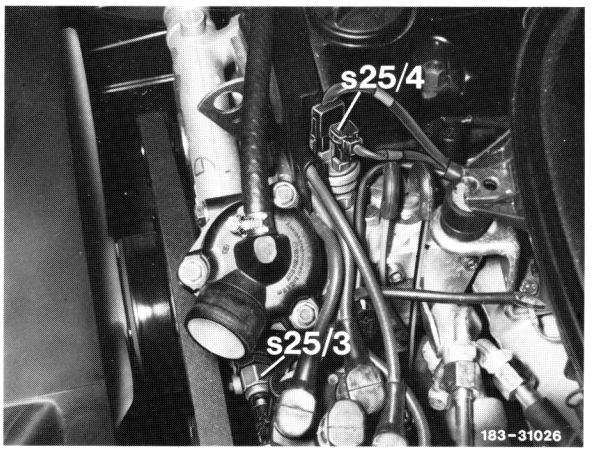

S25/5 Temperature switch 105/115 °C
Model 124.0/2 with 6-cylinder engine

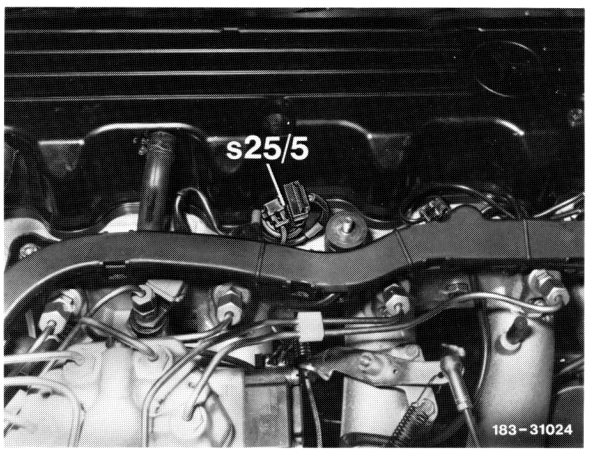

S25/4, S25/5 Temperature switch 100/110 °C
and 105/115 °C
Models 124.1/3

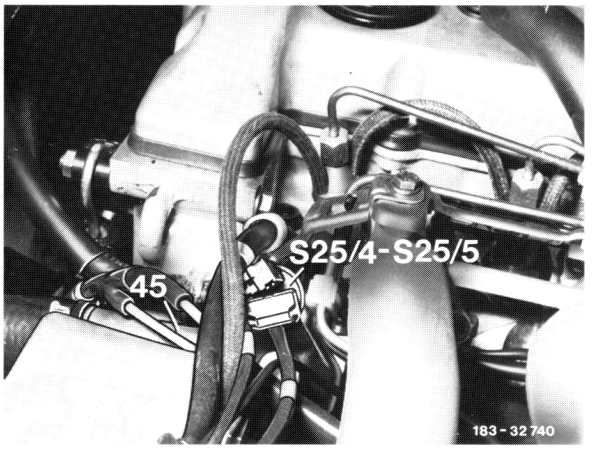

83.0742-608/3

4 Check fluid level in the air conditioner. To do so, pull off a cable on the pressure switch (S31/1), allow engine to run at idle speed (> 750/min) and switch on the automatic climate control with the function selection . Clean the sight glass (arrow) in the fluid reservoir. Observe sight glass and reconnect the cable to pressure switch (S31/1) at the same time. Shortly before the electromagnetic coupling is switched on, the refrigerant should rise and subsequently flow through without bubbles (i.e. refrigerant no longer visible).

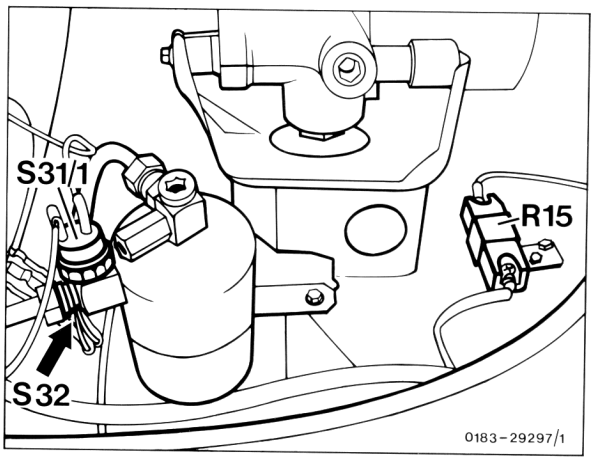

Caution!
At major refrigerant loss, or empty system, the voltage for the refrigerant compressor is interrupted by the pressure switch (S31/1). The circuit is closed again when the pressure rises to 0.6 bar above the switch-off pressure.

Note
If the refrigerant compressor does not switch on, bridge the cables from the pressure switch S31/1) and check fluid level according to item 4. If the refrigerant compressor does not switch on still, check the compressor cut-out (83-605) or the activation of the compressor (83-604, test steps 1 to 5 and 21).

Checking

1 Engage temperature selector wheel (A) in "MIN".

2 On the pushbutton switch (b), switch on the function selection and on the blower switch (c) the function selection .

3 Open the center and lateral nozzles and switch off switch (S24) (fresh air).

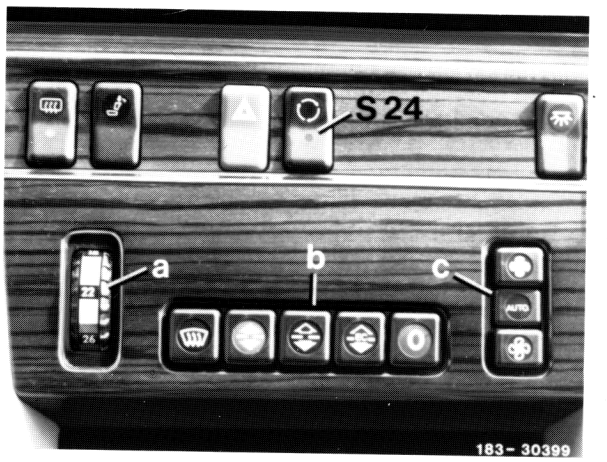

83.0742-6084

4 Insert a thermometer (arrow) into the left or right center nozzle.

5 Provide a thermometer for ambient temperature (room temperature) approx. 2 m from the driver's side at the outside of the vehicle.

6 Place a hygrometer into the tray of the center console.

7 Remove caps (1). Then connect hose pipes to the suction pressure or high-pressure gauges on the service valves. Ensure that the connection fittings of the hose pipes are provided with a pressure pin in the center.

1 Cap on suction pipe

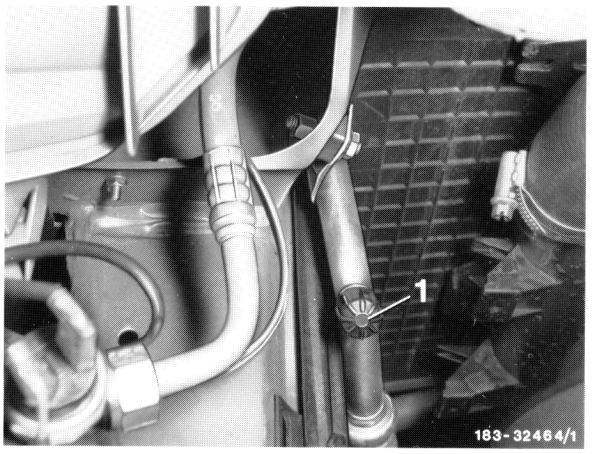

1 Cap on pressure pipe

8 Open windows and close vehicle doors.

9 On vehicles with 4-cylinder engine, pull off 2-pole coupling from temperature switch 100/110 °C (S25/4) and bridge so that the electromagnetic coupling of the engine fan runs during the entire test.

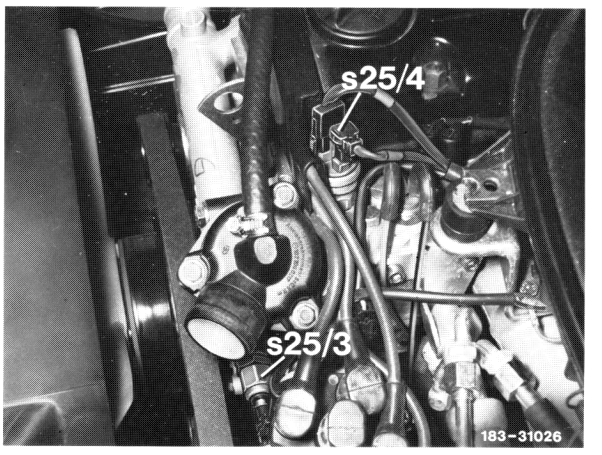

S25/4 Temperature switch 100/110 °C
Engine 102 up to 08/89

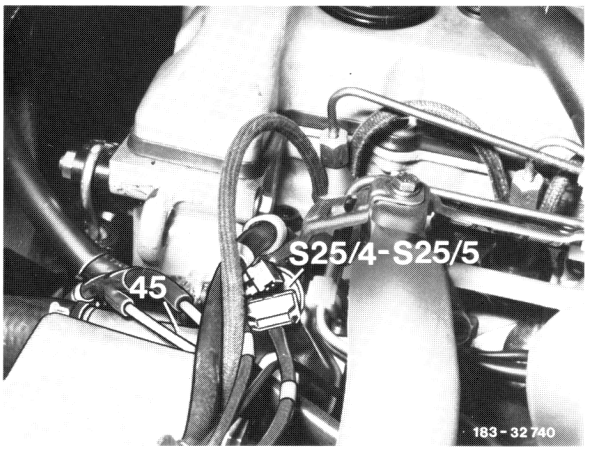

25/4 Temperature switch 100/110 °C
Engine 601

10 Run engine with approx. 2000/min.

11 After approx. 10 minutes of operating time, read values of the thermometers and pressure gauges as well as the hygrometer.

Note
The specified values, refer to the diagram, are maximum values and may not be exceeded.

Possible causes if the values deviate from the specifications:

a) Suction/high pressure
- Suction pressure too low and high pressure too high: Expansion valve defective, fluid reservoir or condenser or evaporator clogged.
- Suction pressure too high and high pressure too low: Expansion valve defective.
- Suction and high pressure identical: Refrigerant compressor defective.

b) Temperature
Outlet temperature too low or too high: Temperature sensor evaporator faulty or the supply cables are interrupted or shorted to ground (check according to 83-604, test step 3) or control unit defective.

Diagram for model 124.0/2

1) Relative humidity of the air
Ta Outside temperature (°C)
A Air outlet temperature (°C)
B Pressure before the compressor (bar)
C Pressure after the compressor (bar)
D Coolant temperature (°C)

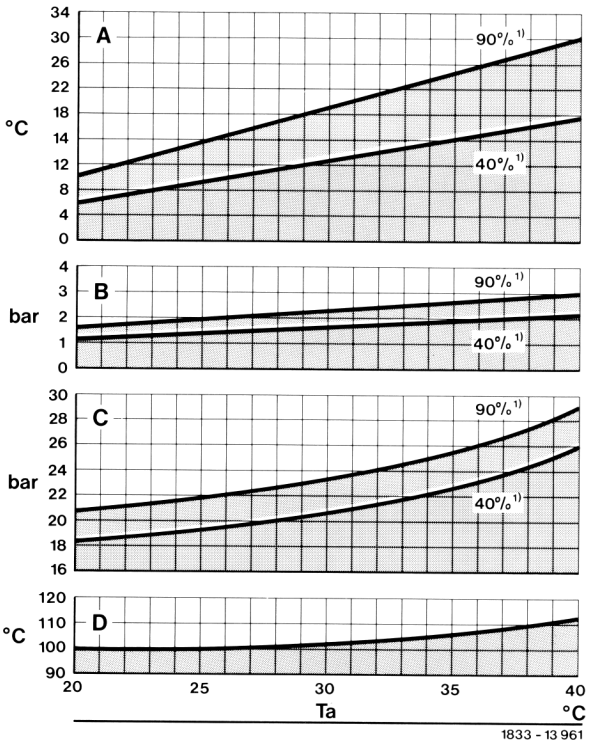

Diagram for model 124.1/3

1) Relative humidity of the air
Ta Outside temperature (°C)
A Air outlet temperature (°C)
B Pressure before the compressor (bar)
C Pressure after the compressor (bar)
D Coolant temperature (°C)

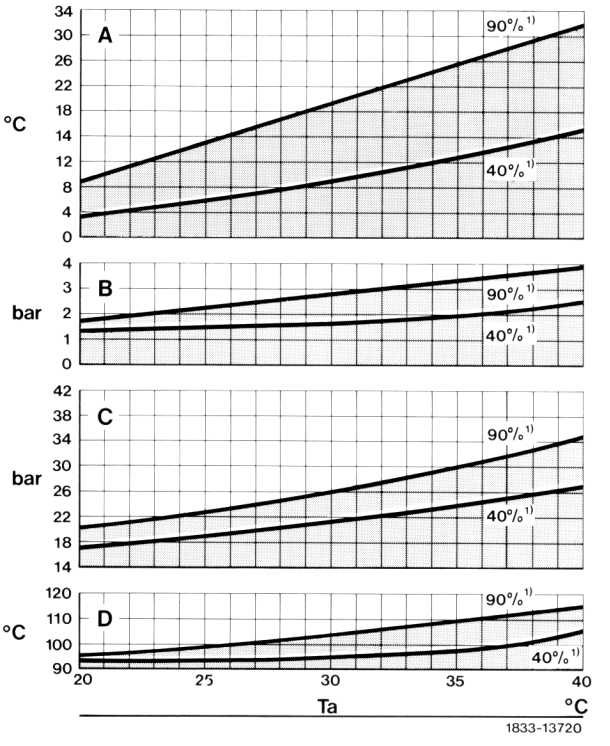

12 Remove hose pipes from the service valves and again close the service valves with the caps.

13 On vehicles with 4-cylinder engine, reconnect 2-pole coupling to the temperature switch 100/110 °C (S25/4)

14 Remove thermometer and hygrometer from the vehicle.

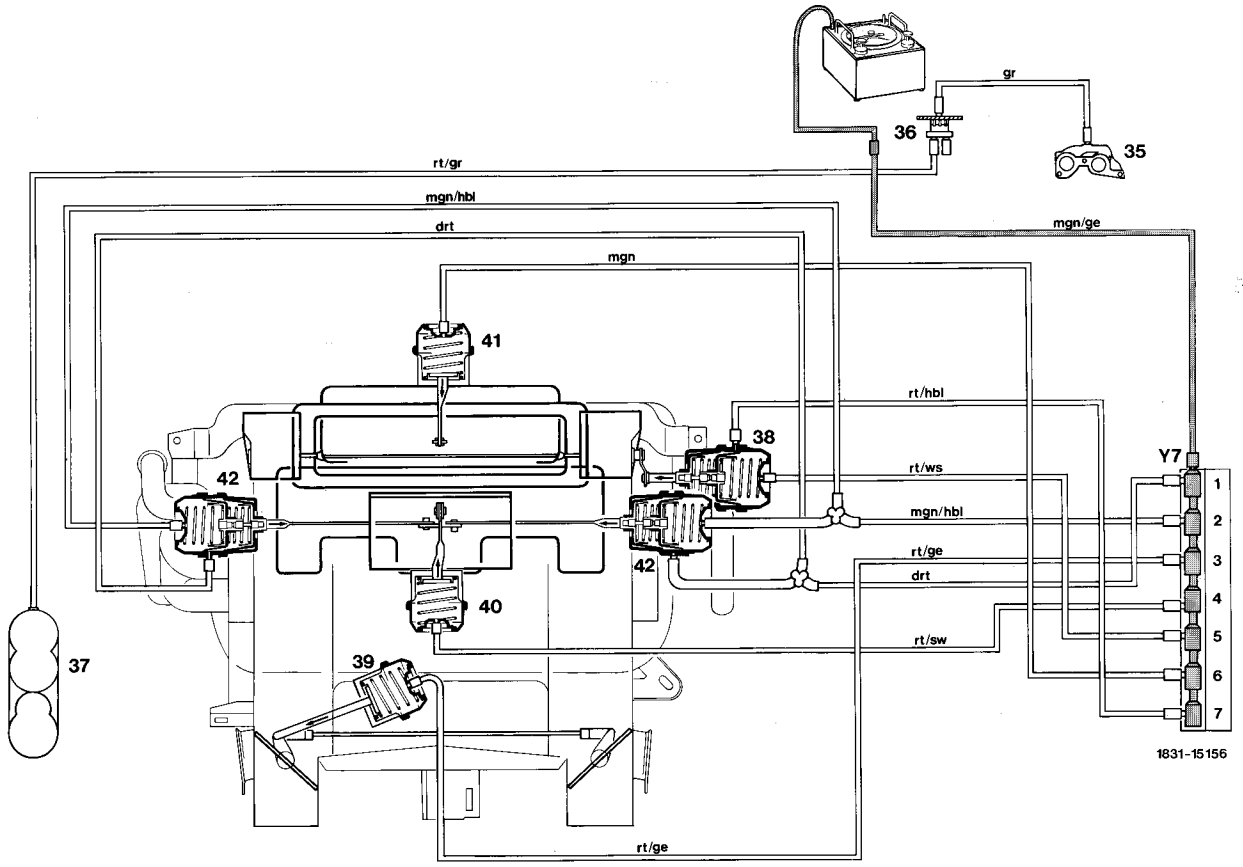

Check valve (36) and vacuum reservoir (37, except diesel)	Check for leaks, section A
Test B to E	Prepare
Vacuum circuit 1, valve block (Y7)	Check for leaks, section B with function selection
Vacuum circuit 2, vacuum element for fresh/recirculated air flap (42)	Check for leaks, section C with function selection 0
Vacuum circuit 3, vacuum element for footwell flaps (39)	Check for leaks, section D with function selection and selector wheel MAX
Vacuum circuit 4, vacuum element for center nozzle flap (40) for diverter air flap (41) and for defroster nozzle flaps (38)	Check for leaks, section E with function selection and selector wheel MIN

Permissible leakage rate

Permissible leakage rate per vacuum circuit (without vacuum reservoir)	30 mbar/min at 400 mbar vacuum
Permissible leakage rate of the check valve	50 mbar in 10 minutes with 300 mbar vacuum
Permissible leakage rate of the remaining components	20 mbar/min with 300 mbar vacuum

Special tool

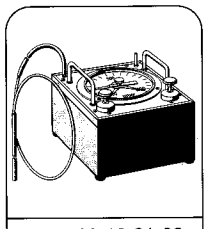

201 589 13 21 00

Self-made tool

1 plug	000 987 11 45

Note

The vacuum test has been divided into 5 test circuits (A to E). If a certain fault is experienced (e.g. footwell flaps fail to open), the appropriate circuit can be checked first.

If a leak is suspected in the entire vacuum system for the automatic climate control, the test should commence with step "A" and continue with the other test circuits until the faulty vacuum circuit has been found.

A. Checking check valve (36) and vacuum reservoir (37) for leaks (except with diesel engine)

1 Loosen check valve holder.

2 Disconnect vacuum line medium green/yellow and on the gasoline models, additionally vacuum line red/green, from the check valve (36).

3 Connect tester (arrow) to the check valve. On the gasoline models, close the second connection with the dummy plug.

4 Evacuate with the tester and read the vacuum of the gauge. If the pressure rises on the pressure gauge, renew check valve.

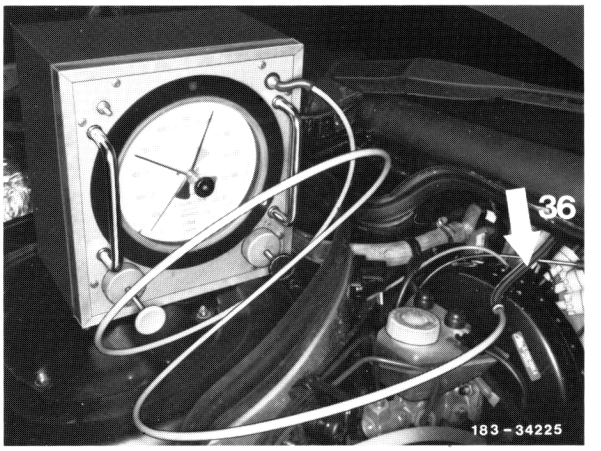

5 Pull off vacuum line red/grey from the check valve (36) and connect tester (arrow) to the vacuum line (not with the diesel).

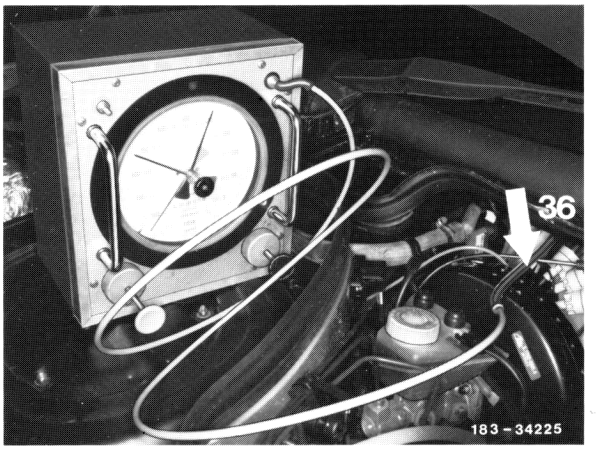

6 Evacuate with the tester and read the pressure of the gauge.

7 If the pressure gauge indication changes, remove the reservoir (37) and check for leaks, renew if required or renew vacuum line red/grey.

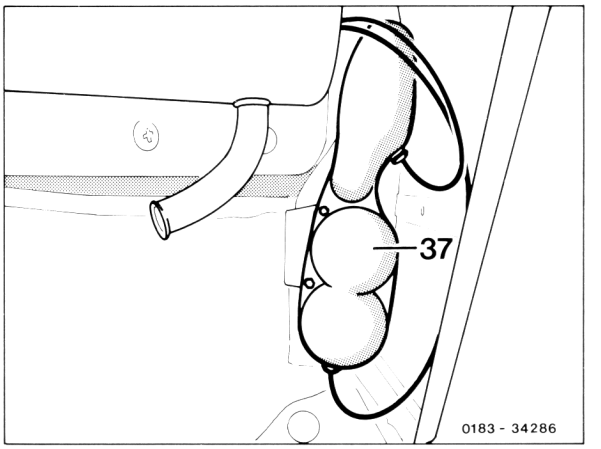

Arrangement, vacuum reservoir (37) under front fender left (only gasoline models)

83.0742-6213

Preparing test B to E

1 Pull vacuum line medium green/yellow off check valve (36) and connect tester to the vacuum line.

2 Switch on ignition.

Note
The tester remains connected to the vacuum line medium green/yellow during the entire test.

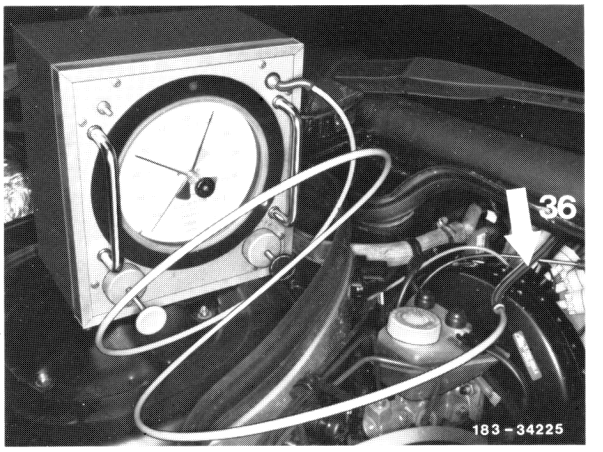

B. Checking vacuum circuit 1, valve block (Y7) for leaks

1 Press the function selection button on the control unit.

2 Evacuate with the tester (approx. 400 mbar) and read off the pressure gauge.

3 If the indication on the pressure gauge changes, check switchover valve block (Y7) and vacuum line medium green/yellow, renew if required.

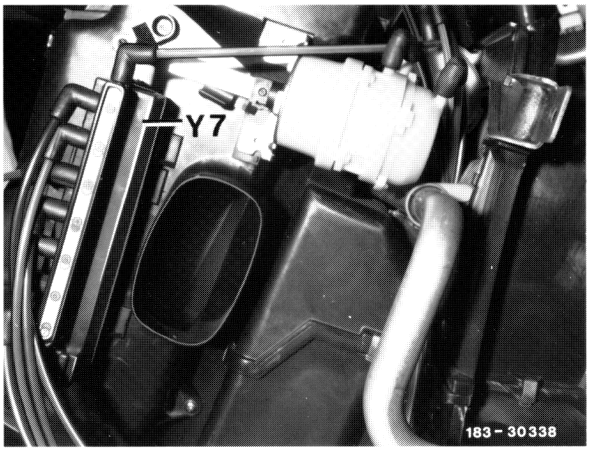

C. Checking vacuum circuit 2, vacuum elements for fresh/recirculated air flap (42) for leaks.

1 Press function selection button **0** on the control unit.

2 Evacuate with the tester (approx. 400 mbar) and read off the pressure gauge.

3 If the indication on the pressure gauge changes, individually check the vacuum elements (42), renew if required (83-665, section "E") or check vacuum lines medium green/light blue and dark red, renew if necessary.

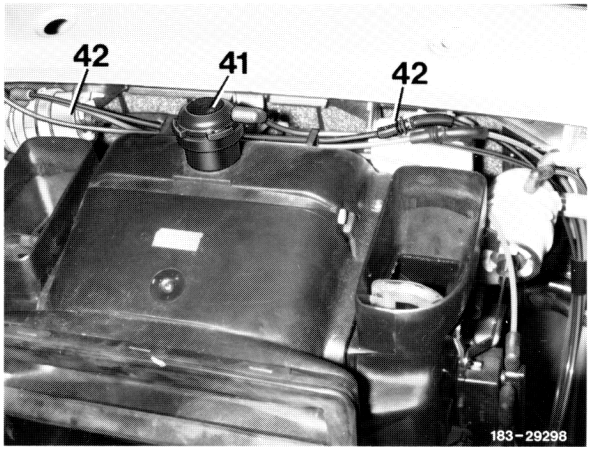

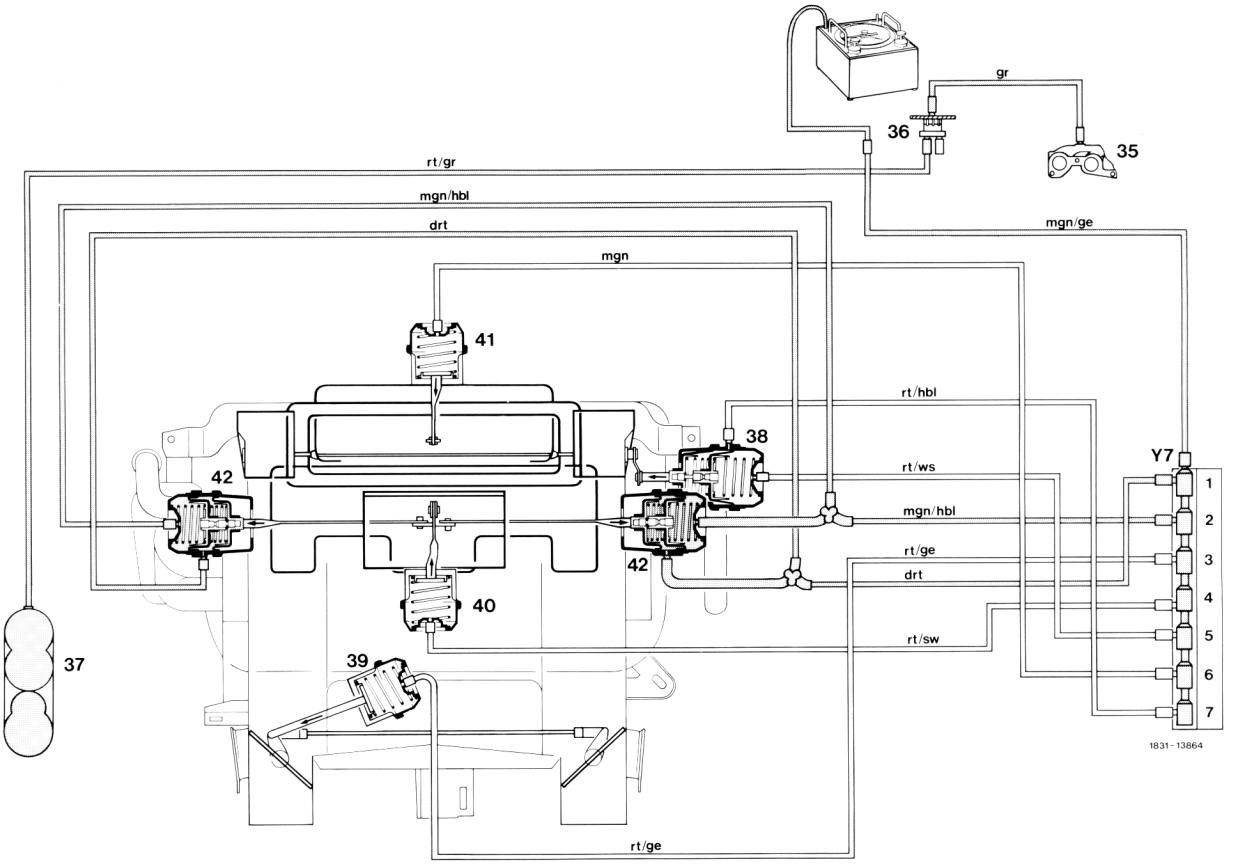

Vacuum circuit 2, function selection **0**

42 Vacuum element for fresh/recirculated air flap

D. Checking vacuum circuit 3, vacuum element for footwell flaps (39) for leaks

1 Press function selection button on the control unit and engage temperature selector wheel in position "MAX".

2 Evacuate with the tester (approx. 400 mbar) and read off the pressure gauge.

3 If the indication on the pressure gauge changes, directly check the vacuum element (39), renew if required (83-665, section "A") or check vacuum line red/yellow, renew if required.

Note
Up to 08/86, two vacuum elements for footwell flaps have been installed.

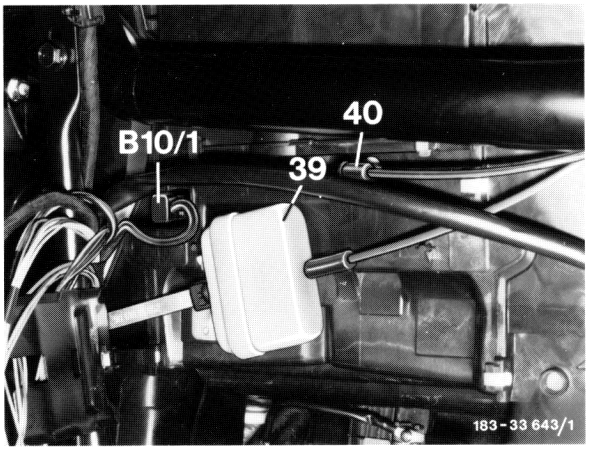

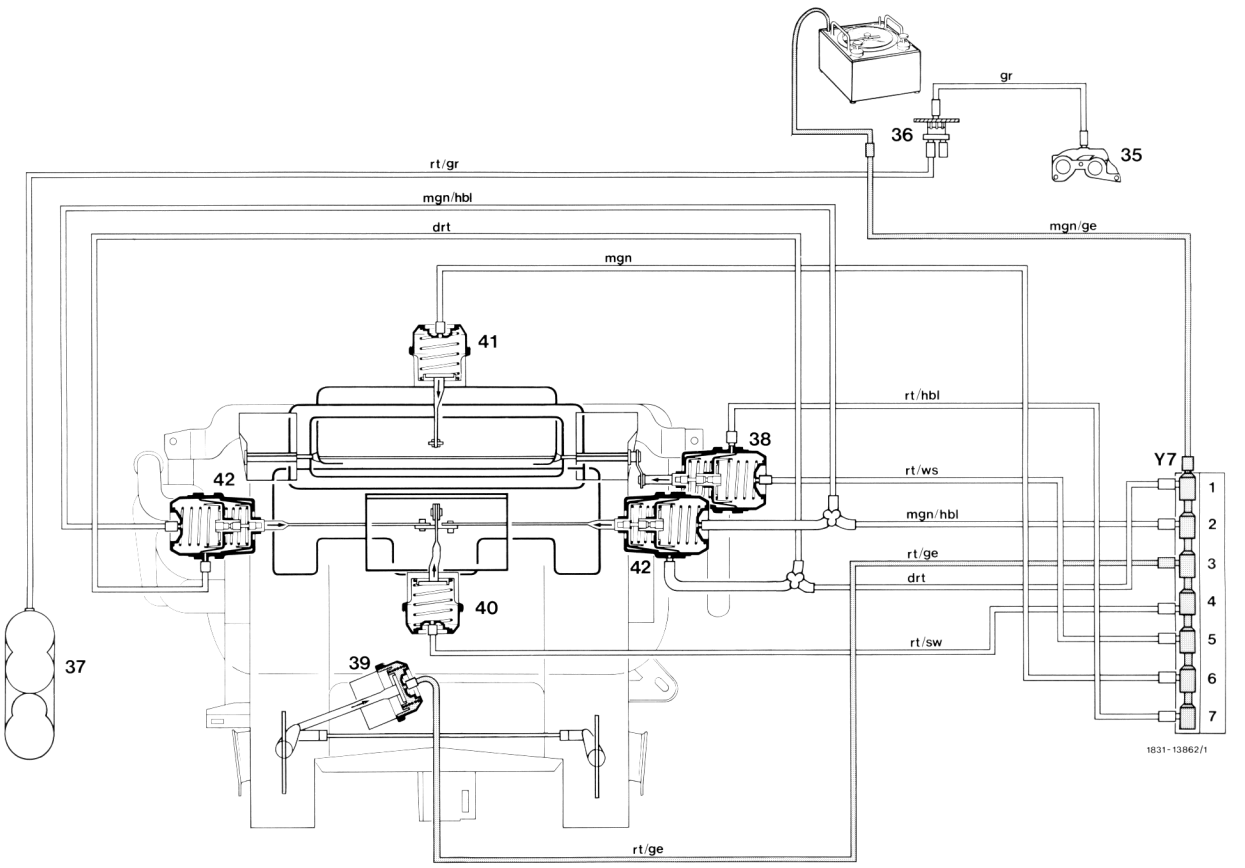

Vacuum circuit 3, function selection and temperature selector wheel engaged in "MAX"

39 Vacuum element for footwell flaps

83.0742-620/6

E. Checking vacuum circuit 4, vacuum elements for defroster nozzle flaps (38), center nozzle flap (40) and diverter air flap (4l) for leaks

1 Press the function selection button on the control unit and engage the temperature selector wheel in "MIN".

2 Evacuate with the tester (approx. 400 mbar) and read off pressure gauge.

3 If the pressure gauge indication changes, individually check the vacuum elements (38, 40 and 41), renew if required (83-665, section "A", "C" or "D") or check vacuum lines red/white, red/light blue, medium green and red/black, renew if required.

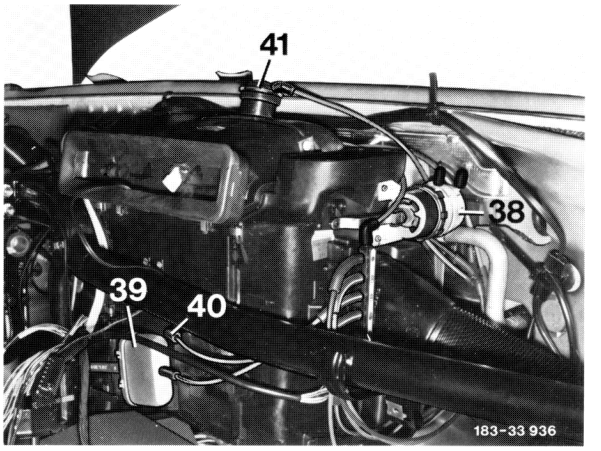

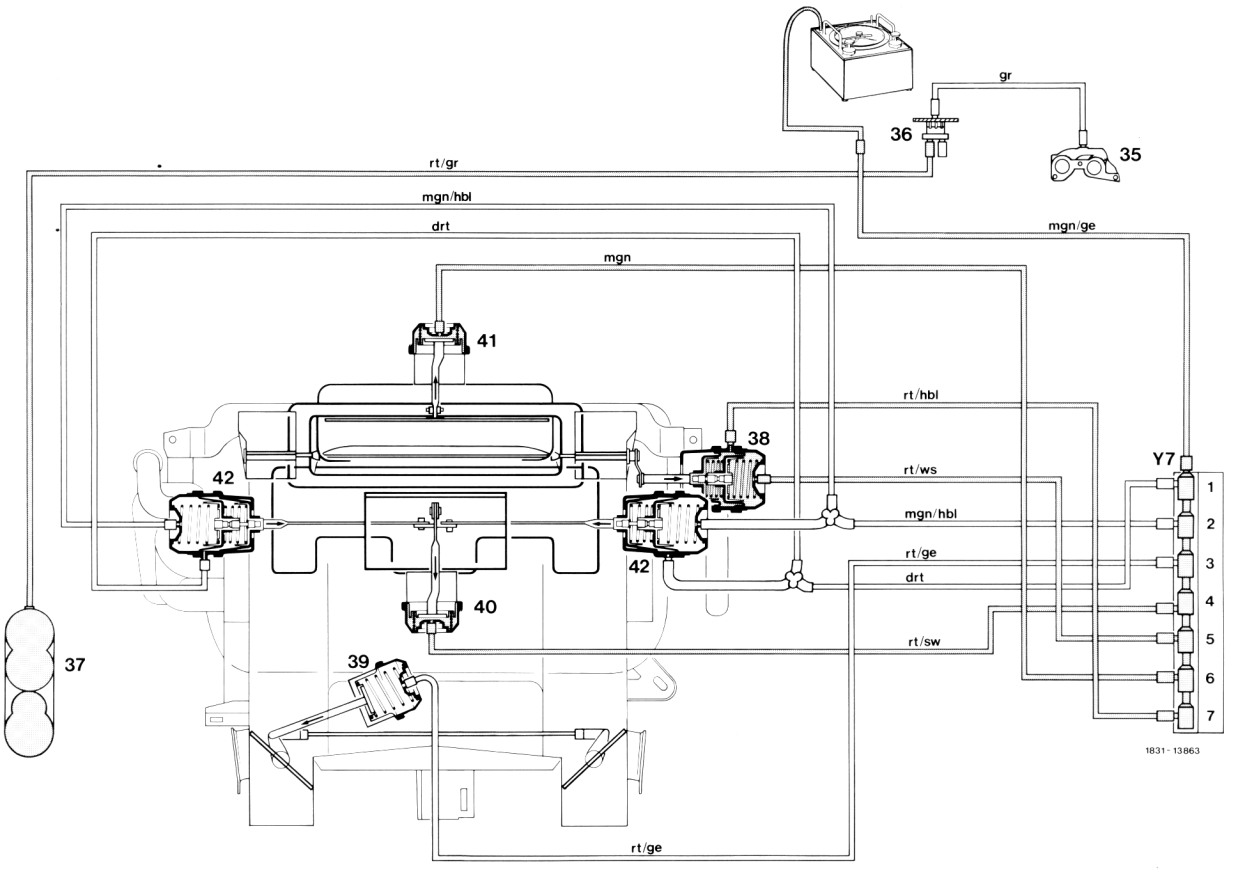

Vacuum circuit 4, function selection and temperature selector wheel engaged in "MIN"

38 Vacuum element for defroster nozzle flap
40 Vacuum element for center nozzle flap
41 Vacuum element for diverter air flap

83.0742-620/7

A. Up to approx. 05/90

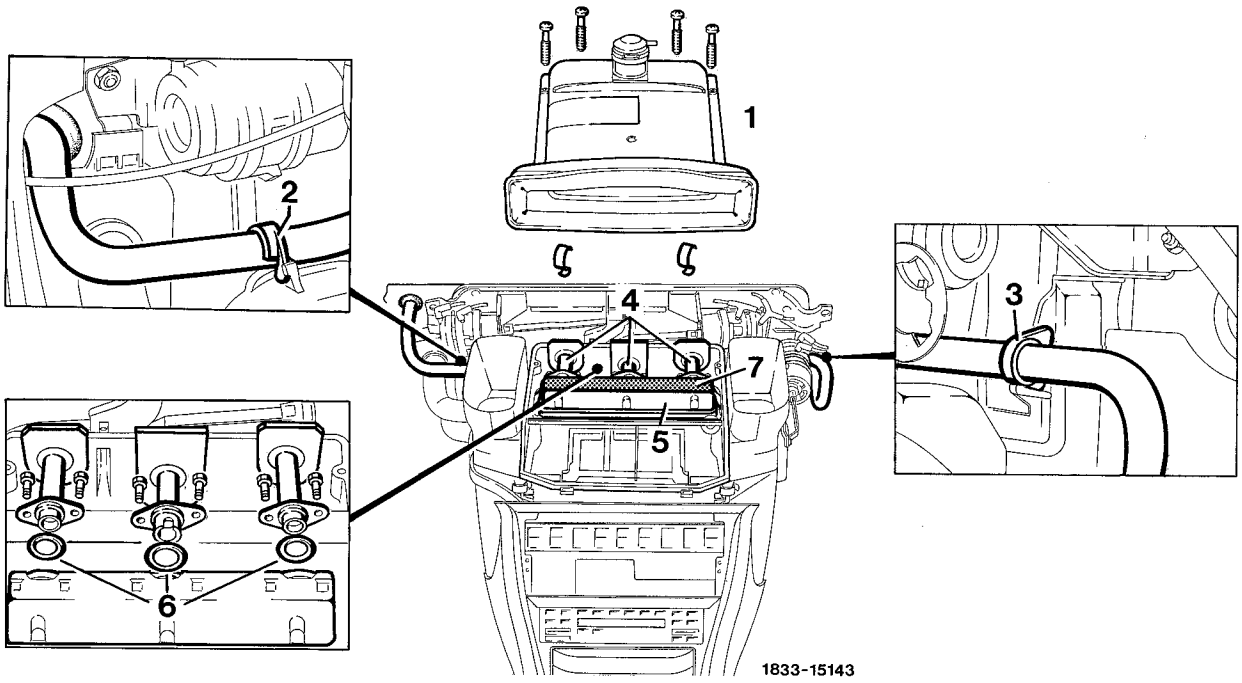

Battery	Disconnect
Coolant	Drain (20-010)
Supply and return hose	Disconnect and blow out residual coolant from the heat exchanger by means of compressed air
Instrument panel	Remove (68-100)
Cover (1)	Remove, 4 screws and 2 clips
Clamp (2)	Unclip
Clamp (3)	Unclip
3 pipes (4) on the heat exchanger	Disconnect and pull out of the heat exchanger
Heat exchanger (5)	Pull out upwards
Foam rubber strip (7) on the new heat exchanger	Glue on
In reverse order	Install
Sealing rings (6)	Renew 3

Installation instruction

After filling in the coolant, check cooling system for leaks.

B. As of 06/90

as of vehicle ident. no. Sindelfingen-prod.: 249 838
as of vehicle ident. no. Bremen-prod.: 146 108

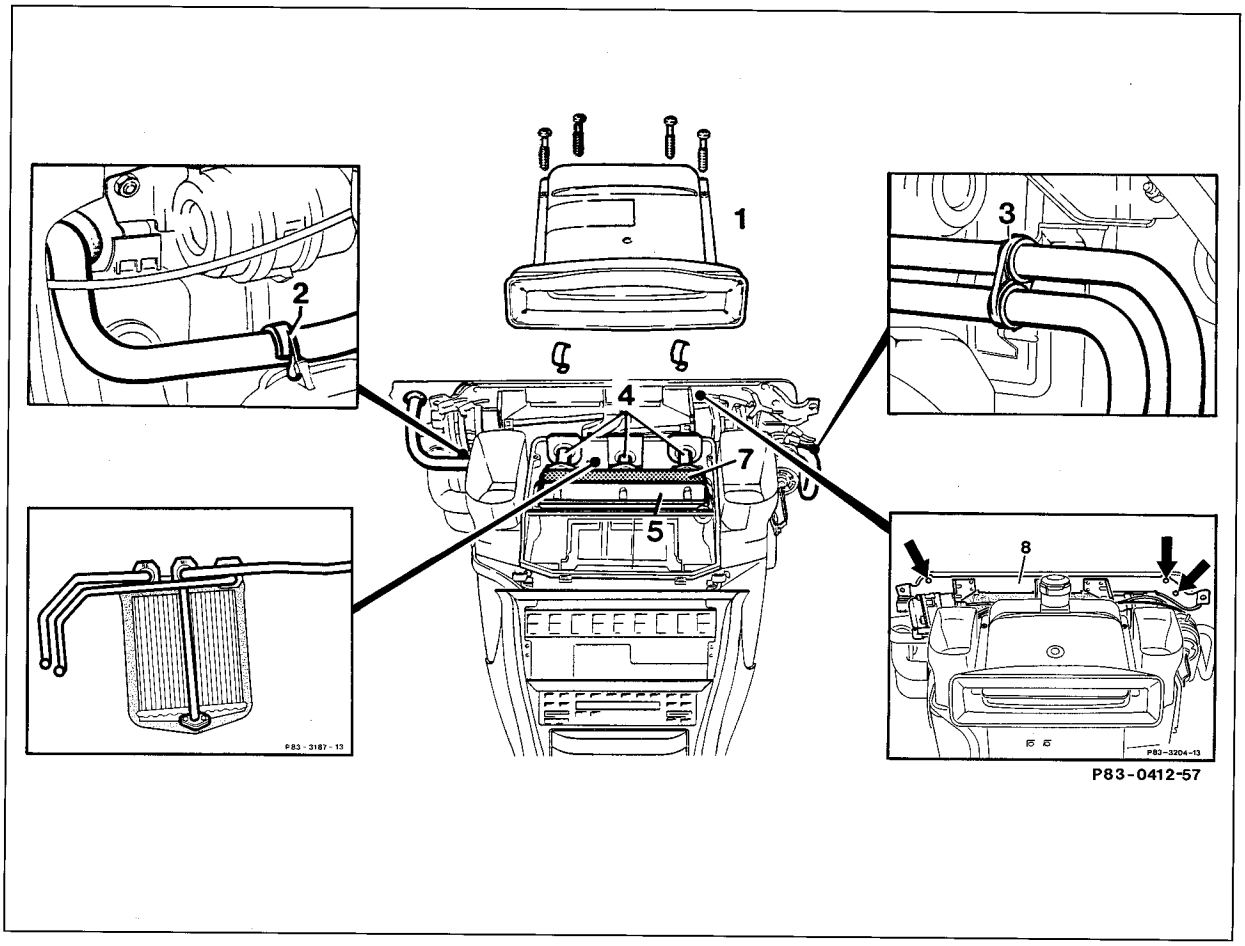

Battery	Disconnect negative pole
Coolant	Drain (20-010)
Supply and return hose	Seal off, blow out remaining coolant with compressed air.
Heater box (air conditioner)	Remove (83-100)
Carrier for vacuum elements (8)	Unscrew (3 screws). Unclip operating linkage for main air flap (arrow).

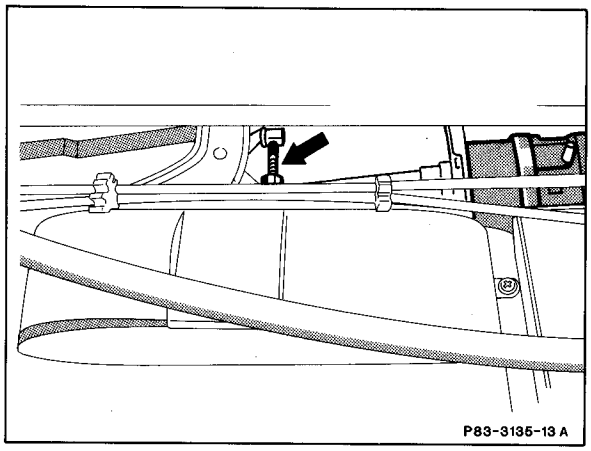

Cover (1)	Remove, 4 bolts and 2 clips.
Clip (2)	Unclip.
Clip (3)	Unclip.
Heat exchanger (5)	Withdraw upwards together with pipes (4). Clean the housing from the inside or remove any coolant which has escaped.
3 pipes (4) on heat exchanger	Disconnect.
In reverse sequence	Install.
Sealing rings	Replace, 3 off.

Installation notes

After filling the cooling system with coolant, check for leaks.

A. Up to 11/92

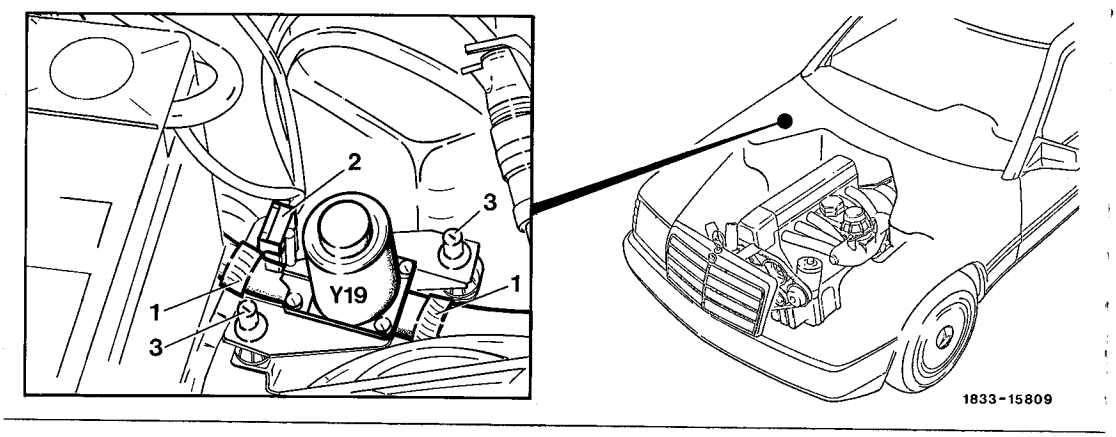

Depressurize the cooling system with the radiator cap	Open
Hose clamps (I)	Loosen
Both hoses	Pull off
Coupling (2)	Pull off
Mono valve (Y19) from rubber buffer (3)	Push out
In reverse order	Install

Installation instruction

Before pressing on the coupling (2), check the two sleeves for contact, correct by bending if required. After filling in the coolant, check cooling system for leaks.

B. As of 12/92

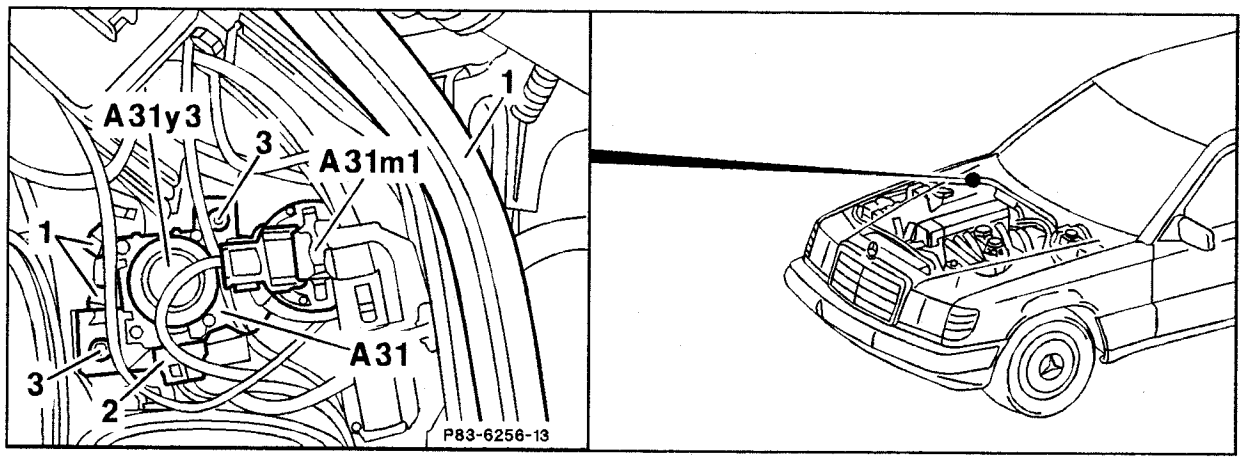

Relieve pressure in cooling system, to do this

Radiator cap	Open
Hose straps	Loosen
Hoses	Pull off
Coupling (2)	Pull off
Mono valve (Y19)	Press out of rubber buffer (3)
In reverse sequence	Install

Installation note

Before pressing on the coupling (2), check the two sleeves for contacting and bend, if necessary.
After pouring in the coolant, check the cooling system for leaks.

83-630 Removal and installation of heating water circulating pump (M13 or A31m1)

A. Up to 11/92

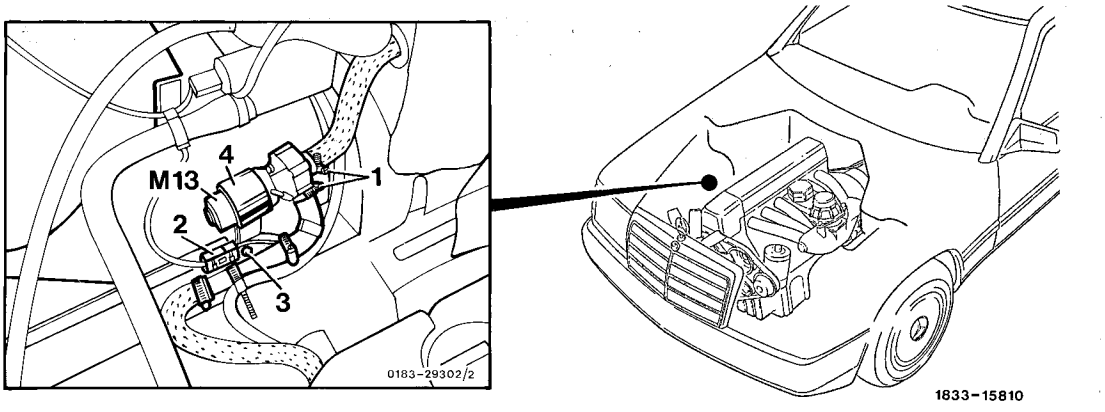

Coolant	Drain
Hose clamps (1)	Loosen
Both hoses	Pull off
Electrical connection (2)	Disconnect
Screw (3)	Unscrew
Circulating pump (M13) from bracket (4)	Pull out
In reverse order	Install

Installation instruction

After filling in the coolant, check the cooling system for leaks. After this, check function of circulating pump, switch on ignition and DEF-button and feel the circulating pump operation with the hand.

B. As of 12/92

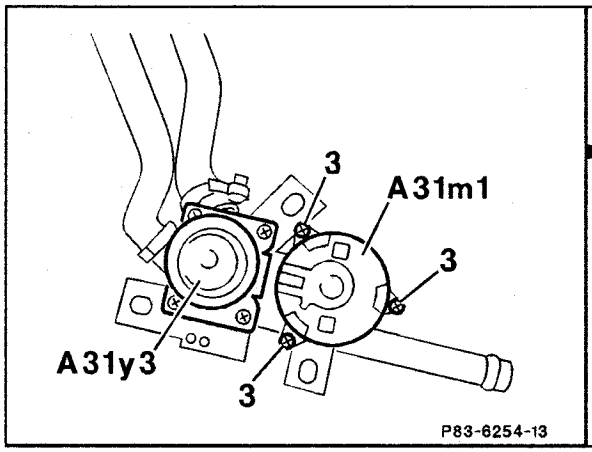

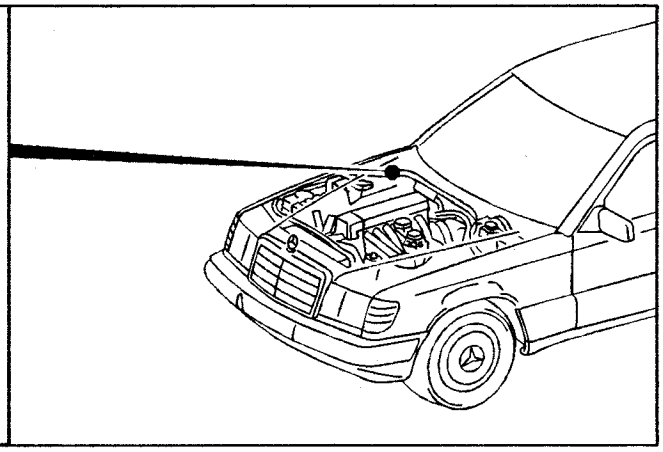

Relieve pressure in cooling system	Open.
Hoses	Disconnect.
Electrical plug connection	Separate.
Bolts (3)	Unscrew.
Circulating pump (A31m1)	Remove.
In reverse sequence	Install.

Installation instructions

After filling with coolant, check the cooling system for leakage. Finally check the circulating pump for operation, switch on ignition and DEF button and fasten circulating pump.

A. Removal and installation

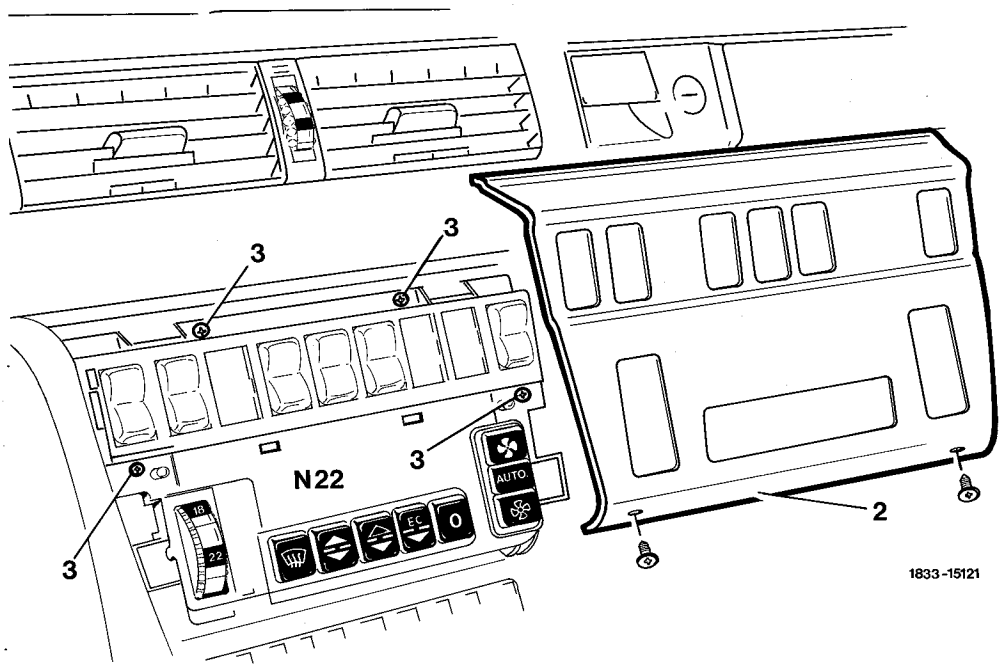

Cover (2)	Remove
Screws (3)	Unscrew
Control unit (N22)	Pull out and disconnect both couplings
In reverse order	Install

Installation instruction

Before pressing on the two couplings, check all sleeves for proper contact, correct by bending if required.

B. Renewing lighting bulbs

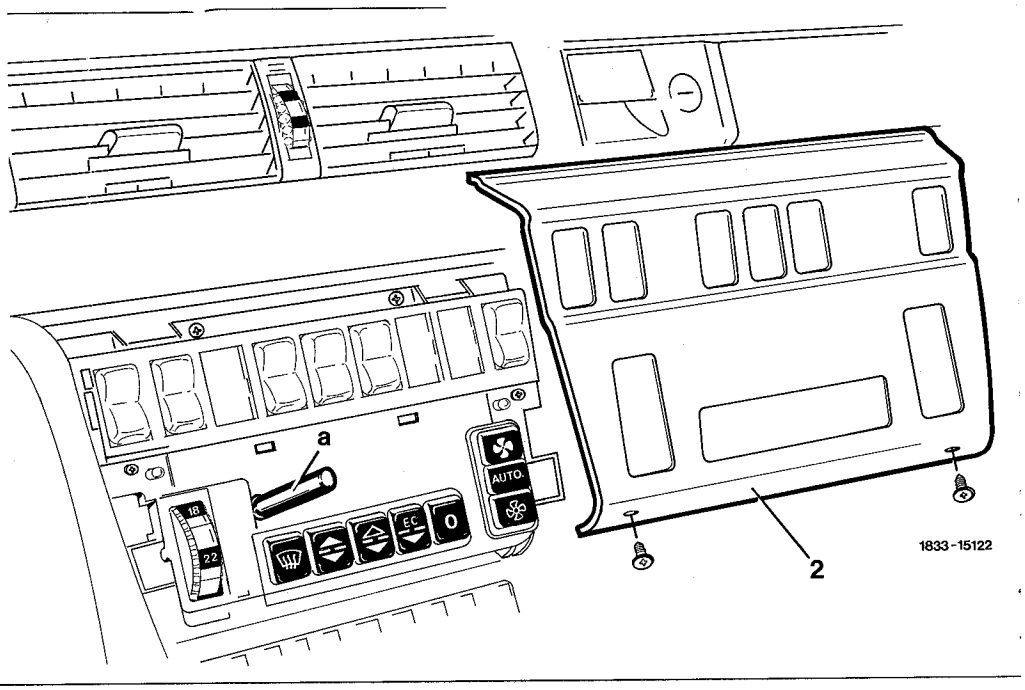

Cover (2)	remove
Put a piece of conduit (a, 5 mm dia.) over the bulb	and pull out bulb

C. Removal and installation of temperature selector wheel (without potentiometer)

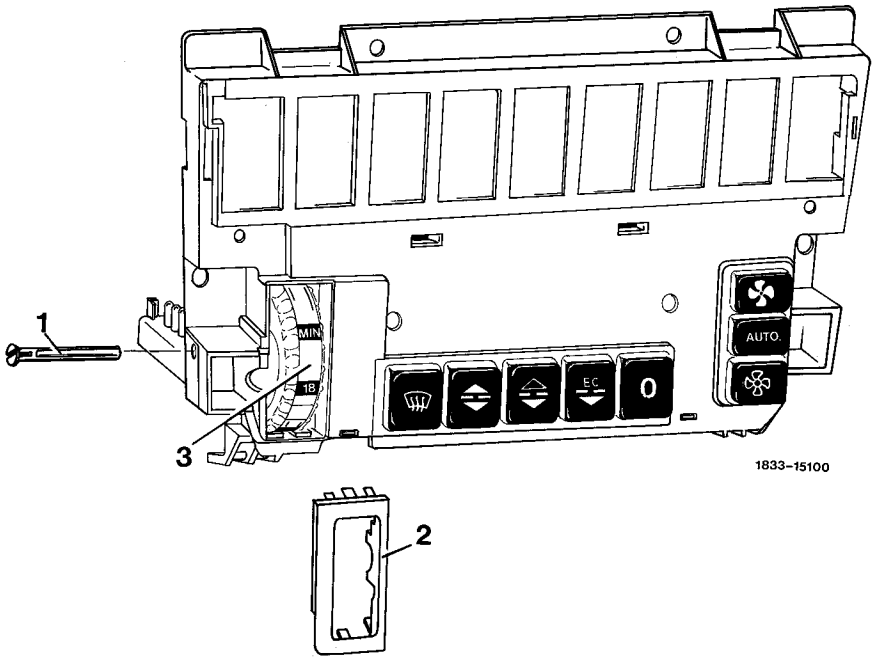

Control unit	Remove (see section A)
Temperature selector wheel (3)	Set between "MIN" and 18°C and pull out drive pin (1)
Frame (2)	Unclip in a forward direction
Install in reverse order	While inserting the temperature selector wheel (3) into the control unit in position "MIN" to 18°C

83.0742-0635/3

83-637 Removal and installation of aspirator blower (M9) for temperature sensor interior air

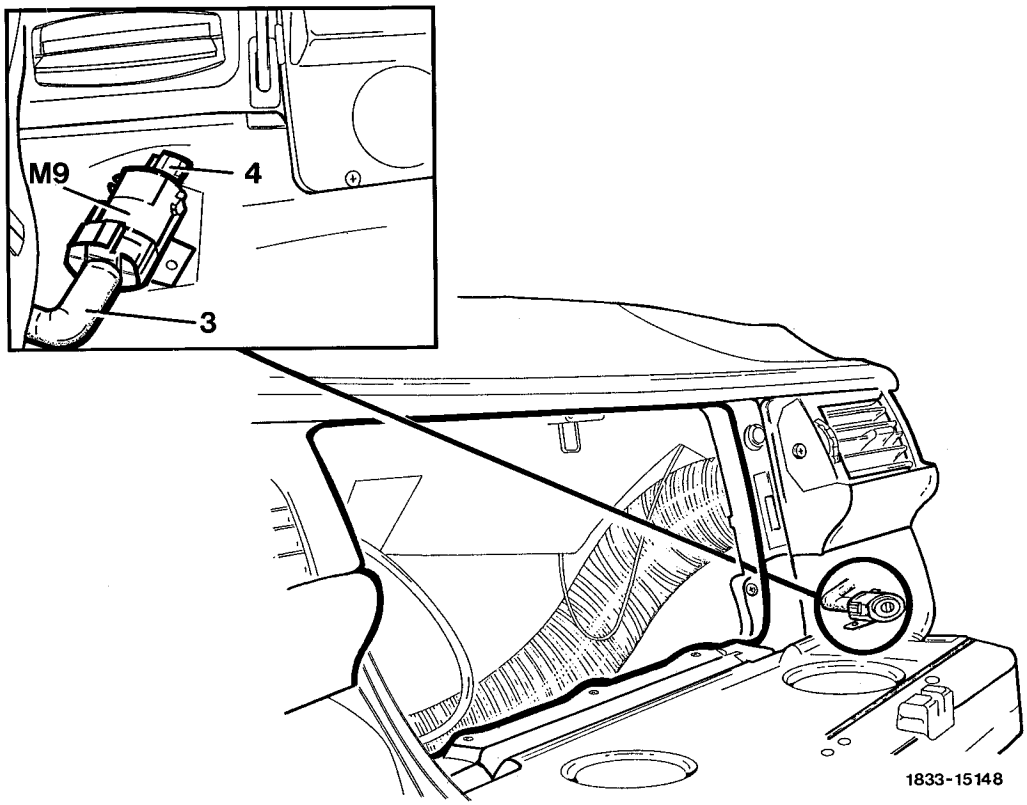

Glove box	Remove
Ventilation blower (M9)	Unclip from the holder, pull off hose (3) and 2-pole coupling (4)
In reverse order	Install
Function	Check by switching on the ignition and placing a piece of paper (approx. 1 cm^2) onto the grid of the temperature sensor interior air. The paper must stay in position.

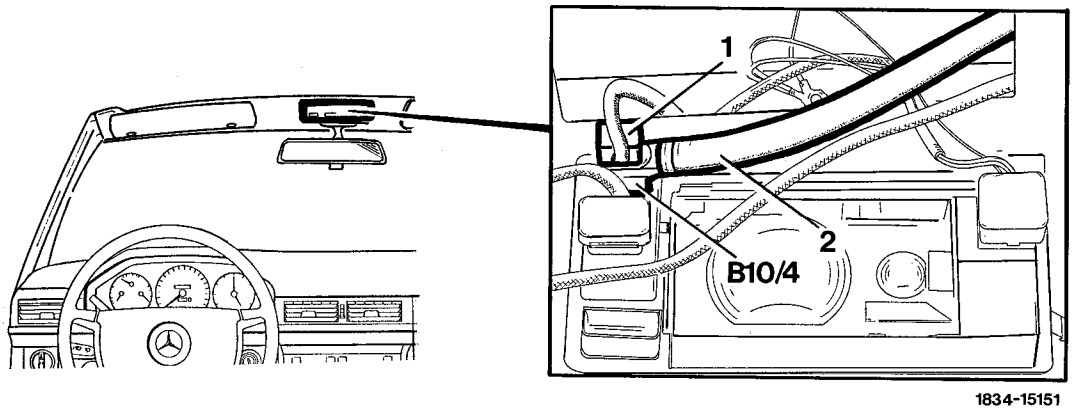

Dome lamp	Pull out at left side
2-pole coupling (1) and ventilation hose (2)	Pull off
Temperature sensor interior air (B10/4)	Press off
In reverse order	Install
Automatic climate control	Check

Test values

Sensor temperature in °C	Resistance in kΩ
+10	18.2 to 21.5
+15	15.3 to 17.2
+20	11.5 to 13.5
+25	9.5 to 10.5
+30	7.5 to 8.5
+35	6.0 to 7.0
+40	4.5 to 5.5
+45	3.5 to 4.5

Conventional tester

Multimeter	e.g. SUN, DMM 5

83-645 Removal and installation, testing of temperature sensor heat exchanger

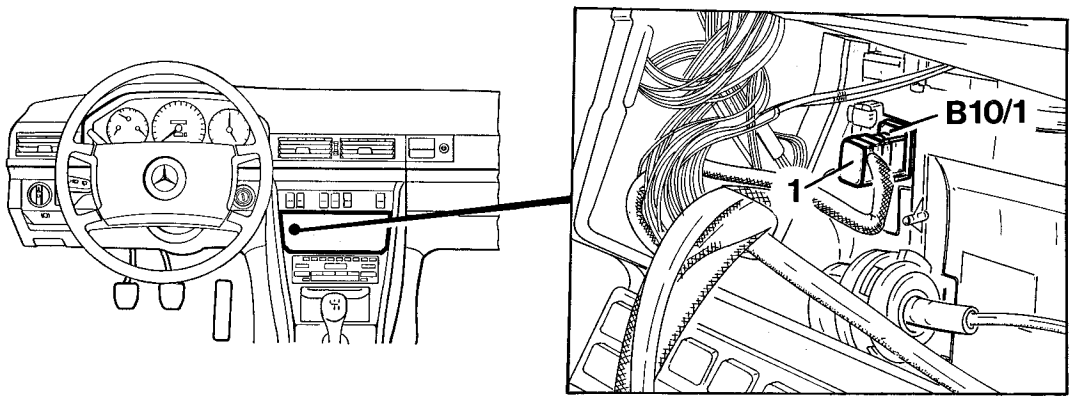

1833-15149

Control unit	Remove (83-635)
2-pole coupling (1)	Pull off
Temperature sensor heat exchanger (B10/1)	Pull out
Temperature sensor	Check, renew if required
In reverse order	Install
Automatic climate control	Check

Test values

Sensor temperature in °C	Resistance in kΩ
+10	18.2 to 21.5
+15	15.3 to 17.2
+20	11.5 to 13.5
+25	9.5 to 10.5
+30	7.5 to 8.5
+35	6.0 to 7.0
+40	4.5 to 5.5
+45	3.5 to 4.5

Conventional tester

Multimeter	e.g. SUN, DMM 5

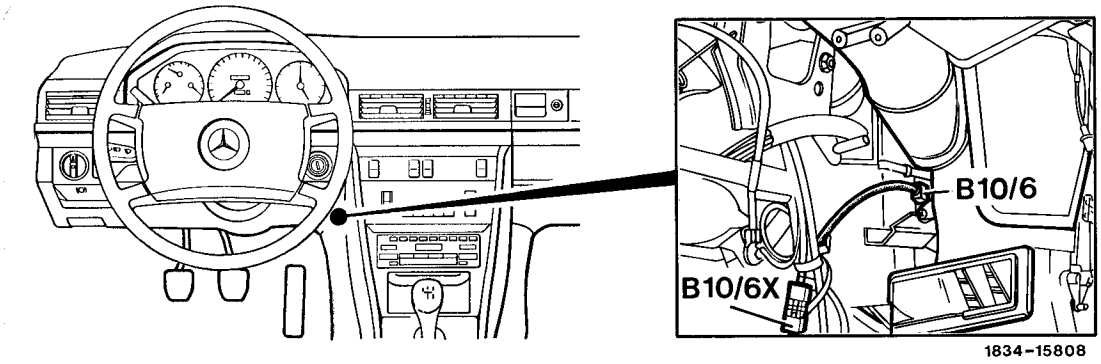

Covering below the instrument panel left	Remove
Cable strap	Loosen
2-pole plug connection (B10/6x)	Disconnect
Temperature sensor evaporator (B10/6)	Pull out
Temperature sensor	Check, renew if required
In reverse order	Install
Refrigeration capacity	Check (83-607)

Test values

Sensor temperature in °C	Resistance in kΩ
+10	18.2 to 21.5
+15	15.3 to 17.2
+20	11.5 to 13.5
+25	9.5 to 10.5
+30	7.5 to 8.5
+35	6.0 to 7.0
+40	4.5 to 5.5
+45	3.5 to 4.5

Conventional tester

Multimeter	e.g. SUN, DMM 5

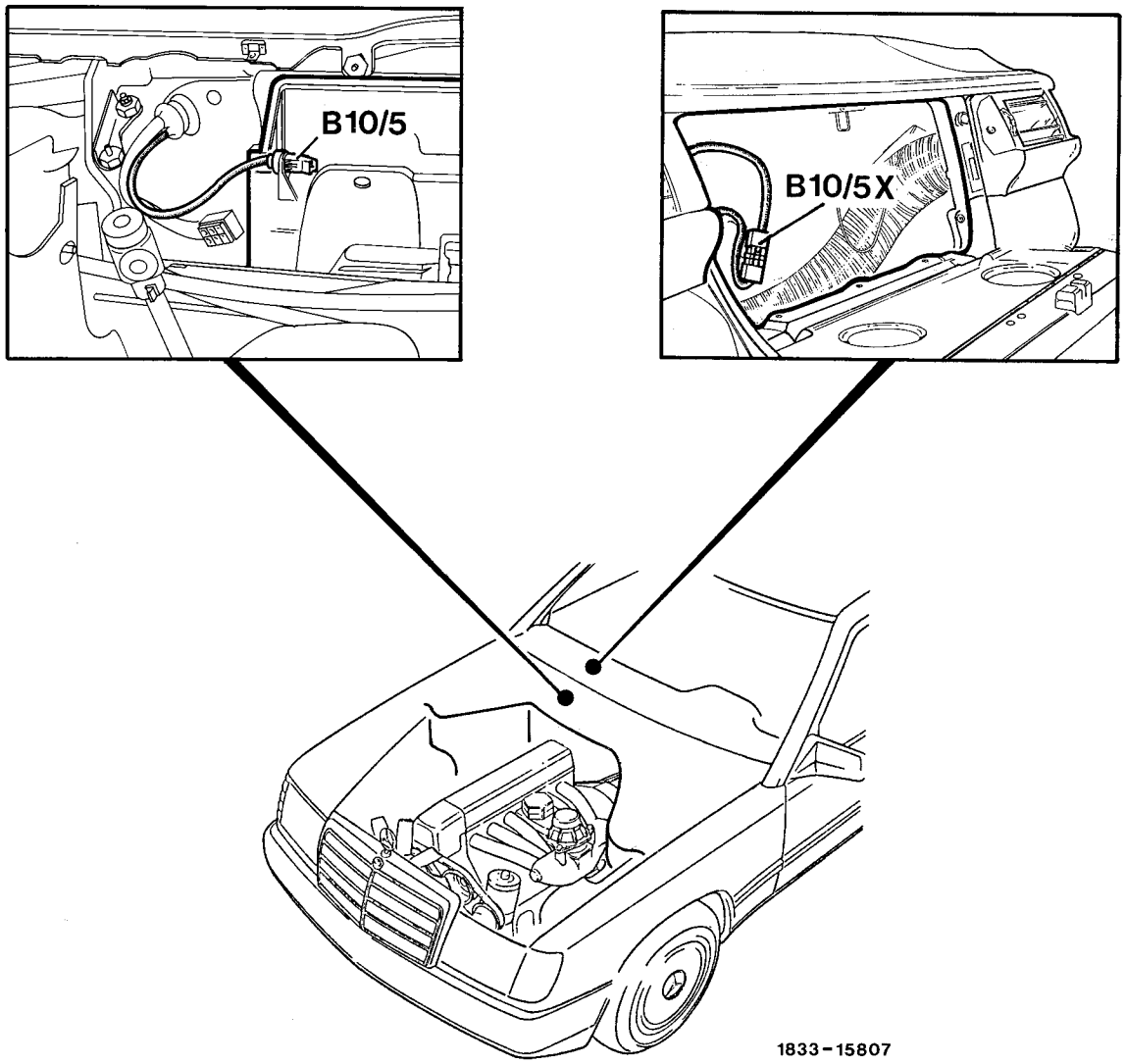

Cover on air inlet	Remove (83-140)
Glove box	Remove
2-pole plug connection (B10/5x)	Disconnect
Temperature sensor outside air (B10/5)	Pull out, to do so, remove housing of 2-pole plug (B10/5x)
In reverse order	Install
Automatic climate control	Check

Test values

Sensor temperature in °C	Resistance in kΩ
+ 10	5.0 to 6.0
+ 15	4.0 to 4.6
+ 20	3.1 to 3.9
+ 25	2.4 to 3.0
+ 30	1.9 to 2.3
+ 35	1.6 to 2.0
+ 40	1.4 to 1.6
+ 45	1.1 to 1.3

Conventional tester

Multimeter	e.g. SUN, DMM 5

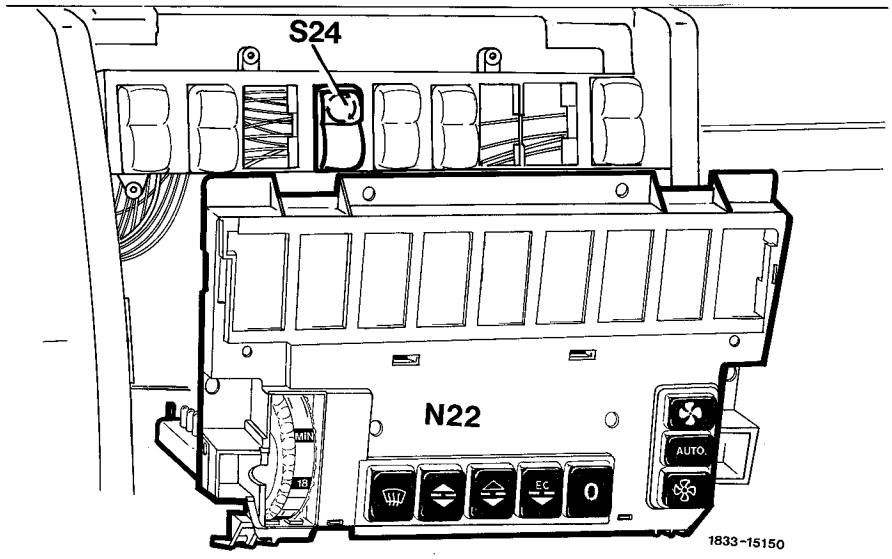

Control unit (N22)	Remove (83-635, section A)
Fresh/recirculated air switch (S24)	Pull out, check
In reverse order	Install

Testing

1 Connect ohmmeter to terminals 3 and 4.

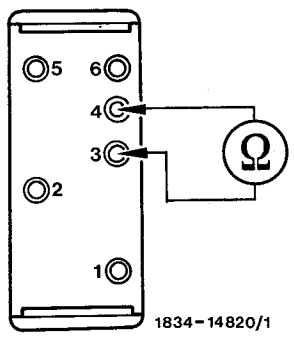

2 Switch on switch (S24) and hold (arrow).
Nominal value: 0 – 1 Ω

3 Release switch (S24).
Nominal value: ∞

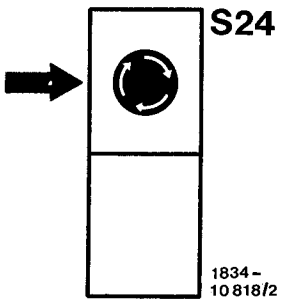

4 Afterwards connect to terminals 2 and 4

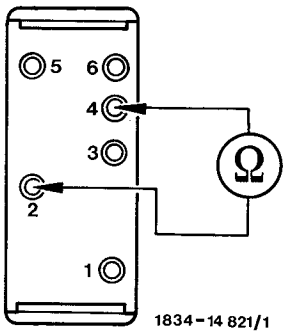

5 Switch off switch (S24) and hold (arrow).
Nominal value: ∞

6 Release switch (S24).
Nominal value: 0 – 1 Ω

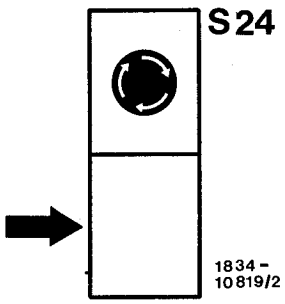

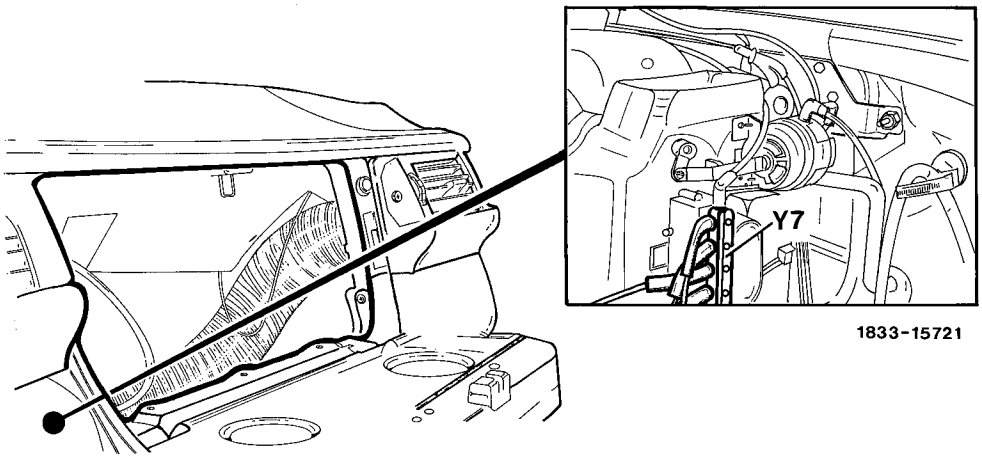

Glove box	Remove
Switchover valve block (Y7) from heater box	Unclip
Vacuum lines and 8-pole coupling	Pull off
In reverse order	Install, paying attention to color coding of the vacuum lines (see vacuum diagram 83-600, section M)

A. Vacuum element (38) for defroster nozzle flaps

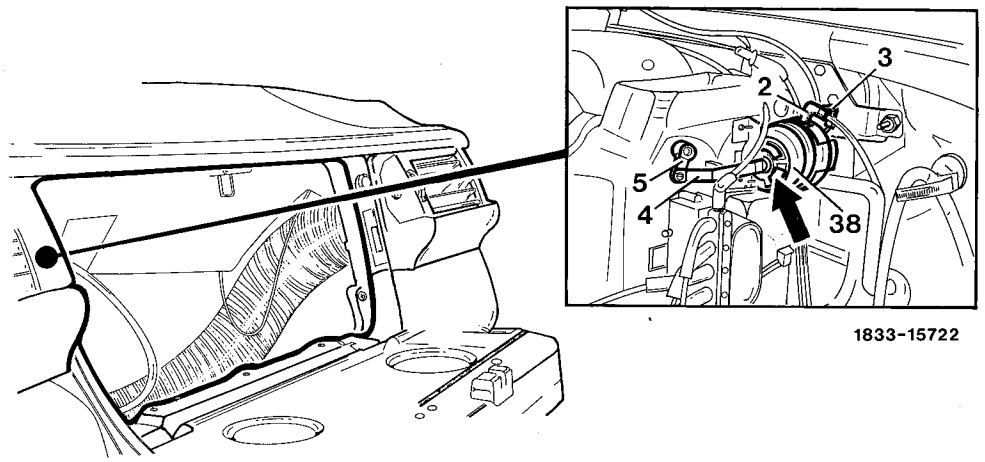

Glove box	Remove
Both vacuum lines (2 and 3)	Pull off
Actuation rod (4) on lever (5)	Unclip
Lock (arrow)	Depress and turn the vacuum element (38) to the left at the same time
In reverse order	Install, connecting the red/light blue vacuum line (2) at the side and the vacuum line red/white (3) at the back.

B. Vacuum elements (39) for footwell flaps

a) On vehicles up to 08/86

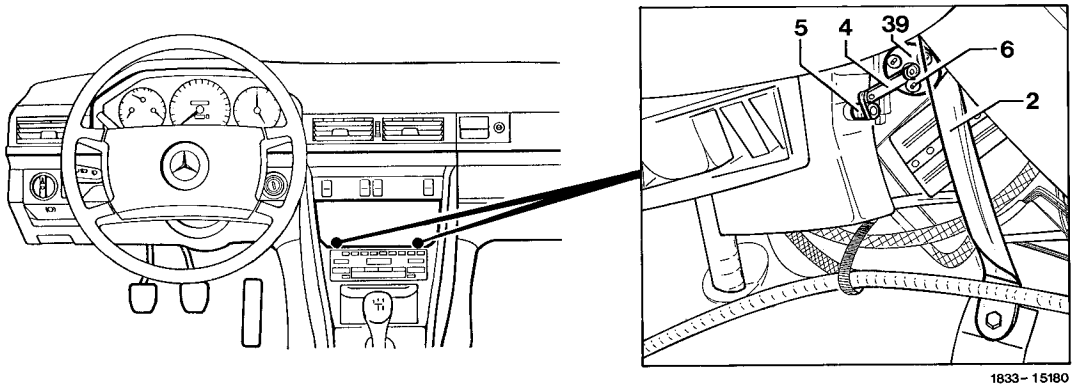

Control unit	Remove (83-635, section A)
Lateral covering on center console left or right	Remove
When removing the left vacuum element	Remove air duct for rear passenger compartment
When removing the left vacuum element	Remove strut (2)
Vacuum line on element (39)	Pull off
Actuation rod (4) on lever (5)	Press off
3 locks (6)	Press off
In reverse order	Install, mounting the locks (6) with rubber washers

83.0742-665/2

b) On vehicles as of 09/86

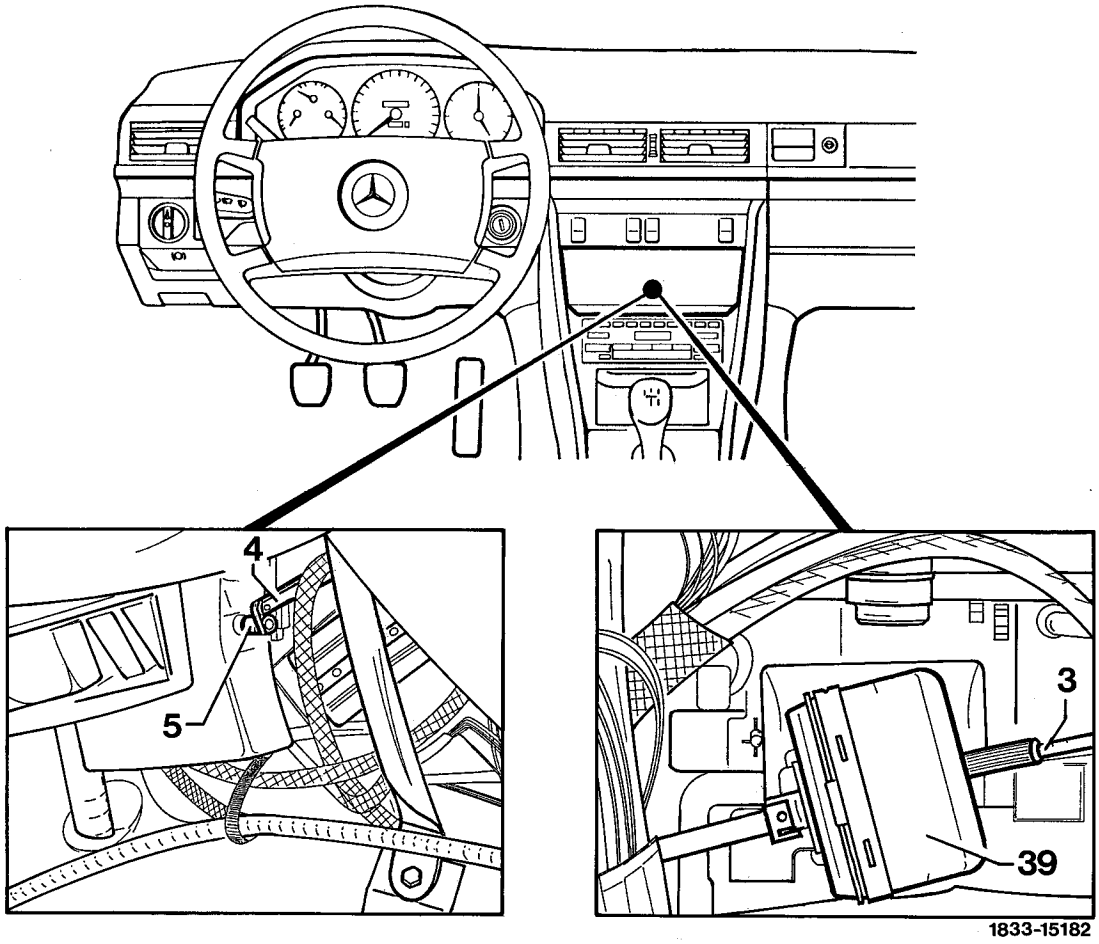

Control unit	Remove (83-635, section A)
Vacuum line (3)	Pull off
Actuation rod (4) on lever (5)	Press off
Vacuum element (39) from holder	Pull off
In reverse order	Install

83.0742-665/3

C. Vacuum element (40) for center nozzle flap

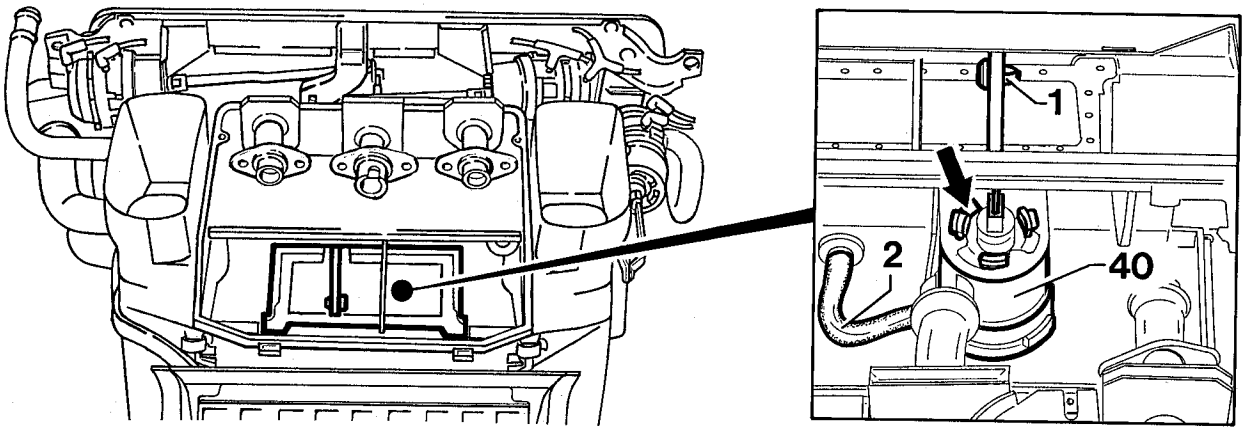

1833-15179

Heat exchanger	Remove (83-622)
Clip (1)	Press off
Hose (2) on vacuum element (40)	Pull off
Lock (arrow)	Press down and turn the vacuum element (40) to the left at the same time
In reverse order	Install

83.0742-665/4

D. Vacuum element (41) for diverter air flap

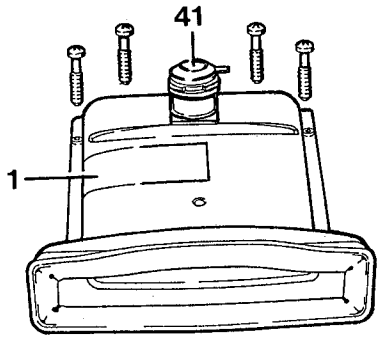

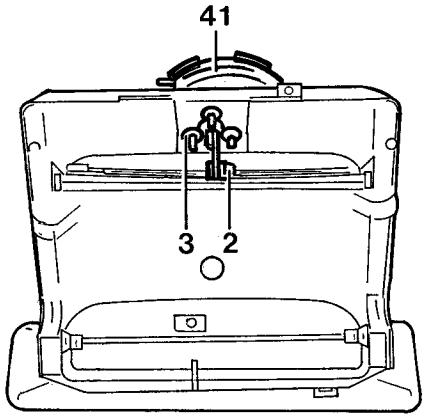

1833-15163

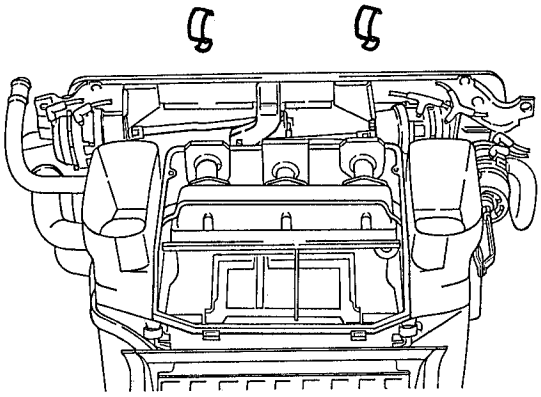

Instrument panel	Remove (68-100)
Cover (1)	Remove, 4 screws and 2 clips
Clip (2)	Press off
3 locks	Press off
In reverse order	Install

E. Vacuum element (42) for fresh/recirculated air flap left or right

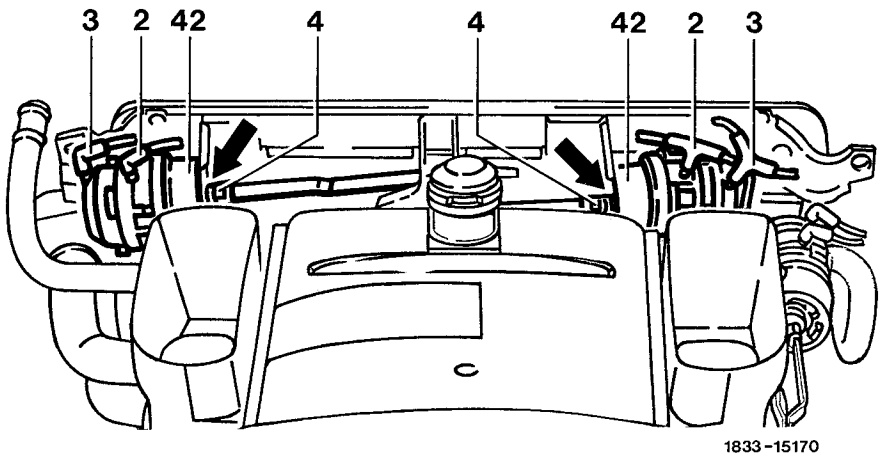

Instrument panel	Remove (68-100)
Both vacuum lines (2 and 3)	Pull off
Clip (4)	Open and disconnect actuation rod
Lock (arrow)	Press down and turn the vacuum element (42) to the left at the same time
In reverse order	Install, connecting the vacuum line dark red (2) at the side and the vacuum line medium green/light blue (3) at the back

Check adjustment of the fresh/recirculated air flap, readjust with the adjusting screw (6) if required.

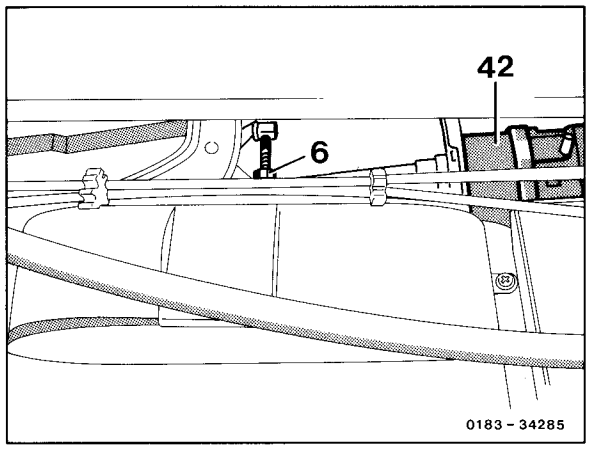

42 Vacuum element for fresh/recirculated air flap right

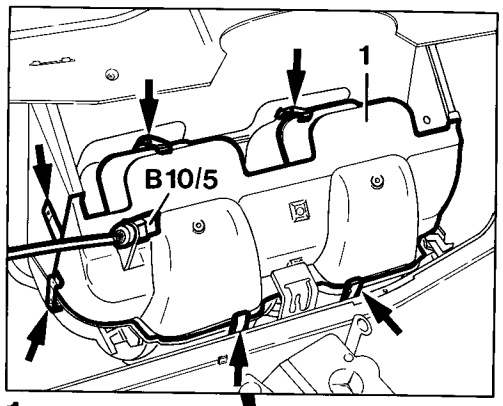

1

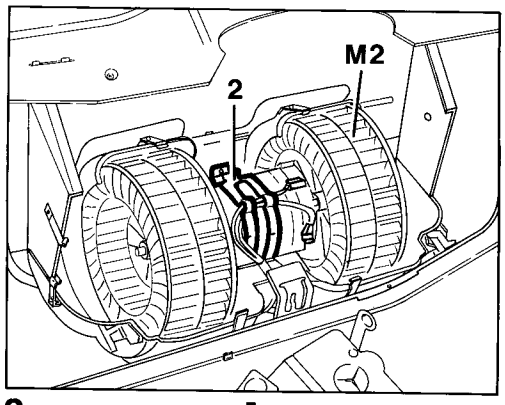

2

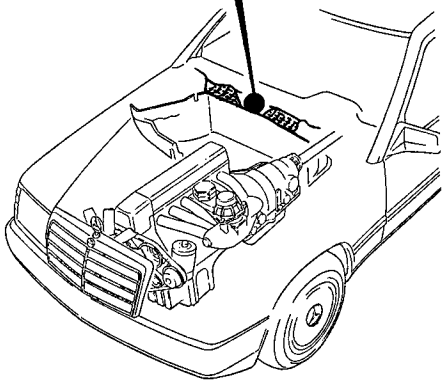

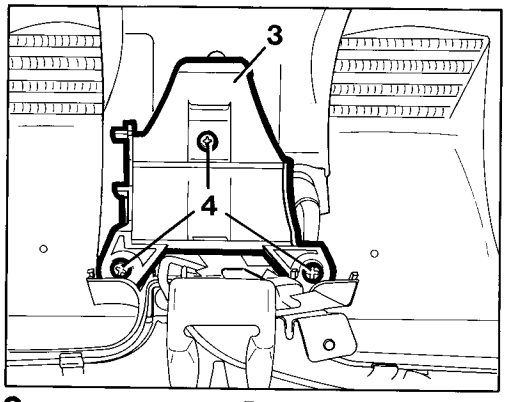

3

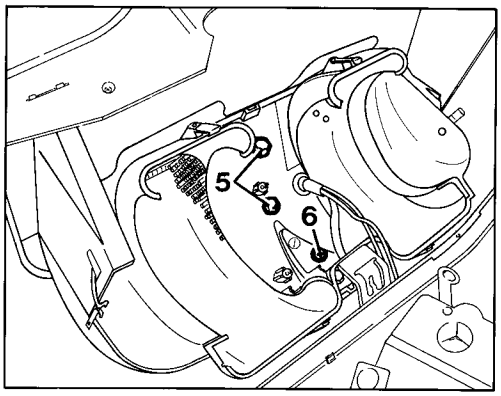

4

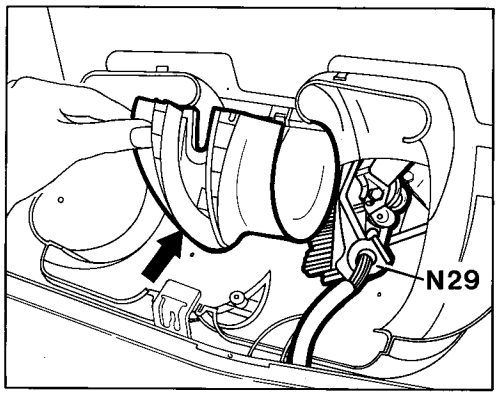

5

1832-15512/1

Wiper system	Remove (82-680)
Temperature sensor outside air (B10/5)	Pull out (Fig. 1)
Cover (1)	Remove, unclipping 8 clips (arrow) (Fig. 1)
Retaining strap (2)	Unclip (Fig. 2)
Flat plug on blower motor	Pull off and remove blower motor (M2, Fig. 2)
Holder (3)	Remove, unscrewing 3 screws (4, Fig. 3)
Screws (5 and 6)	Unscrew (Fig. 4)
Housing in the area (arrow)	Carefully lift and remove blower regulator (N29) at the side (Fig. 5)
In reverse order	Install

83-675 Removal and installation of Hall-sensor

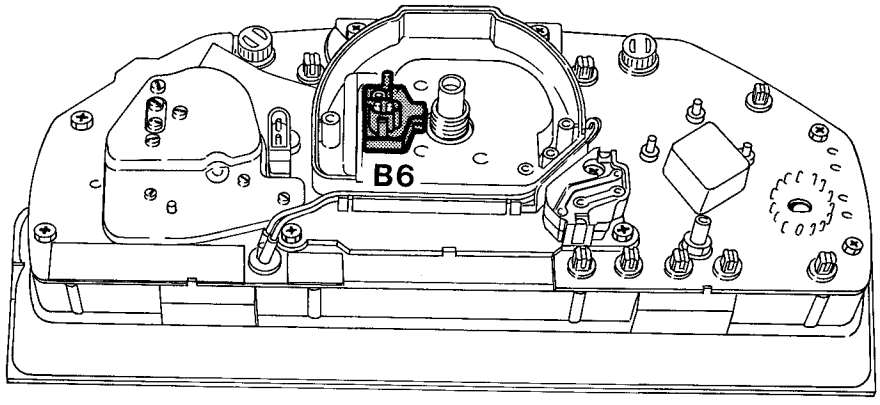

1543-14705/1

Instrument cluster	Remove (54-250)
Rpm transmitter (B6) from speedometer	Unscrew

Removing and installing engine compartment lower panel 6190

Model 124.0/2 129 140 201.0

Unscrew small bolts (arrows) and remove engine compartment lower panel.

Install in reverse sequence.

Note: On model 129 and 201.028/029 install engine compartment lower panel so that the edges of the side panels overlap the lower panel.

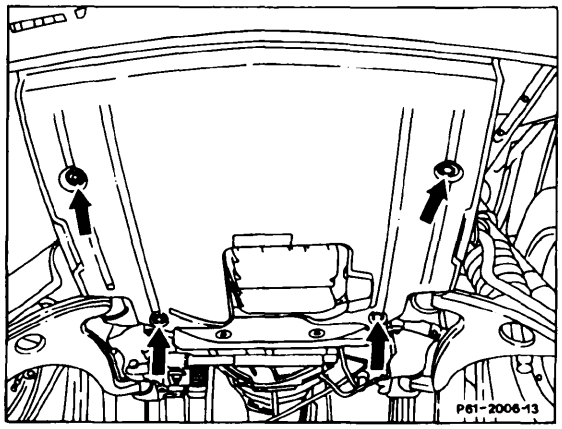

Model 124 Engine compartment lower panel, short version

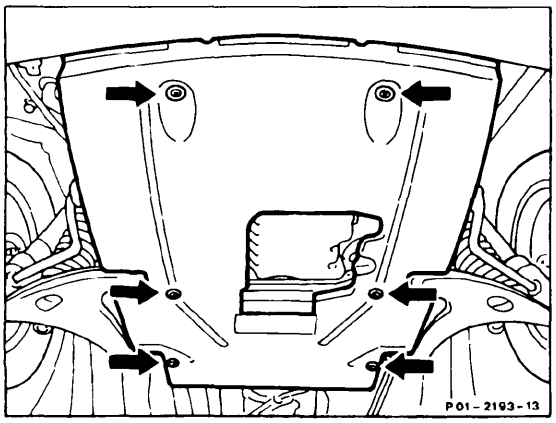

Model 124 Engine compartment lower panel, long version

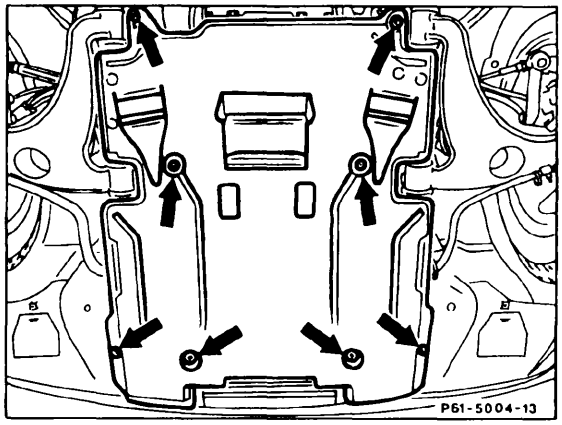

Model 124.036

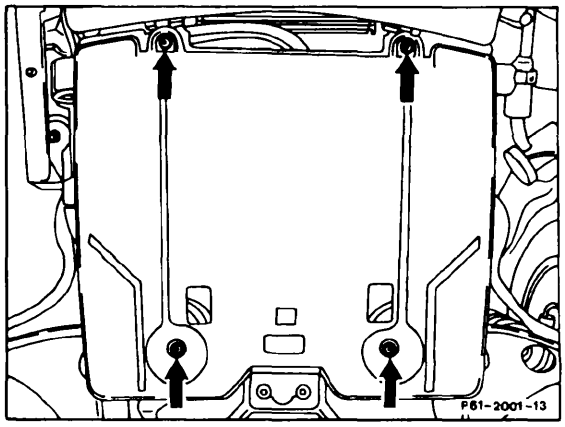

Model 129

6190 Removing and installing engine compartment lower panel

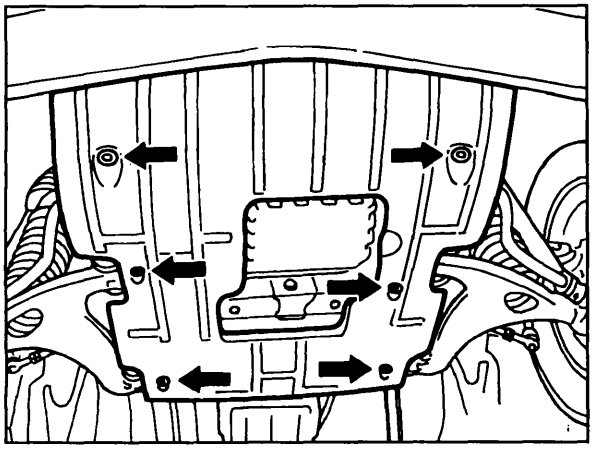

Model 201.024/028/034

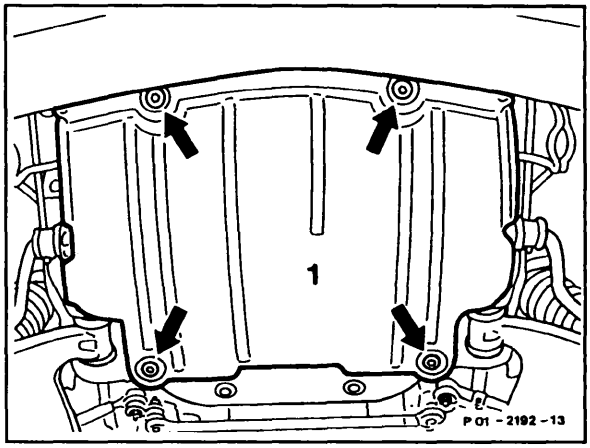

Model 201.028

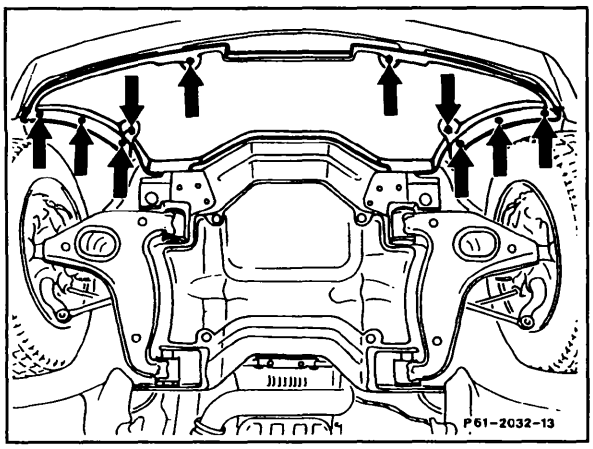

Model 140 front section

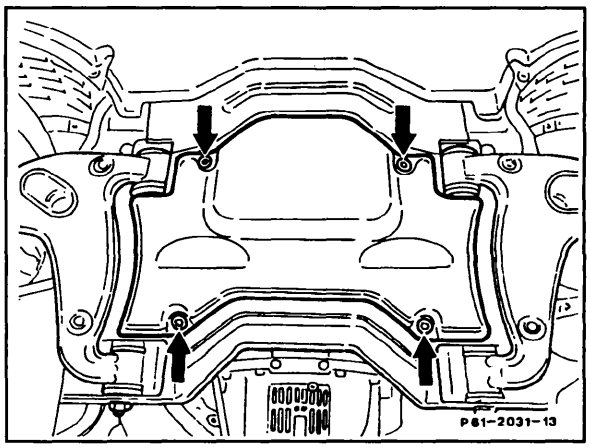

Model 140 rear section

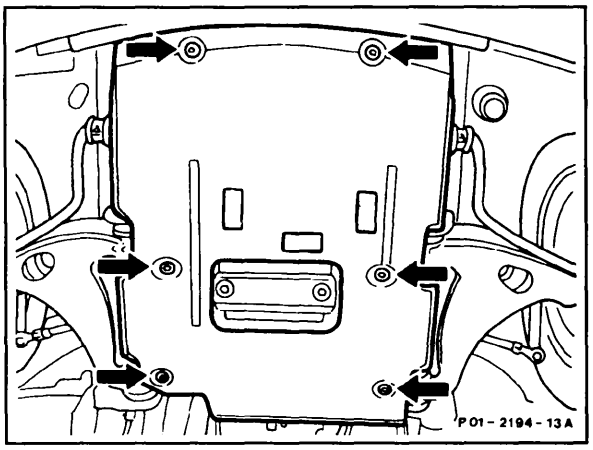

Model 201.029 with cooling openings

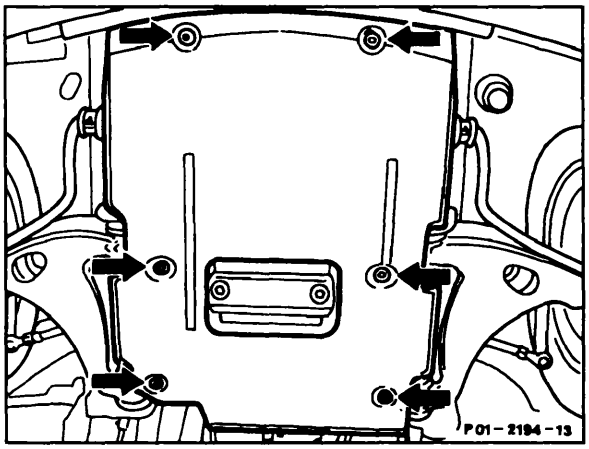

Model 201.029 without cooling openings

Models 124.036, 140
Install lower engine compartment cover (1) so that it overlaps the wheel well covers (2).

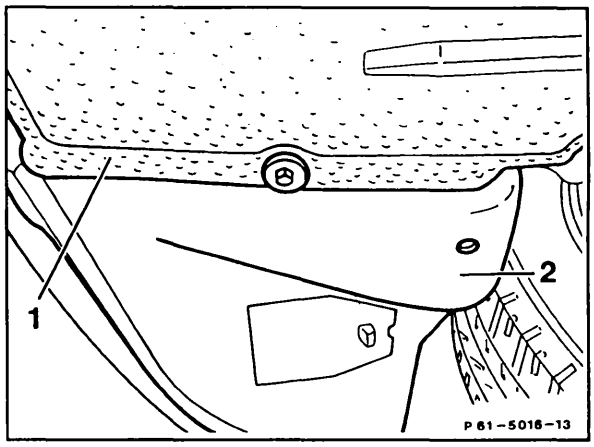

Model 124.036

Models 124 (except 124.036), 201
Install the side panels so that the edges overlap the engine compartment cover.

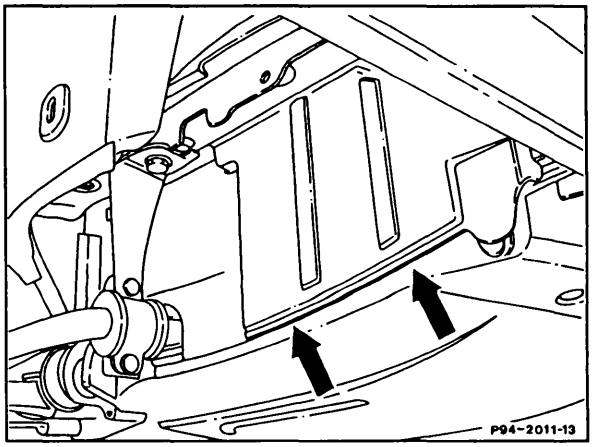

Model 129
Install lower engine compartment cover (1) so that the side panels (3) are positioned inside the lower engine compartment cover.

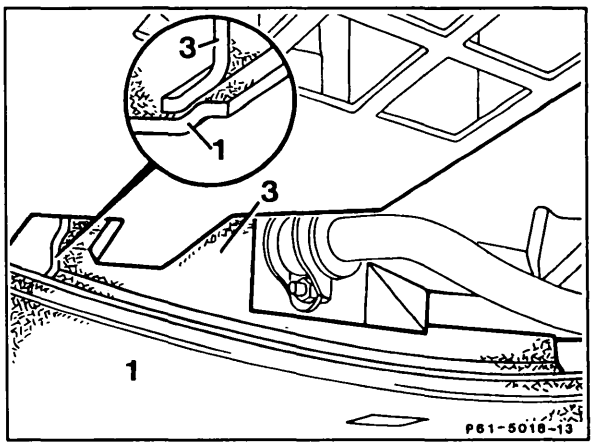

Lubricating folding side mirror

8820

Model 107 123
except maintenance-free side mirrors

Grease type

Lubricating grease	Multipurpose grease

Note: Maintenance free mirrors can be recognized by the revised mount.

Standard on model 107 and 123, starting January 1984.

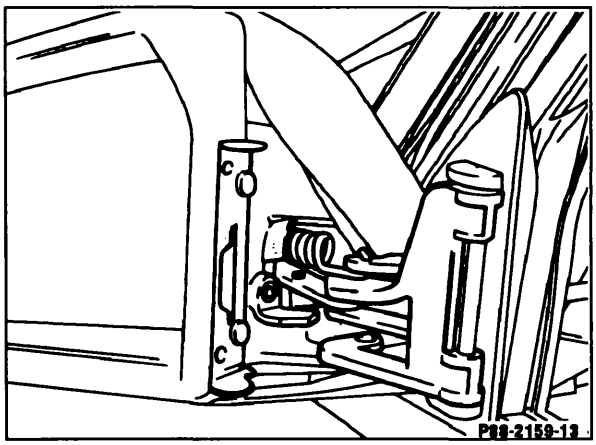

Disengage mirror from rear in forward direction by means of a light blow with the ball of the hand.

Lubricate bearings of both locking pins (arrows b) and move mirror back and forth several times.

Grease holding bracket and locking pin (arrows a) at both bearing points.

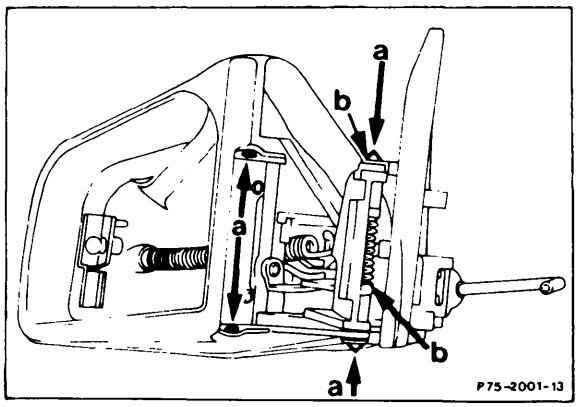

Lubricating hood

8821

All models

Grease type

Lubricating grease	Multipurpose grease Refer to Factory Approved Service Products list

Oil (can)

- Hood support (except models 124, 129, 140).

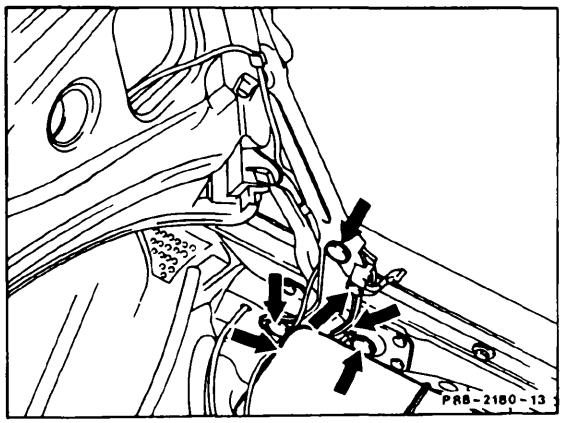

- Hinge bearings (except models 124, 129, 140).

- Hood latch.

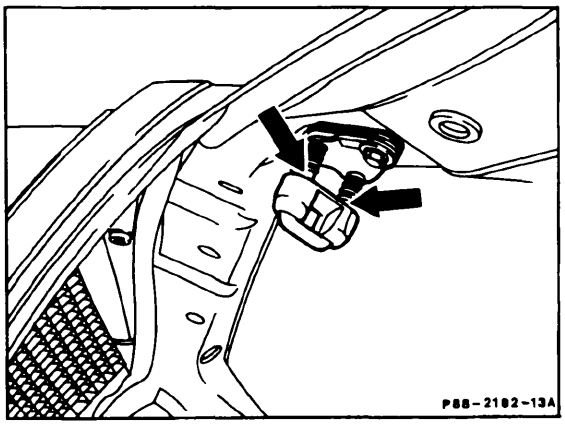

Grease

- Hood lock.

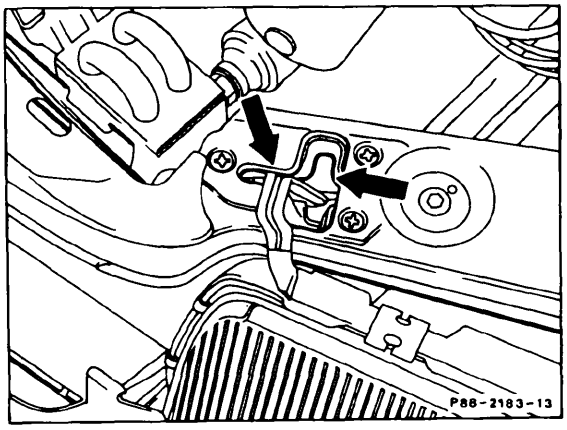

Oil (can)

- Safety catch.

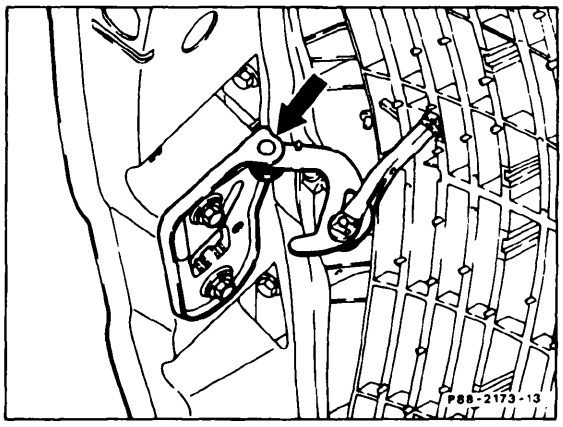

Removal

1 Force off trimstrips.

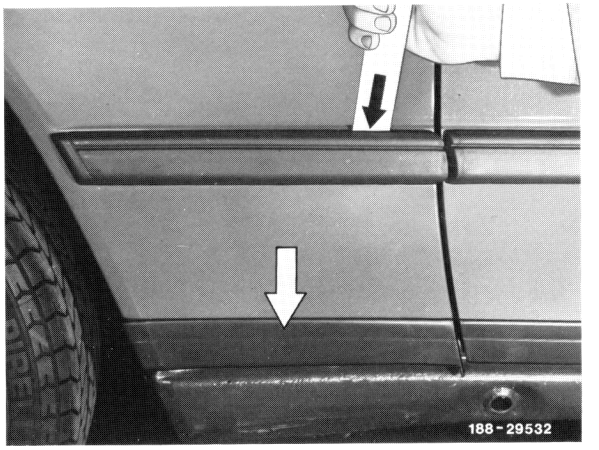

2 Remove screws on front wall pillar and on side member.

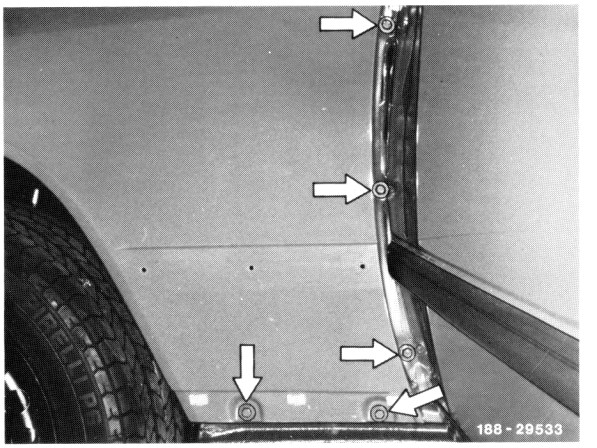

3 Remove screws on flange at top.

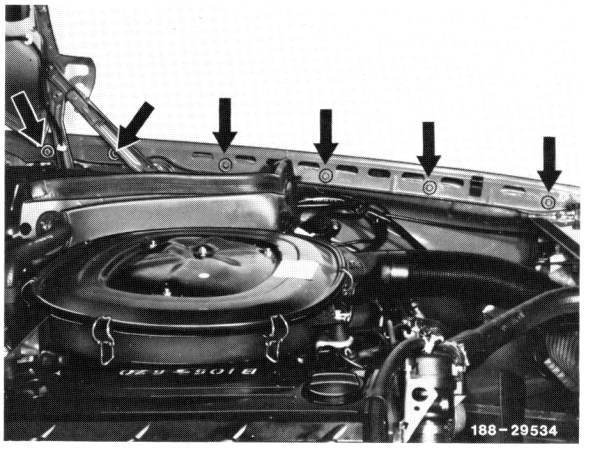

4 Push holding bracket of flasher lamp unit inwards, remove flasher lamp unit in forward direction and pull off plug connection.

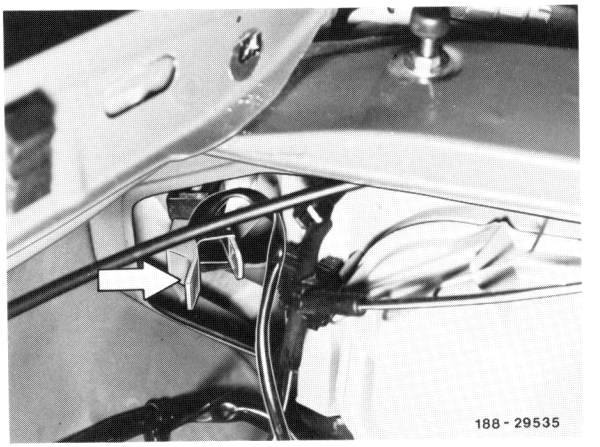

5 Remove screws in cutout of flasher lamp unit.

6 Unscrew screw on molding and remove molding.

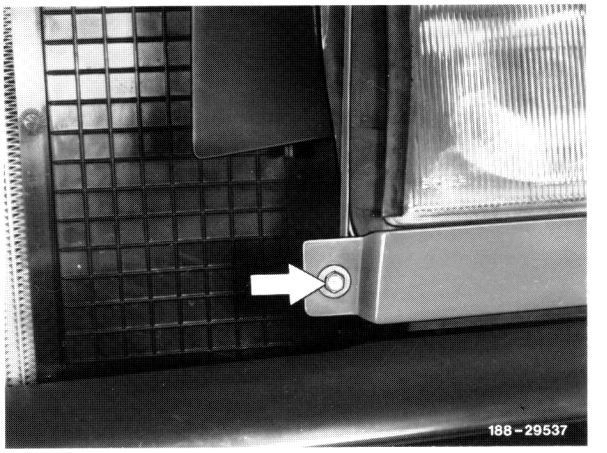

7 Unscrew screw at front.

8 Unscrew lateral screw on bumper.

9 Pull bumper laterally downward and unscrew lower screw.

10 Remove front fender forward in upward direction.

Installation

11 Coat spare fender with MB permanent underfloor protection.

12 Check sealing rubber on inner fender for correct seat.

13 Mount front fender and fit.

14 For further installation proceed in reverse order.

15 Upon assembly of fender, preserve cavity above inner fender through opening in flasher lamp unit cutout with cavity wax.

Note: Mask openings on fender top (refer to item 3) prior to waxing and unmask again upon completion of waxing.

Removal, installation

1 Unscrew screw on lateral holder left and right.

2 Unscrew both fastening nuts left and right on side member.

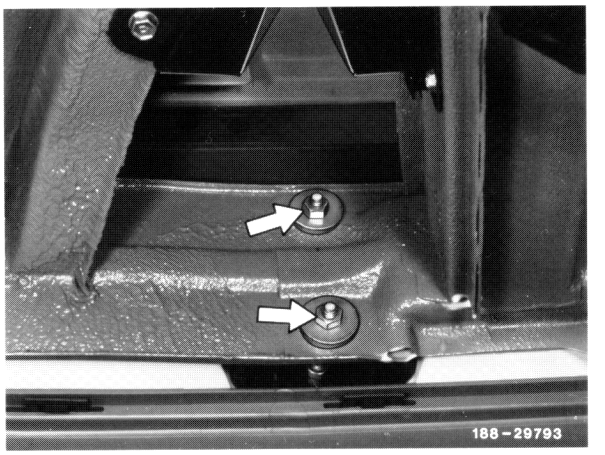

3 Remove screw in center of bumper and remove bumper in forward direction.

4 For installation proceed in reverse order.

88–205 Removal and installation of molding on front bumper

Preliminary work:
Bumper removed (88-200)

Operation no. of operation texts and work units or standard texts and flat rates:

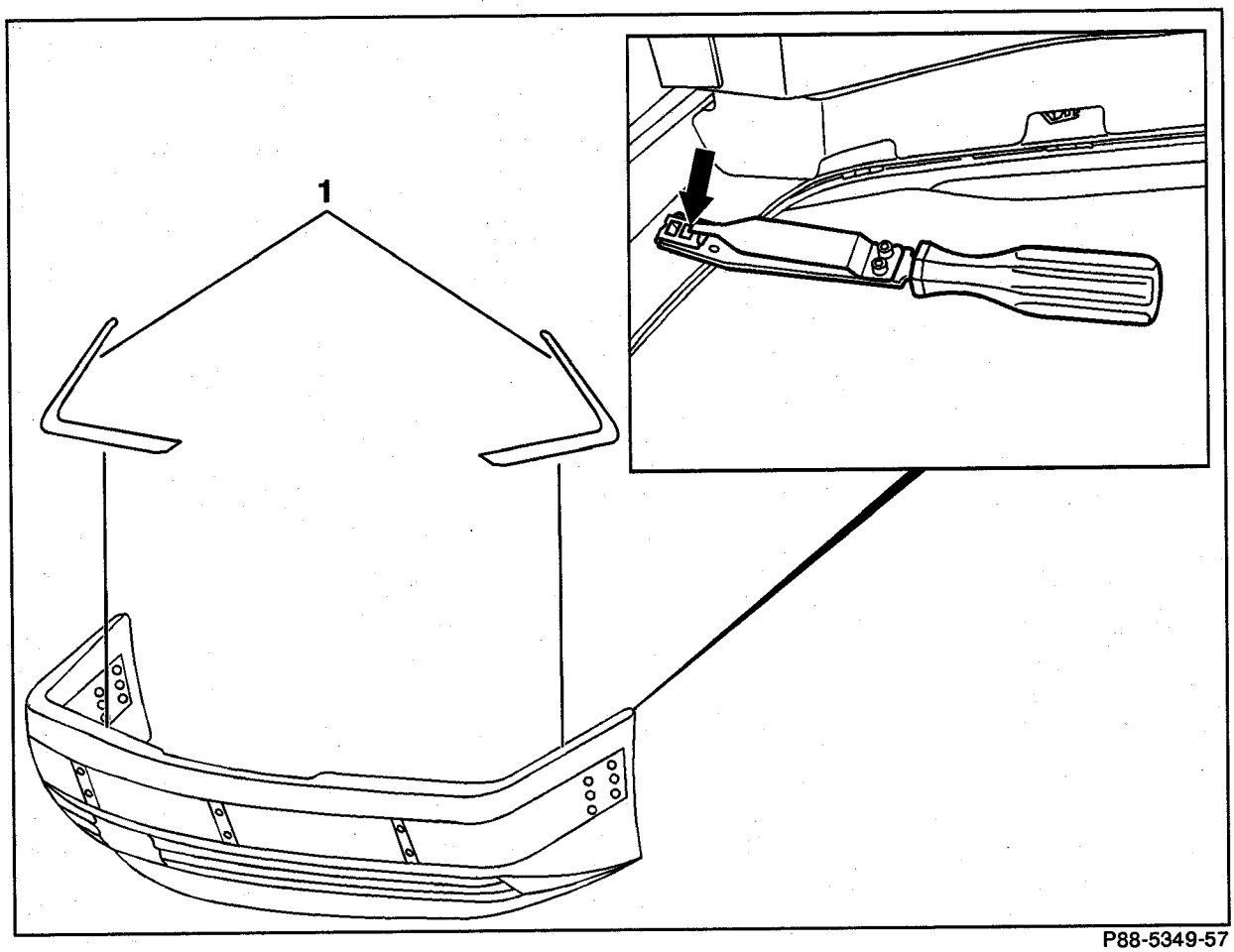

P88-5349-57

Clips (arrows, 14 each)	.....	remove, install, installation tool 140 589 34 23 00.
Molding (1)	.....	remove, install.

Special tool

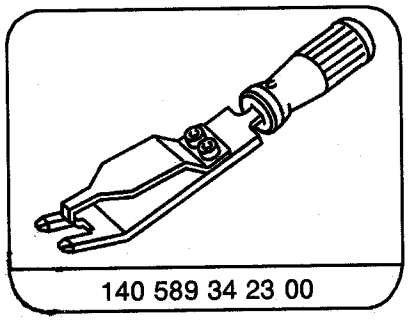

140 589 34 23 00

Note

The bumpers consist of the following components:

Protective strip
Energy-absorbing foam member, outside
Energy-absorbing foam member, inside
Trim
Cross member (on body)

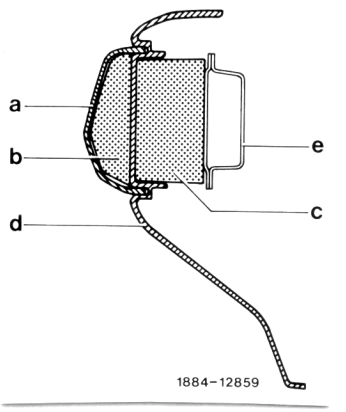

a Protective strip
b Foam member, outside
c Foam member, inside
d trim
e Cross member

Disassembly, assembly

1 Remove screws left and right.

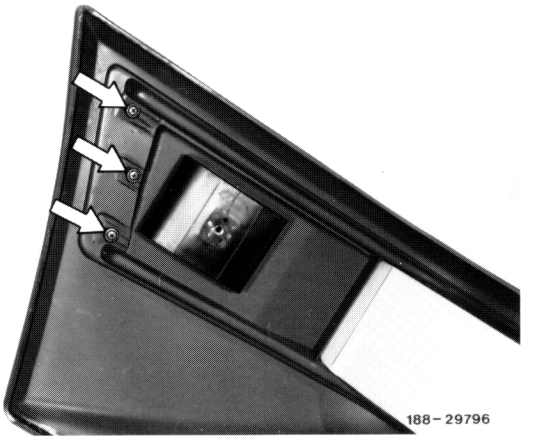

2 Press back retaining lugs in pairs starting from outside.

3 Remove protective strip and foam member.

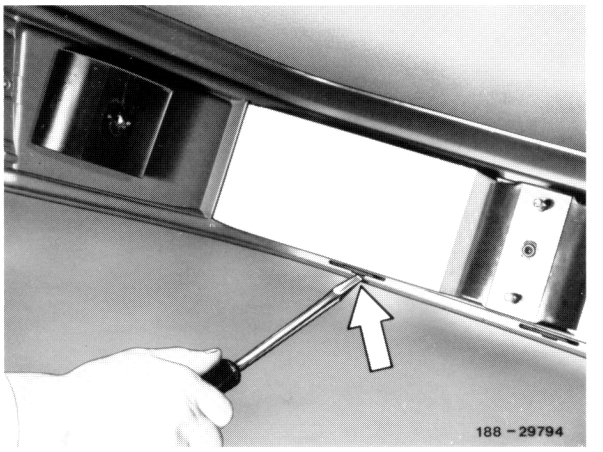

4 Unscrew front holder.

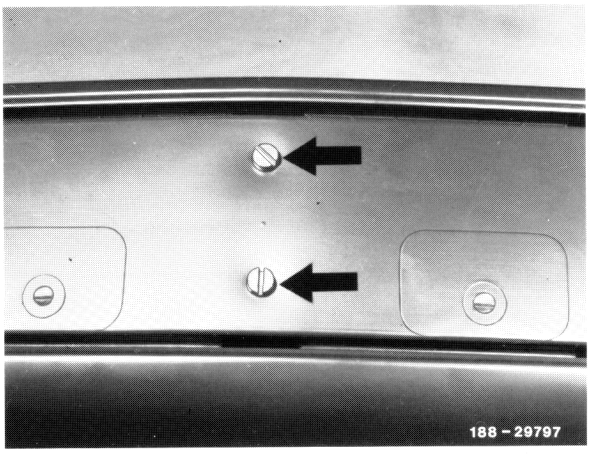

5 Drill out fastening rivets of lateral holders.

Note: Hold rivets inside with pliers, so that the rivet is not turning along while drilling.

6 For assembly proceed in reverse order.

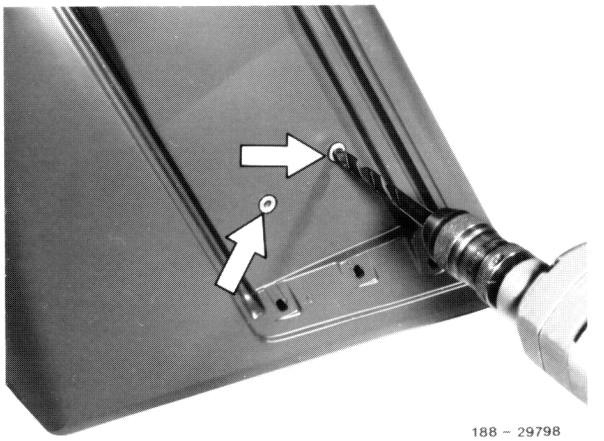

Note: If rivets and a riveting tool are not available, lateral holders can be screwed on.

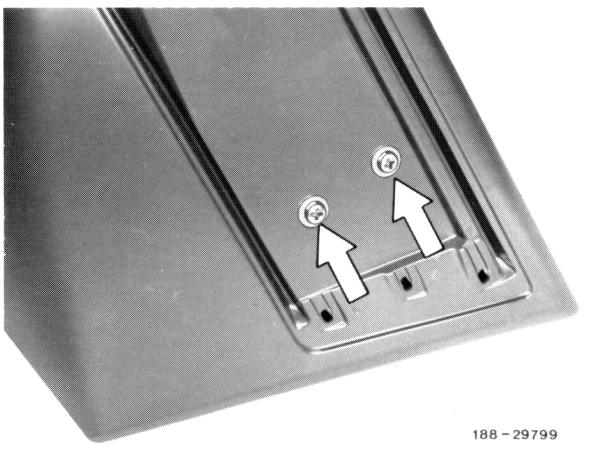

A. Sedan

Removal, installation

1 Unscrew fastening nuts outside left and right.

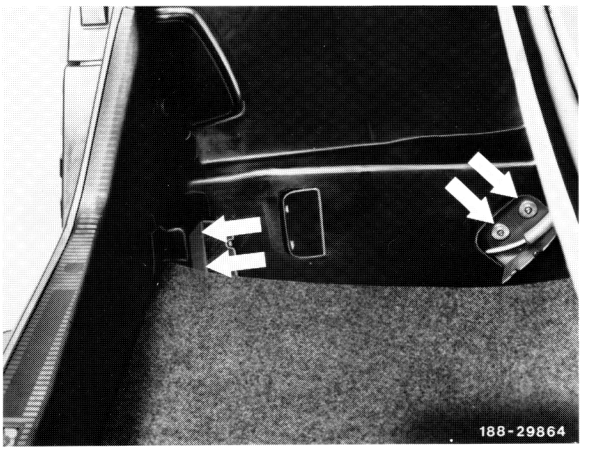

2 Unscrew nuts on rear center piece.

3 Take out front fastening bolts on rear fender and remove bumper in rearward direction.

4 For further installation proceed in reverse order.

B. T-model

1 Remove or open trim at side in loading space.

2 Remove spare wheel.

3 Unscrew fastening nuts outside left and right.

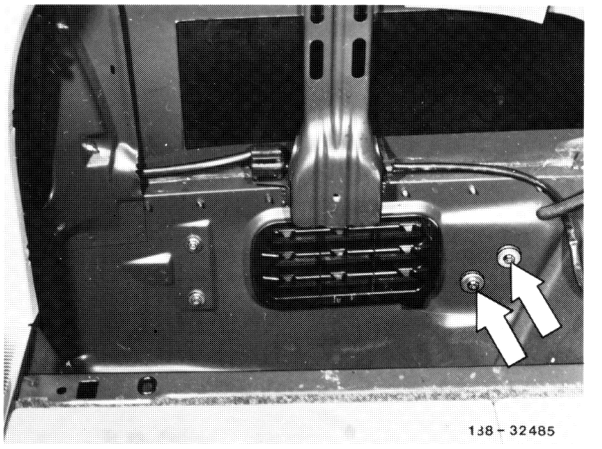

4 Unscrew nuts on rear center piece.

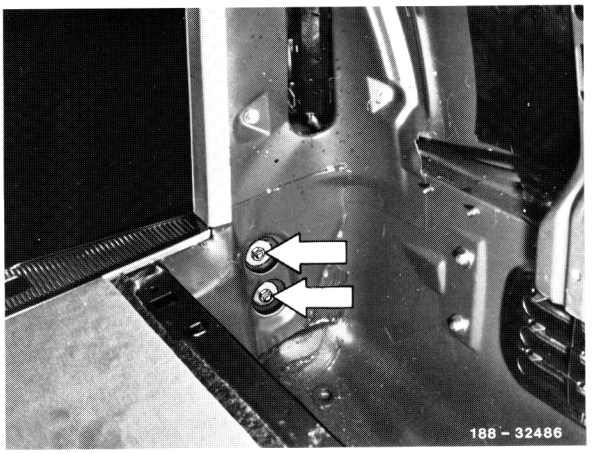

5 Loosen trim at rear of loading space recess and unscrew the two fastening nuts in rear center piece.

6 Extend front fastening bolts on rear fender and remove bumper toward the rear.

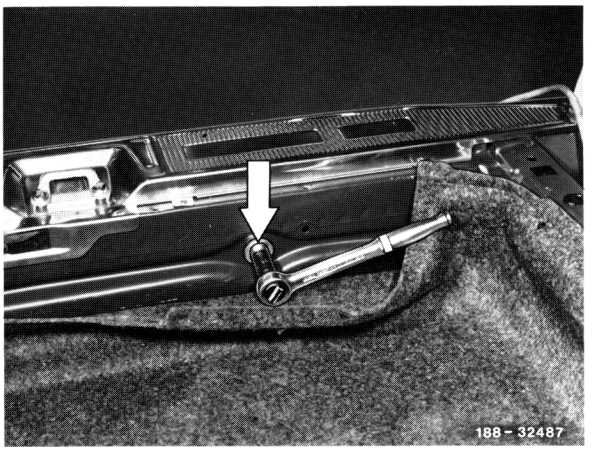

7 Check or mount seal and holder laterally on fender.

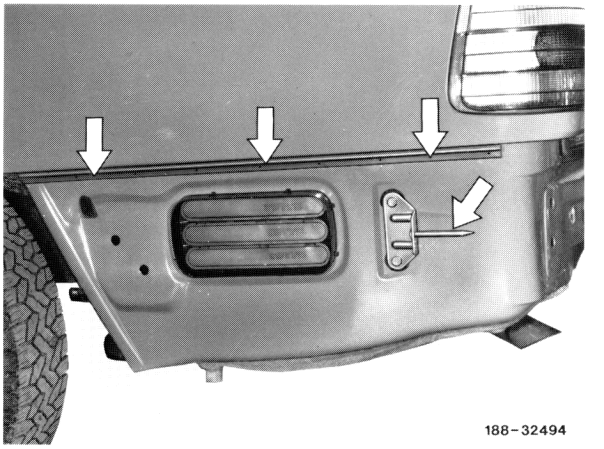

Installation note

When installing bumper, make sure that the eye on the side of the bumper is plugged into holder.

8 For further installation proceed in reverse order.

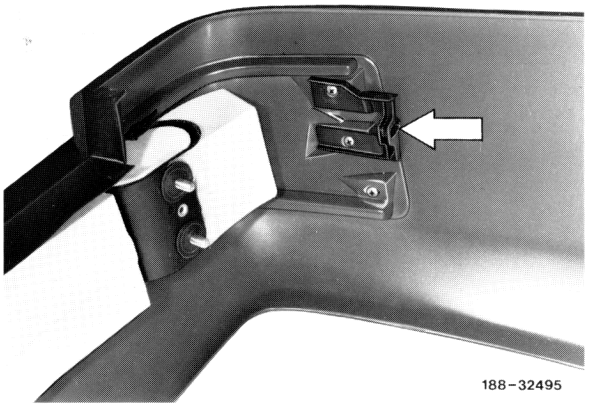

88–225 Removal and installation of molding on rear bumper

Preliminary work:
Bumper removed (88-220)

Operation no. of operation texts and work units or standard texts and flat rates:

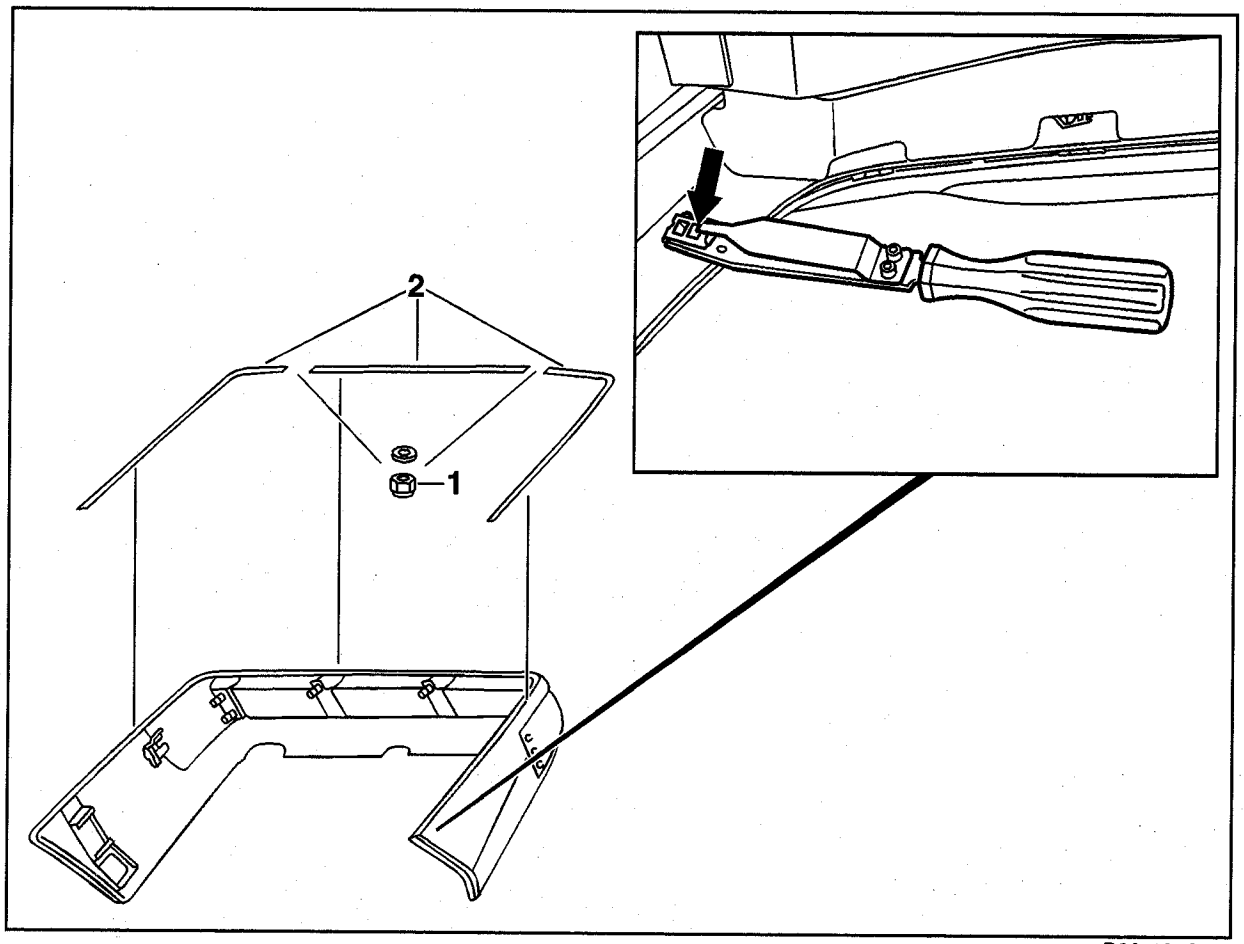

P88-5348-57

Nuts (1) at separation points on left and right . . .	unscrew, screw on.
Clips (arrow, 24 each)	remove, install, installation tool 140 589 34 23 00.
Molding (2)	remove, install.

Special tool

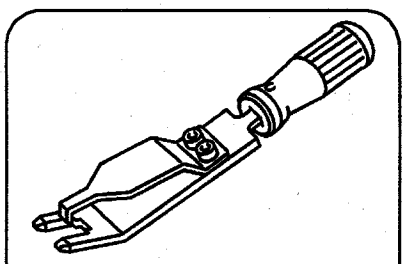

140 589 34 23 00

Removal, installation

1 Move engine hood into vertical position (90°) and place one rag each under outer corners.

2 Force cover from engine hood reinforcement.

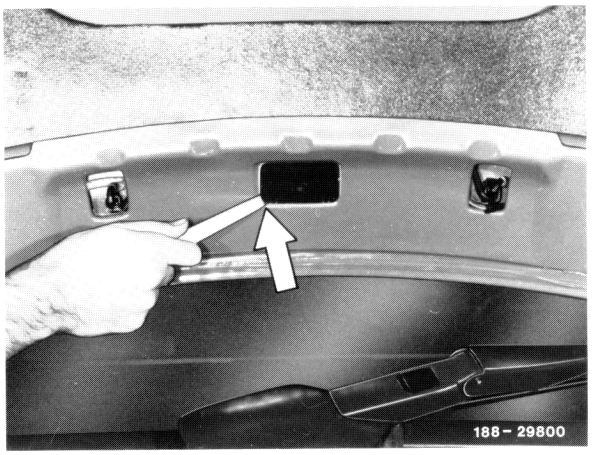

3 Pull hose (supply line) from check valve.

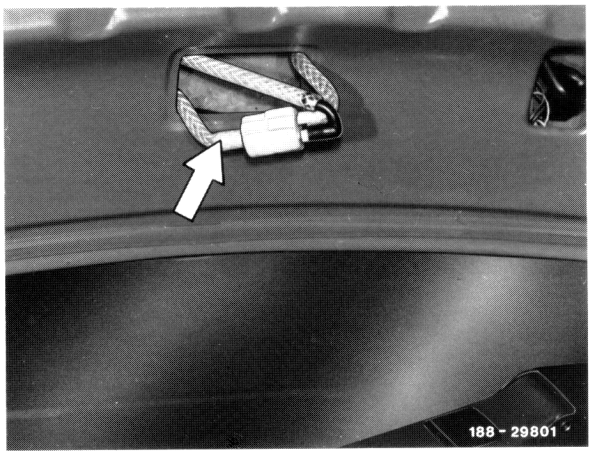

4 Pull connecting cable from righthand windshield washer nozzle.

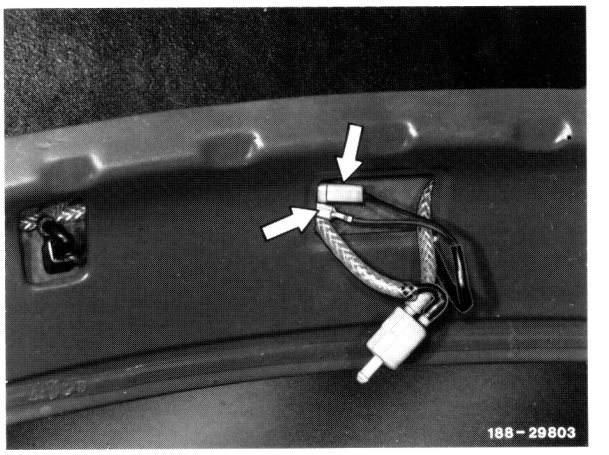

5 Pull connecting cable from lefthand windshield washer nozzle.

6 Expose electric connecting cable and hose on engine hood.

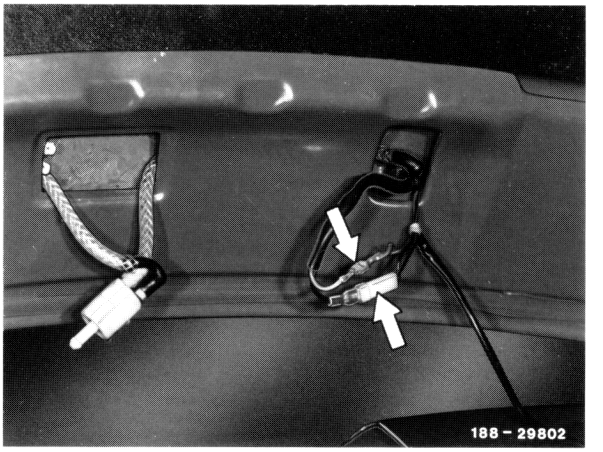

7 Unscrew fastening screws left and right and remove engine hood.

8 For installation proceed in reverse order.

Note: Perform adjusting jobs according to 88–302.

Note

For minor adjustments of height or length, loosen screws on hinges and adjust engine hood.

If major adjusting paths are required, adjust engine hood as described under A, B and C.

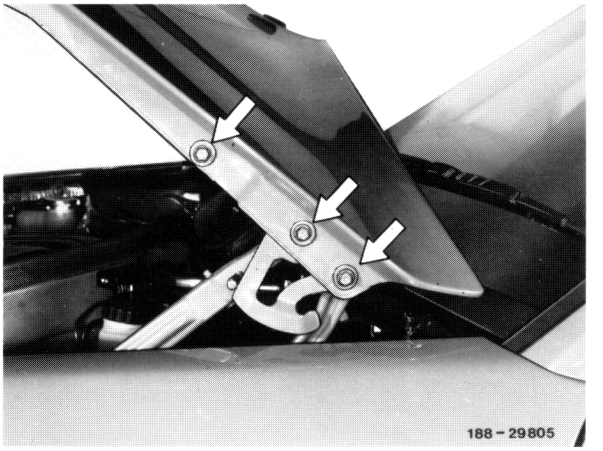

A. Adjusting in longitudinal direction

1 Remove inner fender left and right.

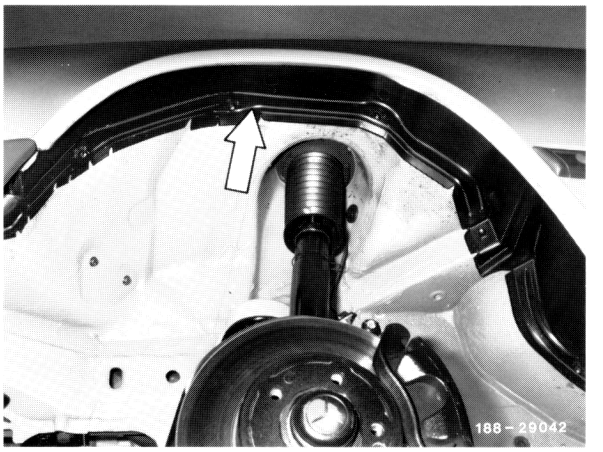

2 Move engine hood into vertical position (90°) and disconnect springs on engine hood hinges.

3 Close engine hood.

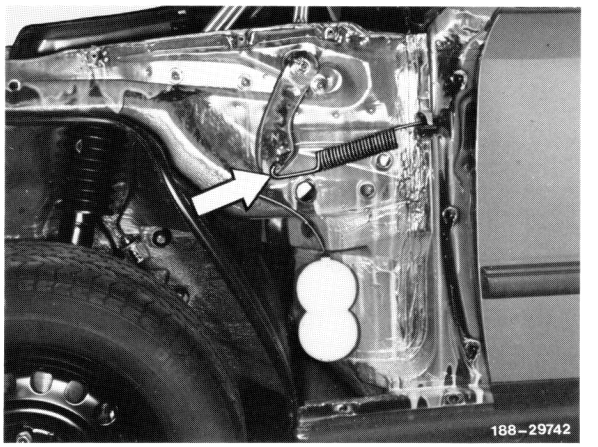

Shown with front fender removed

30217

4 Loosen fastening nuts on hinges.

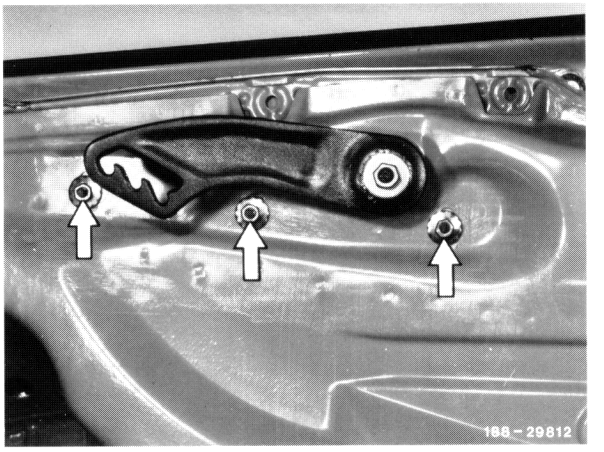

Shown with front fender removed

5 Loosen screws on engine hood lock upper half.

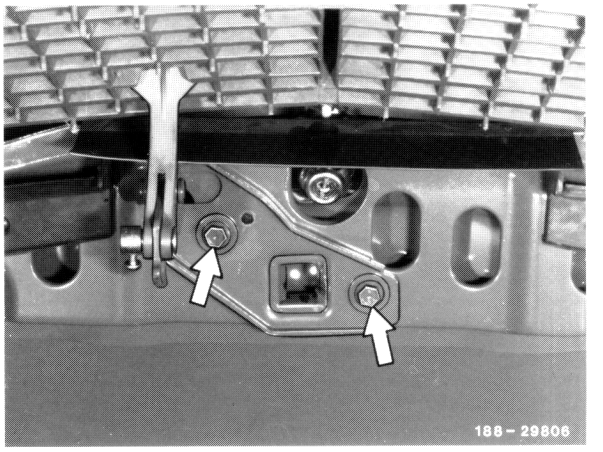

6 Adjust engine hood in such a manner that the front edge of fenders is in alignment with front edge of engine hood.

7 Tighten fastening nuts on hinges from direction of wheelhouse.

8 Tighten screws on engine hood lock upper half.

9 For further installation proceed in reverse order.

B. Adjusting in lateral direction

1 Loosen screws on engine hood lock upper half.

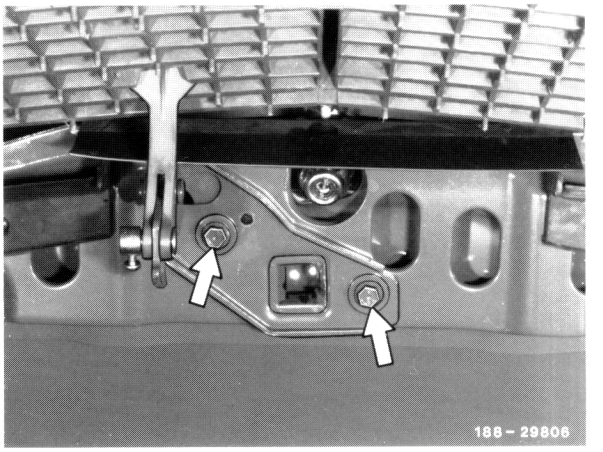

2 Fit engine hood, clearance: 5 mm.

3 Tighten screws on engine hood lock upper half.

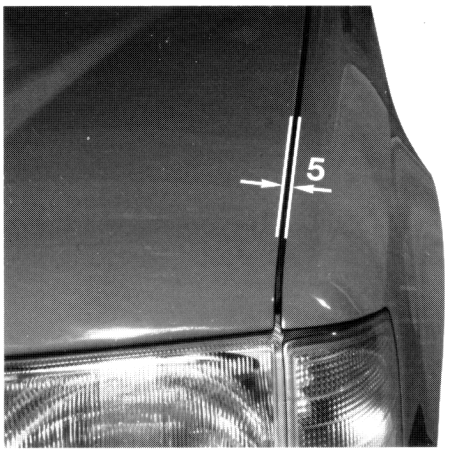

C. Adjusting in height

1 Loosen counternut on stop buffer.

2 Adjust stop buffers in such a manner that the bottom edge of the engine hood is in alignment with upper edge of flasher lamp unit cutout.

3 Remove inner fender.

4 Move engine hood into vertical position (90°) and disengage spring on engine hood hinge.

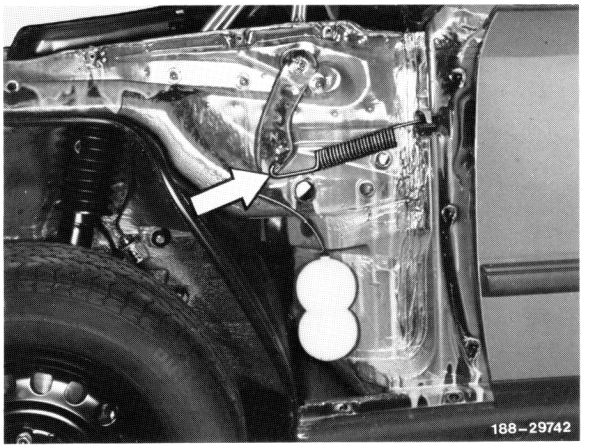

5 Loosen two fastening nuts on hinge (do not loosen front nut, so that the longitudinal adjustment will not change).

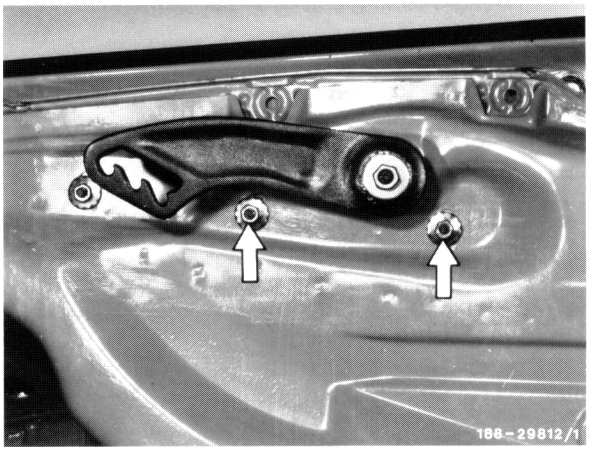

6 Adjust engine hood so that the upper edge of the engine hood at the rear is in alignment with the upper edge of the front fender.

Note: Adjust engine hood in vertical position (90°), tighten nuts, close engine hood and check height.

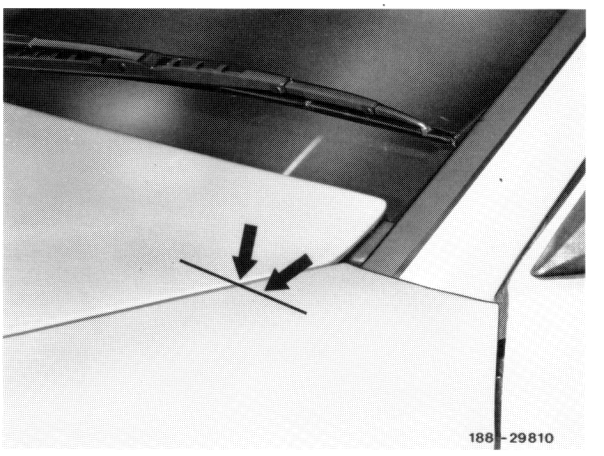

7 Adjust engine hood lock by aligning radiator reinforcement in such a manner that the engine hood is perfectly closing. For this purpose, loosen screw on strut below.

8 For further installation proceed vice versa.

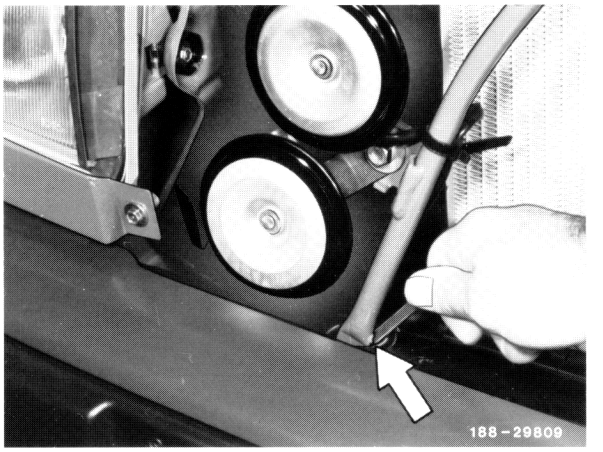

Removal, installation

1 Remove engine hood (88–300).

2 Mark position of engine hood hinge on wheelhouse in engine compartment.

3 Remove inner fender.

4 Disengage spring on engine hood hinge.

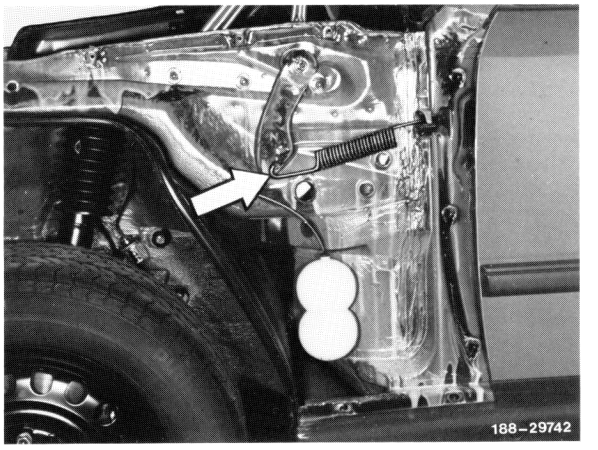

Shown with front fender removed

5 Unscrew nuts, remove spring holding bracket and engine hood hinge.

Note: During installation, plug on spring holding bracket in such a manner that the spring holding bracket points horizontally forward when the engine hood is closed.

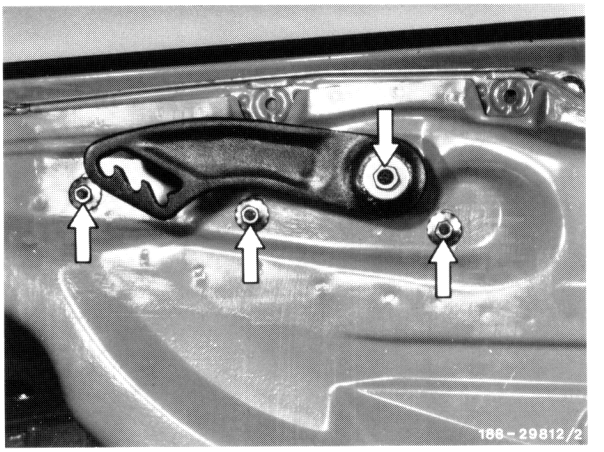

Shown with front fender removed

6 For installation proceed vice versa.

Removal, installation

1 Loosen screw on handle, pull handle toward the rear and remove.

2 Disconnect engine hood control cable on handle.

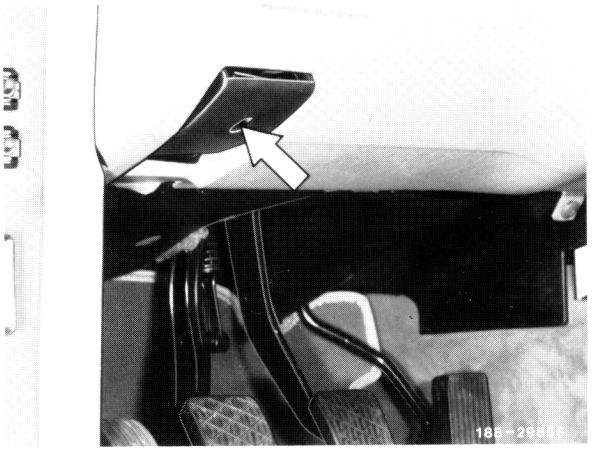

3 Tie cord to engine hood control cable.

Note: The cord facilitates installation.

4 Expose engine hood control cable on wheelhouse (open cable strap and push out of holding clips).

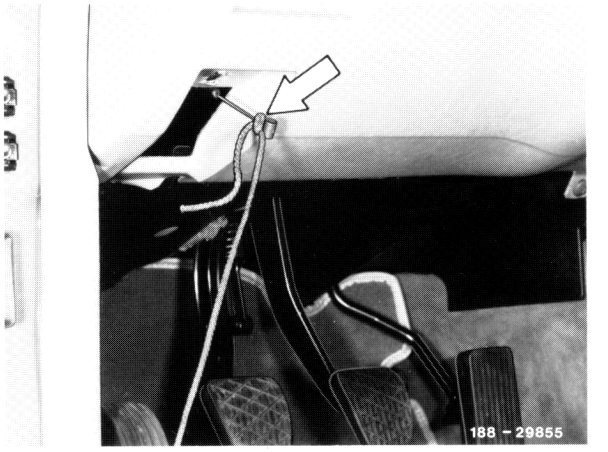

5 Force off holding bracket of rubber grommet and remove rubber grommet.

31017

6 Remove clips of cover under engine hood lock (burglar protection), while disengaging detent through hole in radiator reinforcement.

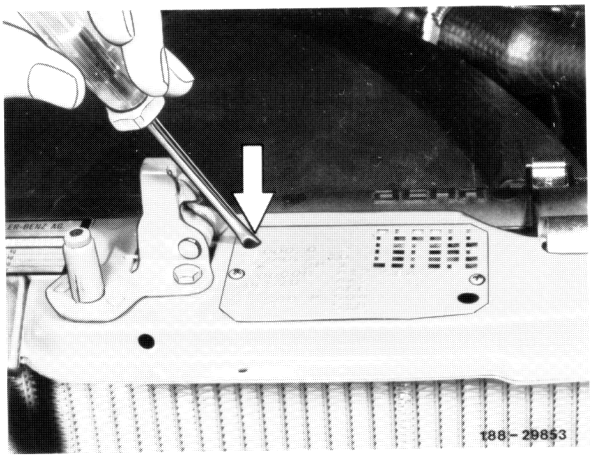

7 Disconnect engine hood control cable at lock.

8 Pull out engine hood control cable.

9 Grease rubber grommet on new engine hood control cable and pull in cable control with cord.

10 For further installation proceed in reverse order.

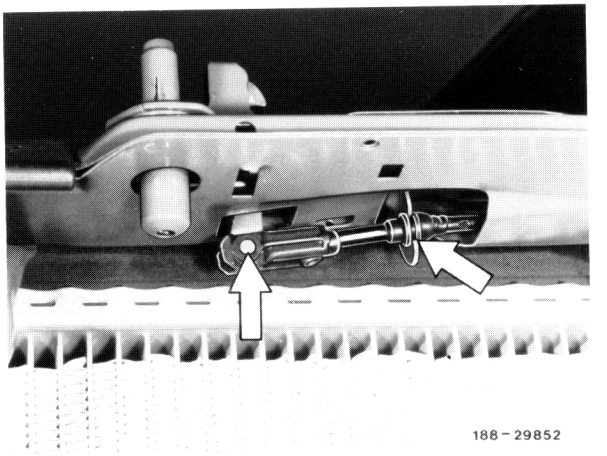

Caution!
Make absolutely sure that the locking hook in housing of engine hood lock can be easily operated and moved in outward direction up to stop.

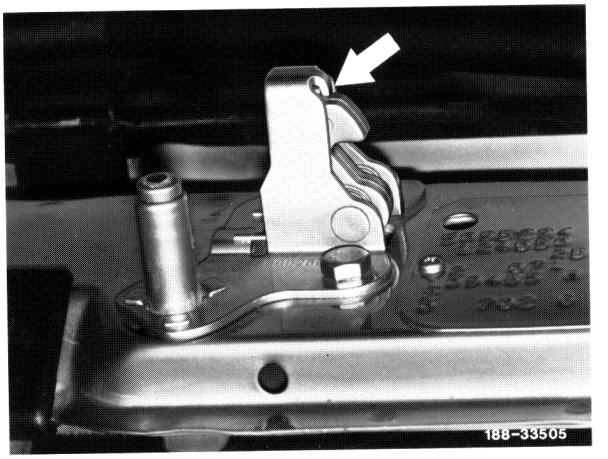

1st version (up to 06/93)

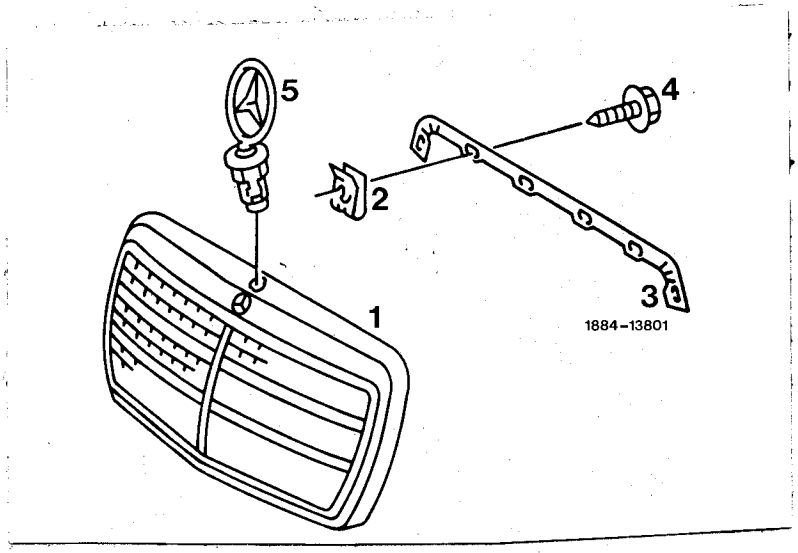

Engine hood	open, close.
Screws (4)	unscrew, screw in.
Radiator cowling (1)	remove, install.

Note
Glue backing (3) to engine hood before installing radiator cowling.

2nd version (as of 07/93)

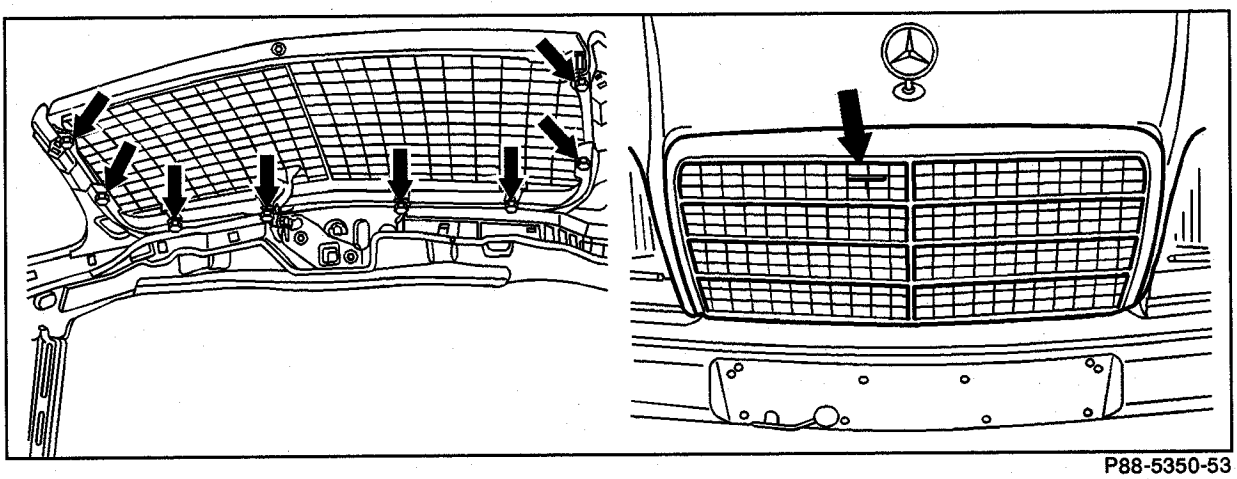

P88-5350-53

Engine hood	open.
Screws (arrows) on radiator cowling	unscrew.
Radiator cowling	remove from engine hood toward front.
	Note When installing insert handle (arrow) for safety catch into radiator cowling.
Reinstall	in opposite order.

88–401 Removal and installation of radiator grille

Radiator cowling removed (88–400)

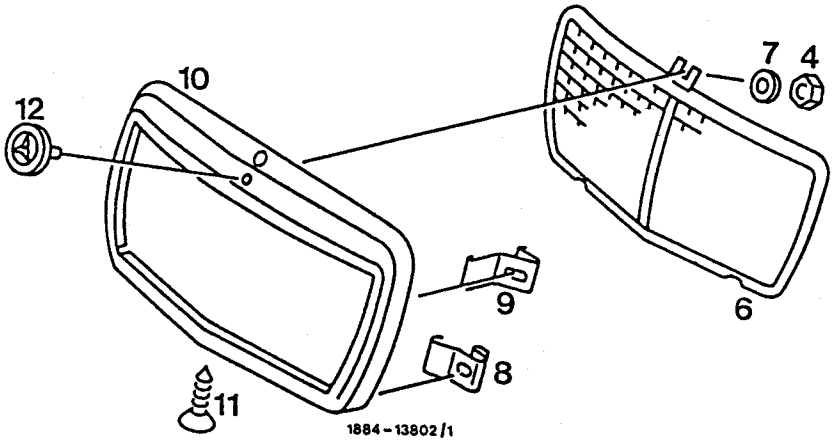

Plug-in clips (8 and 9)	force off at left and right **Caution!** plug-in clips are pre-tensioned
Screw (11)	unscrew, screw in
Nut (4) and washer (7)	unscrew, screw in
Company symbol (12)	remove – mount
Grille (6)	remove, insert

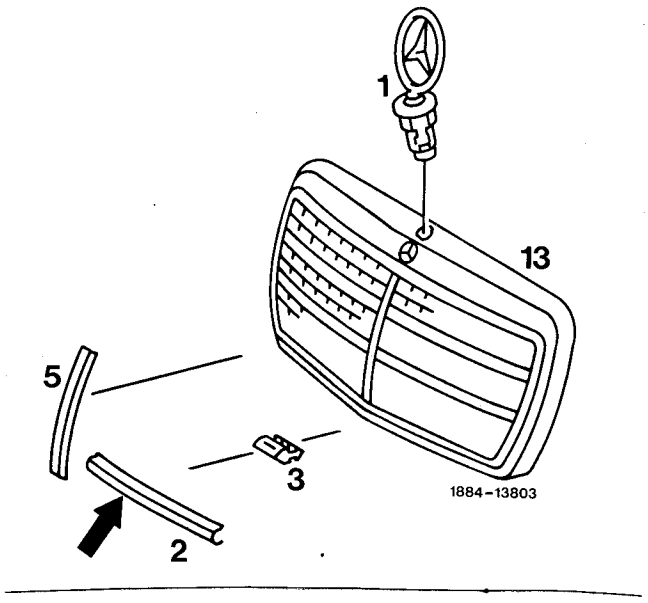

A. Removal and installation of undamaged trim strips

Radiator grille	remove (88–401).
Horizontal trim strips (2)	pull out 6 each in outward direction or slide in from outside
Vertical trim strip (5)	pull out in downward direction or slip in from below

B. Renewing damaged trim strips

Trim strip (2)	cut with side-cutting pliers (arrow) and pull out carefully from under radiator cowling
Plastic clip (3)	3 each, insert into new trim strip
Trim strip (2)	slip in and push plastic clips into holding projections on radiator grille
Vertical trim strip (5)	renew likewise and additionally cut off the holding projections on radiator grille

1st version (up to 06/93)

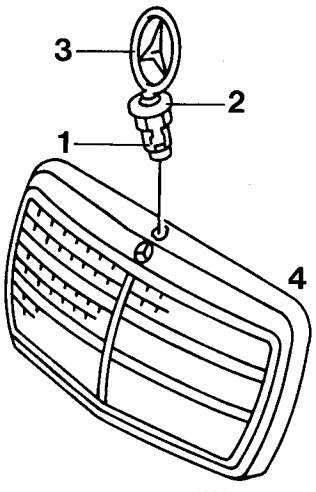

Engine hood	open.
Spring catch (1)	pull down with combination pliers and turn 90° to **left.**
Spring catch (1)	allow to catch in grooves in round cover plate (2).
Mercedes star (3)	pull upward completely out of radiator cowling (4).
Reinstall	in opposite order.

2nd version (as of 07/93)

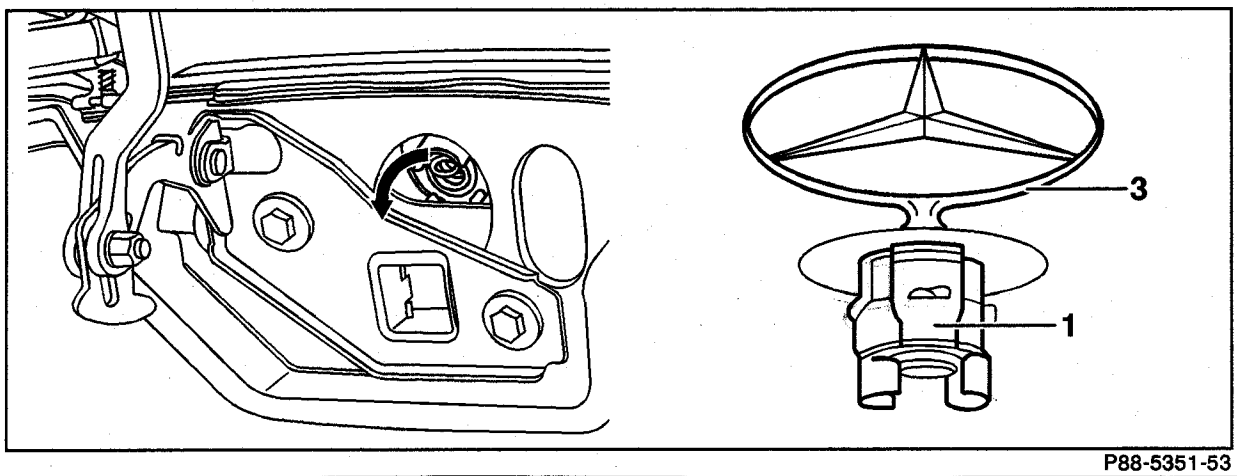

P88-5351-53

Engine hood	open.
Spring catch (1)	turn 90° to left with flat pliers.
Mercedes star (3)	remove upward out of engine hood.
	Note Avoid damaging paint. When installing observe correct installation position (lettering should be legible from front)
Reinstall	in opposite order.

A. Sedan and coupe

Removal

1 Pull electrical connections from licence plate lamp units and expose connecting cable in area of trunk lid.

2 Force off covers above mounting bolts.

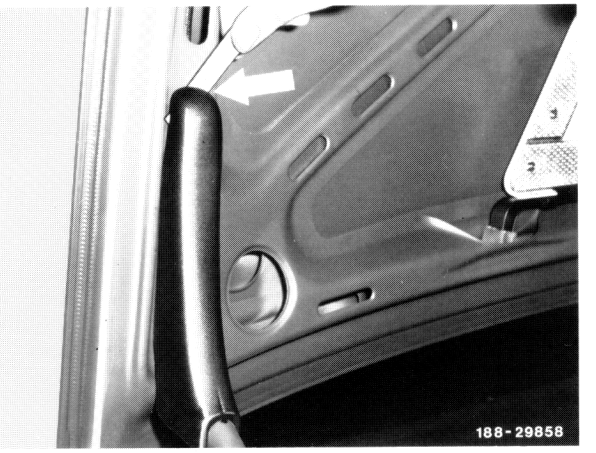

3 Loosen rear screw on hinge and completely unscrew front screw.

4 Remove trunk lid.

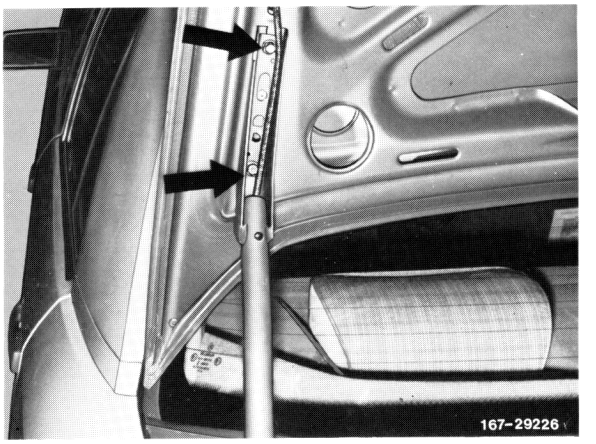

Installation

5 Mount trunk lid with rear screw on hinge and screw in front screw.

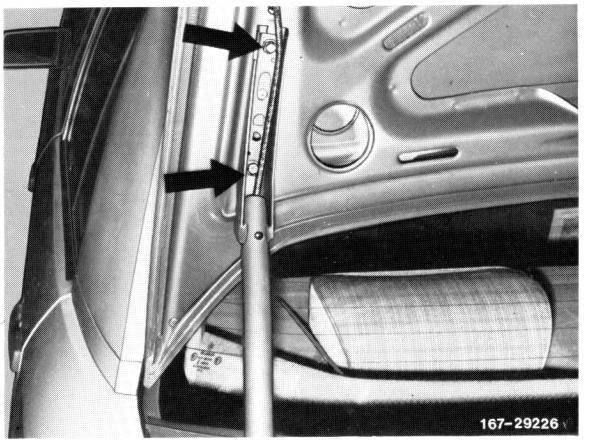

6 Align trunk lid and tighten screws.

7 Install connecting cable for licence plate lamp units and connect.

8 Adjust trunk lid, if required (88–520).

Note: When replacing trunk lid, perform specified sealing and preservation measures (97–400 or 91–150).

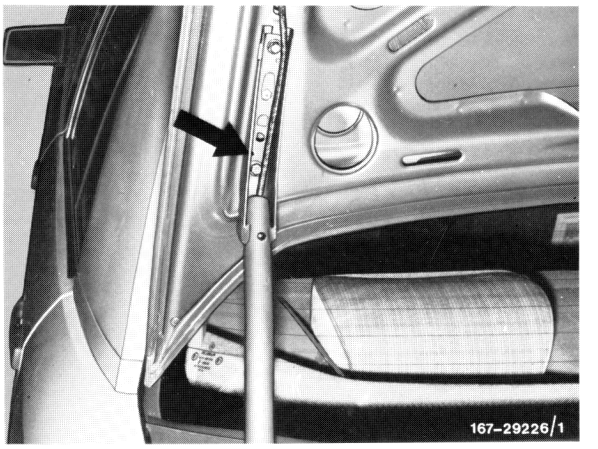

B. Cabriolet

1 Remove warning triangle on trunk lid.

2 Unclip holder for warning triangle on trunk lid.

3 Remove trunk lid cover.

4 Disconnect electrical connections on licence plate lamps.

5 Expose connection cable in area of trunk lid.

6 Mark installation position of hinge levers in relation to trunk lid to facilitate reassembly.

7 Screw out bolts (1) on left and right (4 each).

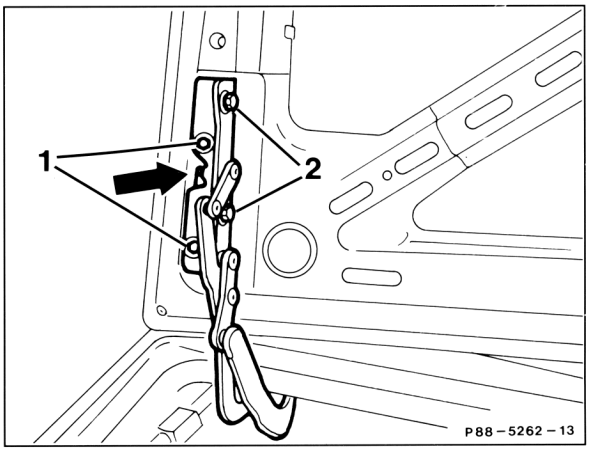

1 Bolt for longitudinal adjustment
2 Bolts for height adjustment

8 Lift trunk lid upward out of arresting hooks (arrow) with help of second person and lay down on suitable surface.

9 Reinstall in opposite order.

10 Adjust trunk lid height with screws (2).

Note
For further adjustment measures see 88–520.

⚠
When replacing the trunk lid perform specified sealing and preservation measures (97–400 or 97–150).

88–505 Attachment of model designation on trunk lid

Note

Clip version: When renewing trunk lid, drill the 4 holes (on model 200 three) prior to painting.

Glued version: When using the glued version, these parts will be available as spare parts only.

Clip version

1 Mark bores according to drawing, center-punch and drill, dia. 5.7 + 0.1 mm.

2 Remove drilling swarf and treat hole edges with zinc dust paint.

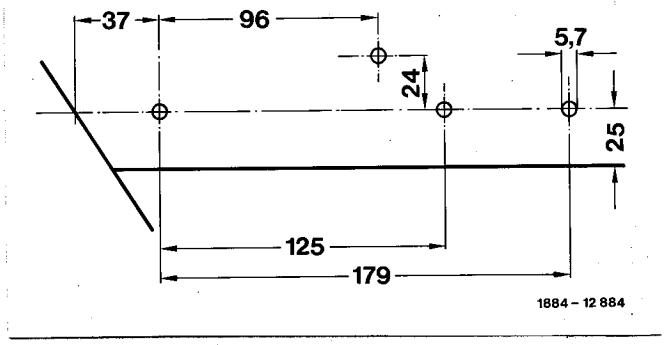

Glued version

3 Heat model identification and glueing surfaces to approx. 40 °C (heat radiator, hot air blower or the like).

4 Position model identification according to drawing and press on.

Note: If a model identification is glued on a trunk lid with holes, check these holes for leaks and seal from inside with an MB sealing cord or MB body sealing compound, if applicable.

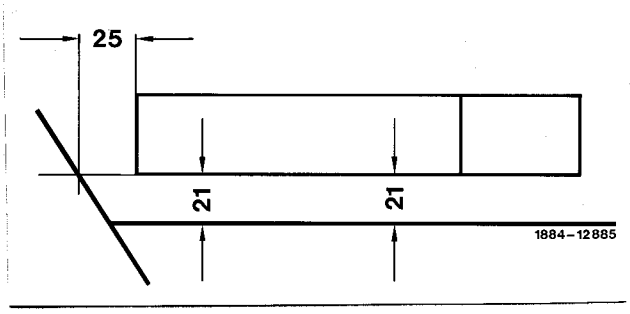

88–512 Removal and installation of hinge lever on trunk lid and soft top compartment cover

A. Sedan and coupe

(Hinge lever on trunk lid)

Preliminary work:
Trunk lid removed (88–500).
Parcel shelf removed (68–458).

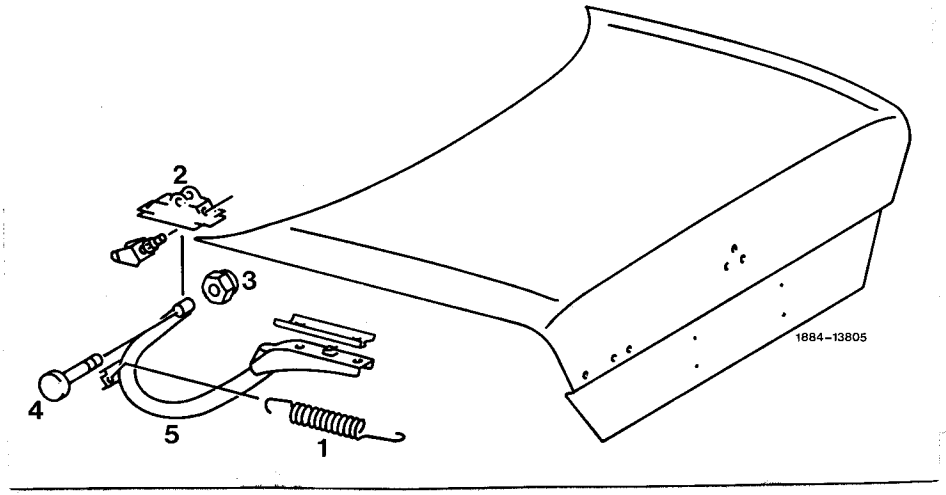

Spring (1)	remove and install
Damping (2) above bearing bracket	release, glue in
Nut (3)	unscrew and screw on
Bolt (4)	remove and install
Hinge lever (5)	remove and install
Trunk lid	adjust (88–520)

B. Cabriolet

(Hinge levers on trunk lid and soft top compartment cover)

Preliminary work:
Trunk lid removed (88–500).
Soft top compartment cover removed (88–600).

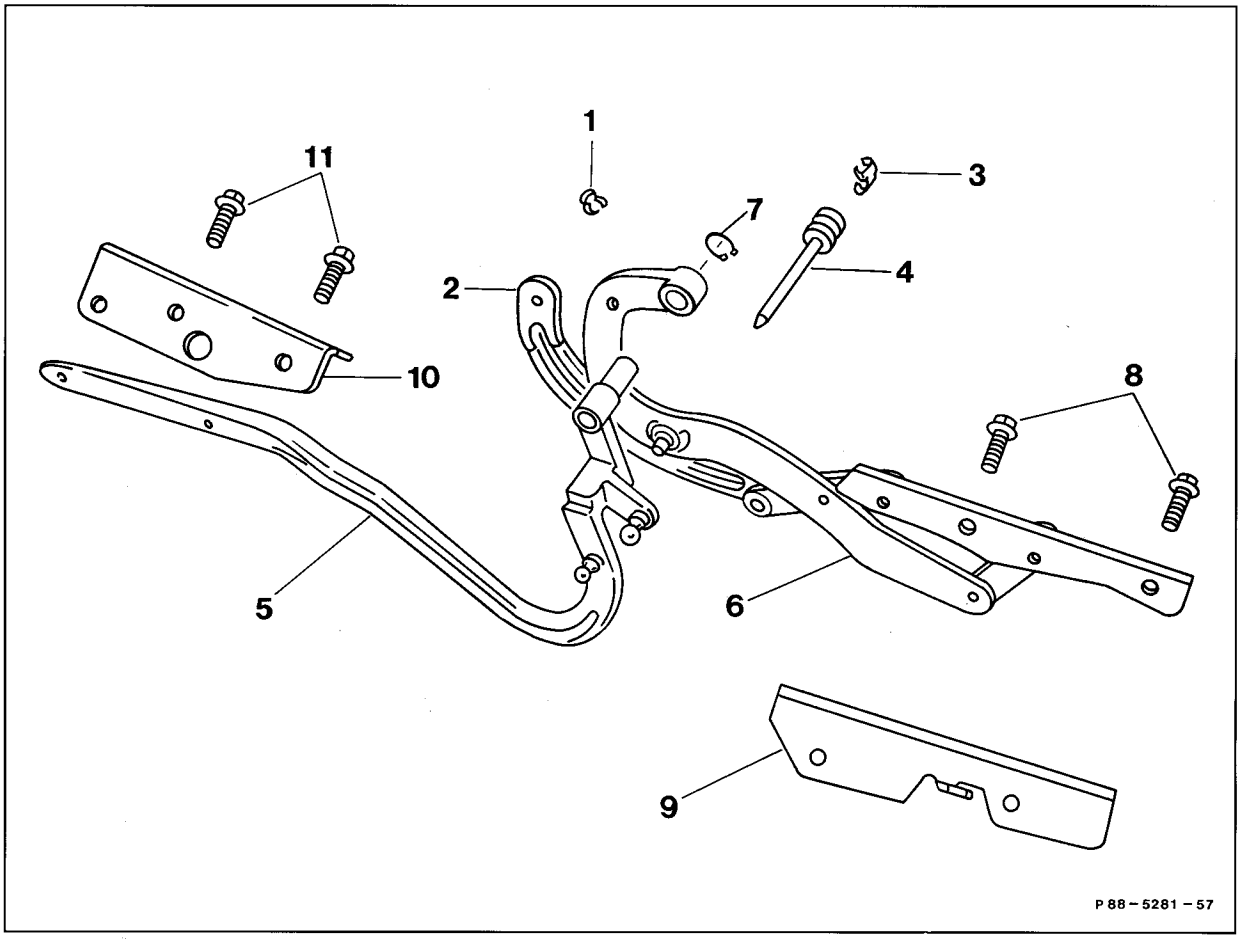

1	Lining in trunk and soft top compartment	partially remove.
2	Cover (13), ...	remove,
	for this purpose	unscrew 2 screws (12)
	and lay wiring harness down in trunk.	
3	Gas spring (14) for trunk lid and (15) for soft top compartment cover	unhook from hinge lever.
	For this purpose unclip retainers on ball sockets.	
4	Piston rod (16) of hydraulic cylinder for soft top compartment cover	unhook from hinge lever.
	For this purpose unclip retainer on ball socket.	
5	Retainer (1) on lever (2)	remove.
6	Lever (2)	unhook.

7	Retainer (3) on pin (4)	remove.
8	Pin (4)	remove.
9	Complete hinge lever	remove through trunk.
10	Hinge lever (5) for soft top compartment cover and hinge lever (6) for trunk lid	can be replaced separately after removing the retainer (7).
11	Reinstall	in opposite order.

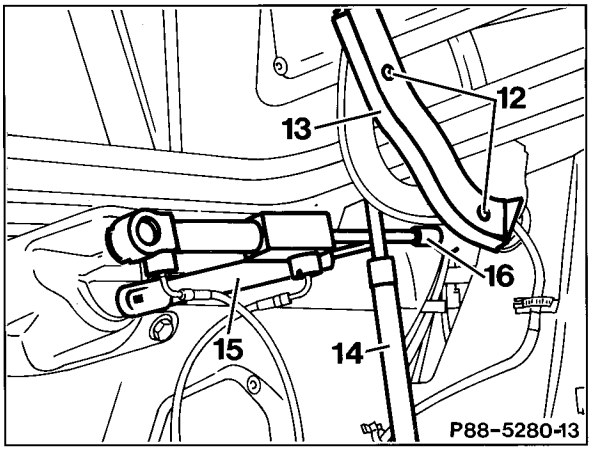

12 Screws
13 Cover
14 Gas spring (trunk lid)
15 Gas spring (soft top compartment cover)
16 Piston rod

A. Adjusting in longitudinal direction

1 Force off covers above fastening screws.

2 Loosen screws on hinge left and right.

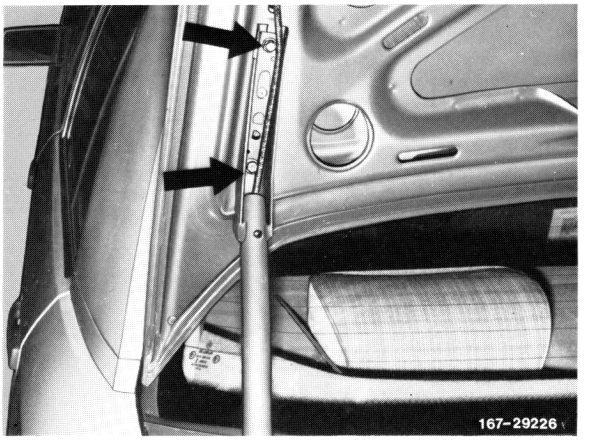

3 Loosen screws on closing eye of trunk lid.

4 Adjust trunk lid in such a manner that the rear edge of the cover is flush with rear fender.

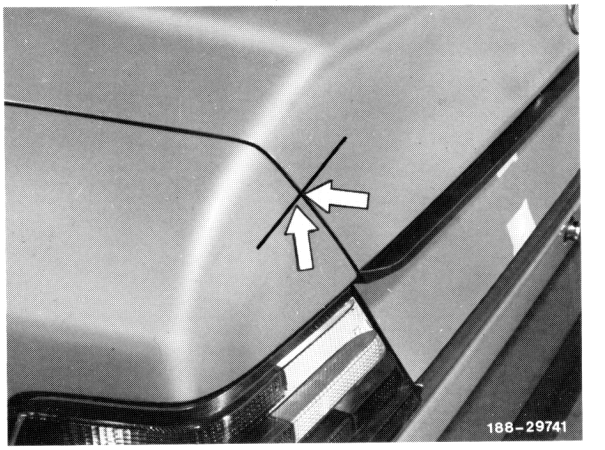

5 Tighten screws on hinge left and right.

6 Adjust closing eye in such a manner that the lock engages properly.

7 Tighten screws on closing eye.

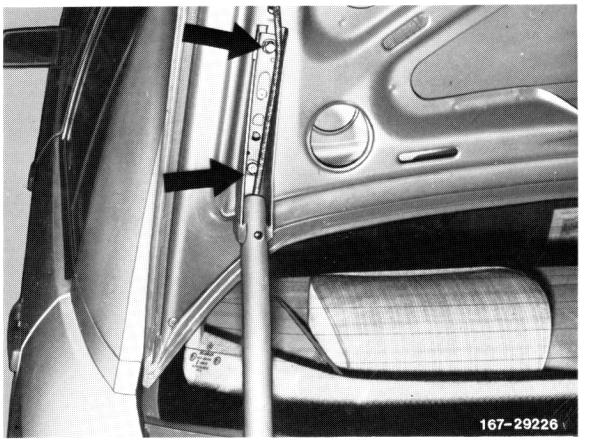

B. Adjusting in height

1 Adjust front edge of trunk lid by aligning hinge lever in height in such a manner that the outer edge of the trunk lid is flush with rear fender.

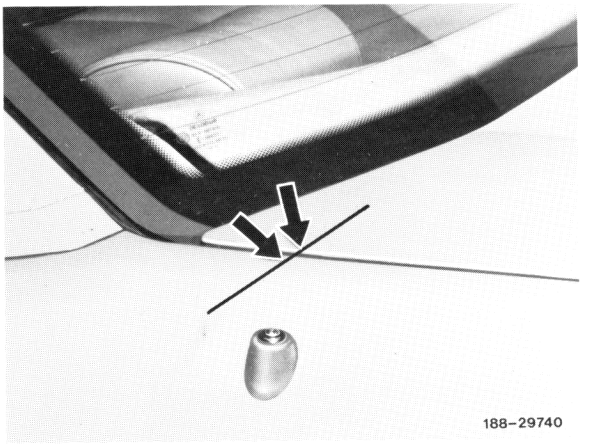

2 Loosen depth stop left and right and slide completely upward.

Note: Stop may be glued down with the seal and must be released from there.

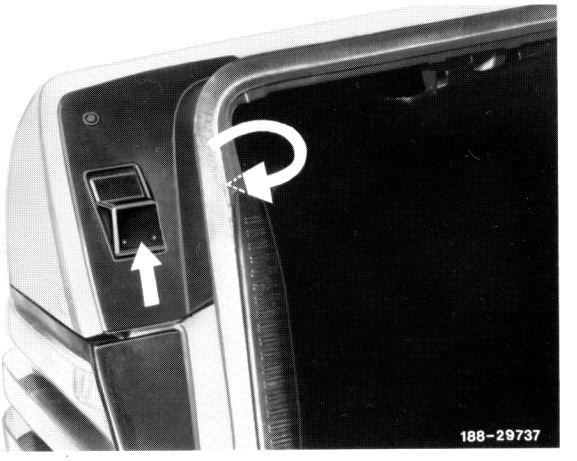

3 Loosen fastening screws of trunk lid lock and move lock in downward direction.

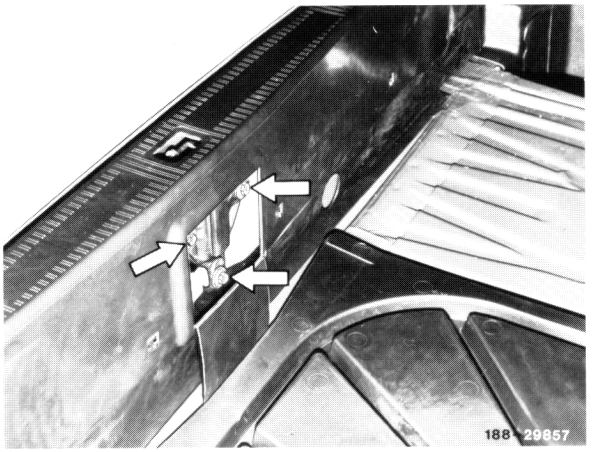

4 Close trunk lid and push down at the rear until the trunk lid upper edge is flush with rear fender.

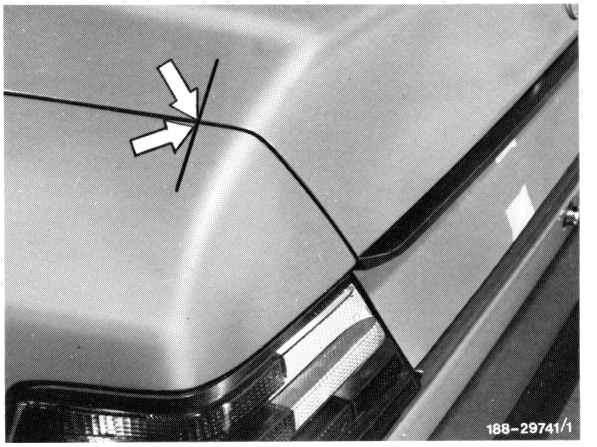

5 Tighten depth stop left and right.

6 Adjust trunk lid lock in such a manner that the trunk lid is perfectly closing.

7 Tighten screw on trunk lid lock.

C. Adjusting during rear end repairs

1 During repairs of rear end which require removal of parcel shelf, an additional height and length adjustment is possible on bearing bracket of hinge lever by means of eccentric bolt.

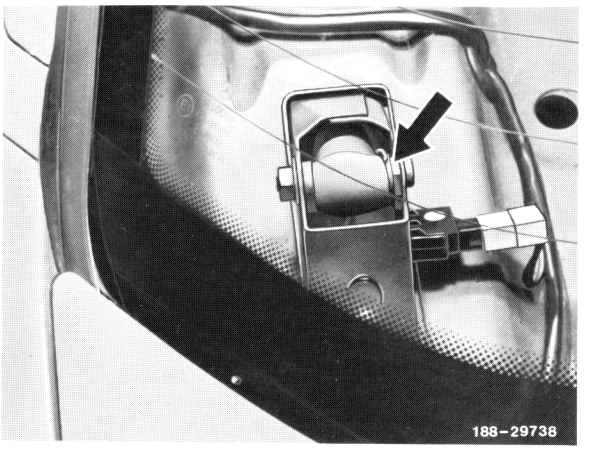

88–600 Removal, installation and adjustment of soft top compartment cover (convertible)

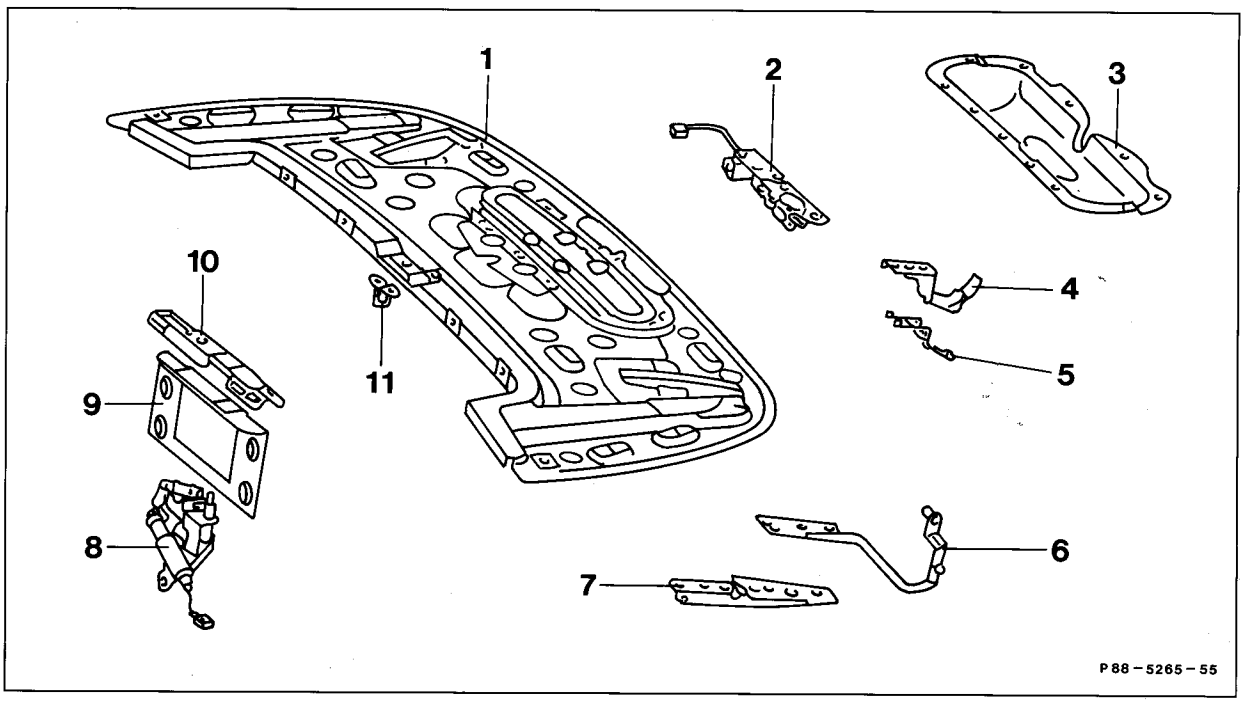

Trunk lid	cover with protective cover to avoid damage to paint when removing the soft top compartment cover.
Soft top compartment cover (1)	open.
Position of hinge levers	mark on soft top compartment cover to facilitate reinstallation.
Screws on cover (3)	remove (11 each).
Cover (3)	remove.
Expanding rivets on cover (5)	unclip (2 each).
Cover (5)	remove.
Screws on catch (2)	screw out (4 each).
Catch (2)	lay down in soft top compartment with lines connected.
Soft top compartment cover	have second person hold in position.
Nuts on hinge lever	unscrew (6 each).
Soft top compartment cover (1)	remove with help of second person.
Reinstall	in opposite order.
Adjustment of soft top compartment cover (1)	check, adjust, if required.

Removal, installation, adjustment

1 Cover trunk lid with protective cover to avoid damage to paint when removing the soft top compartment cover.

2 Open soft top compartment cover (1).

3 Mark position of hinge levers on soft top compartment cover to facilitate reinstallation.

4 Unscrew screws (arrow) in cover (3) (11 each), remove cover (3), then unclip expanding rivets (12, 2 each) in cover (5) and remove cover (5).

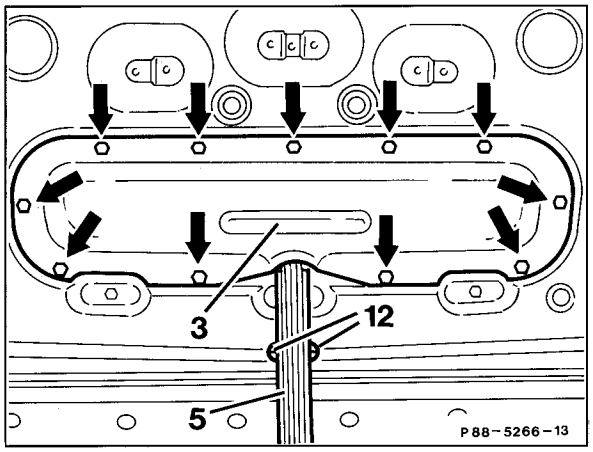

5 Unscrew screws (14, 4 each) on soft top catch (2), lay catch (2) down in soft top compartment with lines connected.

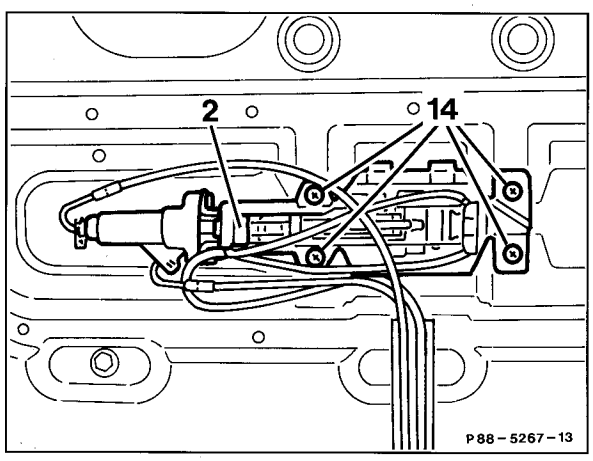

6 Hold soft top compartment cover (1) in position with second person. Unscrew nuts (15) on hinge lever (6 each) and remove soft top compartment cover (1) with help of second person.

7 Reinstall in opposite order.

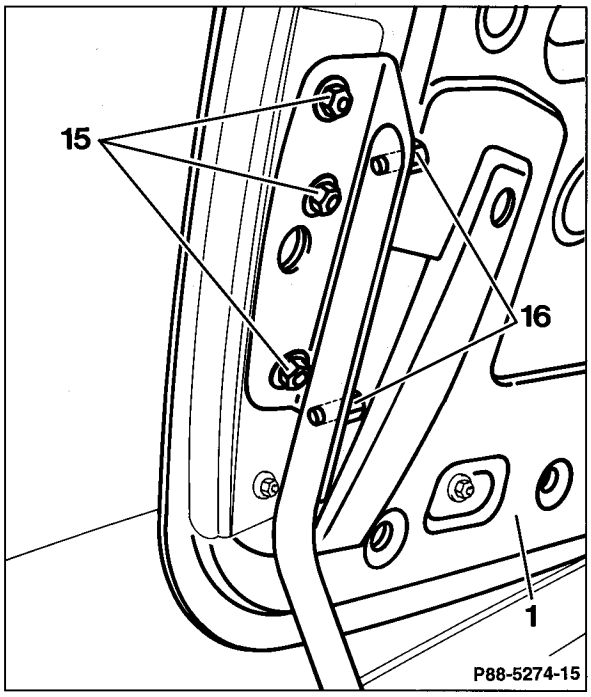

Adjustment

8 Center soft top compartment cover so that the gap is uniform all the way around and it is flush with the soft top compartment (check with soft top closed).

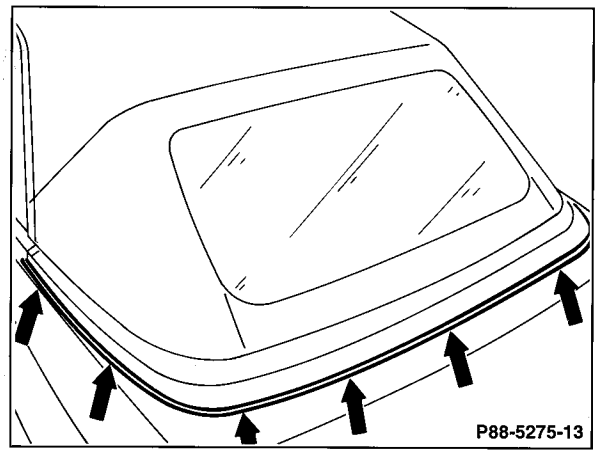

9 Adjust in longitudinal direction with nuts (15) and height with screws (16) on hinge lever. Adjust height **at front** with soft top compartment catch.

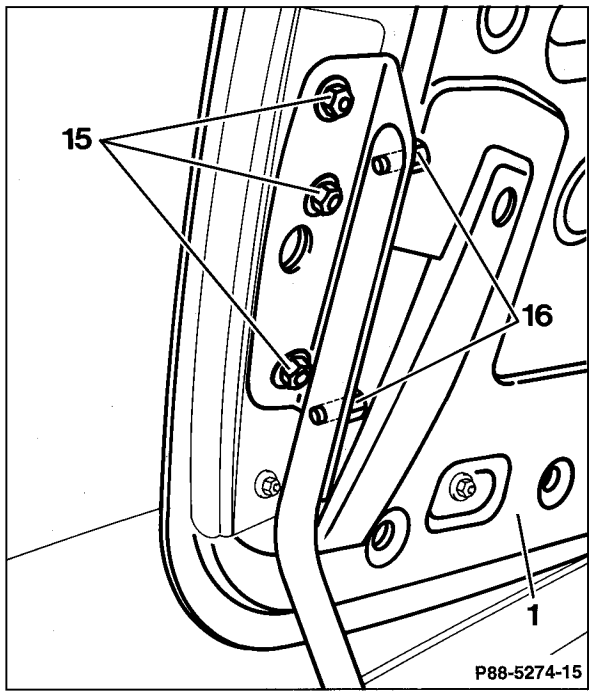

10 Adjust height at rear **at center** in area of soft top catch. When the soft top is put up and the soft top compartment cover (1) closed it should be approx. 1 mm lower than the soft top compartment (17).

The tension force on the soft top ensures that it is flush when the soft top is closed.

The height can be adjusted in the trunk on the rear wall of the soft top compartment after partially removing the lining in the trunk. Loosen nuts (20) and adjust height of soft top compartment cover with stop (19).

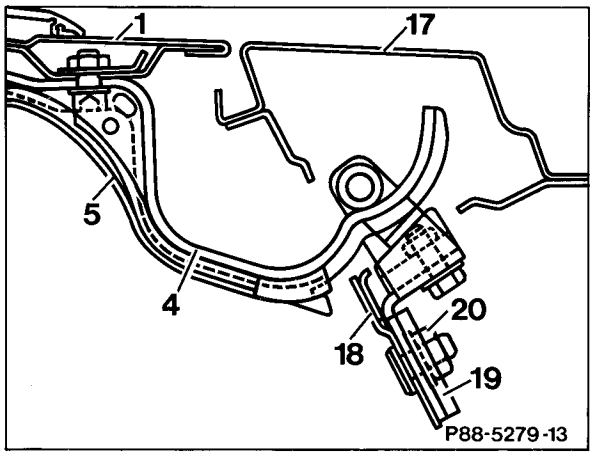

A. Sedan

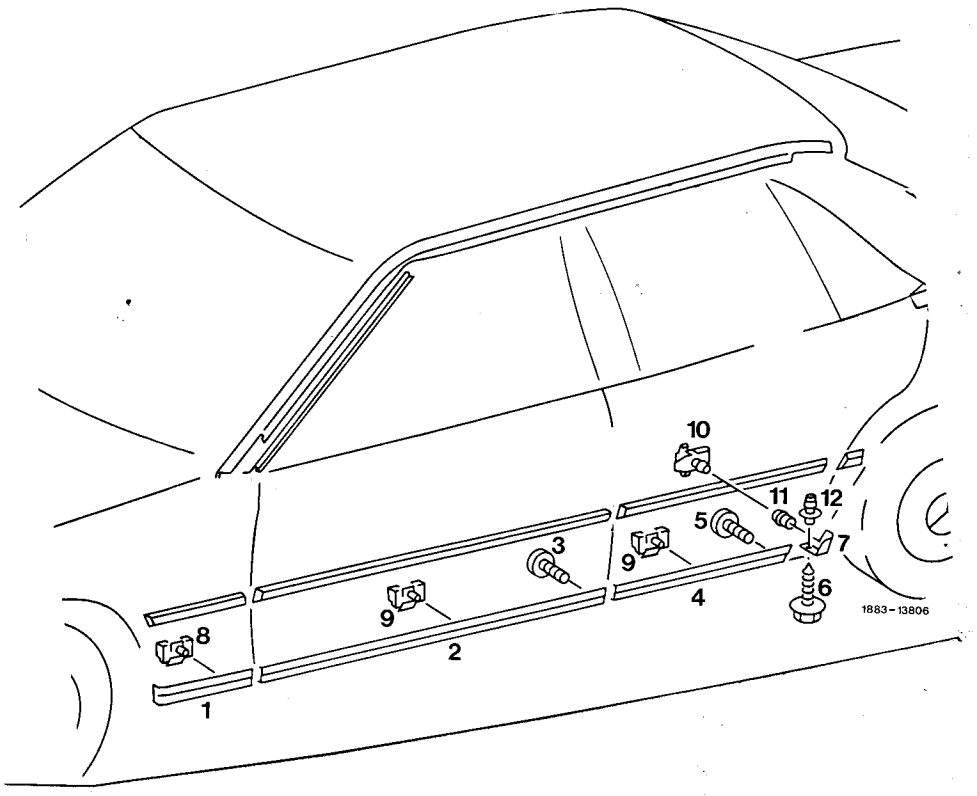

Trim (1) on front fender	press off with plastic wedge, renew clips (8) if required, press on
Screw (3)	unscrew, screw in
Trim (2) on driver's door	press off with plastic wedge from above, renew clips (9), if required, press on
Screw (5)	unscrew, screw in
Trim (4) on rear compartment door	press off with plastic wedge from above, renew clip (9), if required, press on
Screw (6) on wheelhouse trim	unscrew, screw in
Trim (7) on wheelhouse	press off with plastic wedge, renew clip (10), dowel (11, 12), if required, press on

B. Coupe

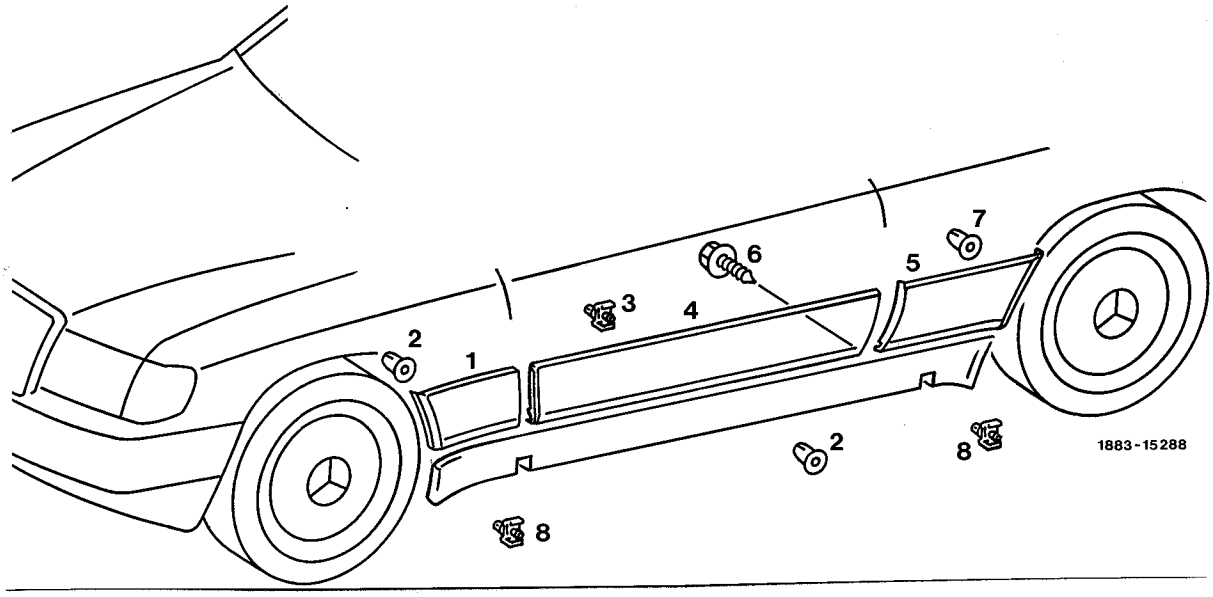

Trim panel (1) on front fender	pull off at bottom first, then at top and remove.
Driver's door	open.
Screw (6)	unscrew
Trim panel (4) on door	press off at bottom, pull toward **rear** and remove.
Trim panel (5)	pull off at bottom first, then at top and remove.
Clips (3 and 8) and clip bottom section (2 and 7)	check before installing trim panels (1, 4 and 5) and replace mounting parts, if damaged.

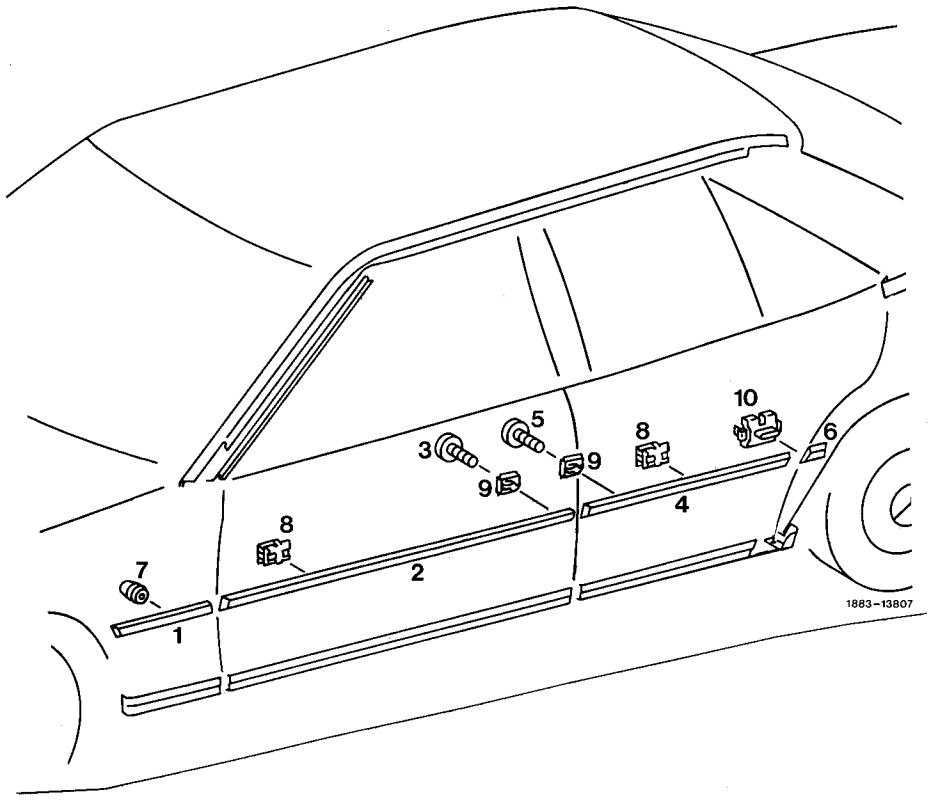

Protective strip (1) on front fender	press off with plastic wedge from below, renew dowel (7), if required, press on
Screw (3) on driver's door rebate	unscrew, screw in
Protective strip (2)	pull off toward the rear, renew clip (8), dowel (9), if required
Screw (5) on rear door rebate	unscrew, screw in
Protective strip (4)	push forward and remove, renew clip (8) and dowel (9), if required
Protective strip (6) on wheelhouse	press off with plastic wedge, renew clip (10), if required, press on

88–830 Removal and installation of trim on frame side member (coupe)

Trim above entrance removed.
Trim at side panelling removed (88–800).

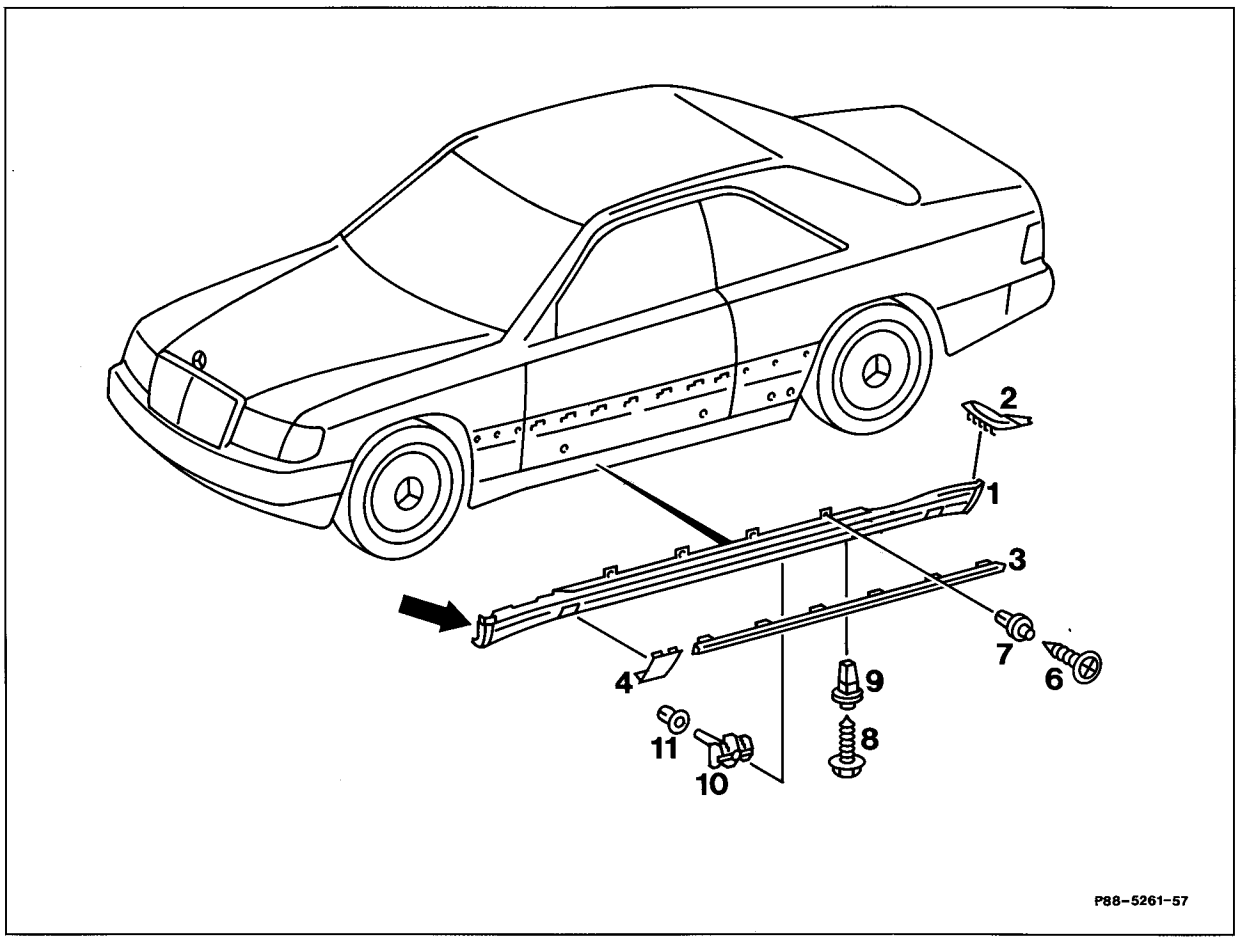

Screw (6)	screw out (4 each).
Screw (8)	screw out (10 each).
Trim panel (1)	pull out of clip bottom section (11).
Panel (1)	remove together with sealing tubing (3) and cover (2).
Before installing the trim panel (1)	check clips (10) and clip bottom sections (11) and replace, if required.
Sealing tube (3)	clip onto trim panel (1).
Plastic expanding anchors (7 and 9)	insert with MB universal sealant.
Cover (2)	clip into trim panel (1).

When installing the trim panel (1)	first attach at rear along wheelhouse and simultaneously insert clips (10, 10 each).
Trim panel (1)	hook into clip bottom section (11) from front toward rear. Ensure that the inner fender at the front is positioned **below** the trim panel (1, arrow).
Screws (6 and 8)	screw in.
Side wall panelling and panelling below entry	install.

88–855 Removal and installation of water deflector on front wall pillar and on roof

Removal

1 Protect front fender and engine hood with adhesive tape against paintwork damage.

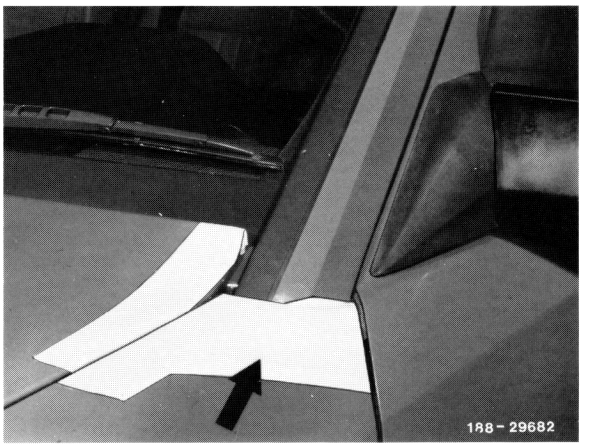

2 Push water deflector in upward direction out of 6 plug-in clamps starting at the rear.

Note: Position assembly wedge at edge of roof channel (risk of damage).

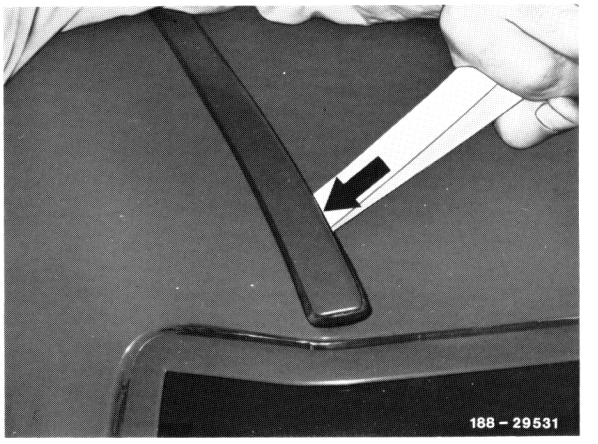

3 Pull water deflector manually out of 4 plug-in clamps in range of front wall pillar.

4 Remove water deflector.

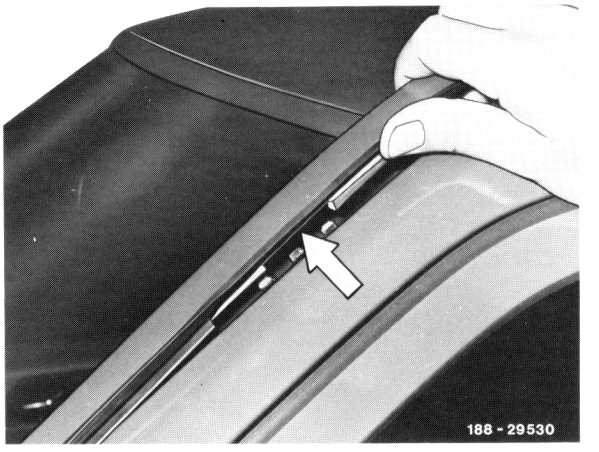

5 Mark installation position of plug-in clamps in roof channel and remove with pointed pliers.

Note: When re-using the removed water deflector, insert new plug-in clamps approx. 5 mm adjacent to former spot in roof channel.

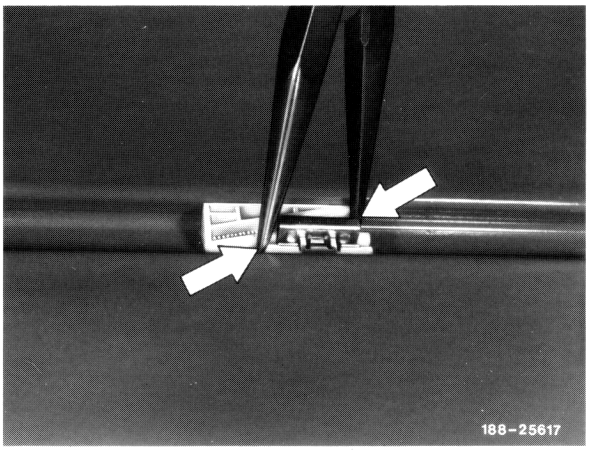

Installation

6 Insert new plug-in clamps starting from the rear and align.

Position of plug-in clamps (dimension measured to center of clamp).

Dimensions
a 90 mm
b 120 mm
c 165 mm

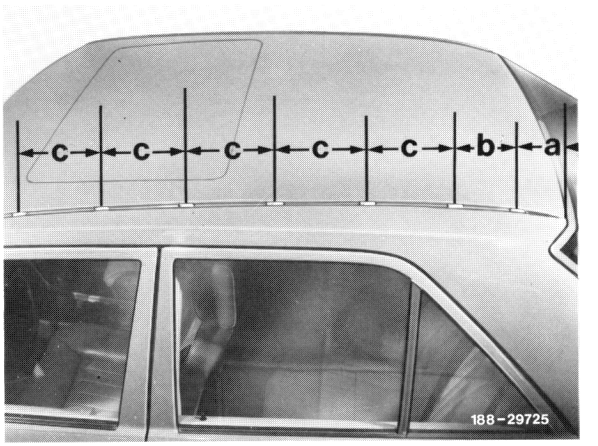

Note: The rear plug-in clamp has an additional holding lug in center.

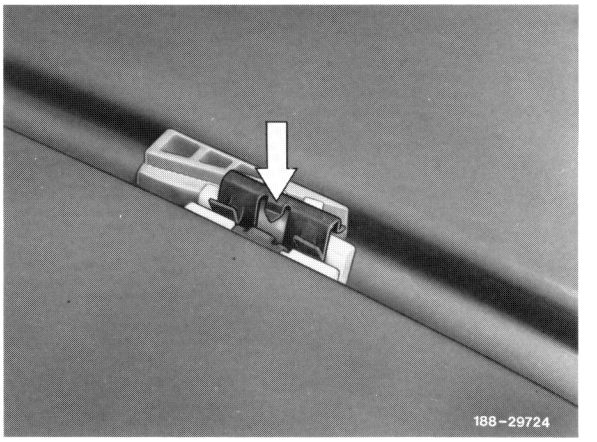

7 Install plug-in clamp with water pump pliers. For this purpose, compress holding part of plug-in clamp until an adequate preload in roof channel is attained.

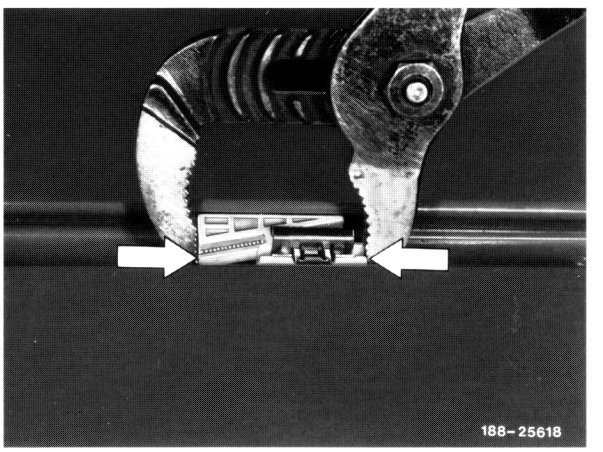

85512

8 Align white sectional parts on water deflector in such a manner that they are not resting against plug-in clamps.

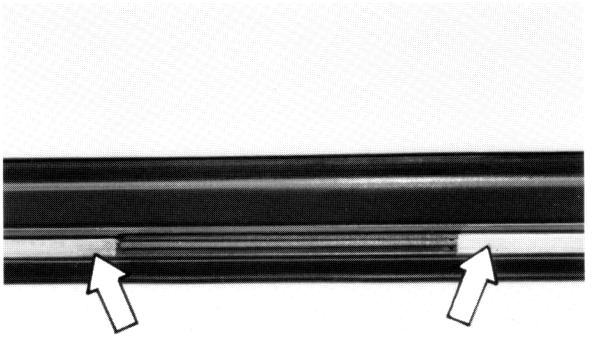

188-25606/1

9 Position water deflector and introduce front end under front fender.

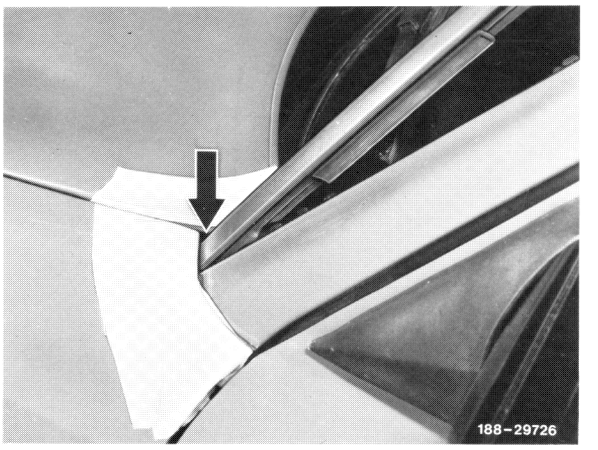

10 Align water deflector in longitudinal direction and push into plug-in clamps, starting from the rear. For this purpose, use a suitable strip of wood (approx. 150 mm long) and a rubber hammer.

Dimension:
d approx. 4 mm

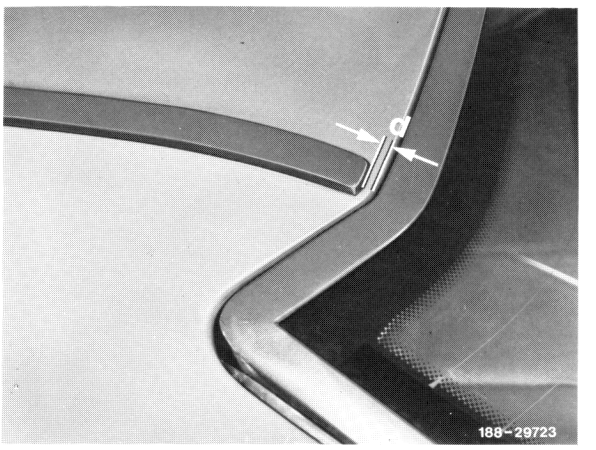

11 Push water deflector in area of front wall pillar into plug-in clamps by means of ball of thumb and pull off adhesive tape.

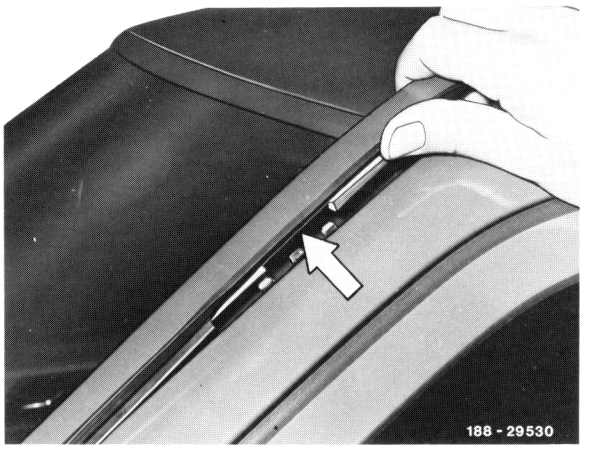

88–860 Removal and installation of sectional sealing strip on roof frame (coupe)

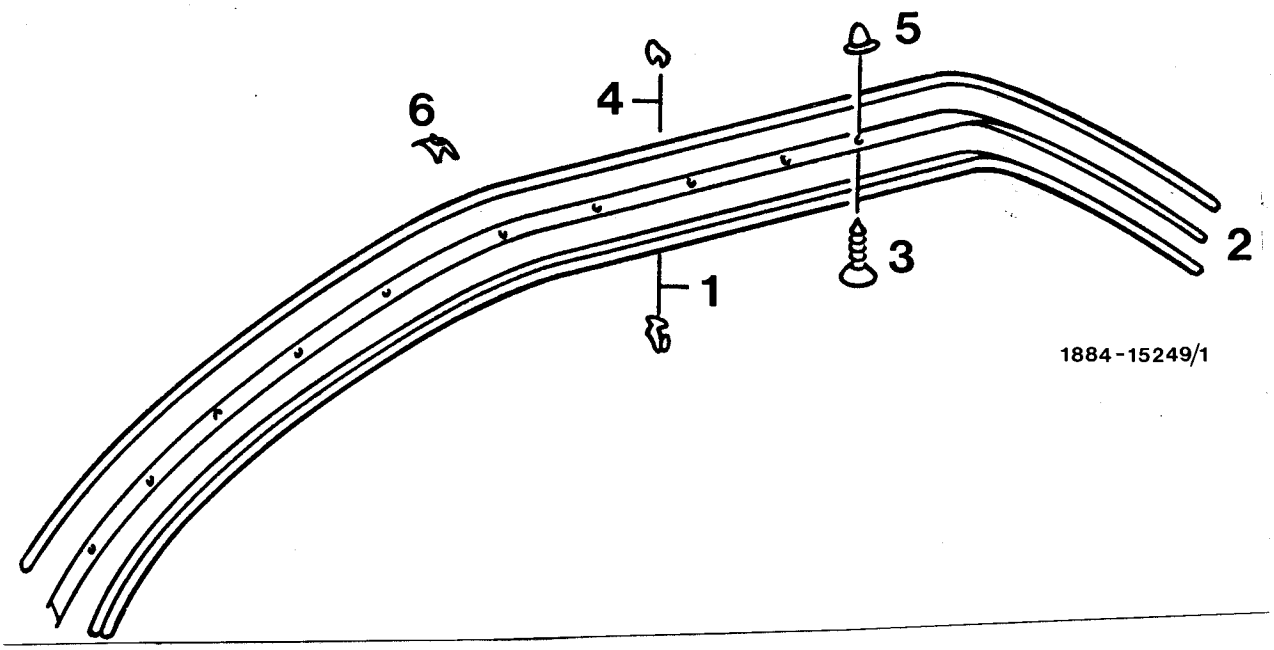

Rear side window and driver's door	open
Trim strip, outside on rear side window	mask
Door edge protection	remove
Sectional sealing strip (1) of holding rail (2)	pull out. Moisten with soap solution during installation.
Sheet metal clip (6) of holding rail (2)	remove
Screws (3)	unscrew
Holding rail (2) with support (4)	remove. Pay attention to note.
Dowel (5) in roof frame	renew, if damaged

Note

For repainting in range of front wall pillar, roof frame and rear pillar, support (4) can be pulled out of holding rail (2).

Installation

1 Glue Moltopren strip on contact surface of holding rail.

2 Renew damaged plastic dowel pins on body.

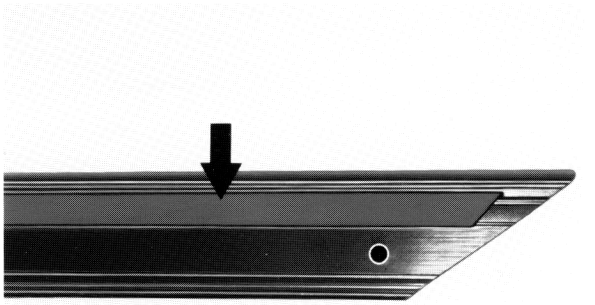

188-34665

3 Screw on holding rail with support, ensuring that support layer between holding rail and roof frame is properly positioned.

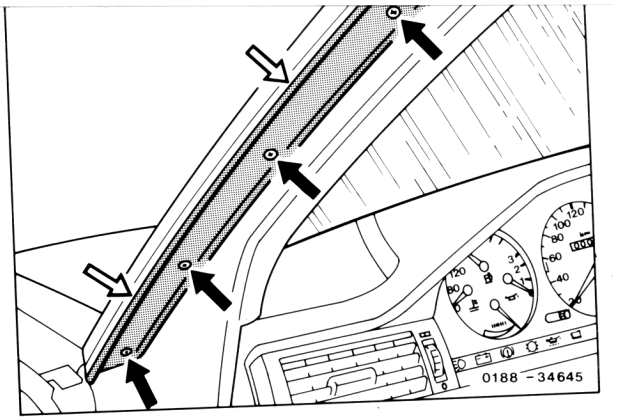

0188-34645

4 Insert sheet metal clip into holding rail (bore at level of rear edge of crank window).

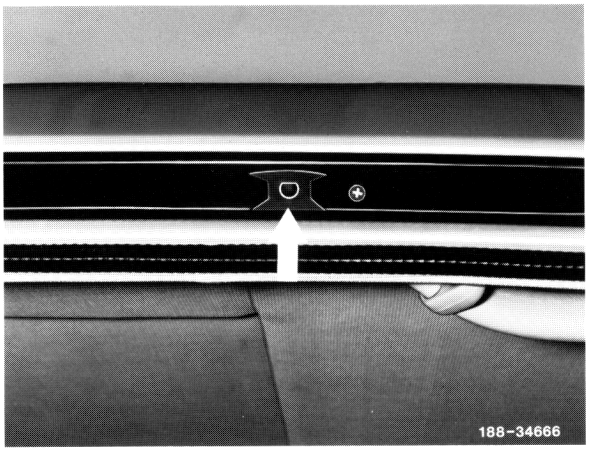

188-34666

5 Position sectional sealing strip with contact surface against center of sheet metal clip, then push in sealing profile strip first toward the rear, then forward into holding rail using plastic wedge for this purpose.

Note: For easier assembly of sectional sealing strip, coat holding rail with soap solution.

6 For further installation proceed in reverse order.

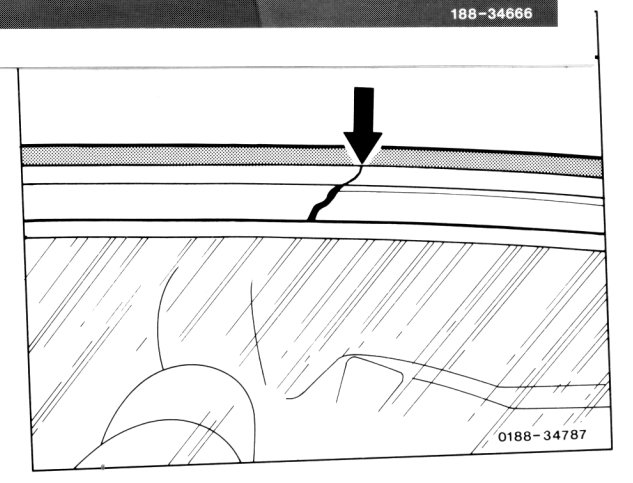

0188-34787

86012

Note

If the outside rear view mirror is continually moving out of adjustment, tighten screw on adjusting mechanism accordingly.

Note: Screw is under cover plate.

A. Mirror glass

Removal, installation

1 Force out mirror glass with plastic wedge and remove to the side.

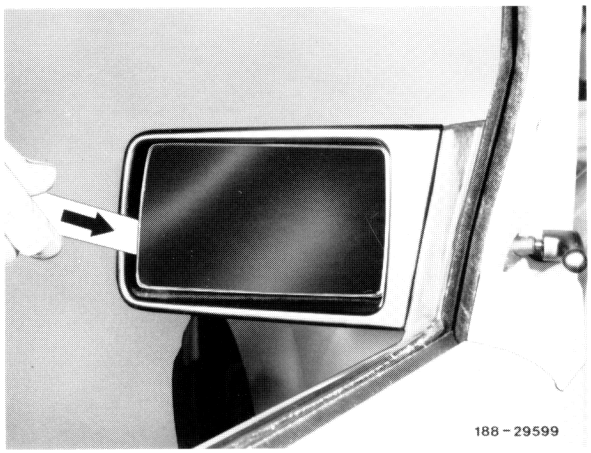

2 Position mirror glass against adjusting lever and force into mounting points.

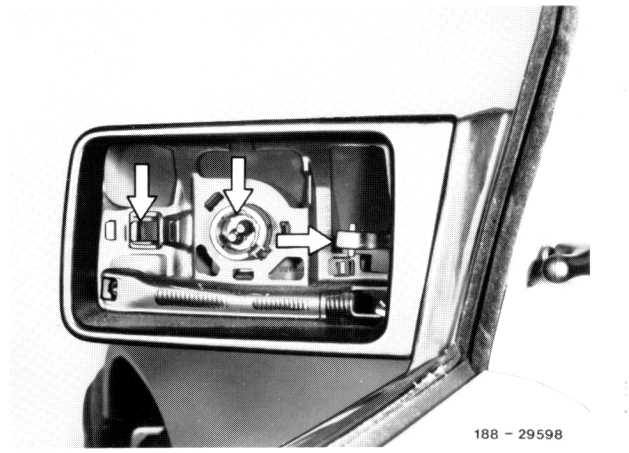

B. Complete outside mirror

Removal, installation

1 Push plastic lock with screwdriver out of grip and remove grip.

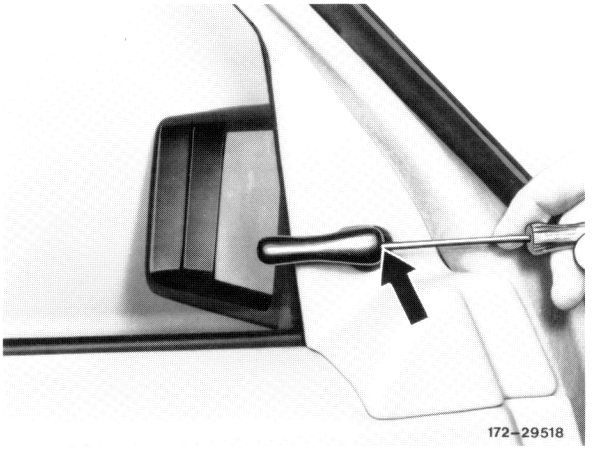

2 Unclip cover plate at top out of door frame and pull out of door trim in upward direction.

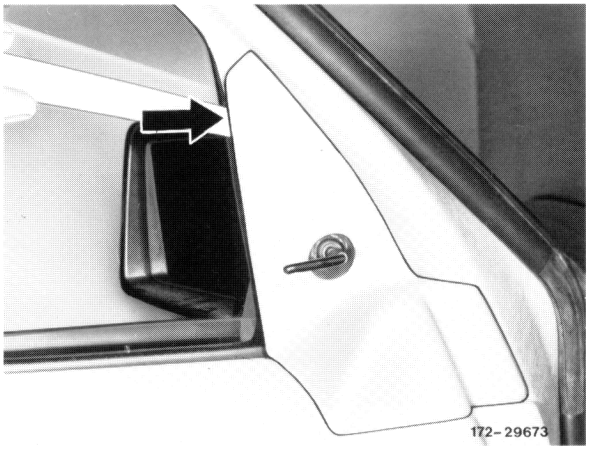

3 Remove screws and take off mirror.

4 For installation proceed in reverse order.

90012

Inspecting safety belts for damage

9150

All models

Pull belt out completely and check for cut fibers and other damage such as burnt spots caused by cigarettes.

Check that automatic reel functions correctly.

Check locking function by pulling belt out quickly.

Check belt strap for twisting.

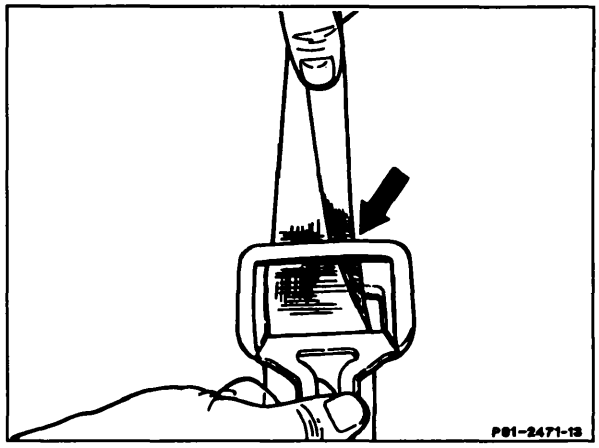

Note: If customer complains that belt does not roll up neatly, check whether belt is guided back manually as specified or whether it is twisted 180° behind panel caused by improper handling. Remove panel for this purpose.

If customer refuses replacement of damaged belt, this should be noted on repair order.

Backrest lock - check operation

9151

All cabriolet and coupes

- With engine idling and doors open, check that backrests are free to move forward.
- Close doors. Backrests should now be locked.
- With doors closed, backrest lock should release when pushing button (arrow) on side of backrest.

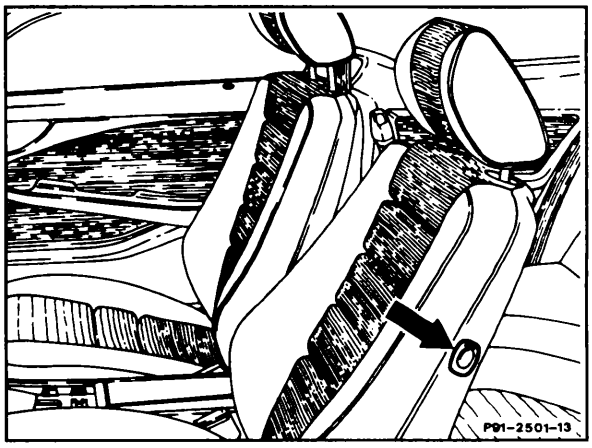

91–060 Removal and installation of adjusting rail for head restraint

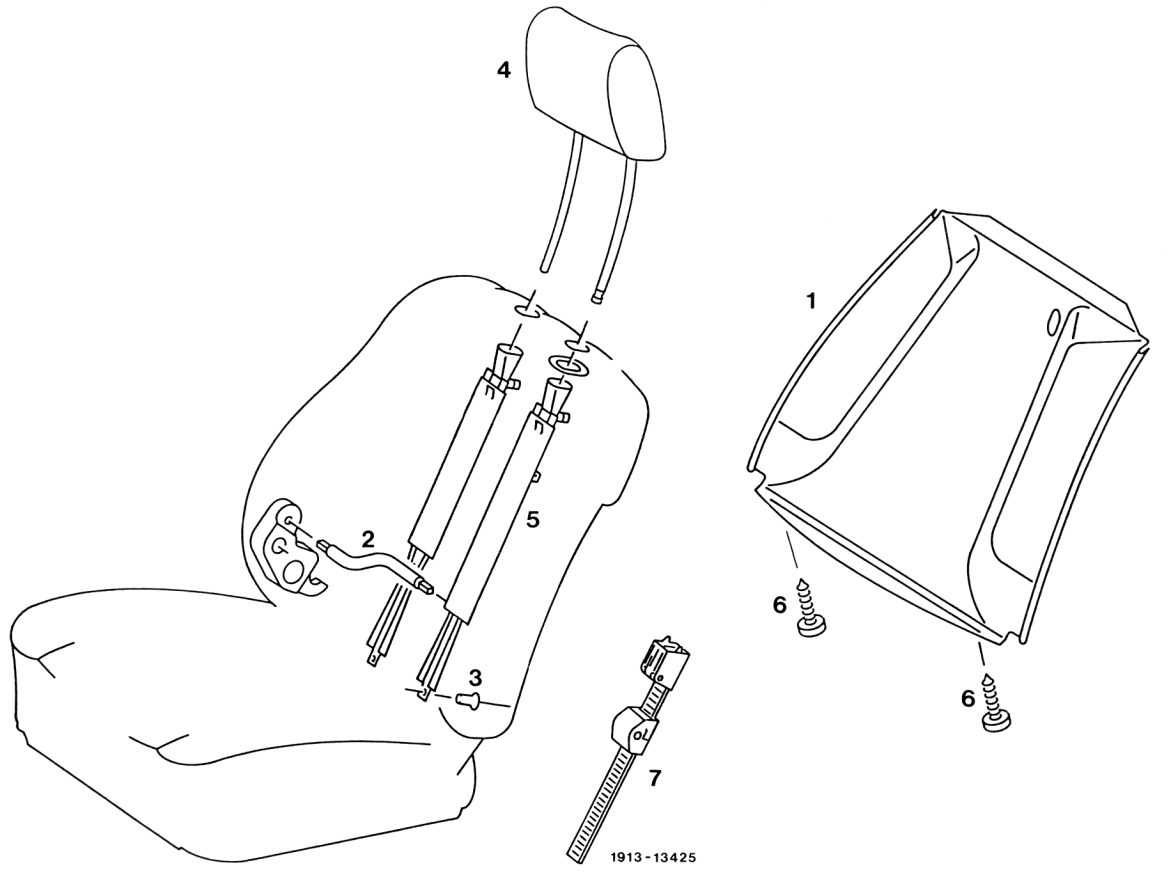

Head restraint (4)	remove and install
Clamping member (1)	remove and install (91–190)
Flexible shaft (2) on adjusting rail (7)	pull out

Remove and install

1 Pull off damping and slide lock in upward direction.

2 Remove adjusting rail (7).

3 For installation proceed vice versa.

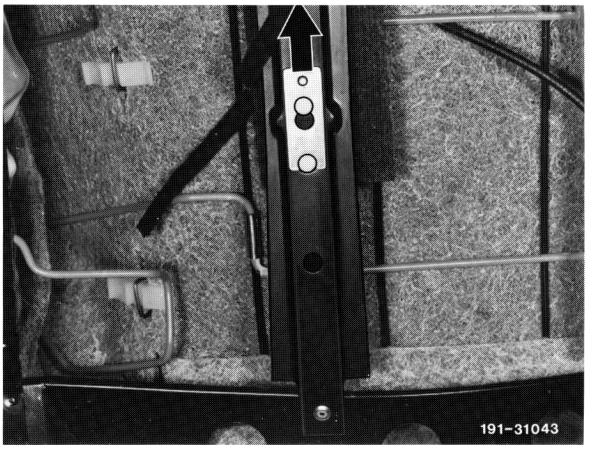

0601

91–070 Removal and installation of guide rail for head restraint

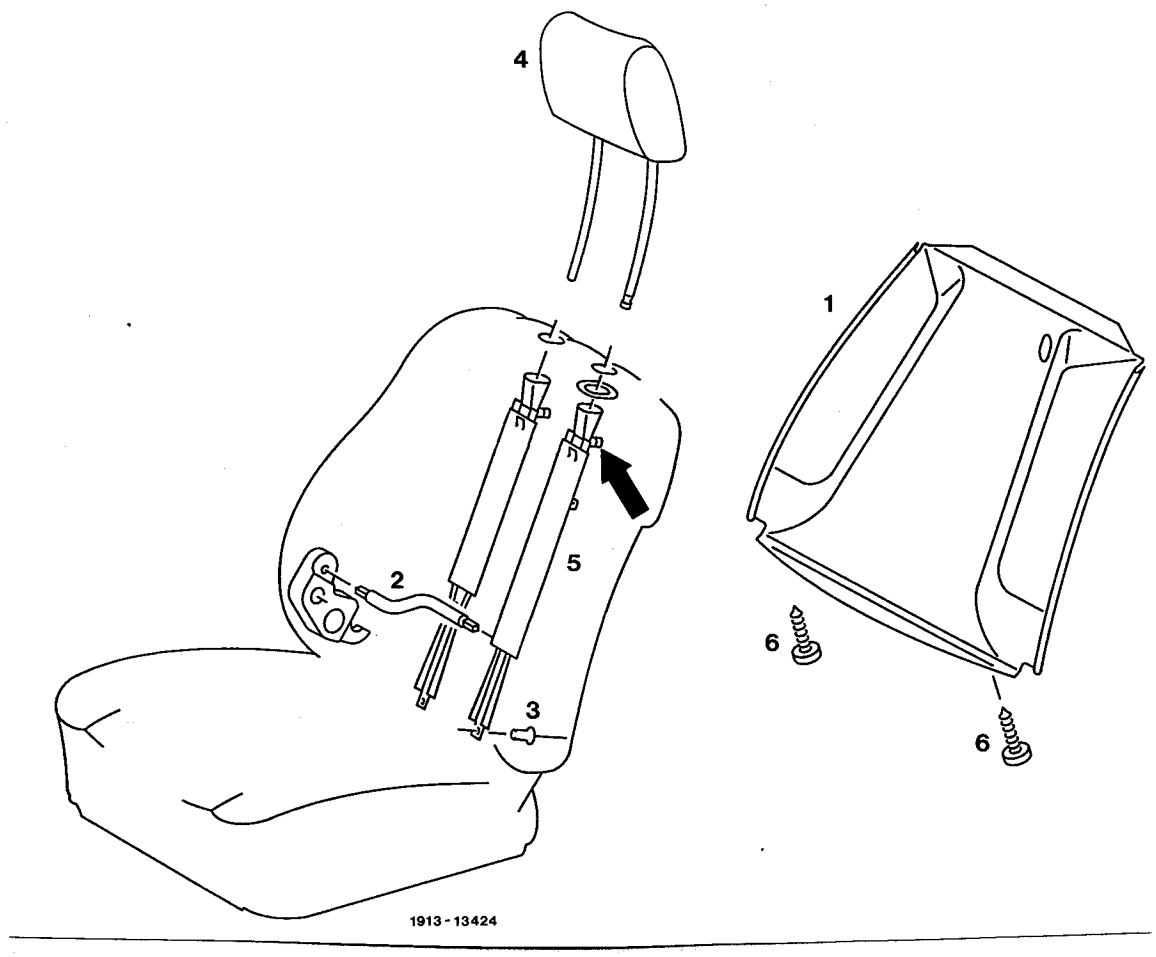

Head restraint (4)	remove and install
Clamping member (1)	remove and install (91–190)
Flexible shaft (2)	pull out at guide rail (5)
Rivet (3)	separate
Guide rail (5)	disconnect at backrest frame top (arrow) and take out
Guide rail (5)	insert at top into backrest frame (arrow) and fasten with rivet (3) below

For further installation proceed vice versa.

Head restraint removed.

A. Sedan

Removal and installation

1 Slide driver's seat toward the rear and height adjusting device downwards.

2 Force off front cover with plastic wedge and unscrew front screws from both seat guide rails.

3 Slide driver's seat forward and height adjustment in upward direction.

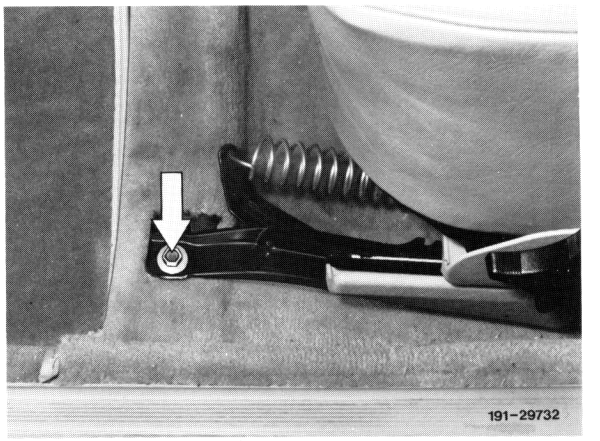

4 Remove screws at the rear on both seat guide rails.

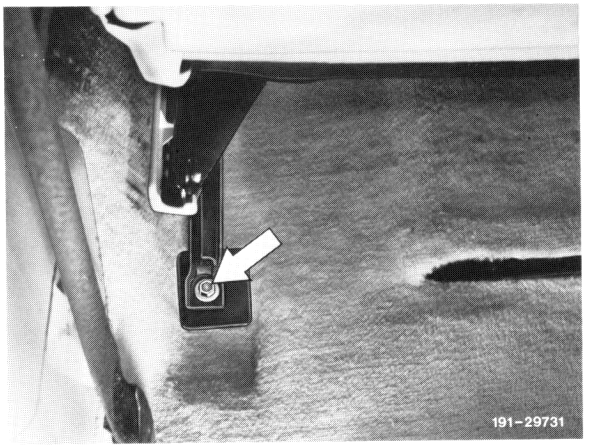

5 Pull driver's seat forward out of sliding rail.

6 Remove driver's seat.

7 For installation proceed vice versa.

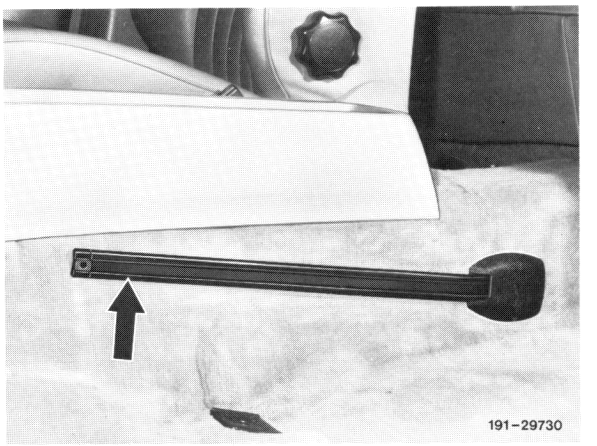

B. Coupe

1 Slide driver's seat toward the rear and height adjusting device in downward direction.

2 Force off front cover by means of plastic wedge.

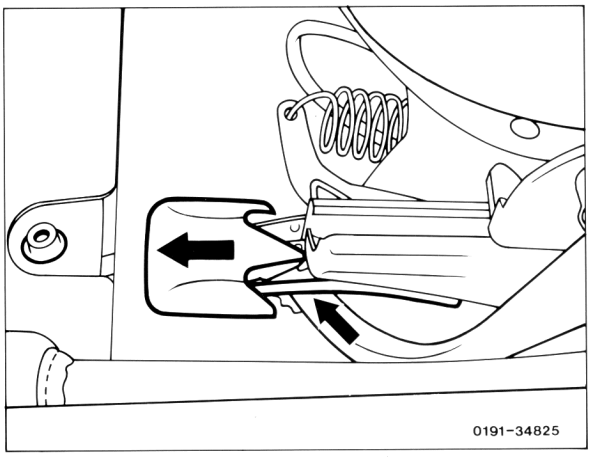

3 Unscrew front screw on both seat guide rails.

4 Slide driver's seat forward and height adjusting device in upward direction.

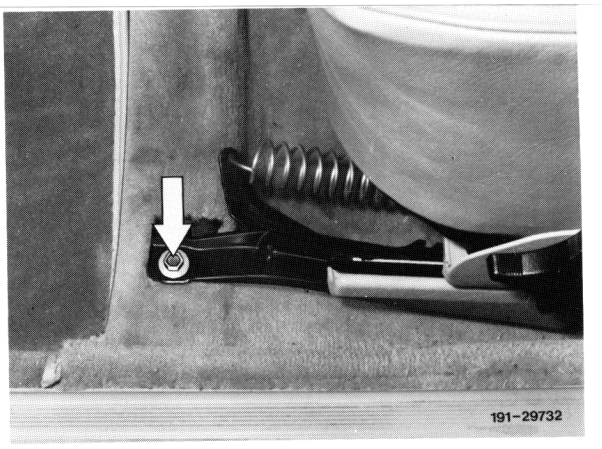

5 Unscrew rear screw on both seat guide rails.

6 Force off cover above guide rail and unscrew screws.

7 Pull slide rail toward the rear out of belt buckle.

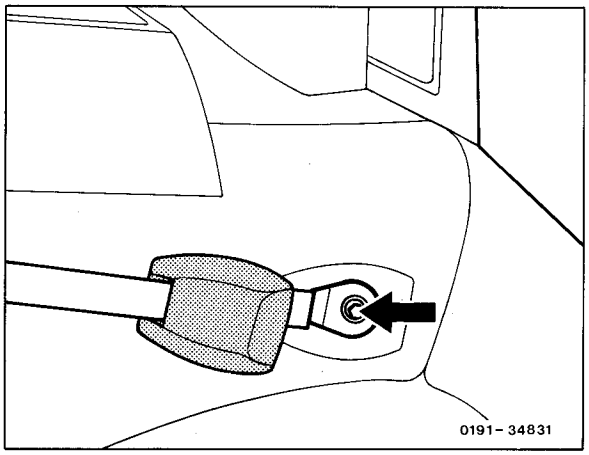

8 Tilt driver's seat slightly toward the rear and separate electric plug connection as well as vacuum line. Open cable strap.

9 Remove driver's seat.

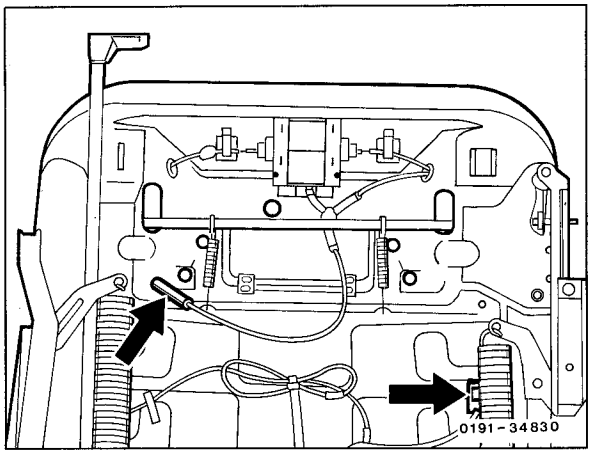

Electric plug connection and vacuum line (driver's seat removed)

10 Install driver's seat in vice-versa sequence.

91-110 Removal and installation of front passenger seat

Head restraint removed.

Removal, installation

1 Slide front passenger seat toward the rear and unscrew both screws on seat guide rails, front.

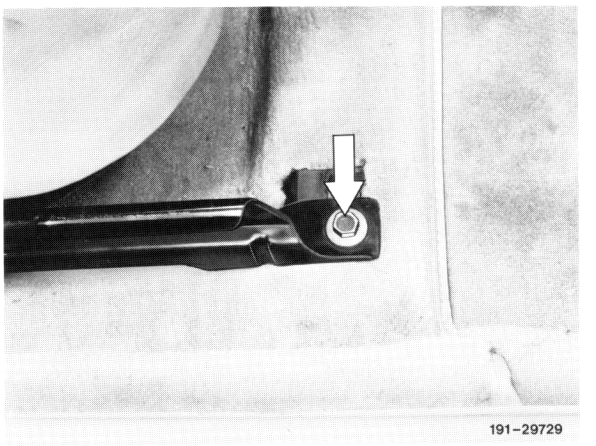

2 Slide front passenger seat forward.

3 Remove screws on seat guide rails, rear.

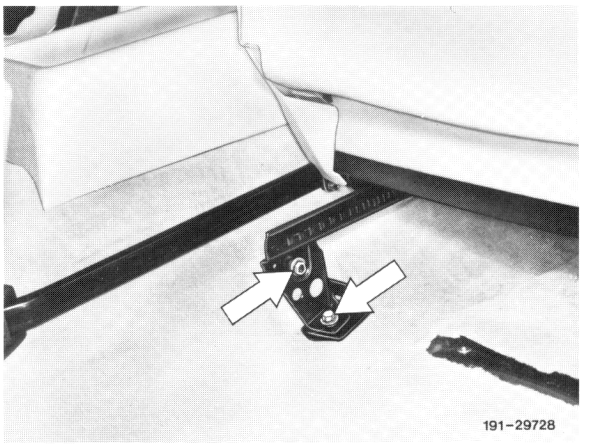

4 Pull front passenger seat forward out of slide rail.

5 Remove front passenger seat.

6 For installation proceed vice versa.

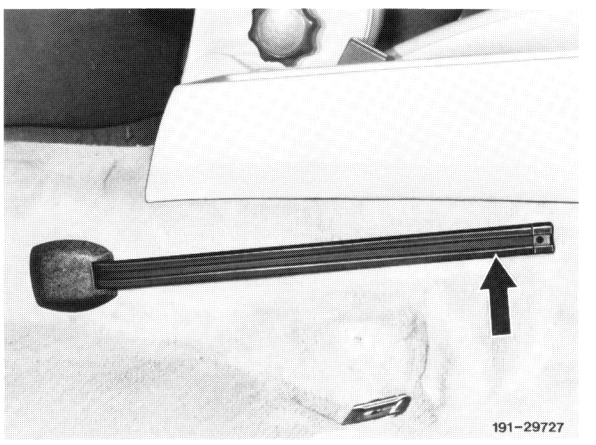

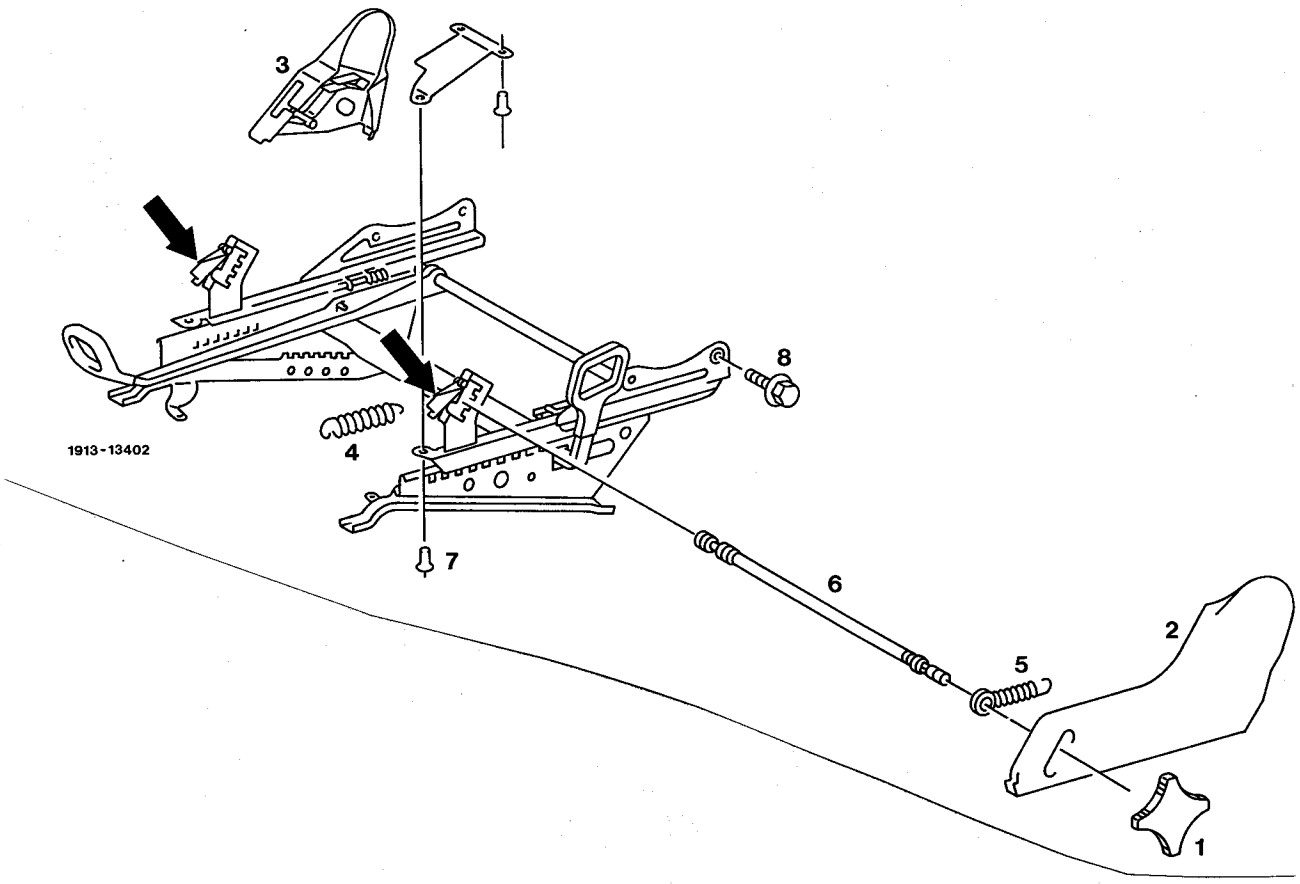

Driver's or front passenger seat	remove and install (91-100 or 91-110).
Handwheel (1), trim parts (2) and (3)	force off
Spring (4) and (5)	remove – install 2 each
Lock (arrows)	disengage and remove and install shaft (6) for adjusting tilt
Rivet (7)	drill out 1 each; during installation, replace rivet with screw M6x10 and nut M6
Screw (8)	remove and install 4 each on backrest fitting and remove driver's backrest
Seat height adjustment of cushion frame	remove

For installation proceed vice versa.

91-162 Function diagram of backrest lock (coupe)

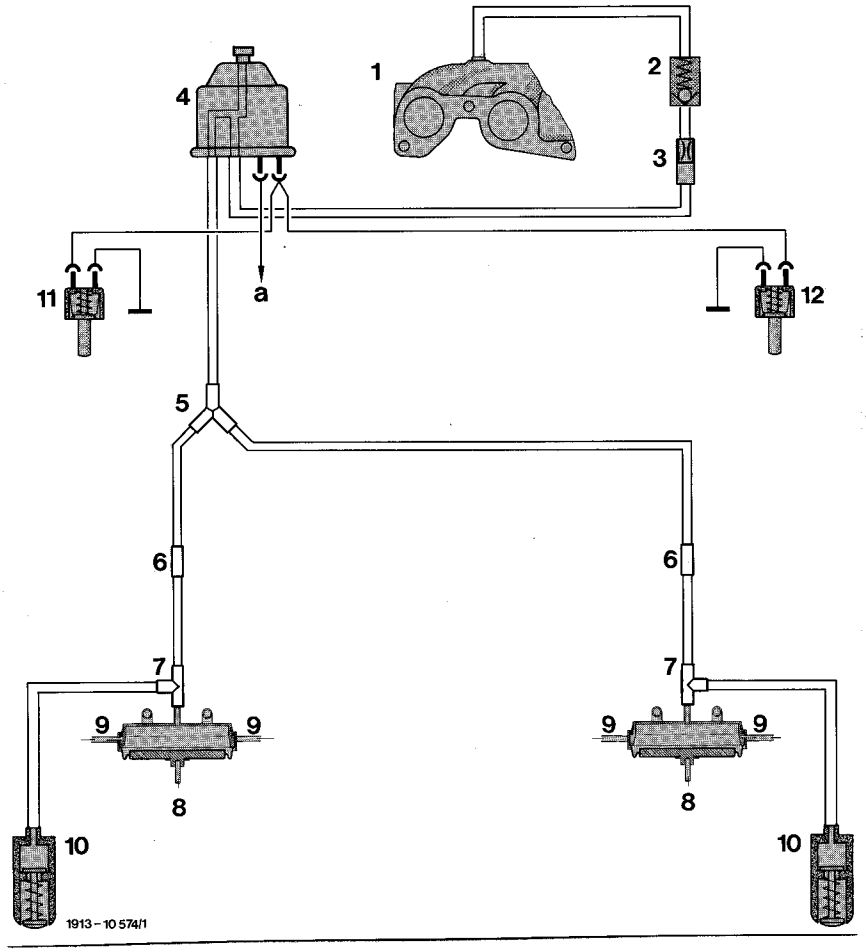

1	Intake manifold	7	Distributor
2	Check valve	8	Vacuum element
3	Connection with orifice	9	Actuator
4	Electric switchover valve (at left under rear seats)	10	Vacuum switch (backrest)
5	Distributor	11	Door contact switch, left
6	Connection	12	Door contact switch, right

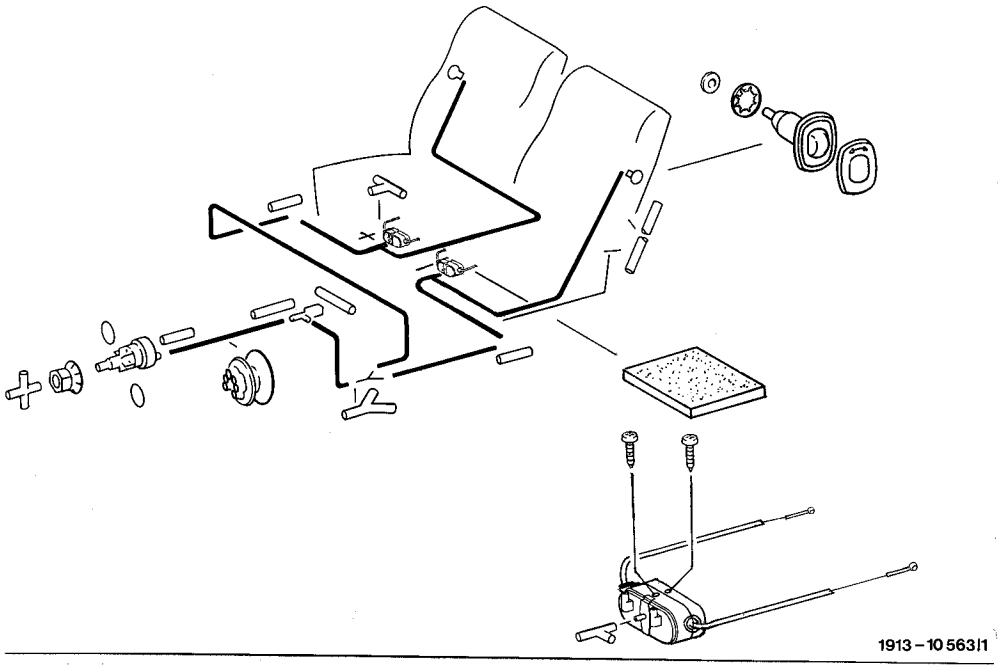

1913-10563I1

Note
In the event of complaints regarding noises from the front seats first determine whether the noise is caused by the seat cushion, backrest or seat adjustment mechanism. Perform these checks with the front seats **installed**. Before removing the seats also check the play in the reclining seat fitting by moving the backrest (figure) and note dimension "A".
Appropriate remedies are described in section "B".

The primary causes for noises and remedies for these are described below.

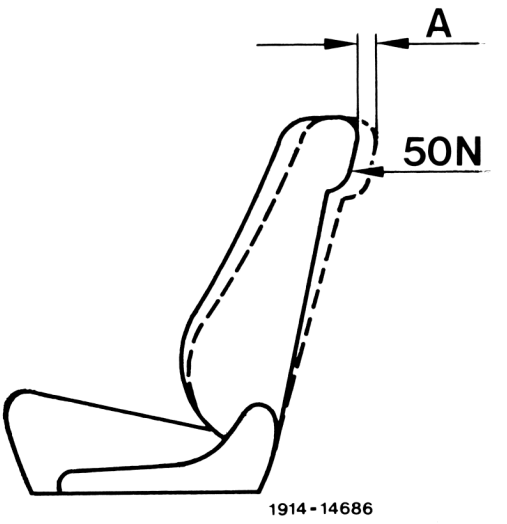

1914-14686

A. Seat cushion

1 On vehicles up to vehicle ident. end no. A 398050 or F 029367 replace seat cushion frame. For this purpose remove front seat and remove cover for seat cushion.

2 Remove all round wire clips and sew unbleeched muslin cover to rubberized fiber matting with a number of stitches.

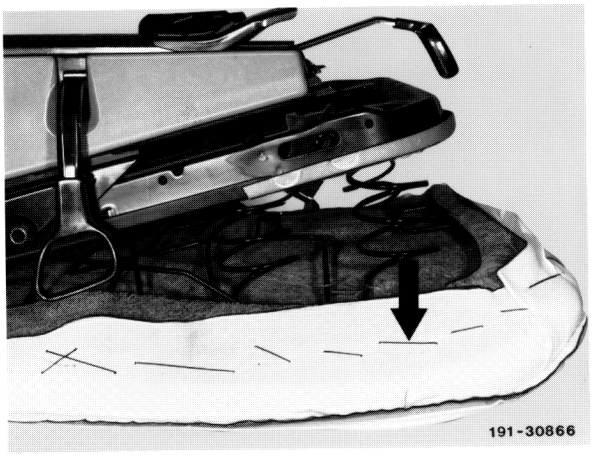
191-30866

3 Hook seat cover in and install one additional clip 006 988 12 78 into the clip groove at the front and rear.

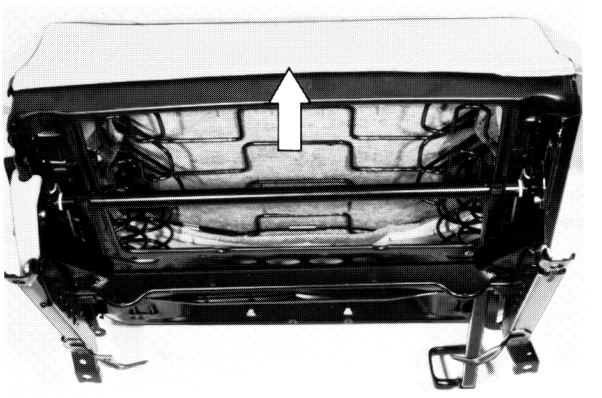
191-33669

165M

B. Front seat backrests

1 Replace backrest frame if the play in the reclining seat fitting is greater than 30 mm. If the play is less than 30 mm check whether the springs can be moved in relation to one another. If so replace the backrest frame in this case as well. For this purpose remove the front seat and take off the cover for the backrest frame (RI 91–182).

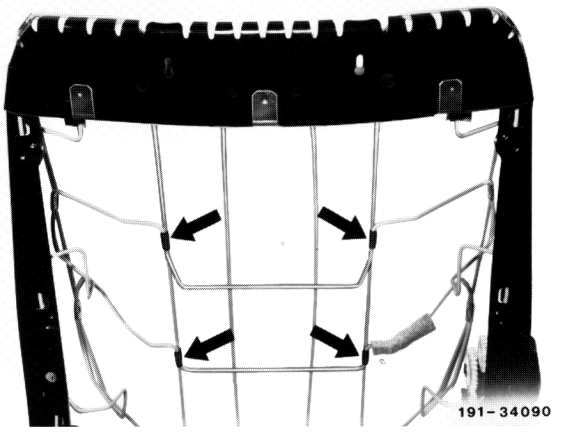

2 If the stop on the rubberized fiber matting rubs against the top of the backrest under load, replace rubberized fiber matting.

3 Cover both upper clips for retention in the longitudinal direction with large pieces of self-adhesive felt.

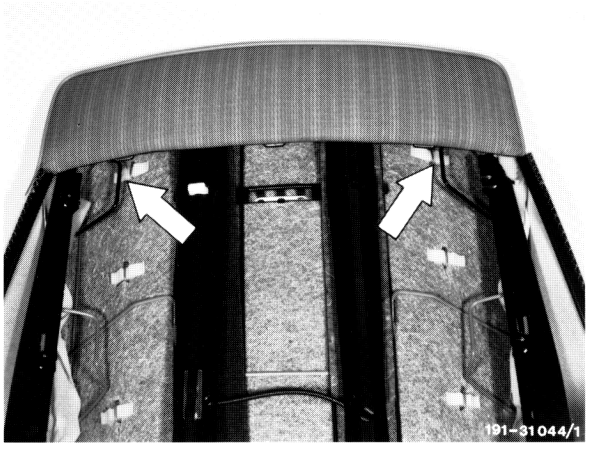

Additional causes of noise and remedies:

Cause

Backrest fitting rubs against backrest frame.

Remedy

Increase adjustment area or contact surfaces on inside and outside.

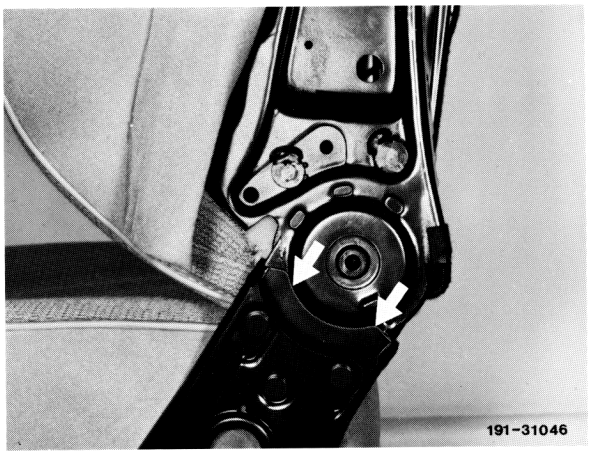

Cause

Guide rails for head restraints loose at bottom of backrest frame.

Remedy

Remove rivet and refasten with new rivet.

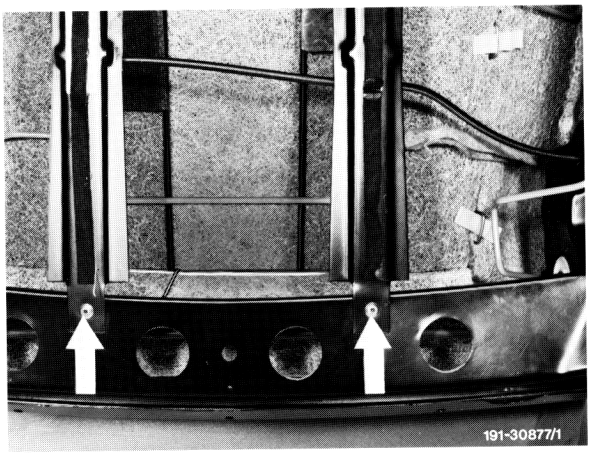

Cause

Top spring touches backrest frame at side.

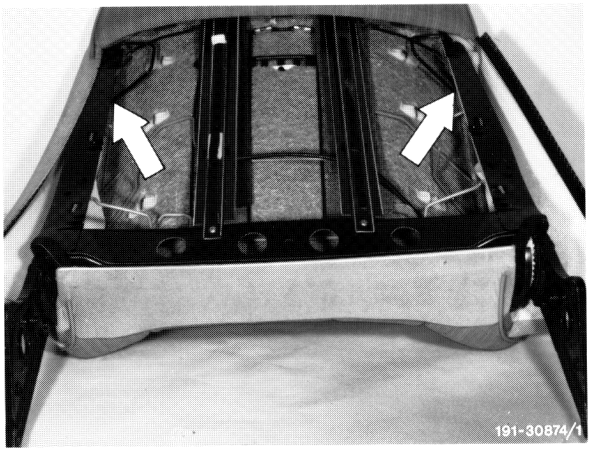

Remedy

Cover backrest frame in this area with self-adhesive felt.

Cause
Mounts for springs loose at side of backrest frame.

Remedy
Bend retaining lugs down tighter with screwdriver.

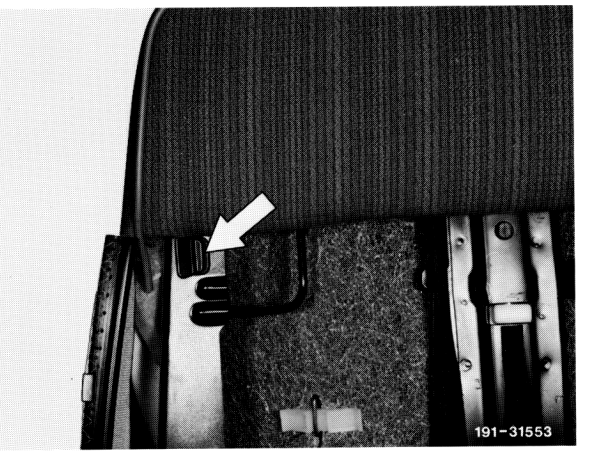

Cause
Clips at top of backrest frame (3 each) rub against tensioning element.

Remedy
Glue self-adhesive felt strips over clip groove on tensioning element.

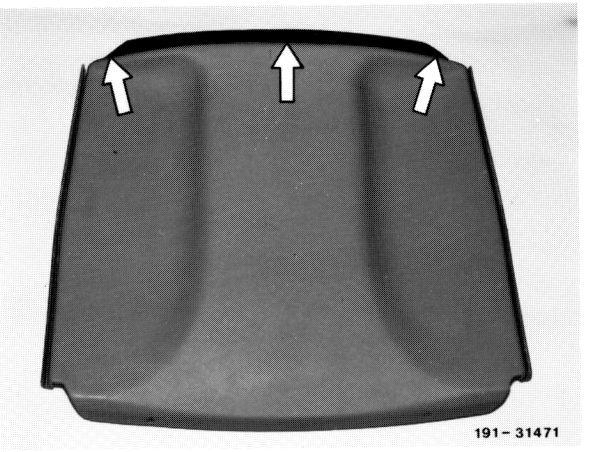

Cause

Piping on left and right rubs against tensioning element at top.

Remedy

Glue self-adhesive felt over corners (duct) on tensioning element.

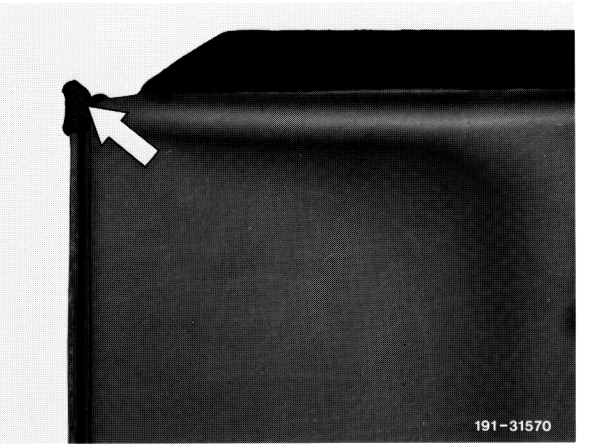

Cause

Tensioning element rubs against backrest frame at bottom left and right.

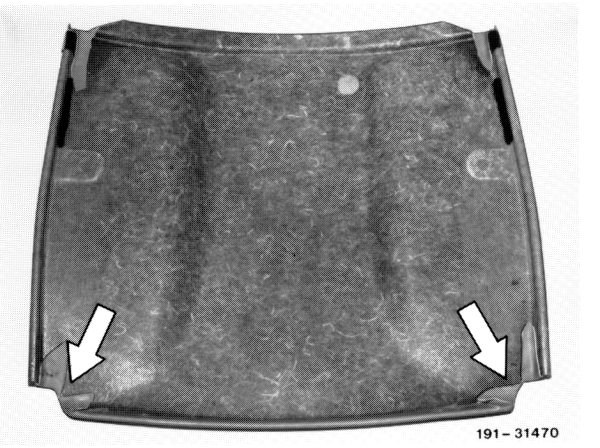

Remedy

Remove punching burr on backrest frame and cover with self-adhesive felt.

Note

When hooking the backrest cover in install an additional four clips 006 988 14 78 per backrest on the attachment strips and press into tensioning element.

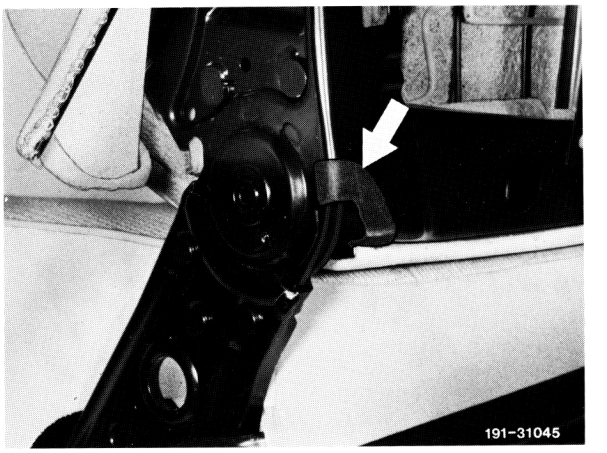

91.7-165/5

C. Seat adjustment mechanism

On all seat adjustment mechanisms with rivets of first version, drill out rivets and replace with nuts and bolts.

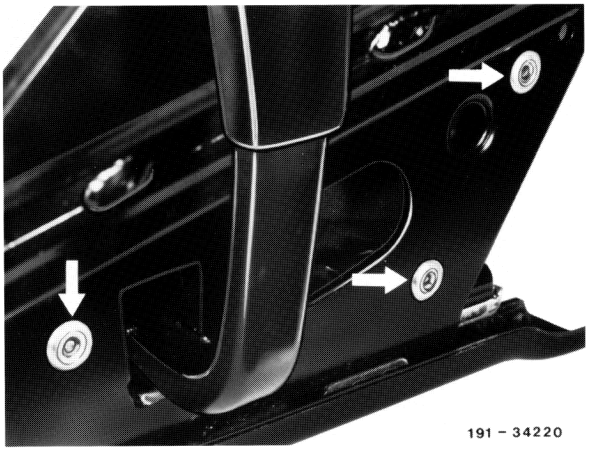

Seat adjustment mechanism, 1st version

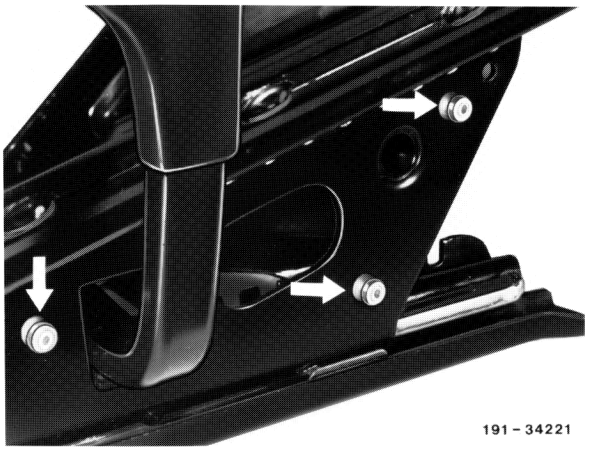

Seat adjustment mechanism, 2nd version

When assembling the front seats also perform the following measures:

1 Grease guide sleeves in passage area of cushion frame.

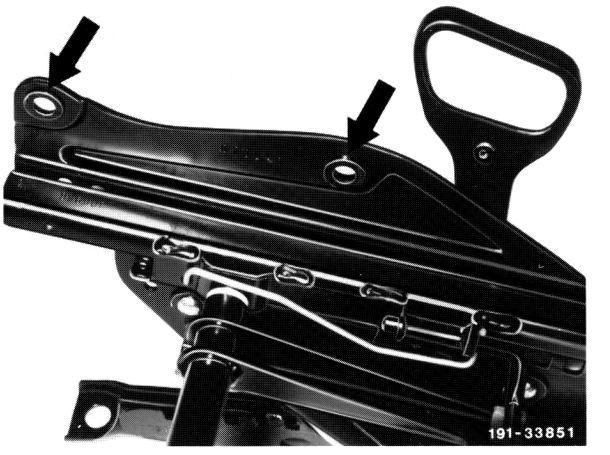

91,7-165/6

2 Grease oblong holes and adjusting mechanism on inclination adjustment shaft.

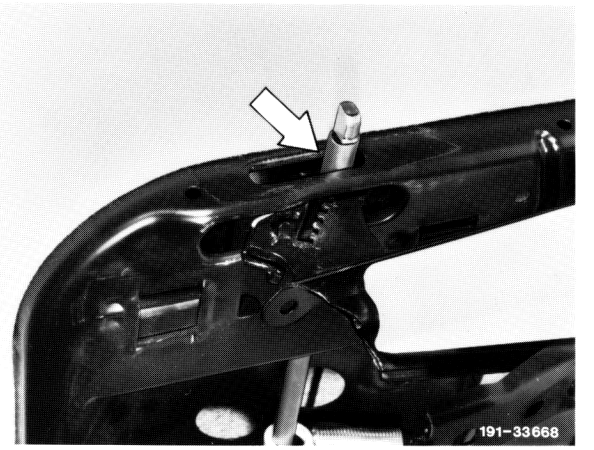

3 File down panelling on reclining seat fitting so that backrest cover cannot be damaged.

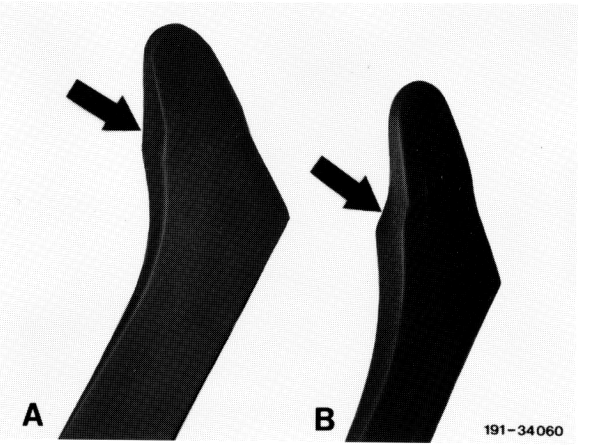

B Panel filed down

91.7-165/7

91-125 Removal and installation of gear unit for backrest adjustment

Driver's or front passenger seat removed
(91-100 or 91-110)

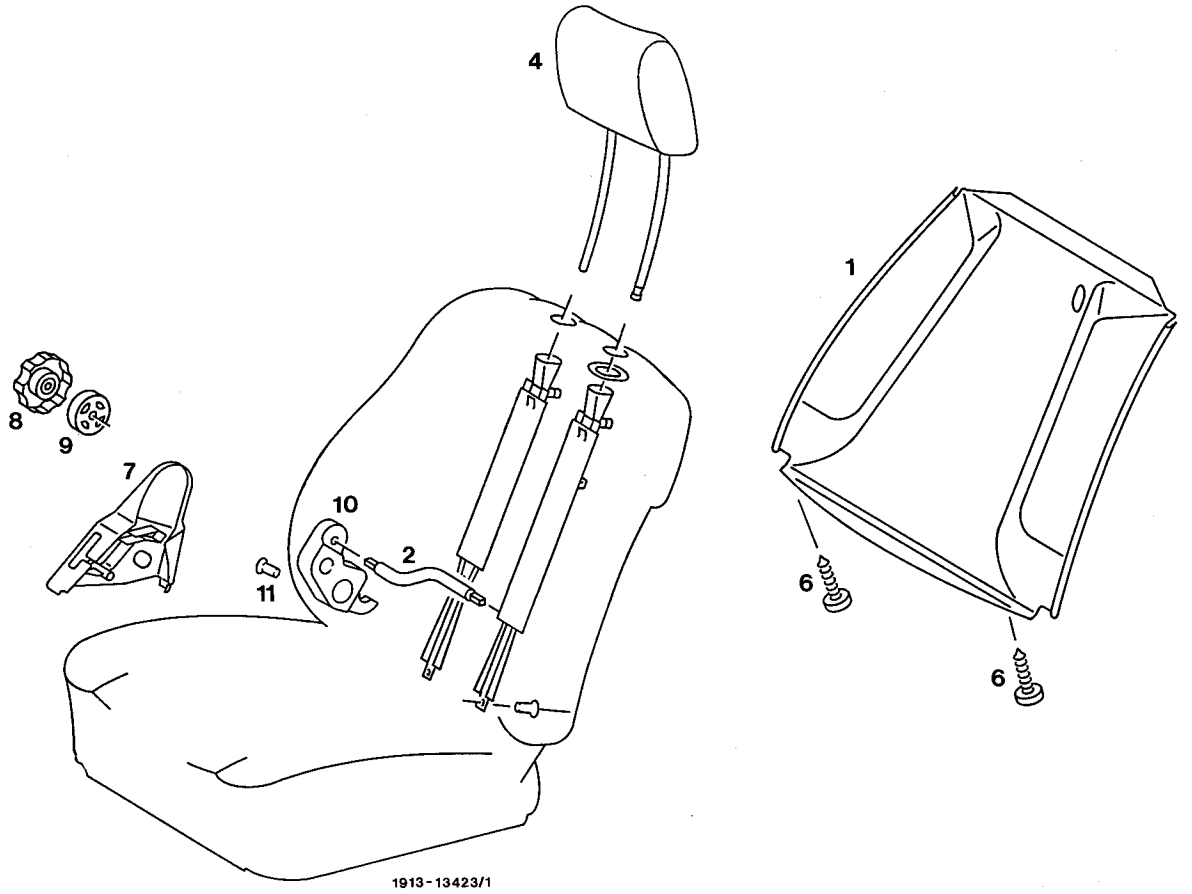

Screw (6)	2 each, unscrew
Clamping member (1)	remove, disengage covering laterally
Flexible shaft (2)	pull out of gears
Trim (7)	force off
Handwheel (8)	force off uniformly
Cover (9)	unbend lock and force off
Gear cover (10)	remove
Rivet 4x6.1 (11)	3 each, bore out
Gears	remove, during installation in backrest frame lock and fasten rivet, part no. 910002 004132

Remove and install

1 Remove clamping member (91–190).

2 Remove flexible shaft (2) from gears.

3 Force off trim (7) with plastic wedge.

4 Uniformly force off handwheel (8) by means of 2 plastic wedges.

5 Unbend locks on cover (9) and remove from shaft.

6 Separate rivet head (3 each) and completely remove gears.

Installation note

Insert gear housing into backrest frame. Make sure that the locking pin is inserted in backrest frame and that the gear housing rests flat against backrest frame.

Fasten gear housing with rivet 4x6.1 (3 each), part no. 910002 004132.

Handwheel (8) and cover (9) must be renewed following disassembly.

7 For installation proceed vice versa.

A. Sedan

Removal

1 Push detent at left and right to the rear and remove rear seat cushions.

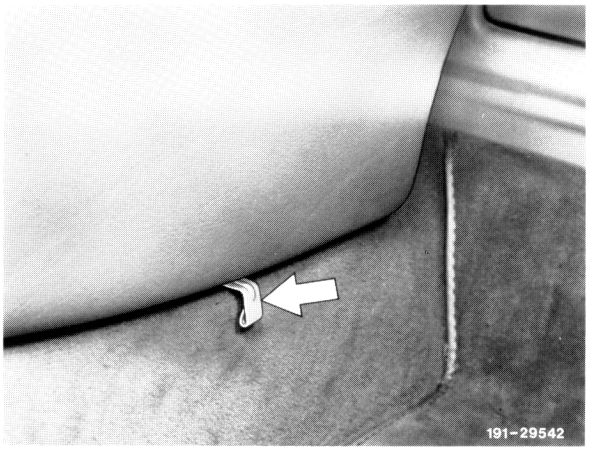

2 Unscrew lower fastening screws outside and in center.

3 Swivel head restraints in rear passenger compartment toward the rear.

4 Remove rear seat backrest in upward direction.

Installation

5 Engage rear seat backrest in upper holding links, paying attention to correct location of rear seat belts.

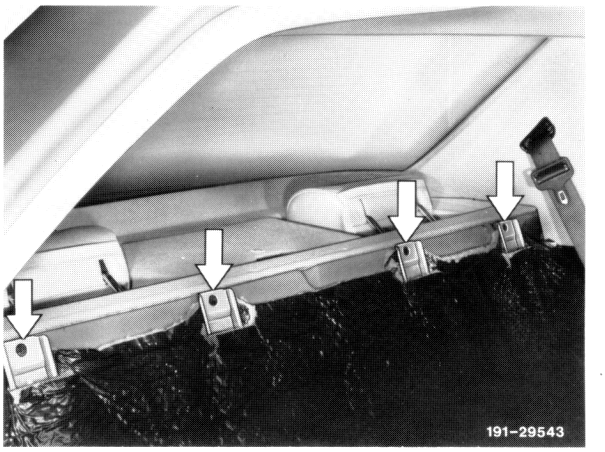

6 Screw on backrest below, paying attention to installation position of foam members in range of belt locks. Make sure that the foam members are not pinched-in behind seat backrest frame.

7 When installing rear seat, expose lap belt and engage rear seat at front in detent.

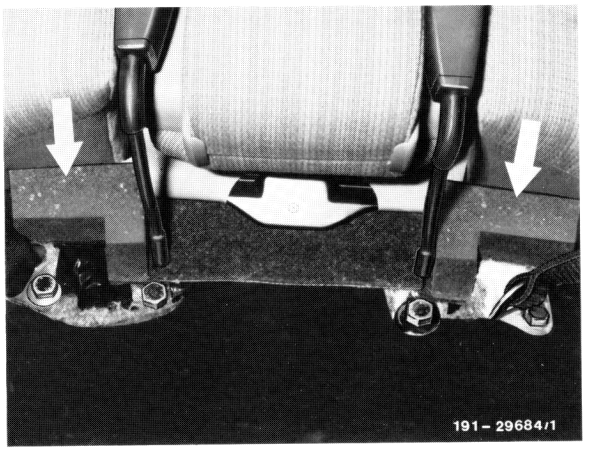

B. T-sedan

Remove and install

1 Actuate handle on rear seat cushion and tilt rear seat cushion in upward direction.

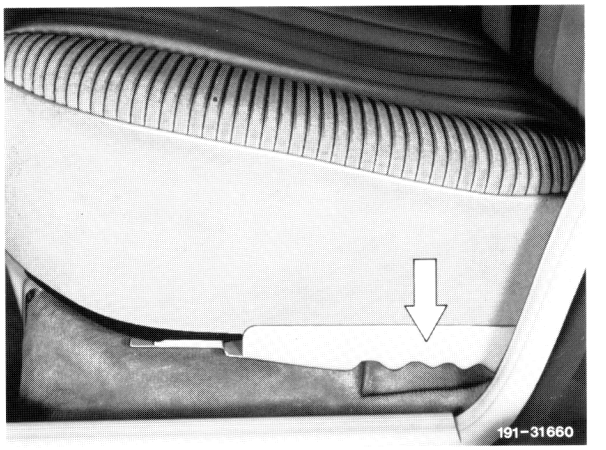

2 Pull up locking lever on underside of seat cushion and remove seat cushion in upward direction out of bearing pin.

3 Expose belt locks at rear seat backrest, forcing off holder for this purpose and pulling elastic band out in downward direction.

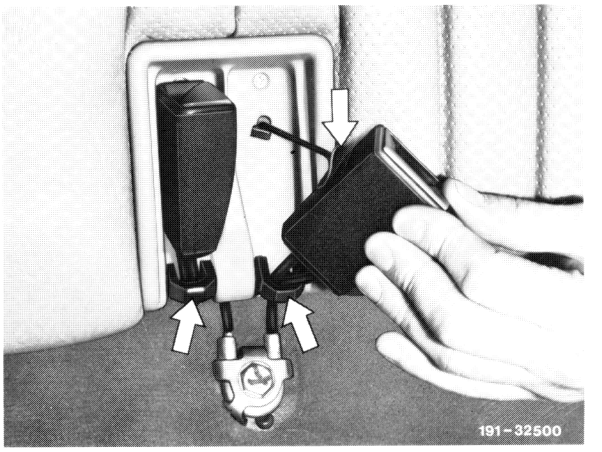

4 Slide trim on backrest hinge in upward direction.

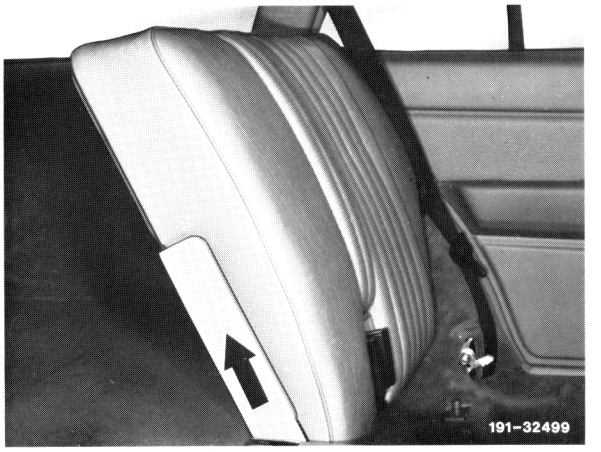

5 Unscrew screws (3 each) on backrest hinge.

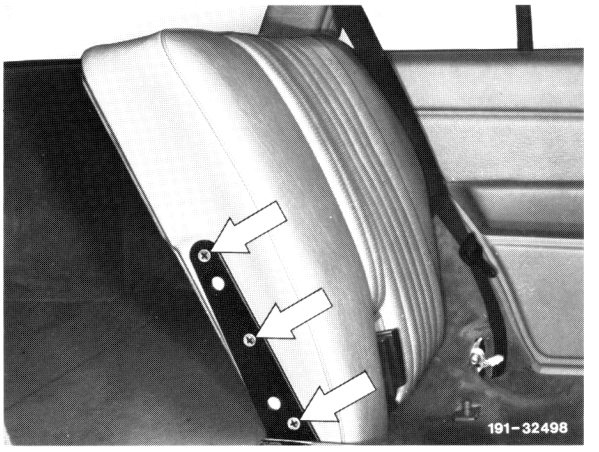

6 Pull lock from bearing bolt.

7 Pull rear seat backrest out of bearing and remove.

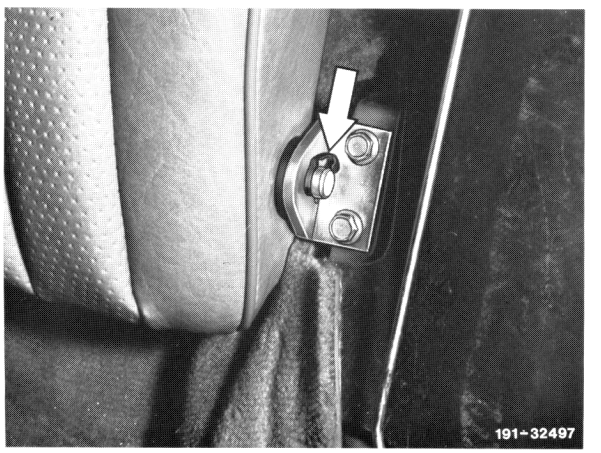

Shown with wheelhouse trim removed

C. Coupe

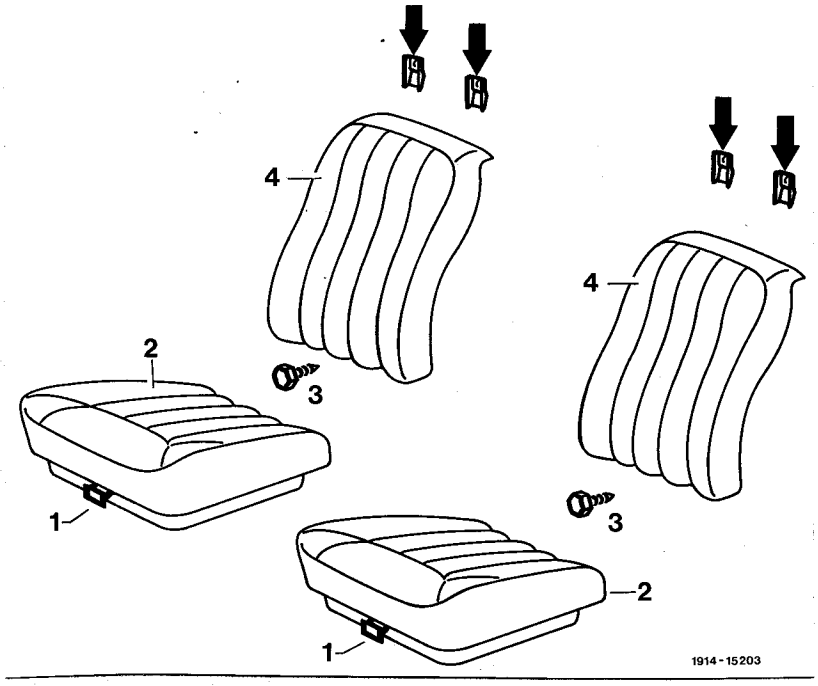

Locking button (1)	push
Rear seat cushion (2)	lift at front and remove
Screw (3)	unscrew
Rear seat backrest (4)	push upward and remove. During installation, engage rear backrest at top in holder on rear wall (arrows).

D. Convertible

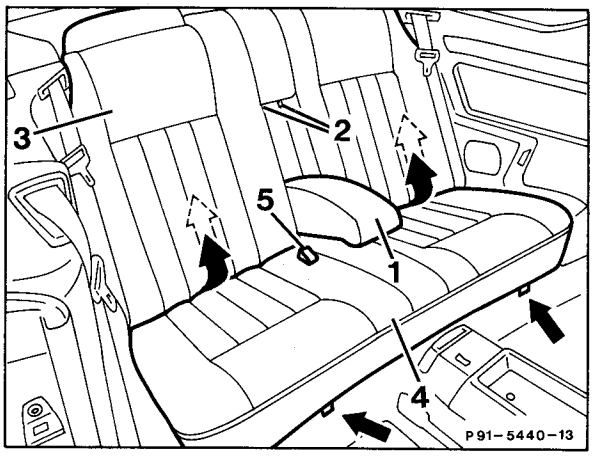

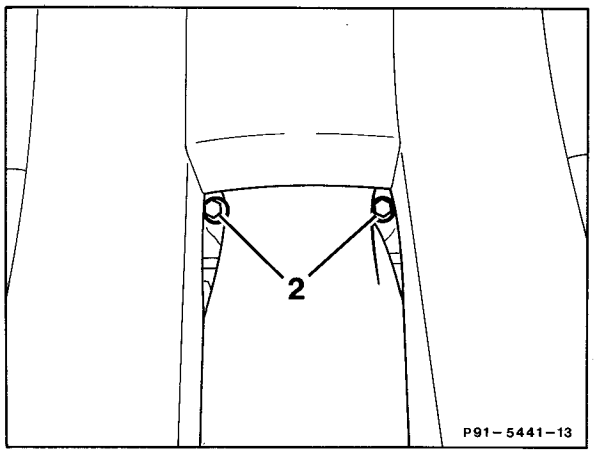

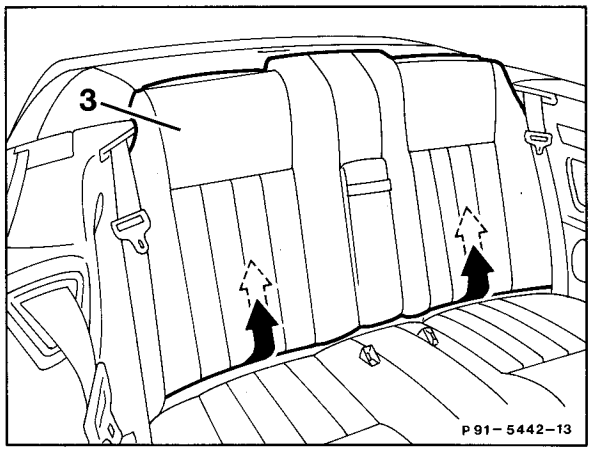

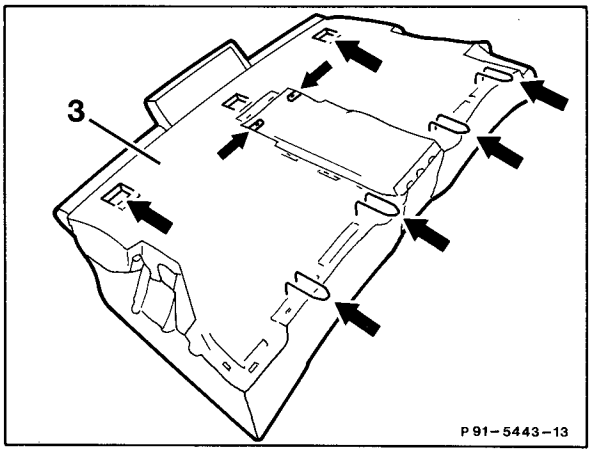

Soft top	open.
Front seat	move forward and tip front backrest forward.
Rear armrest (1)	fold down.
Mounting screws (2) in cutout for rear armrest	screw out, screw in (2 each, WAF 8).

Note
To reach screws pull foil in upper area toward center.

Rear seat backrest (3)	remove by pulling upward out of insert tabs, install.

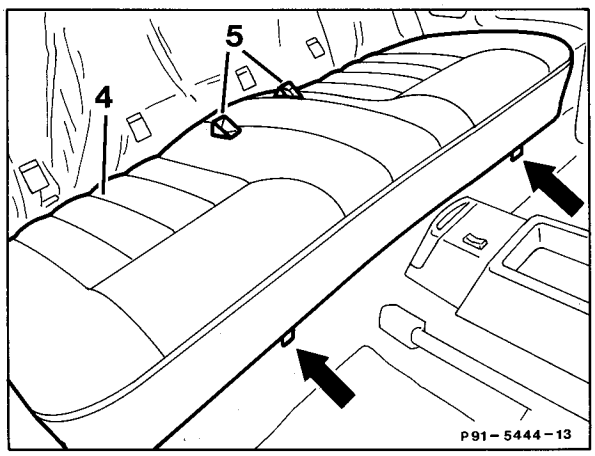

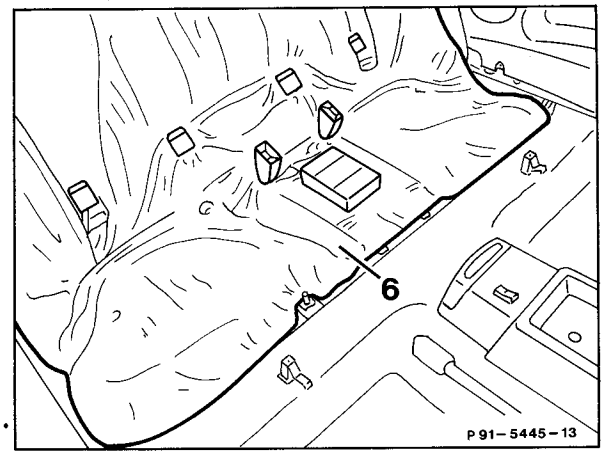

Catches on left and right . . . . . press (arrows).

Rear seat bench (4) . . . . . lift over belt buckles (5) and remove, install.

Note

The rear seat bench (4) can also be removed without removing the rear backrest.

Before installing rear seat bench and rear backrest — install insulating mat (6) in rear or check position.

⚠

When installing guide belt buckles (5) through rear seat bench (4) and ensure that belt buckles (5) are not damaged.

91-180 Removal and installation of driver's seat cushion cover

Driver's or front passenger seat removed
(91-100 or 91-110))

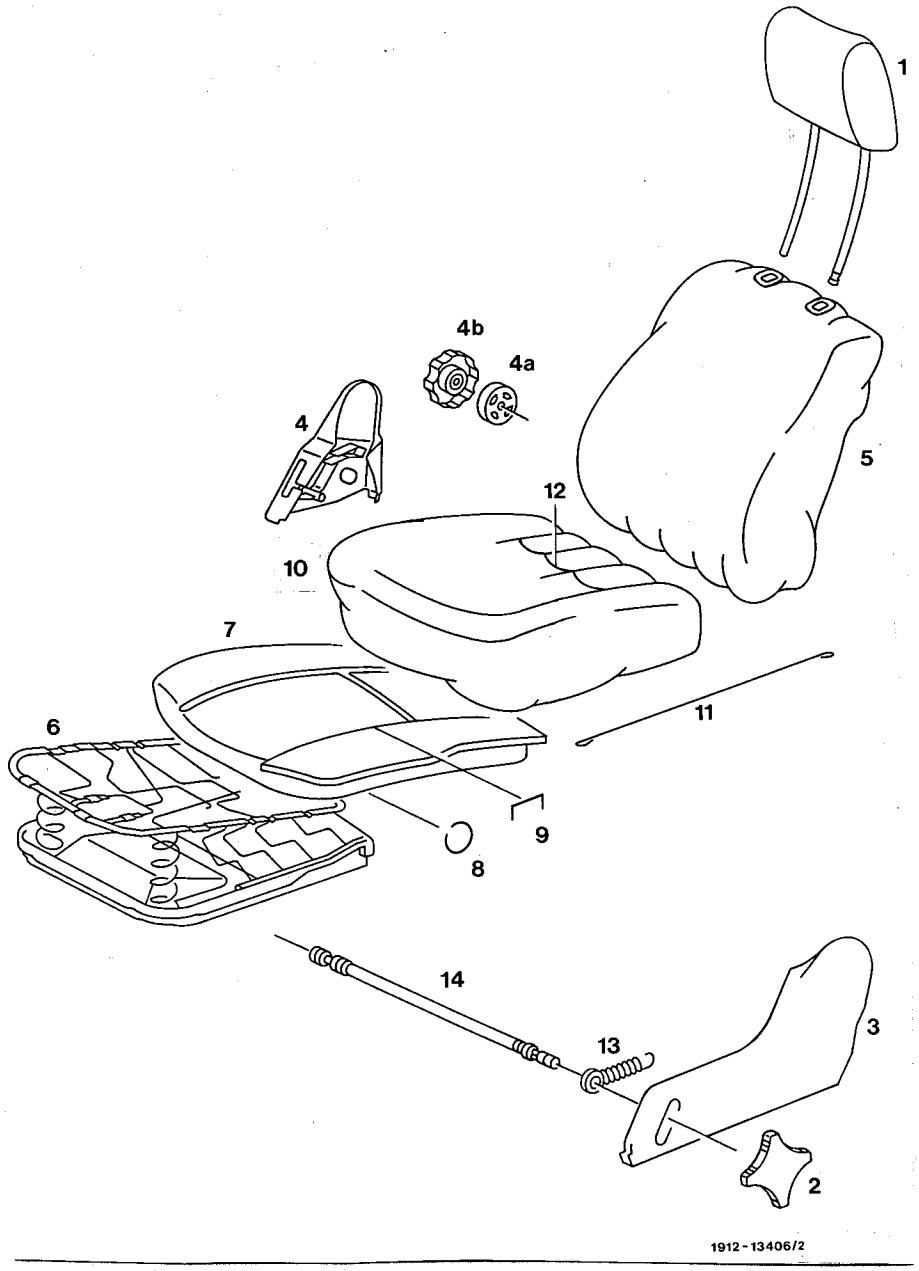

Handwheel (2) of tilt adjusting shaft (14)	pull off
Trim (3) and (4) of backrest fitting	force off
Handwheel (4b)	force off uniformly by means of 2 plastic wedges
Cover (4a)	Unbend lock and remove. Handwheel (4b) and cover (4a) must be renewed following disassembly

Backrest (5)	unscrew from cushion frame
Spring (13)	disengage (2 each)
Shaft (14) for tilt adjustment	remove
Cushion frame (6) with cover (10)	place on suitable base and press against each other
Seat cushion cover (10)	pull out all-around on plug-in channel
Round wire clips (8)	separate with pliers and pull out (during installation, sew-on nettle cloth or glue on)
Rubber hair mat (7)	remove from cushion frame (6)
Stapling clip (9)	unbend at bottom of rubber hair mat and remove seat cover (10) from rubber hair mat
Wire clip (11) and stapling strip (12)	locate with stapling clip (9) during installation. For installation proceed vice versa.

Removal

1 Remove driver's or front passenger seat (91–100 or 91–110).

2 Remove head restraint.

3 Pull off handwheel for tilt adjustment. Force off trim with plastic wedge.

4 Pull off handwheel for backrest adjustment. Unbend lock of plastic cover, remove cover. Force off trim by means of plastic wedge.

Installation note

Handwheel and plastic cover for head restraint or backrest adjustment must be renewed upon removal.

5 Unscrew backrest from seat cushion frame.

6 Remove tilt adjustment:
Disconnect spring.
Turn shaft in upward direction.
Disengage locking bracket at right and left.
Turn shaft downward and pull out laterally.

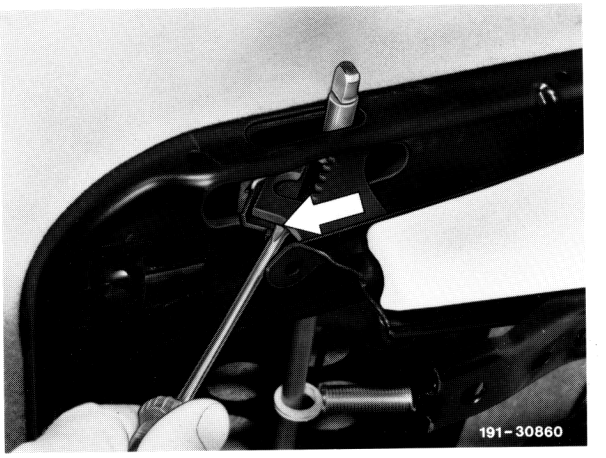

7 Place seat cushion with covering in downward direction on suitable support.

8 Compress spring box and pull out covering from plug-in channel all-around.

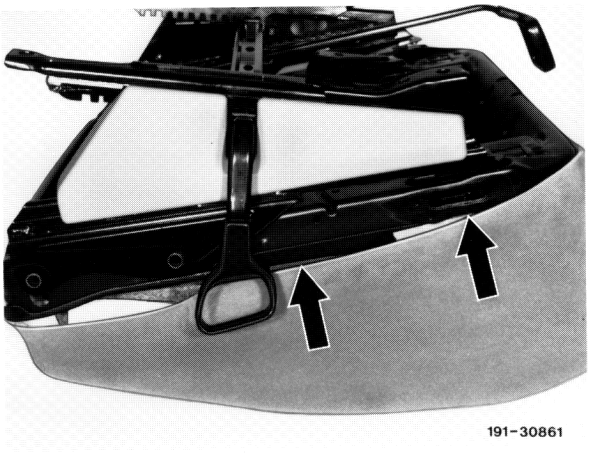

9 Pull round wire clips from rubber hair mat.

10 Remove spring box from rubber hair mat.

11 Unbend stapling clips on bottom of rubber hair mat and remove cover.

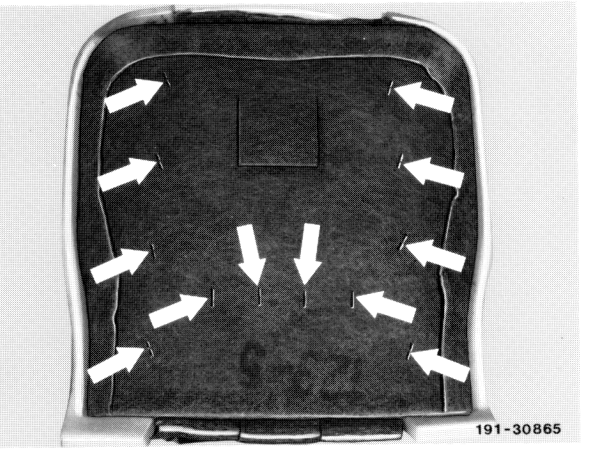

Installation

12 Place covering on rubber hair mat and align. Push new stitching clips through rubber hair mat and bend with pliers.

Note: In this connection, locate the laterally pulled in wire clips and the transverse stitching ribbon at the rear by means of the stitching clips.

13 Place spring box into rubber hair mat.

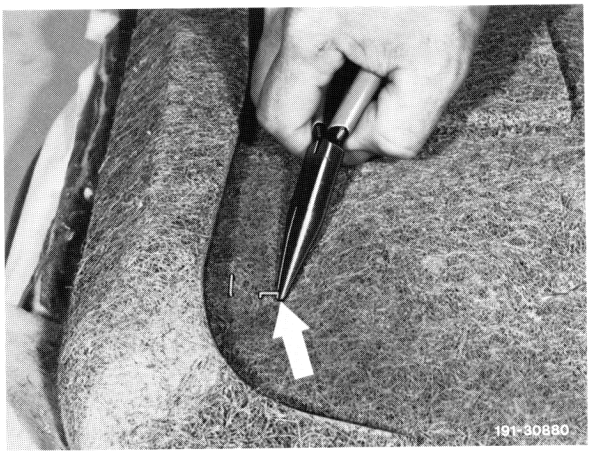

14 Fasten nettle cloth with upholstery yarn (instead of round wire clips) to rubber hair mat.

15 Compress spring box and engage covering on plug-in channel.

16 Introduce shaft for tilt adjustment in such a manner that the mount for the handwheel is facing toward outer side of seat. Simultaneously, introduce the two restoring springs.

17 For further installation proceed vice versa.

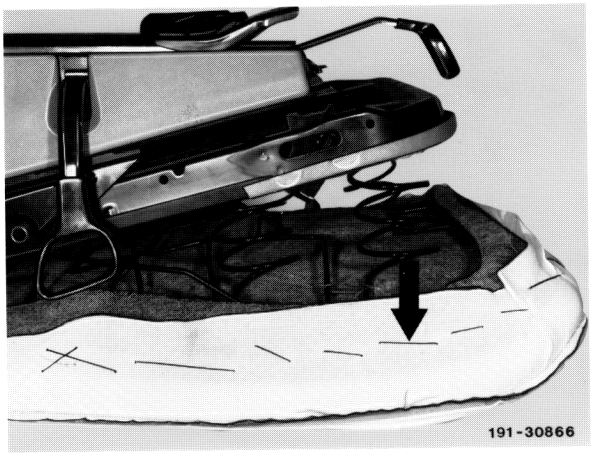

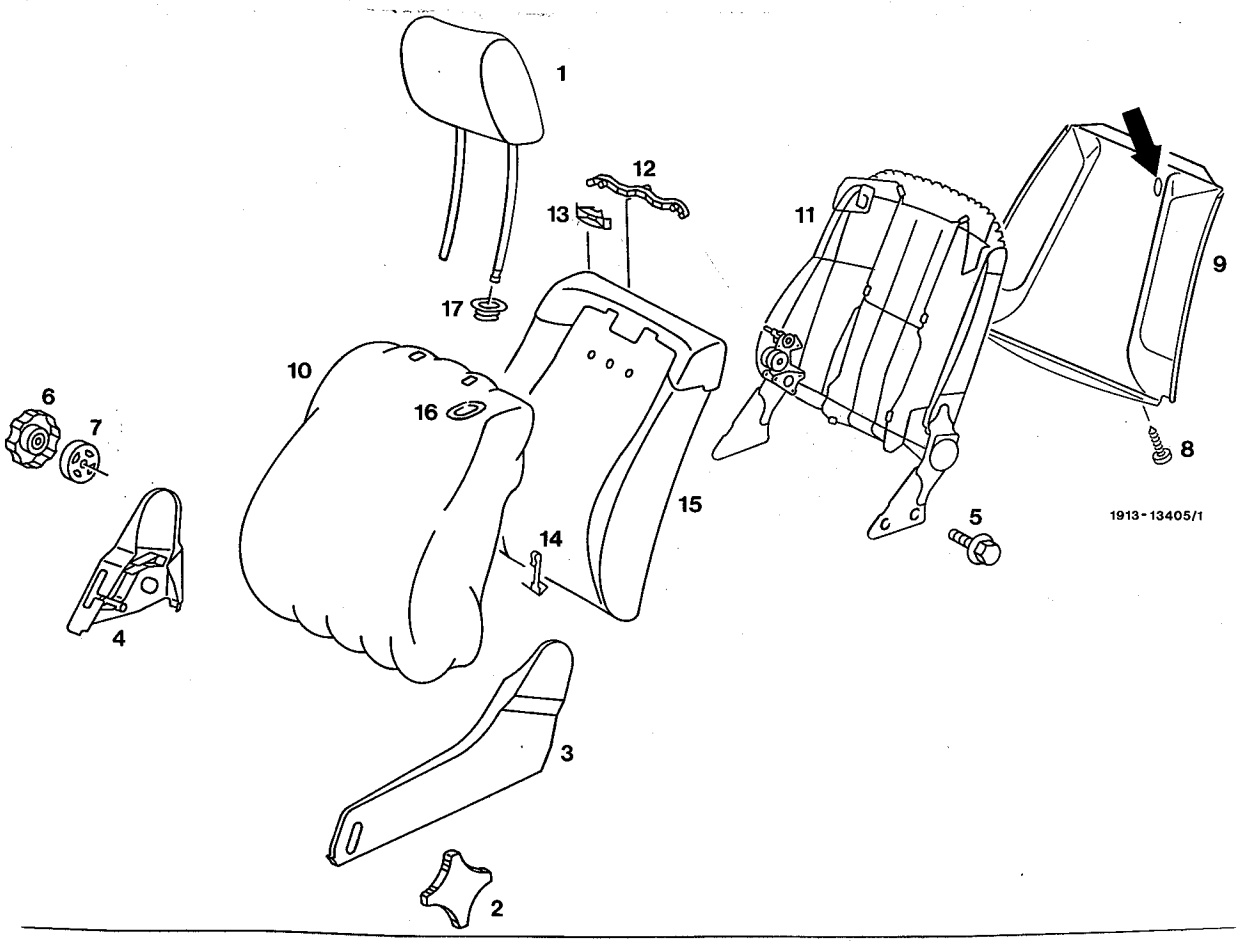

Head restraint (1)	remove and install, for this purpose,set head restraint completely in upward direction, push lock through clamping member (arrow) and pull out head restraint
Driver's or front passenger's seat	remove and install
Handwheel (2)	pull off
Trim (3) and (4)	force off with plastic wedge
Screws (5) on backrest fitting	unscrew 2 each and remove backrest from seat cushion
Handwheel (6)	uniformly force off with 2 plastic wedges. Handwheel (6) and cover (7) must be renewed following disassembly
Locks of plastic cover (7)	unbend and remove from shaft

Cover (10)	pull laterally out of plug-in channel while compressing backrest frame (11)
Screw (8)	unscrew 2 each
Clamping member (9)	pull downward and remove
Cover (10)	disengage at bottom and top
Tightening strip on plastic bracket (12)	disengage
Round wire clamp (14)	pull out
Backrest frame (11) of rubber hair mat (15)	remove
Clamp (13)	disengage 8 each and release nettle cloth laterally of rubber hair mat (15)
Rosette (16)	carefully separate with screwdriver and remove eye (17)
Cover (10)	remove from rubber hair mat. For installation proceed vice versa.

91–190 Removal and installation of tensioning member on driver's or front passenger backrest

1 Unscrew screw (2 each) on clamping member below.

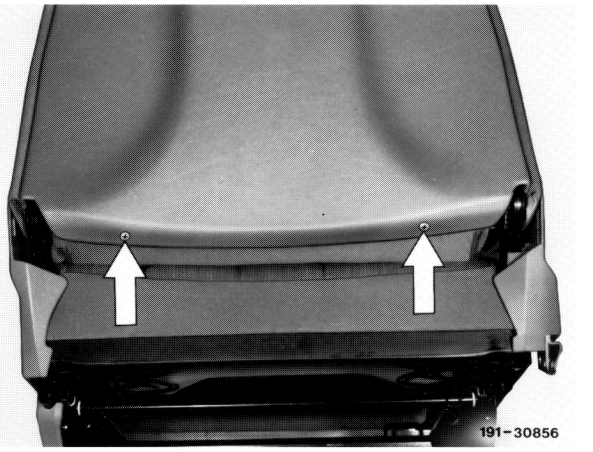

Shown with driver's seat removed

2 Pull backrest covering laterally at left and right out of plug-in channel while compressing backrest frame.

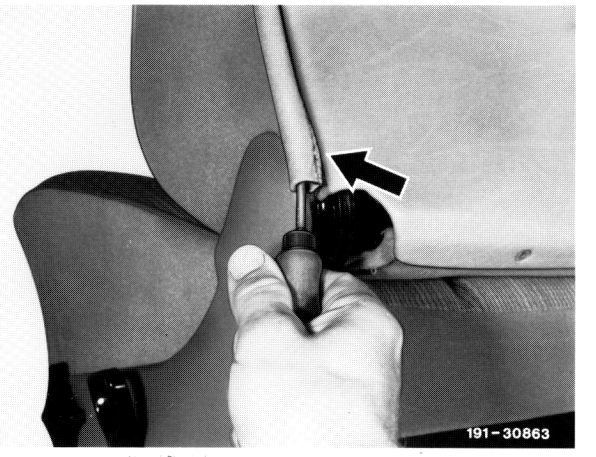

Shown with driver's seat removed

3 Pull off clamping member in downward direction.

4 For installation proceed vice versa.

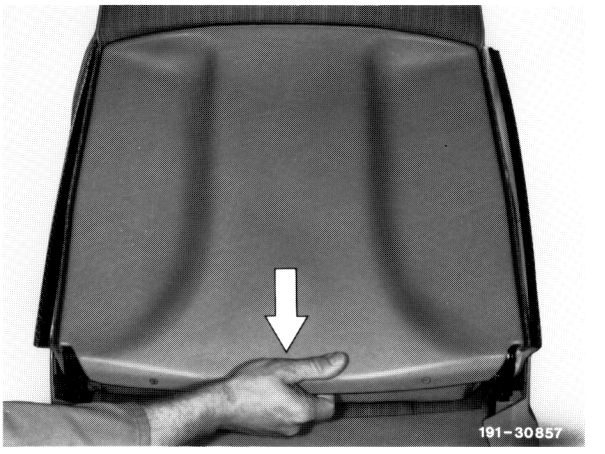

Shown with driver's seat removed

91–502 Removal and installation of front belt tensioner

Note

Replacement instructions for belt tensioner, refer to repair instructions "Body – Assembly jobs II, Model 201", job number 91–550.

Functional description, test instructions and safety instructions are included in microfilm Airbag and Belt tensioner.

When reeling up belt, noises on automatic reel are functional noises.

In the event of a complaint, excessive noises can be eliminated by replacing the belt tensioner. Never use oil or grease to eliminate noises.

Likewise, do not disassemble the automatic reel, since the preloaded spring may cause accidents. Automatic reels which have been opened are no longer recognized as a warranty case.

Complaint:

Lock tongue on belt twisted

Remedy:
For belt as shown on illustration and pull lock tongue over belt into normal position.

B. Coupe

Side wall trim in rear passenger comp. removed (68–456)
Driver's and front passenger seat removed (91–100/11),
when belt buckle 7 is removed.

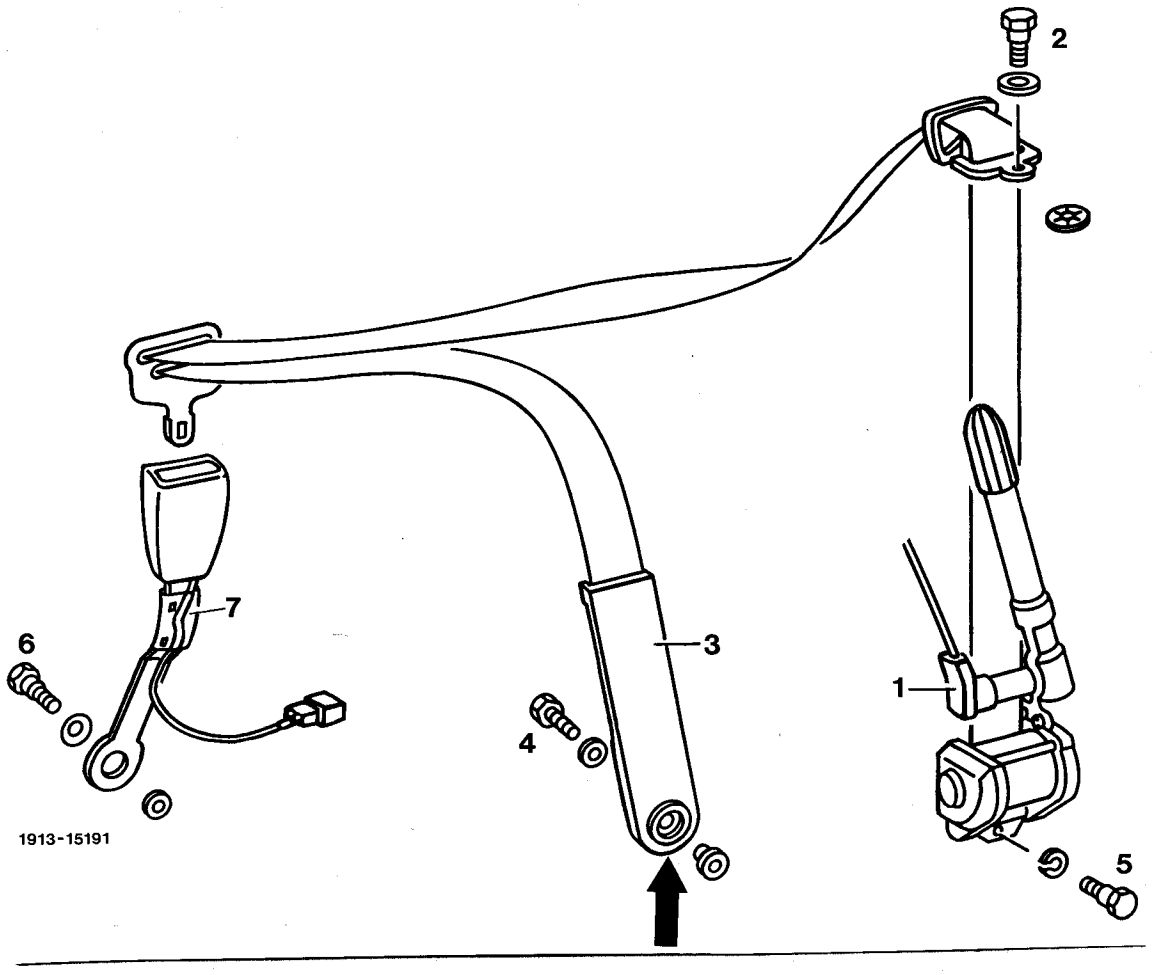

Ignition key in 0-position	turn
Battery negative pole	disconnect and insulate
With airbag 10-point plug connection	separate
Plug connection (1) of belt tensioner ignition pellet	pull off
Screw (2) on belt guide fitting	unscrew (35 Nm)
Trim (3) of swivel fitting	open with plastic wedge (arrow), pay attention to installation note
Screw (4) on side member	unscrew (35 Nm).
Screw (5) on automatic reel	unscrew (35 Nm) and remove belt tensioner. Pay attention to installation note

A. Sedan and T-sedan

Removal, installation

1 Turn ignition key into 0 position, disconnect battery negative pole and cover.

2 Remove trim on center pillar (68–470).

3 Unscrew screw on belt guide fitting.

4 Pull off plug connection, remove screw on belt tensioner and take off belt tensioner.

5 Remove driver's or front passenger's seat (91–100 or 91–110).

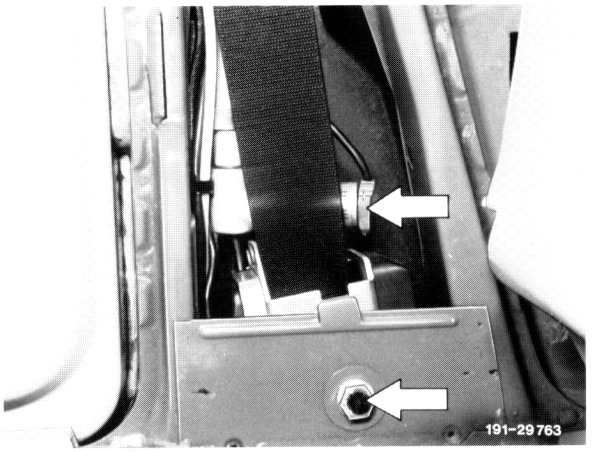

6 Remove screw on belt lock while applying counterhold to belt lock.

7 Remove belt lock.

8 For installation proceed vice versa.

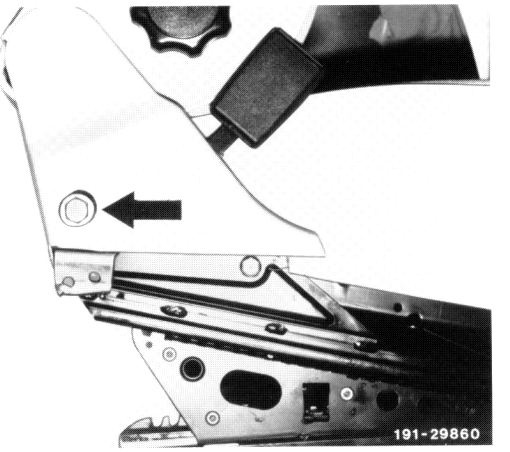

Cover on reclining seat fitting	pull toward the rear, pull off laterally and remove
Screw (6) on belt buckle	unscrew
Cable straps under seat cushion	open
Belt buckle complete with line (7)	remove

For installation proceed vice versa.

Installation note

When installing belt tensioner, pay attention to different versions (left and right) and to perfect seat in lock.

1 When installing a new belt tensioner, open trim on swivel fitting with plastic wedge.
Screw in screw on side member (35 Nm).
Close cover on swivel fitting.
Pull out lock for holding spring on swivel fitting.

2 For re-installation of removed belt tensioner, place coil spring with plastic insert into swivel fitting top and engage spring.

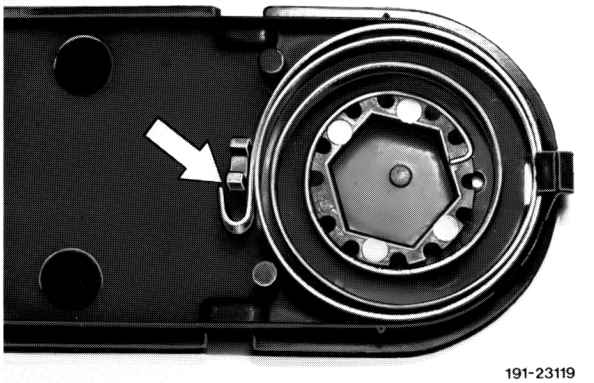

191-23119

3 Insert hex. socket wrench into plastic insert and pretension spring by 180°.

191-23118

4 Make special tool
(unless already available)

a	45 mm
b	Ø 4 mm
c	35 mm
d	8 mm
e	Ø 4 mm
f	Ø 2 mm
g	24 mm
h	40 mm
i	1.5 mm
j	8 mm

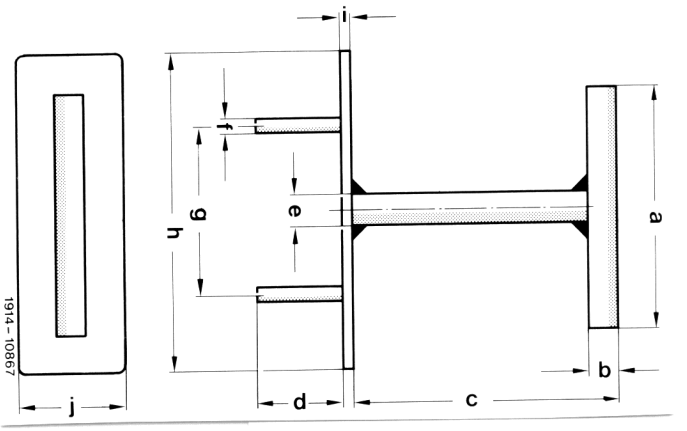

5 Lock preloaded plastic insert from back of top by means of special tool

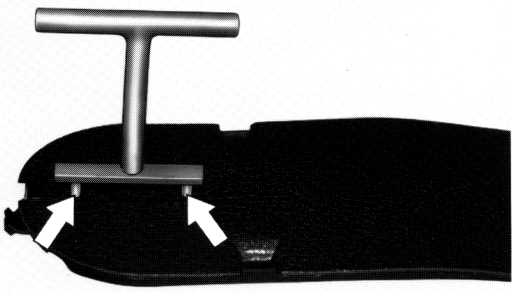

191-23125

Note: The swivel fitting on side member should pull the seat belt, if it is not worn, downward into rear corner under influence of spring, so that no downward loop will be established.
Following installation, check whether belt is completely rolled up.
To check, pull belt out diagonally in downward direction and feed back manually together with catch of buckle up to guide bracket of belt positioner.

The so-called open/closed signal for the affected side is set (in control unit memory) when the affected doors are moved from the open to the closed position. This signal is set regardless of the ignition key position, elapsed time and whether the belt tongue is inserted into the belt buckle. The door open/closed signal is reset 60 min. after the last change in the door contact or the ignition/starter switch. This time limitation reduces the number of so-called ghost functions, i.e. unnecessary extension of the seat belt extender when the front seat is not occupied.

(Automatic) activation of a seat belt extender starts the following cycle: The seat belt extender moves to the foremost position, then – without pausing – back approx. 25 mm (time-controlled) to the so-called offering position. Here the seat belt extender arm waits 30 s and then moves to the rearmost position. If the cycle was actuated automatically the stored door open/closed signal is cancelled after completion of the complete offering time of 30 s. However if, during this cycle, one of the following actions is accomplished before completion of the offering time, the affected seat belt extender moves to its initial position immediately and any door open/closed signal present is not cancelled:

1. The seat belt tongue is inserted into the belt buckle associated with the affected seat belt extender (signal from belt buckle switch).
2. The affected door is opened (signal from door contact switch).
3. The ignition/starter switch is turned to position 0 (affects both seat belt extenders).

If the seat belt extender meets an opposing force during extension, the seat belt extender arm stops and moves back approx. 25 mm (time-controlled) however not farther than to the rearmost stop, for relief and remains there for 1 s. This operation can be repeated a maximum of 7 times when the opposing force is present for a longer period. If the foremost position is not reached after the eighth attempt, the arm returns to its original position.

If the seat belt extender arm does not actuate one of the 3 microswitches

Extender arm extended switch (A10s2, A11s2),
Extender arm retracted switch (A10s1, A11s1)
Force limit switch (A10s3, A11s3)

within 8 s when the motor is receiving power, the so-called total switch-off is actuated. This causes the seat belt extender arm to move back immediately to the stop (the motor (A10m1, A11m1) runs for 8 s in the retract direction when the polarity was in the extend direction before expiration of the operating time of 8 s). Then no more signals of any type are output for the affected seat belt extender by the control unit (N42). After total shut-off the system can be put back into operation by turning the ignition/starter switch from position 0 to 1.

The left and right seat belt extenders have no effect on one another.

Diagnosis is described in the Diagnosis Manual, Body, Volume 3.

Preliminary work:
Side wall panelling in rear removed (68–456).

A. Coupe

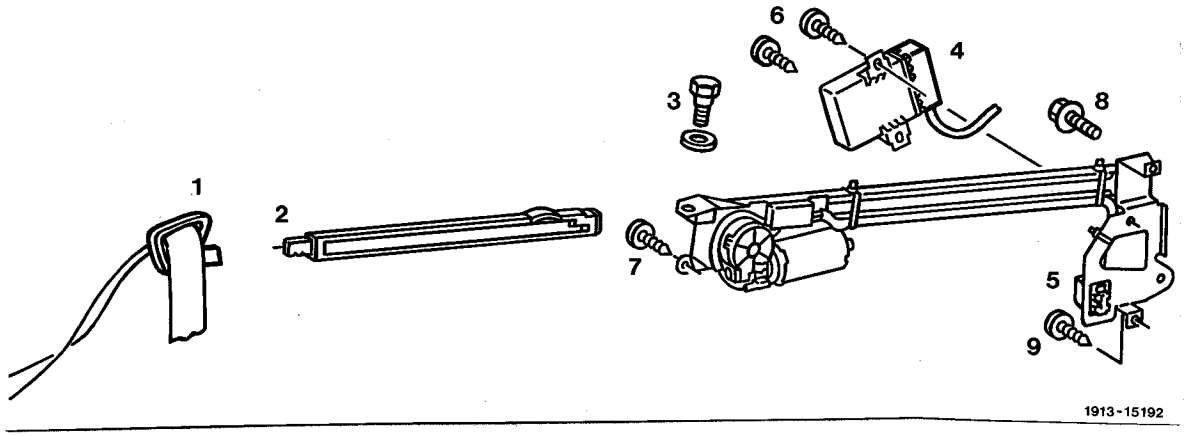

Ignition/starter switch	turn to position 0.
Ground lead on battery	disconnect, connect.
Guide (1)	remove from rack together with seat belt, install.
Bolt (3) for seat belt guide fitting on B-pillar	screw off, screw on (35 Nm).
Plug connection (4) on control unit and seat belt extender (5)	disconnect, connect.
Screws (6) on control unit	screw out, screw in.
Control unit	remove, install.
Screws (7), (8), (9) on seat belt extender	screw out, screw in.
Seat belt extender	remove, install.

B. Convertible

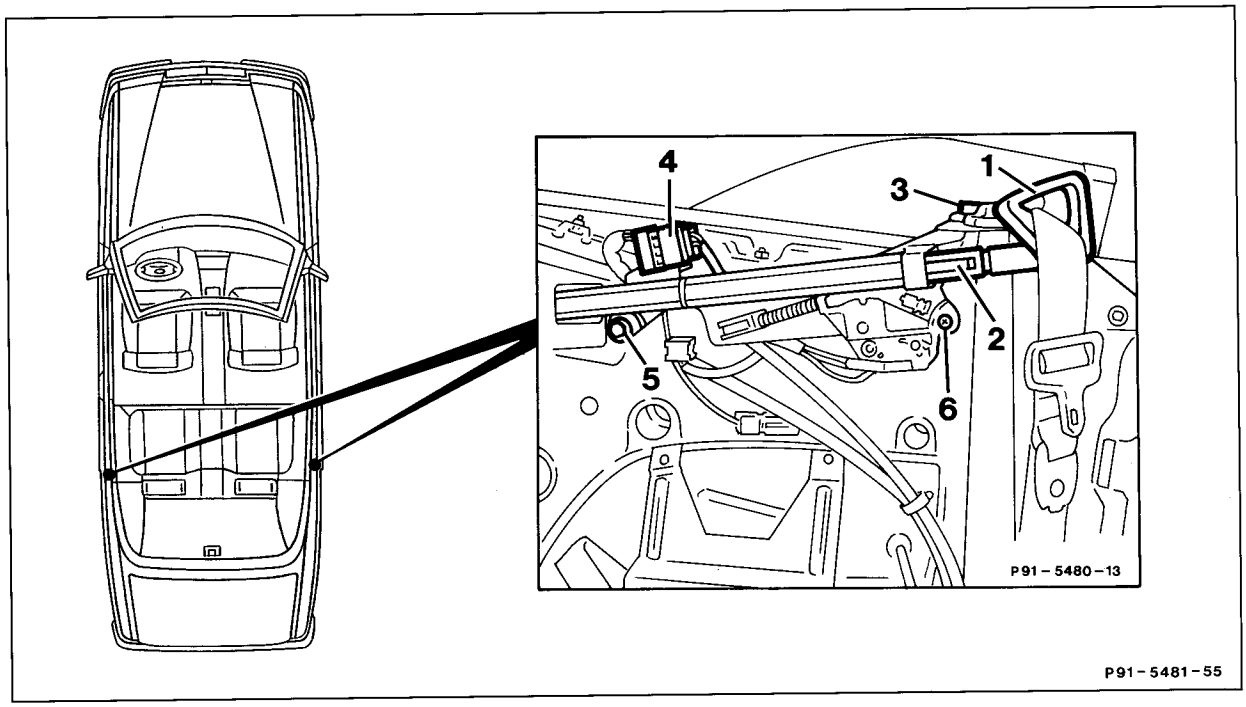

Ignition/starter switch	turn to position 0.
Ground lead on battery	disconnect, connect.
Guide (1)	remove from rack (2) together with seat belt, install.
Bolt (3) for seat belt guide fitting on B-pillar (observe note)	screw off, screw on (35 Nm).
Plug connection (4) to control unit	disconnect, connect.
Screws (5, 6) on seat belt extender	screw out, screw in.
Seat belt extender	remove, install.

Note

Before removing mark the position of the mounting tab on the guide fitting with a felt tip pen in order to avoid adjustment. Otherwise the seat belt extender could scrape against the side wall panelling when extending and retracting.

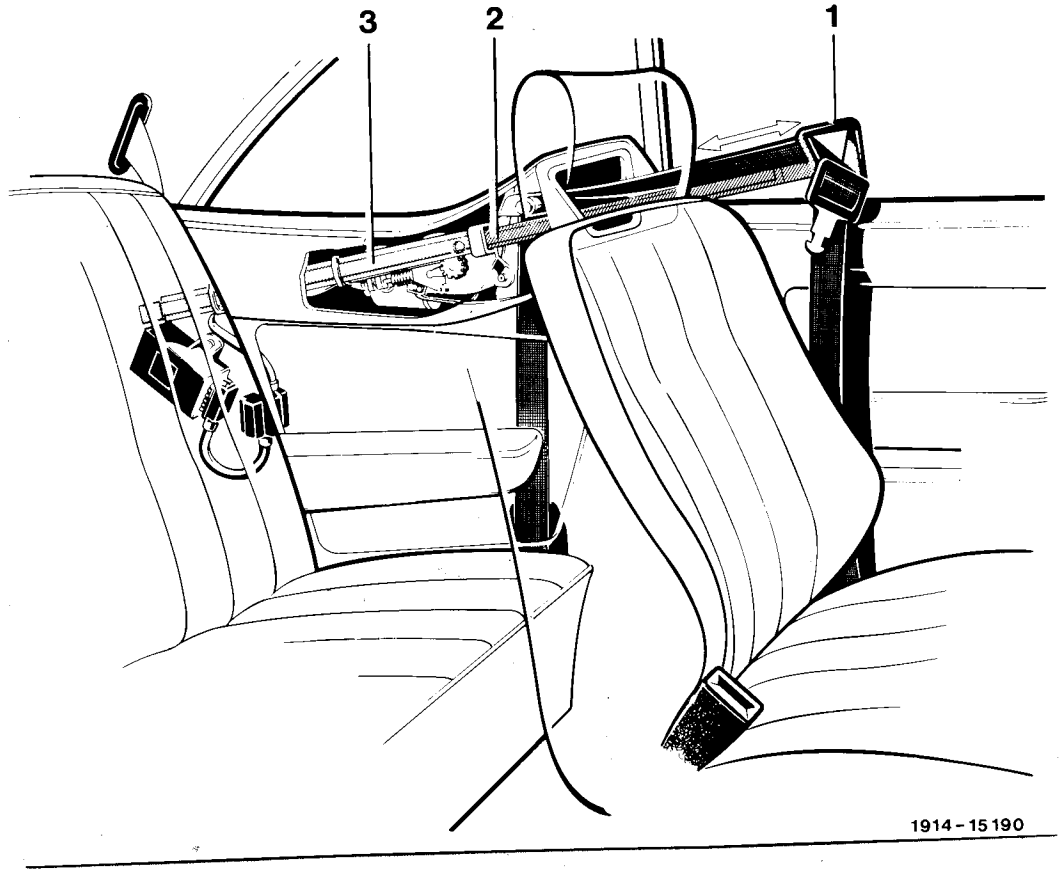

Removal

Seat belt extender	move to offering position by switching on ignition and closing door.
Ground lead on battery	disconnect (within 30 s).
Guide (1)	remove from rack (2) together with seat belt.
Rack(2)	pull out of guide rail (3).

Installation

Rack (2)	insert into guide rail (3) approx. 50 mm (see also note).
Guide (1)	install.
Ground lead on battery	connect.

Note

The retraction depth of the rod can be adjusted with the slide (arrow). For this purpose move seat belt extender to offering position and push slide forward or back.

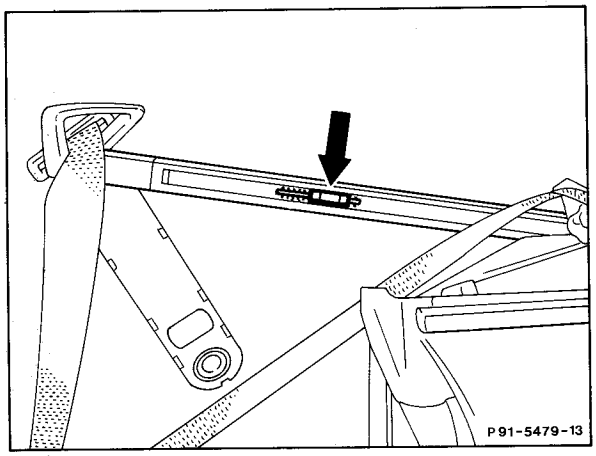

A. Sedan

Note

When reeling up belt, noises on automatic reel are functional noises.

In the event of a complaint, excessive noises can be eliminated by replacing the seat belt. Never use oil or grease to eliminate noises.

Likewise, do not disassemble the automatic reel, since the preloaded spring may cause accidents. Automatic reel which have been opened are no longer recognized as a warranty case.

Complaint:

Buckle tongue on belt twisted

Fold belt as shown on illustration and pull buckle tongue over belt into normal position.

Belt buckle tongue stuck between rear door and wheelhouse (vehicles as of 09/89 only)

Note

Modified rear safety belts were phased in starting in September 1990. When the belt is completely rolled up the buckle tongue on the modified rear seat belts is located directly above the seat cushion. This prevents the buckle tongue from getting into the wheelhouse. Moreover, the belt rolls up more easily.

If complaints are received regarding the way in which the rear seat belts roll up on vehicles produced earlier, proceed as follows:

Procedure

Check rear seat belts:
With the rear pillar trim installed pull buckle tongue down to seat cushion, then release; the seat belt should roll up automatically (arrow). If not, proceed as follows:

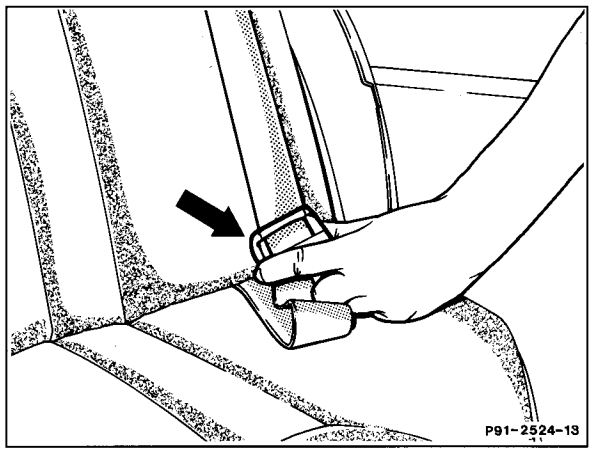

1 Remove trim on rear pillar (RI 68-449).

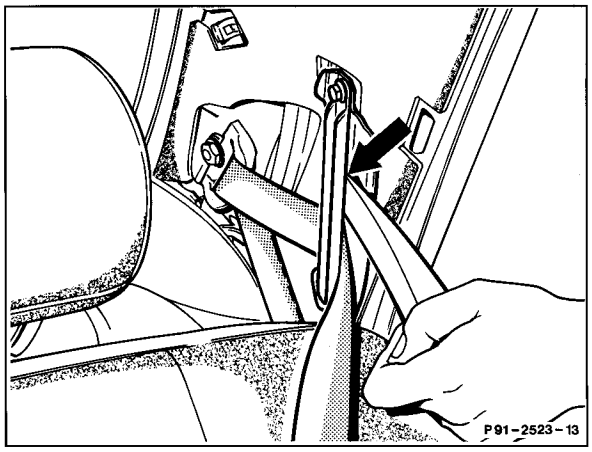

2 Measure gap between panel and bracket (nominal dimension: min. 1.7 mm), increase gap with plastic wedge, if required (arrow).

3 Check belt guide fitting for easy motion. If hard to move proceed with points 4 and 5 below.

4 Unscrew belt guide fitting. Remove toothed washer on mounting bolt and turn over spacer below. Reinstall toothed washer and screw belt guide fitting back on (arrow).
Tightening torque: 35 ± 10 Nm

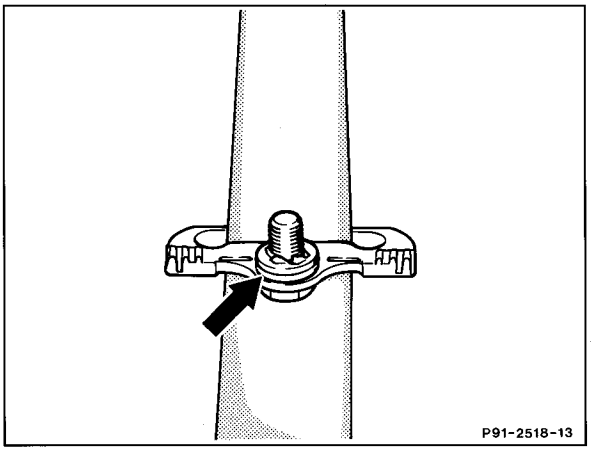

5 Check belt guide fitting for easy motion.

6 Cut out vapor seal on rear panel trim (shaded area) and remove reinforcement ribs (arrow).

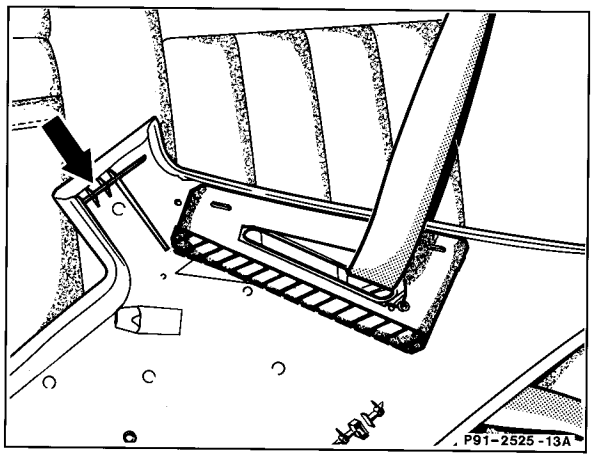

7 Reinstall rear pillar trim.

8 Measure downward 270 mm from previous plastic rivet and mark with chalk.

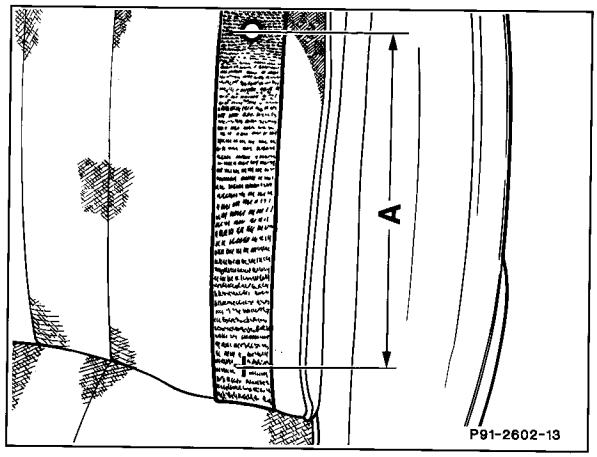

A = 270 mm

9 Insert new plastic rivet through belt webbing with tip toward front. Attach bottom section of rivet and press plastic rivet together with combination pliers or water pump pliers. The tip of the rivet should not extend beyond the bottom section of the rivet.

10 Press out and remove previous plastic rivet with plastic wedge.

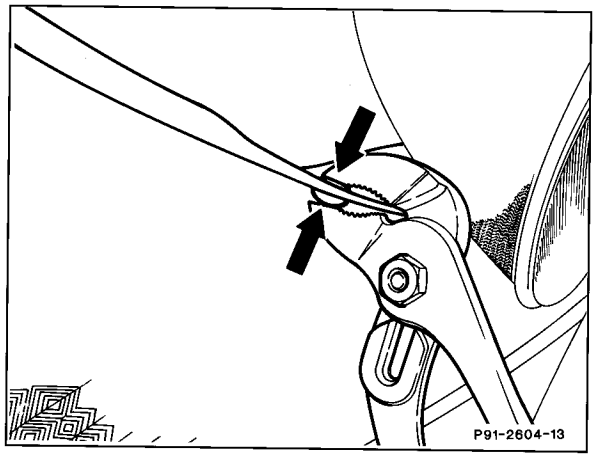

11 When the belt is rolled up completely the buckle tongue should be located directly above the seat cushion (arrow).

Note
It is necessary to move the buckle tongues down on both rear seat belts.

12 Check for proper function.

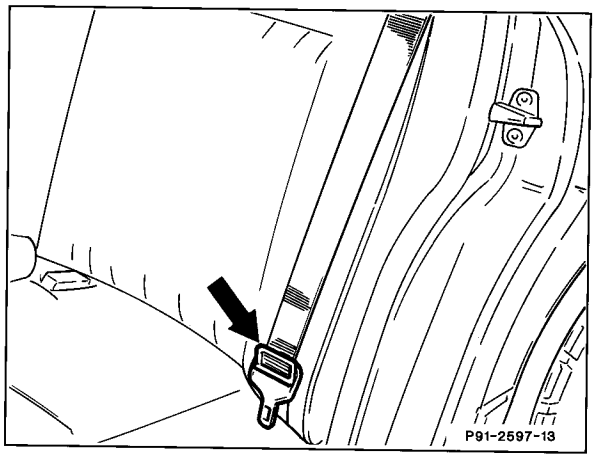

Removal, installation

1 Remove rear backrest (91–170).

2 Remove trim on rear pillar (68–449).

3 Screw out bolt on belt guide fitting (35 Nm).

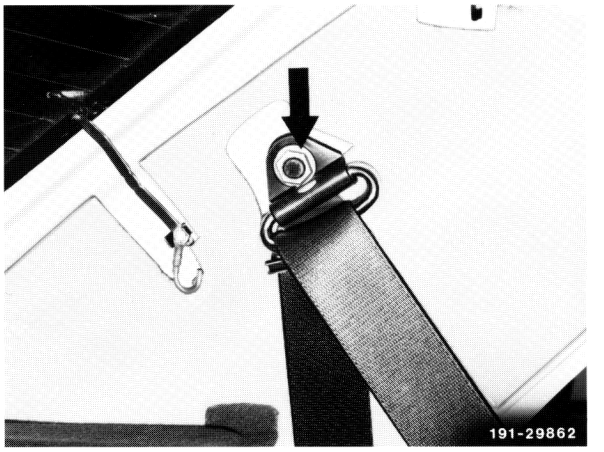

1st version

4 Screw out bolts (1 and 2).

5 Loosen bolt (3).

6 Remove belt guide fitting.

7 Unhook insulating mat on rear wall in area of belt reel.

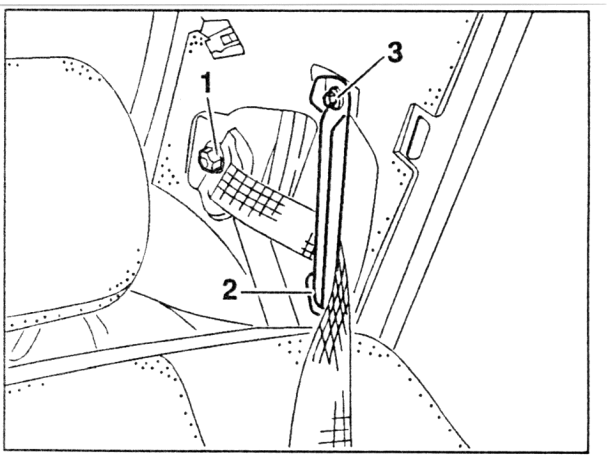

P91.10-0250-01

2nd version

8 Screw out bolt on belt reel and remove belt reel (35 Nm).

91.0767-51014

9 Screw out bolt on belt buckle and remove belt buckle (35 Nm).

10 Reinstall in opposite order.

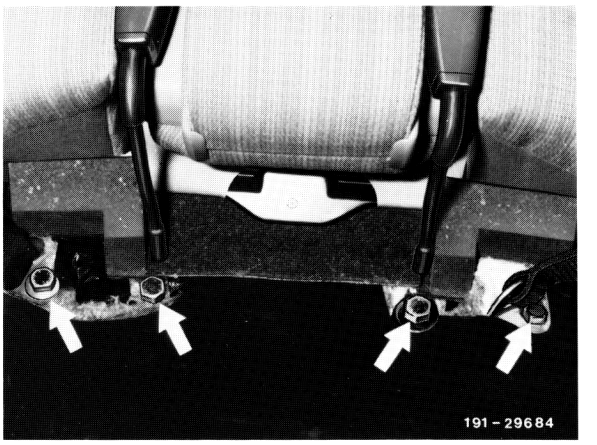

Note: When installing the belt reel ensure that it is seated properly in the detent (arrow).

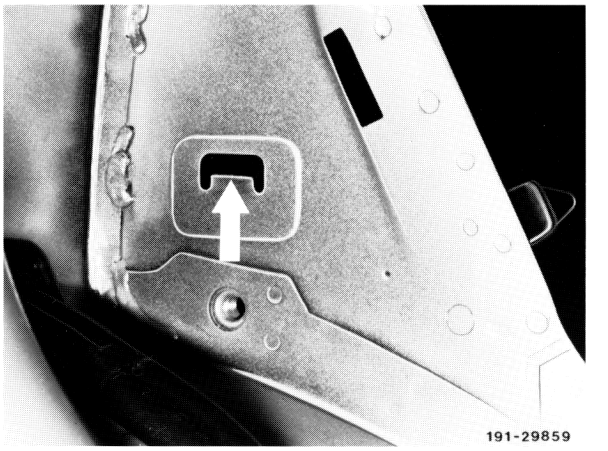

B. T-sedan

1 Remove and install trim on center pillar rear (68–475).

2 Remove and install trim in rear compartment (68–478).

3 Loosen screw for seat belt inertia roller on base plate.

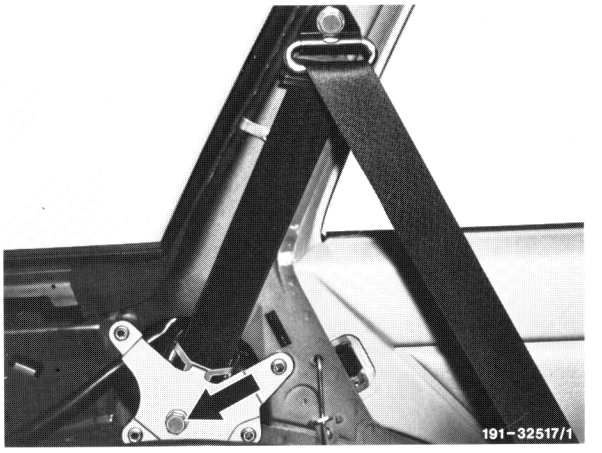

4 Unscrew screws (4 each) and remove seat belt inertia roller together with base plate.

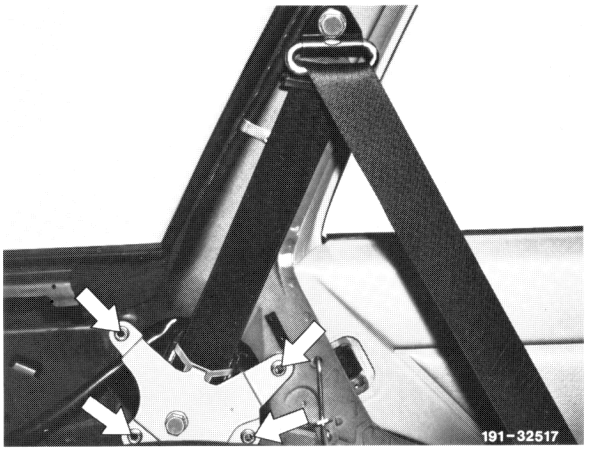

5 Unscrew screw on belt guide fitting at top.

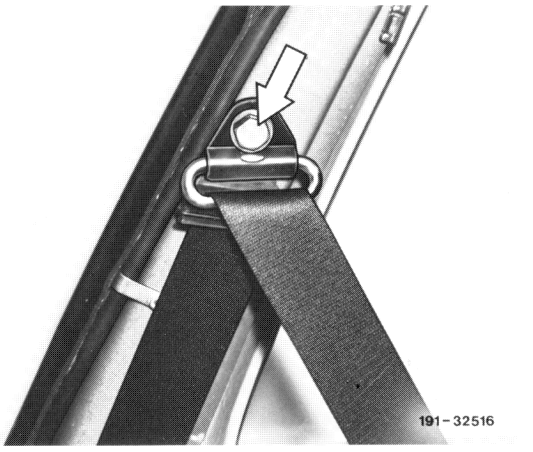

6 Unscrew belt end fitting on vehicle floor.

7 Unscrew base plate from seat belt inertia roller.

8 Pull belt strap out of cutout in center pillar trim and remove seat belt inertia roller.

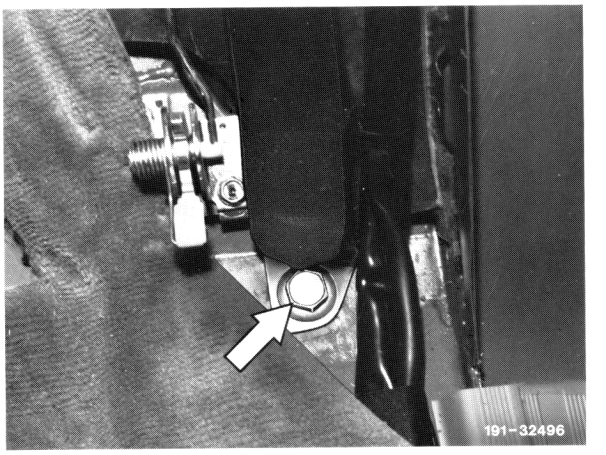

9 For installation proceed vice versa.

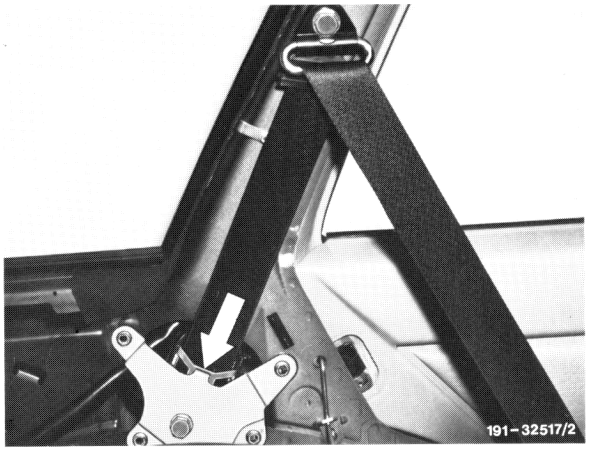

Installation note

When installing seat belt inertia roller pay attention to perfect locking (arrow).

C. Convertible

Preliminary work:
Removal and installation of side wall panelling (68-456)

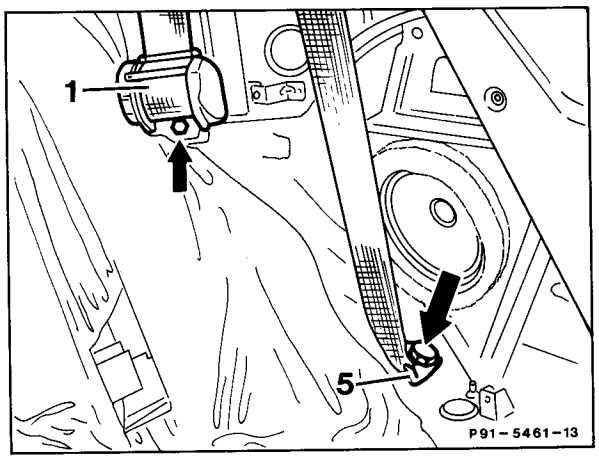

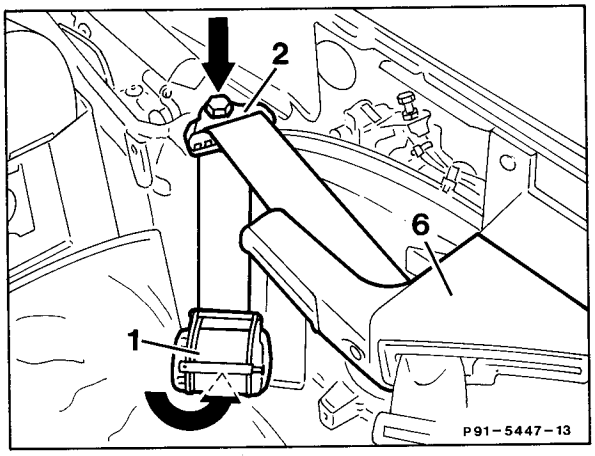

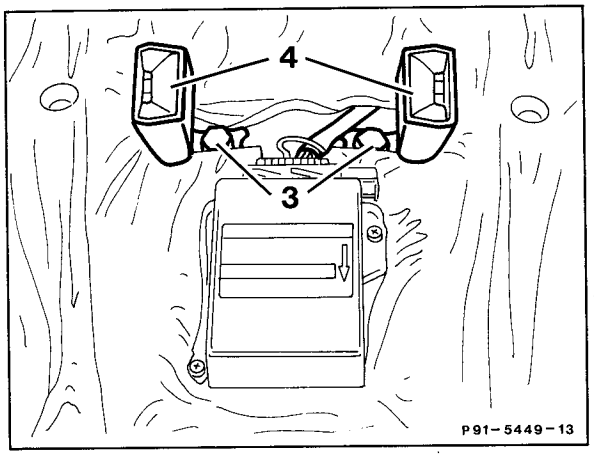

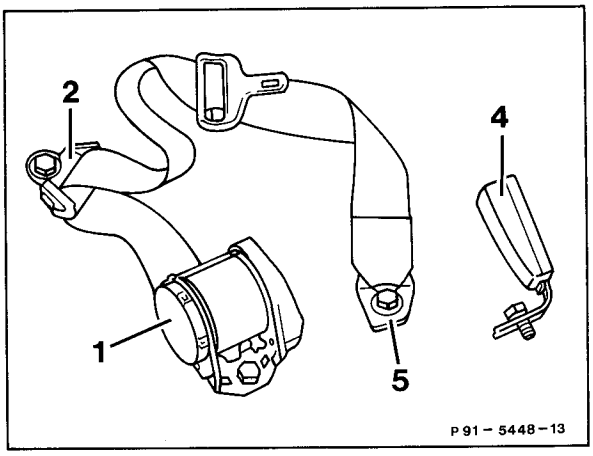

Bolt (arrow) on seat belt end fitting (5)	screw out, screw in (35 Nm, item 3).
Seat belt end fitting (5)	guide through side wall panelling (6).
Bolt (arrow) on seat belt inertia roller (1)	screw out, screw in (35 Nm).
Bolt (arrow) on guide fitting (2)	screw out, screw in (35 Nm, item 2).
Seat belt	remove completely together with seat belt inertia roller (1), install (item 1).
Bolt (3) on seat belt buckle (4)	screw out, screw in (35 Nm).
Seat belt buckle (4)	remove, install (item 1).
Function	check.

1 When installing the seat belt inertia roller (1) and seat belt buckle (4) ensure that the rotation lock engages in the components indicated.

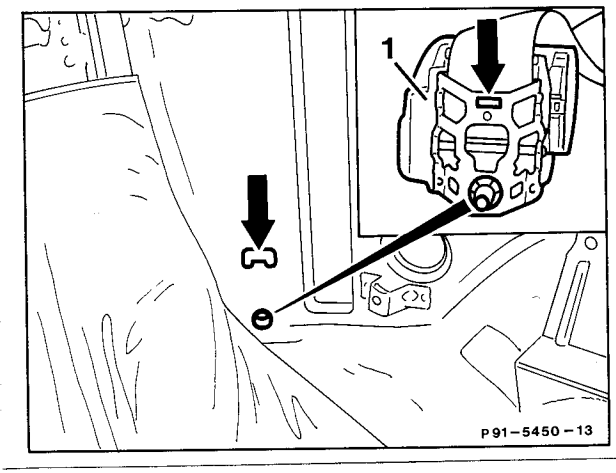

Arrow = rotation lock
Seat belt inertia roller

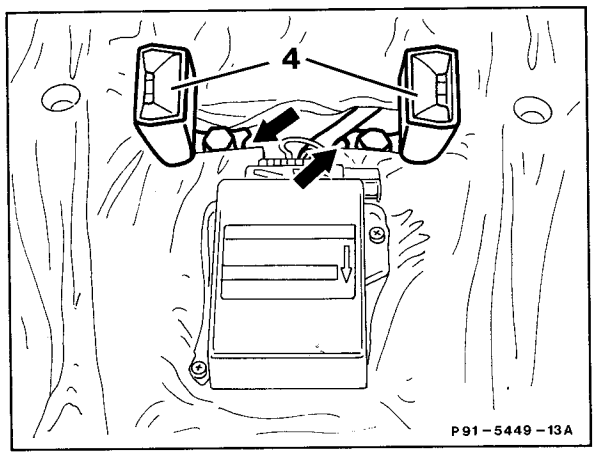

Arrow = rotation lock
Seat belt buckle mount

2 Screw top seat belt guide fitting (2) on so that it can move.

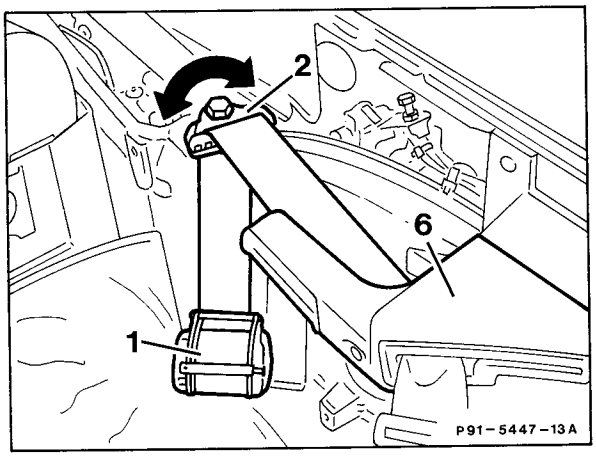

3 Observe installation position of seat belt end fitting (5).

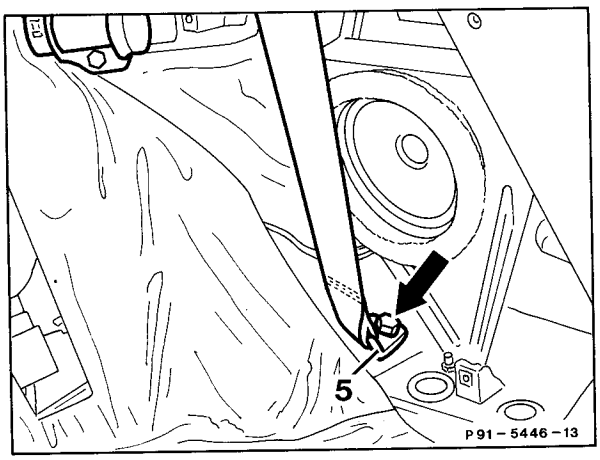

91–515 Removal and installation of seat belt extender microswitch complete with lead

Preliminary work:
Seat belt extender removed (91-508)

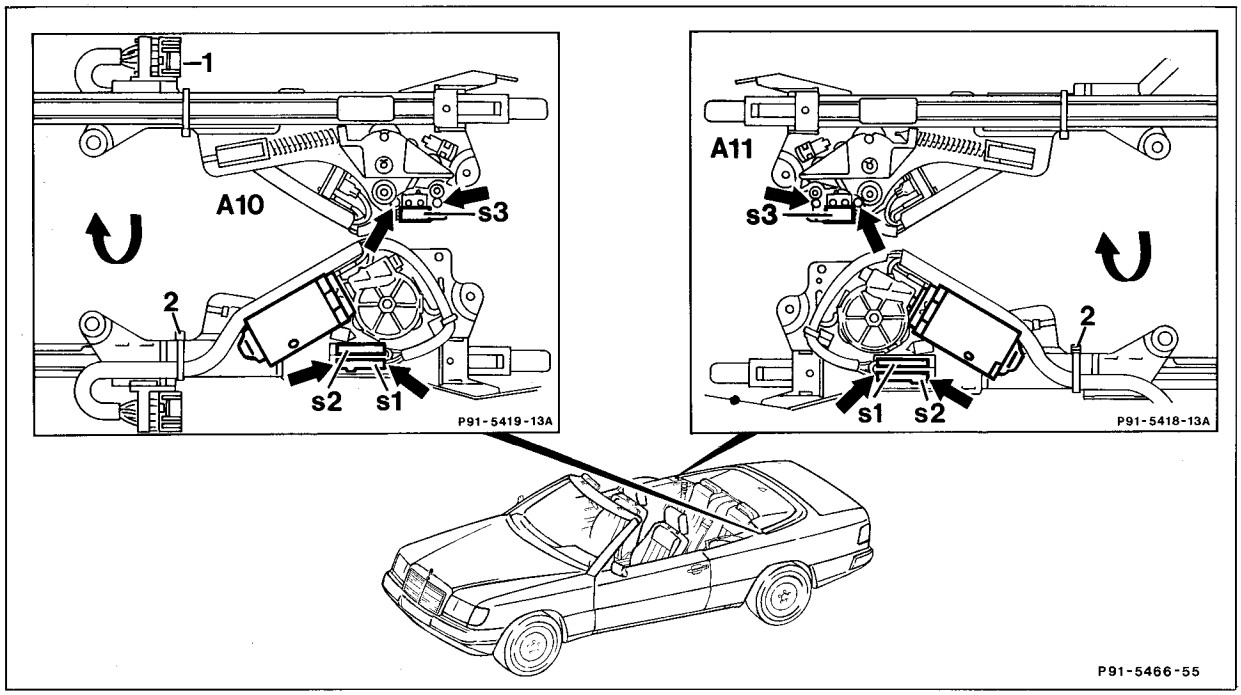

A10 and A11 Seat belt extender left and right
A10s1 and A11s1 Extender arm retracted switch
A10s2 and A11s2 Extender arm extended switch
A10s3 and A11s3 Force limit switch

Plug connection (1) on control unit	disconnect, connect.
Cable strap (2)	open, close.
Flat plug connections on motor	disconnect, connect.
Screws (arrows) for microswitch	screw out, screw in.

Note

Secure mounting screws for microswitch with screw securing paint.

Plug connection (1) on mount	hook, hook in.

91–520 Removal and installation of seat belt extender control unit

Preliminary work:
Rear seat removed (91-170)

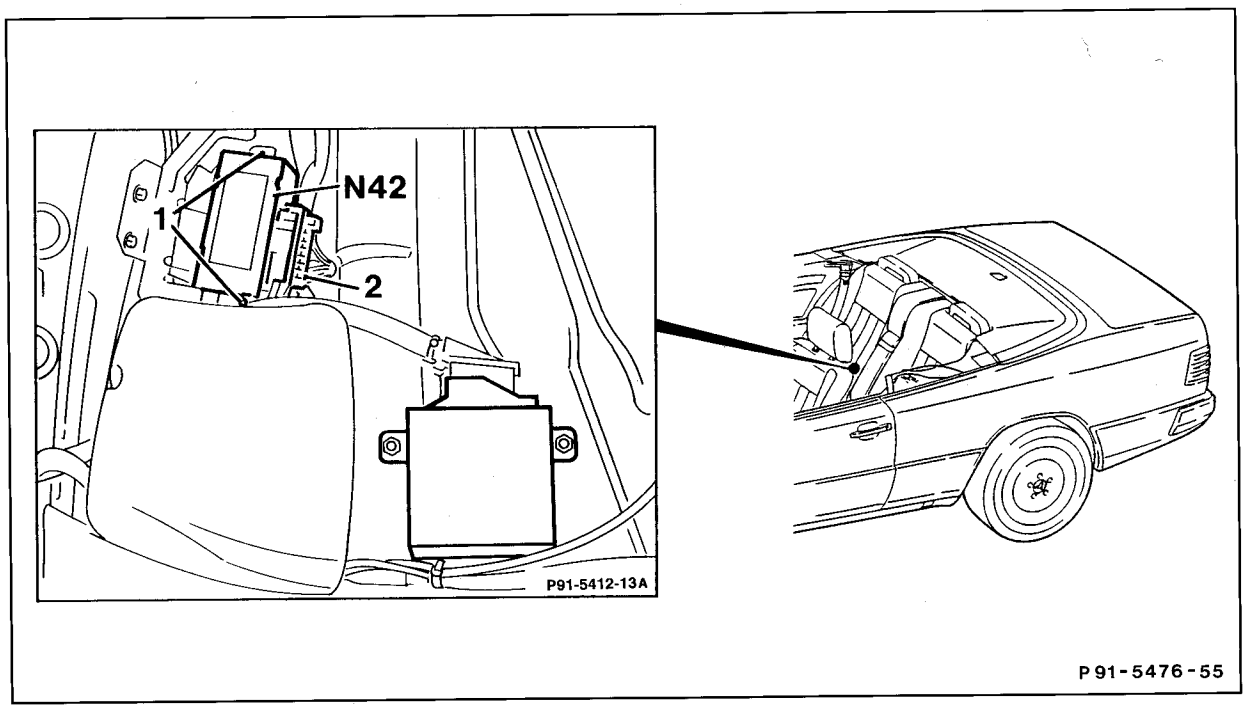

Ignition/starter switch	turn to position 0.
Ground lead on battery	disconnect, connect.
Screws (1)	screw out, screw in.
Plug connectors (2) on control unit (N42)	disconnect, connect.

A. General

The driver airbag unit in the steering wheel and the passenger airbag unit installed in place of the glove box, in conjunction with the belt tensioners for the seat belts and the energy-absorbing panels on the driver's and/or passenger's side, serve to increase the level of protection provided by the three-point seat belts installed as standard equipment, when these are worn.

Both systems are electrically activated by a single control unit in the event of moderately severe to severe frontal collisions. Current knowledge indicates that the entire (intact) driver/passenger airbag unit maintains its full functional reliability for at least 10 years. In contrast to the three-point seat belt which only affords protection when it is applied, the occupants of the vehicle have no influence over the protective effect of the airbag and belt tensioner restraint system. For increased protection it is essential that the three-point seat belt is applied and the restraint system consisting of driver's airbag and belt tensioner is installed. The restraint system of driver's and passenger's airbag and belt tensioner, only provides increased protection in the event of a frontal collision. An occupant **not** wearing the three-point seat belt remains **unprotected** in side and rear end collisions, or if the vehicle overturns.

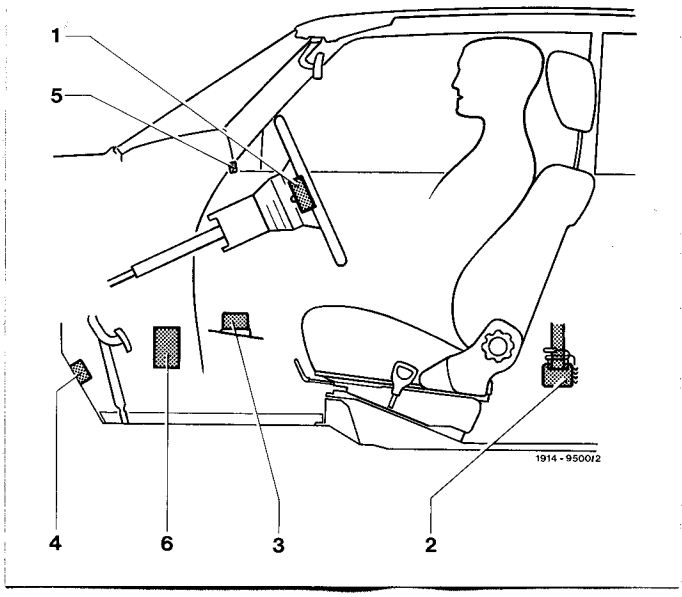

Driver's airbag

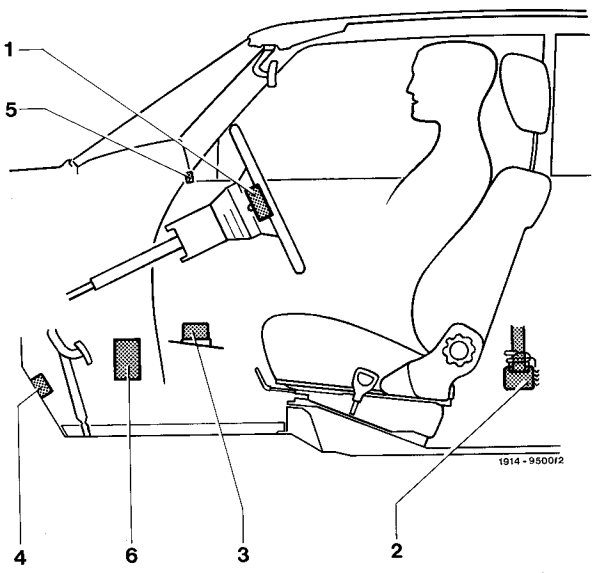

Illustrated for model 126

1 Airbag unit
2 Belt tensioner
3 Control unit (sensor)
4 Reserve power source
5 Warning lamp
6 Voltage transformer

Driver's airbag (USA)

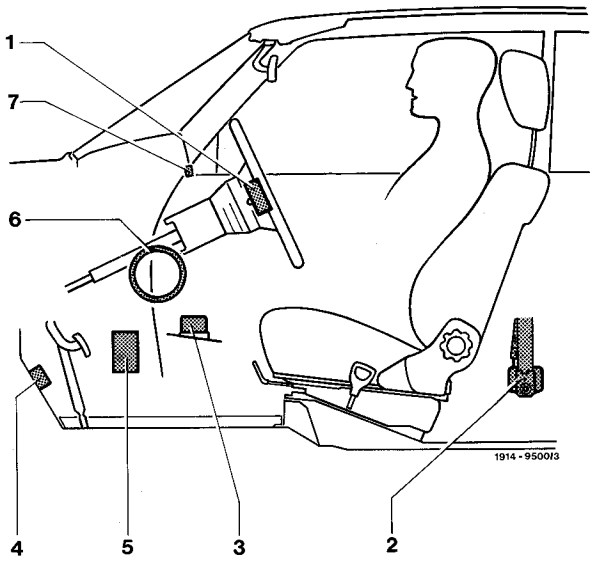

Illustrated for model 126, (USA) version

1 Airbag unit
2 Belt tensioner
3 Control unit (sensor)
4 Reserve power source
5 Voltage transformer
6 Energy-absorbing panel under dashboard (driver's side)
7 Warning lamp

Driver's airbag

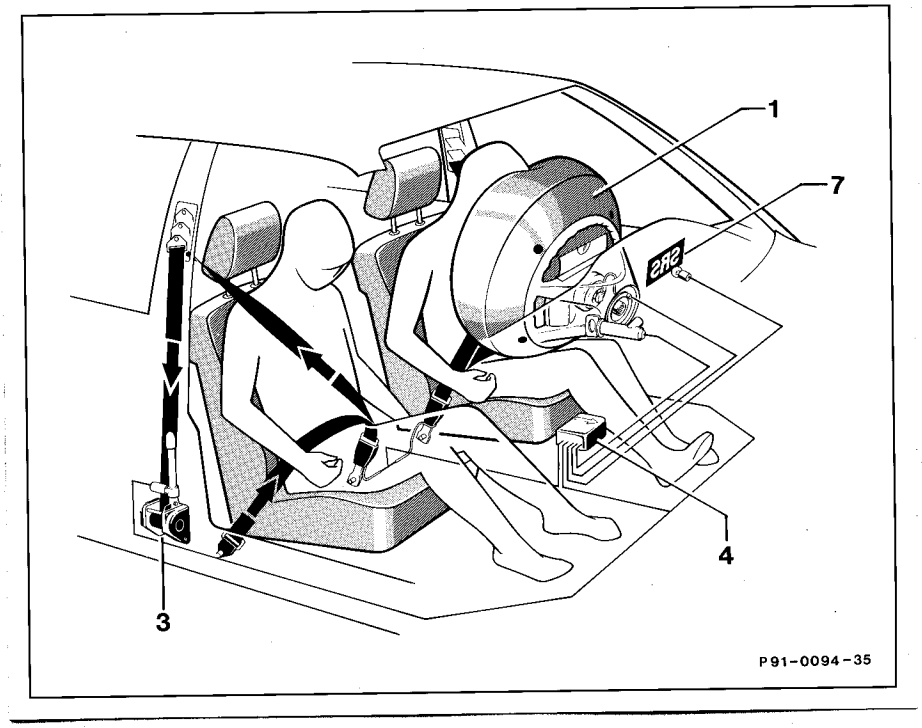

Illustrated for model 124 as of 09/87

1 Driver airbag unit
3 Belt tensioner (left and right)
4 Control unit
7 RS/SRS warning lamp

Driver's airbag (USA)

Illustrated for model 124 as of 09/87, (USA) version

1 Driver airbag unit
3 Belt tensioner (left and right)
4 Control unit
5 Energy-absorbing panel under dashboard (driver's side)
7 RS/SRS warning lamp

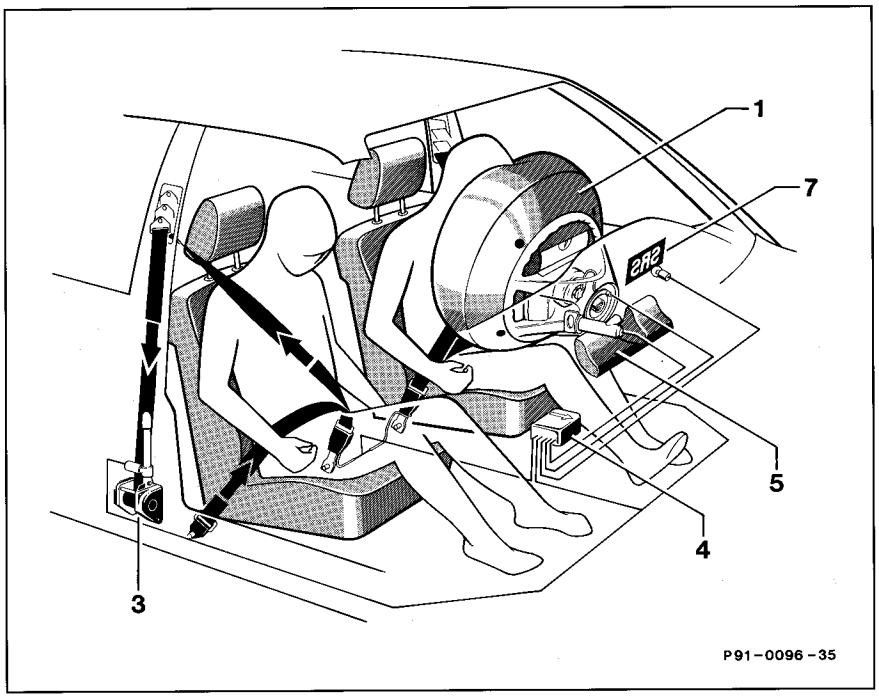

Driver's and passenger's airbags

Illustrated for model 124 as of 09/87

1 Driver airbag unit
2 Passenger airbag unit
3 Belt tensioner (left and right)
4 Control unit
7 SRS warning lamp

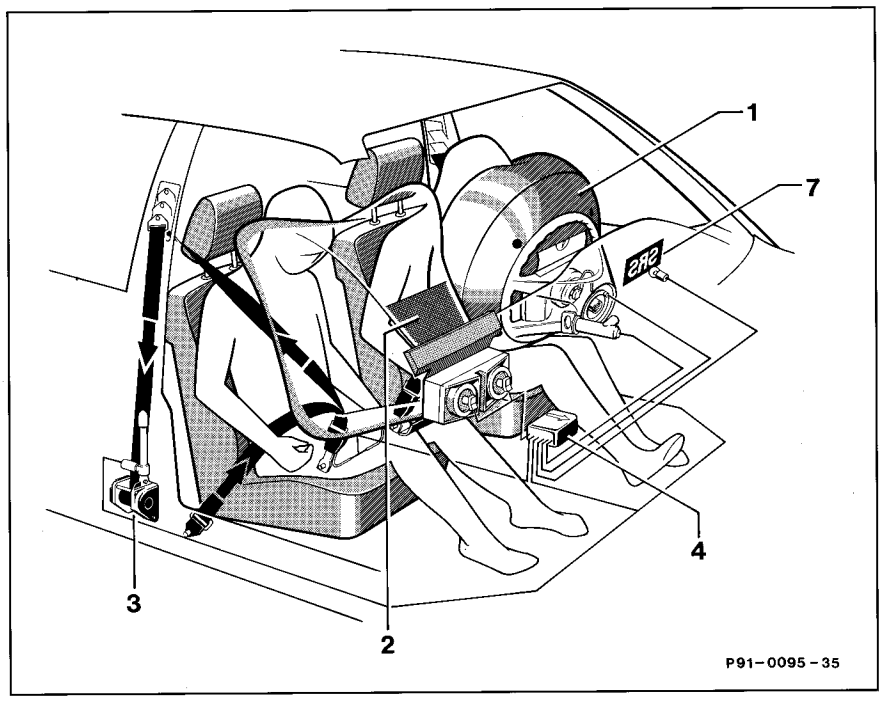

Driver's and passenger's airbags

(USA)

Illustrated for model 124 as of 09/88, (USA) version

1 Driver airbag unit
2 Passenger airbag unit
3 Belt tensioner (left and right)
4 Control unit
5 Energy-absorbing panel under dashboard (driver's side)
6 Energy-absorbing panel under dashboard (passenger's side)
7 SRS warning lamp

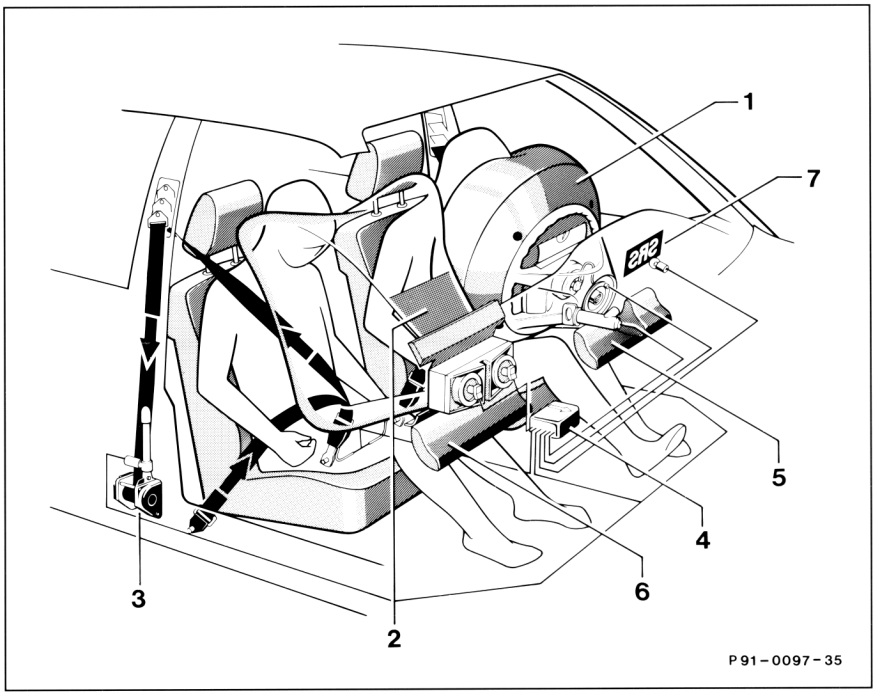

Arrangement of components in vehicles up to 09/87

1 Driver airbag unit
in the steering wheel for all models

R 12/3

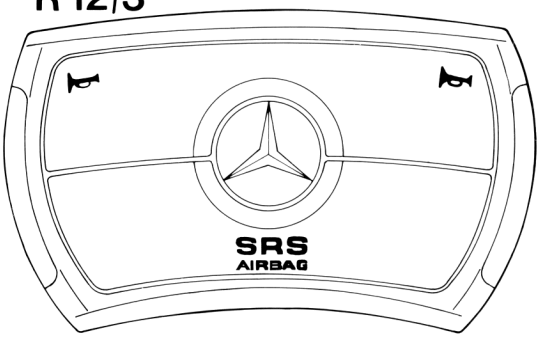

1914-15826

3 Control unit
on the tunnel in front of the gear shift lever

191-33786

4 Reserve power source

Model 124 1st version, under passenger's foot rest

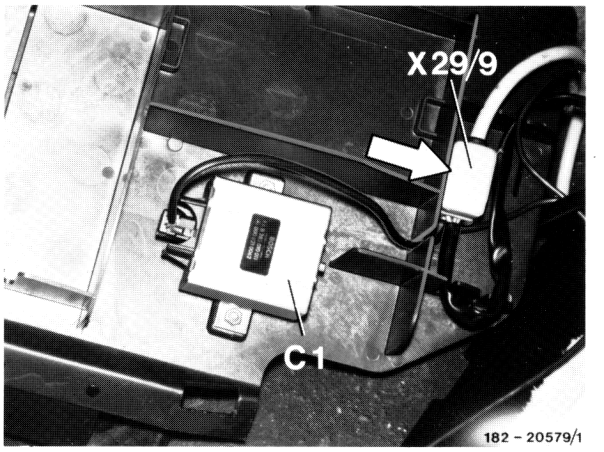

C1 Reserve power source

Model 124 2nd version, under side panelling in passenger's footwell

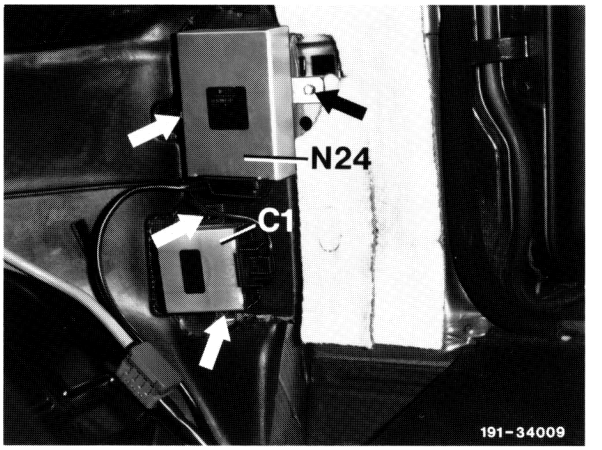

C1 Reserve power source

5 RS warning lamp

in right-hand half of instrument cluster for all models

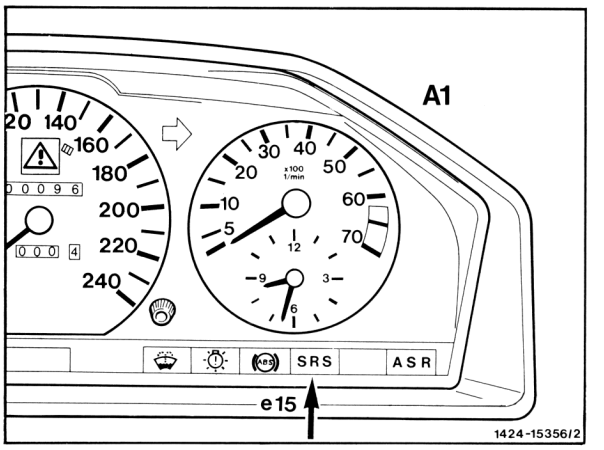

A1e15 RS warning lamp

6 Voltage transformer

Model 124 1st version, under passenger's foot rest

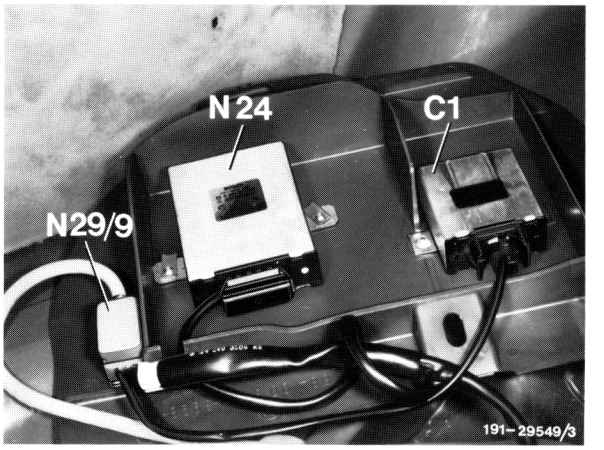

N24 Voltage transformer

Model 124 2nd version, under side panelling in passenger's footwell

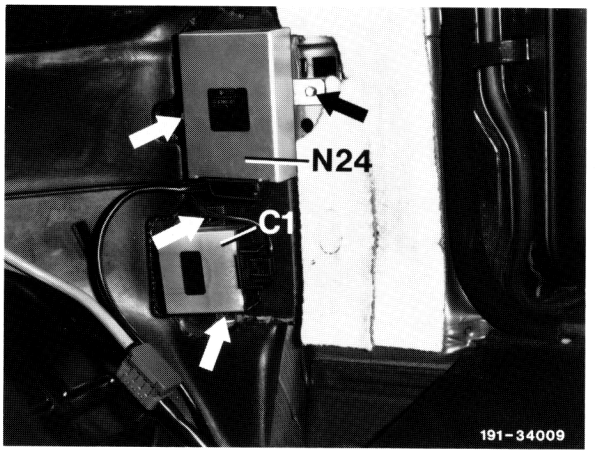

N24 Voltage transformer

Note

The components listed above are located at the same points in (USA) version vehicles. In addition, an energy-absorbing panel is installed under the dashboard.

Arrangement of components for driver's airbag as of 09/87

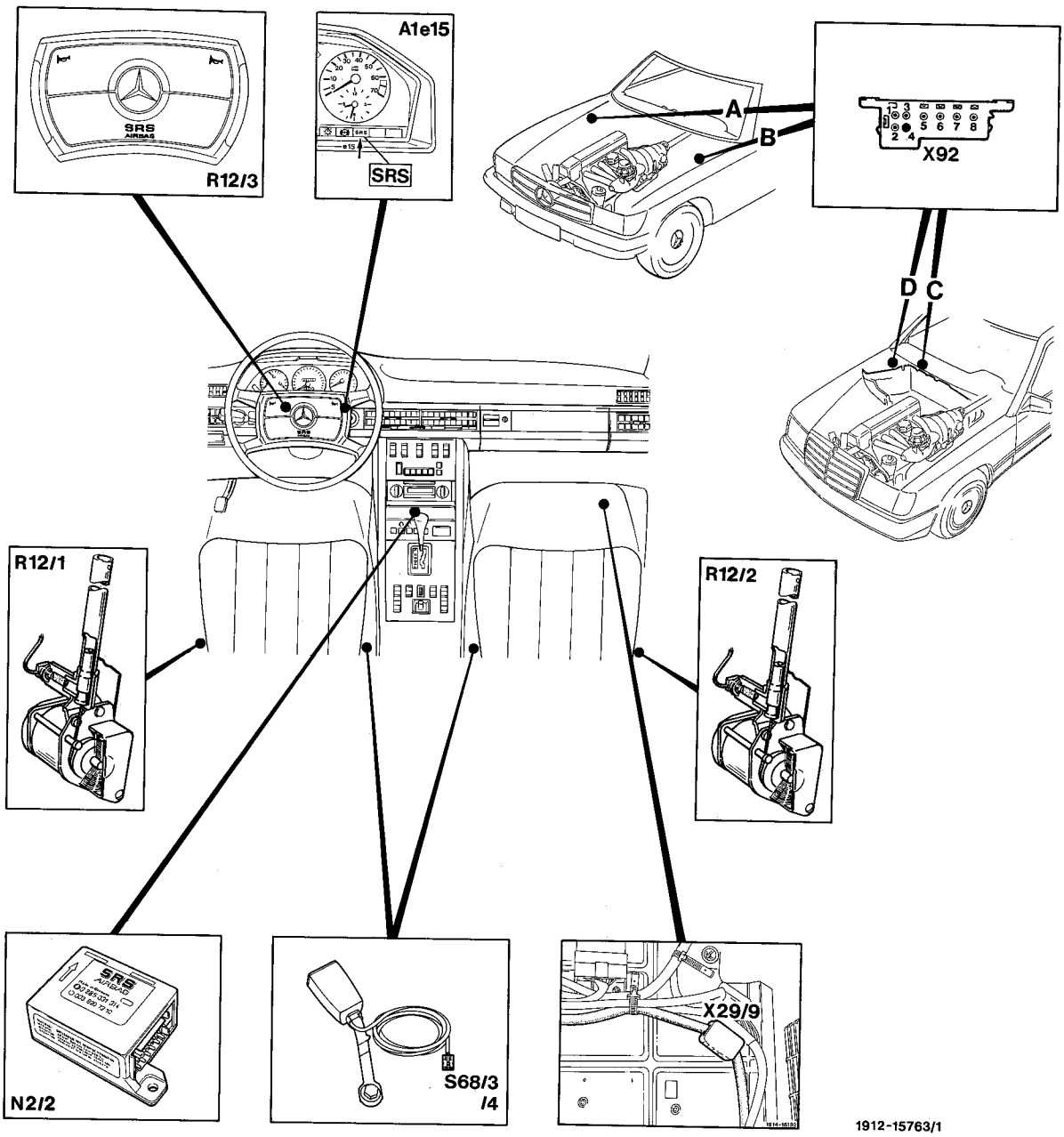

A1e15	Airbag warning lamp (RS/SRS)
N2/2	Control unit, belt tensioner with airbag
R12/1	Detonator, belt tensioner, driver's side
R12/2	Detonator, belt tensioner, passenger's side
R12/3	Detonator, driver's airbag
S68/3	Switch for belt buckle/airbag, belt tensioner, driver
S68/4	Switch for belt buckle/airbag, belt tensioner, passenger
X29/9	Test coupling/plug connection, airbag, 10-pin
X92	Test coupling for diagnosis, 8-pin (flashing code) D, model 124

Arrangement of components for driver's and passenger's airbags as of 09/88

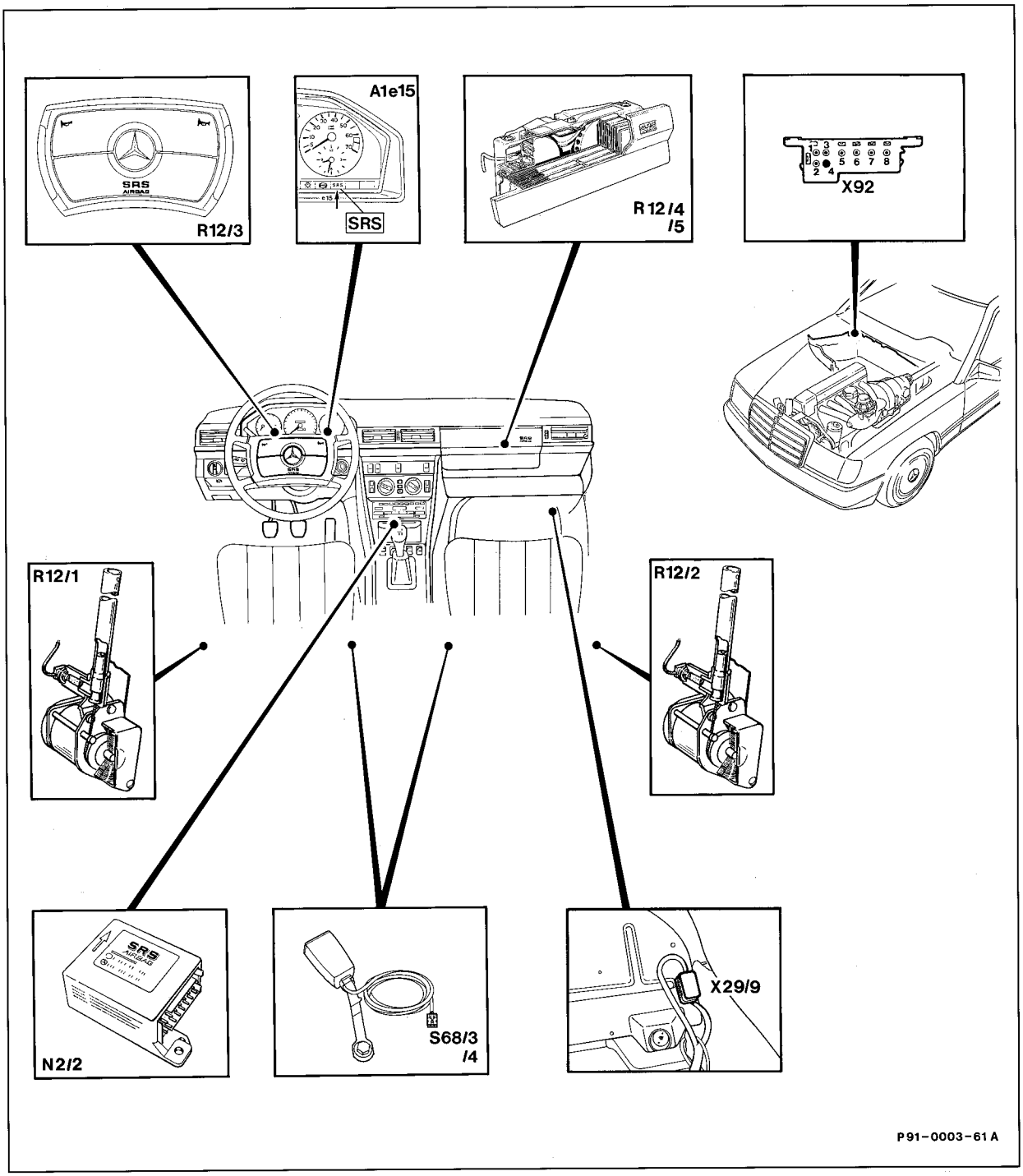

A1e15	Airbag warning lamp (RS/SRS)
N2/2	Control unit, belt tensioner with airbag
R12/1	Detonator, belt tensioner, left seat
R12/2	Detonator, belt tensioner, right seat
R12/3	Detonator, airbag (driver)
R12/4	Detonator 1, airbag (passenger)
R12/5	Detonator 2, airbag (passenger)
S68/3	Switch for belt buckle/airbag, belt tensioner, driver
S68/4	Switch for belt buckle, passenger, belt tensioner,
X92	Test coupling for diagnosis, 8-pin (flashing code)

Adhesive labels for replacement date of airbag units

Adhesive label for replacement date of driver airbag unit up to 09/87

An adhesive label with the replacement date of the airbag unit is located on the inside of the glove box lid on the left-hand side.

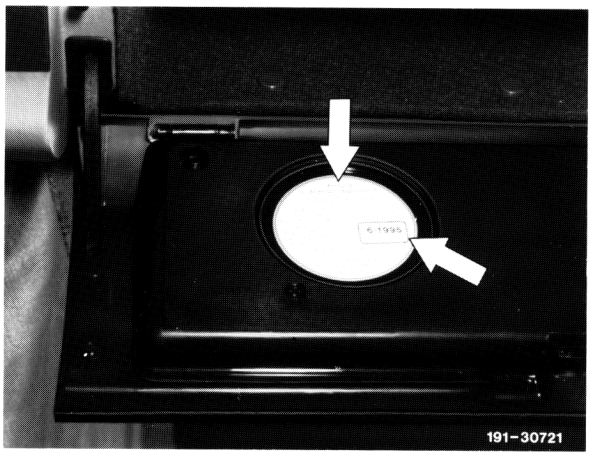

Adhesive label for replacement date of driver airbag unit as of 09/87

An adhesive label with the replacement date of the airbag unit is located on the left-hand center pillar below the latch striker.

Illustrated for model 126

Adhesive label for replacement date of driver and passenger airbag units as of 09/88

An adhesive label with the replacement date of driver and passenger airbag units is located on the left-hand center pillar below the latch striker. The replacement date always applies to the entire driver/passenger airbag unit. The replacement period is at least 10 years.

1914-15701/1

Driving with the airbag and belt tensioner restraint system

When the ignition key is moved from position "1", the red warning lamp marked "RS" or "SRS" in the instrument cluster lights up.

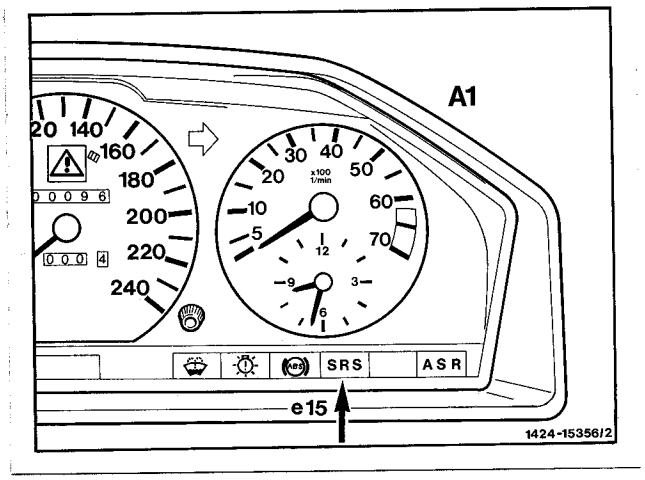

The warning lamp indicates the readiness of the airbag and belt tensioner restraint system. It must light up from key position "1" and go out again after approx. 10 s in vehicles up to 09/87, or after approx. 4 s in vehicles as of 09/87. If it does not light up, or fails to go out after the specified period, or if it lights up when driving, there is a fault in the system. The time of the fault is registered by the control unit and can be called up at a later date.

⚠

If this fault display appears, the entire system must be examined as soon as possible by specialist personnel using the airbag tester (in vehicles up to 09/87) or by means of pulse output (in vehicles as of 09/87).

This does not impair the operation of the driver's and passenger's seat belts installed as standard equipment.

The full airbag and belt tensioner restraint system consists of the following components:

B. Driver airbag unit
C. Passenger airbag unit
D. Belt tensioner unit
E. Control unit
F. Reserve power source (up to 09/87)
G. Warning lamp
H. Voltage transformer (up to 09/87)
I. Energy-absorbing panels under the dashboard (USA only)

B. Driver airbag unit

Design

The driver airbag unit consists of:

signal carrier,
cushion with integral airbag,
retaining plate and
gas generator.

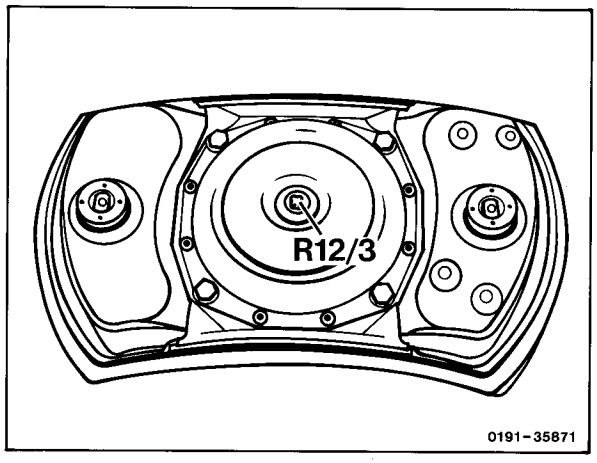

The safety element proper is the airbag which is inflated within 25 ms to fill the space between the driver and the steering wheel.

The complete driver airbag unit is bolted to the steering wheel installed in the vehicle after connecting the special plug connection (55).

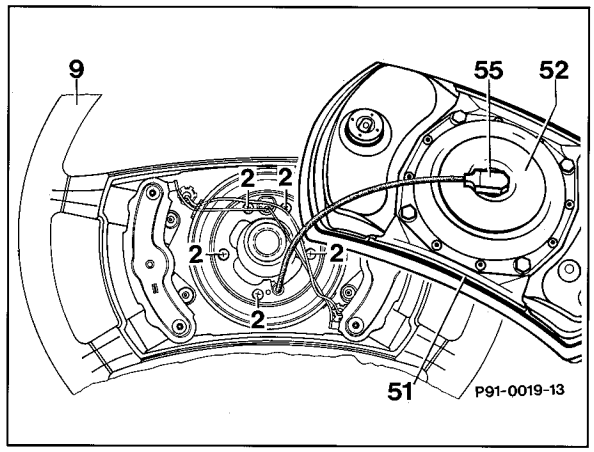

9 Steering wheel
51 Driver airbag unit
52 Gas generator
55 Plug connection

Before the driver airbag unit is fitted in the vehicle, it is electrically shorted automatically by means of a short-circuiting link. The short-circuiting link is automatically opened when the plug connection (55) is plugged in.

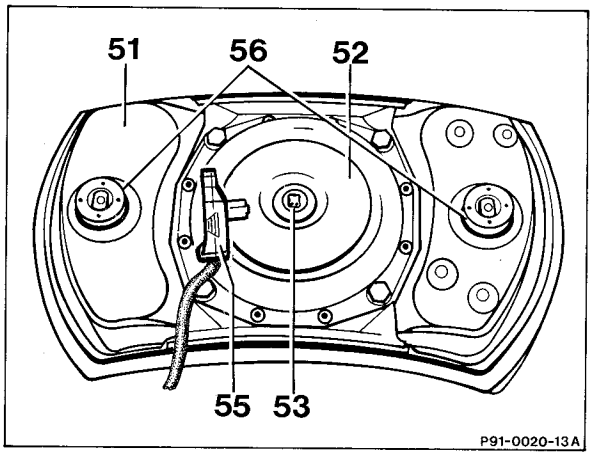

51 Driver airbag unit
52 Gas generator
53 Gas generator plug connection
55 Plug connection
56 Generator carrier with special nuts.

Method of operation

When the control unit sends the appropriate electrical pulse (ignition pulse) to the detonator located inside the gas generator, the solid fuel in the gas generator is ignited. The fuel burns within an extremely short time releasing a certain quantity of gas at a certain pressure. The gas is guided into the airbag via filters.

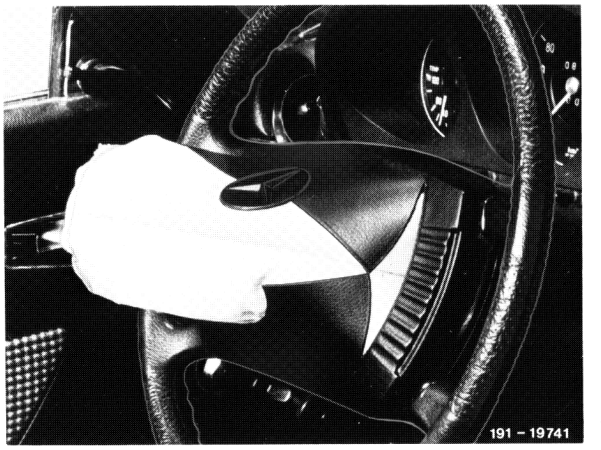

The nylon fabric airbag folded on top of the gas generator tears open the cushion at a predetermined breaking point. The gas rigidly inflates the airbag, thus preventing the driver's head from colliding with the steering wheel. After approx. 60 ms the gas has escaped through 4 vents or through a filter section in the airbag, and the airbag collapses.

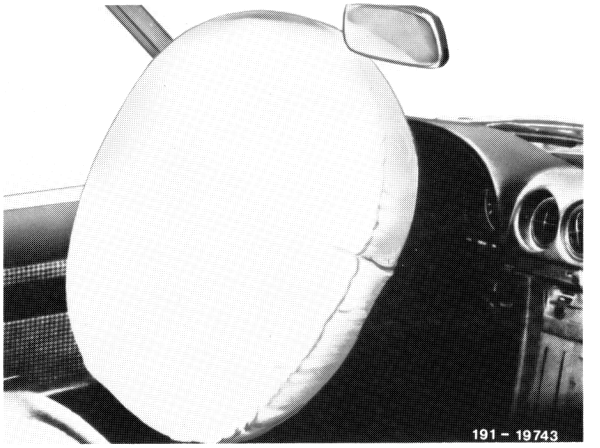

C. Passenger airbag unit

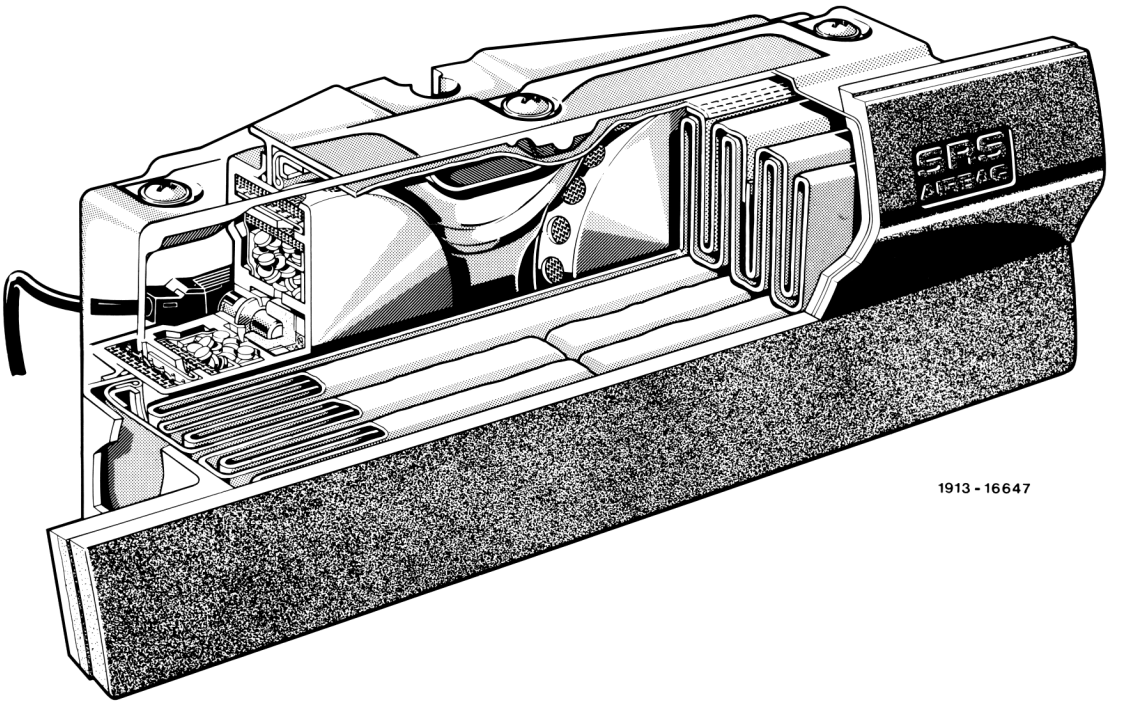

Passenger airbag unit

In the event of a severe frontal collision, the risk of injury to the chest and head area is further reduced by the combined system of seat belts with belt tensioners and driver's and/or passenger's airbag, in comparison to the seat belts with belt tensioners installed as standard equipment.
The driver and passenger airbag units bear the inscription "SRS Airbag". The warning lamp is marked "SRS" (Supplemental Restraint System).

The passenger airbag unit is installed in place of the glove box.

The complete passenger airbag unit consists of a die-cast light alloy frame bearing on one side **two** gas generators (of the same type used in the driver airbag unit) and on the other side, the folded airbag with its cover.
The passenger's airbag is made of a similar material to the driver's airbag (Neoprene-coated polyamide fabric) in 4 sections sown together, and has a volume of approx. 170 litres when inflated (driver's airbag approx. 60 litres).
The gas released during combustion of the solid fuel is approx. 95 % nitrogen. It is non-toxic and non-irritant. The shape of the passenger's airbag is completely different to that of the driver's airbag.

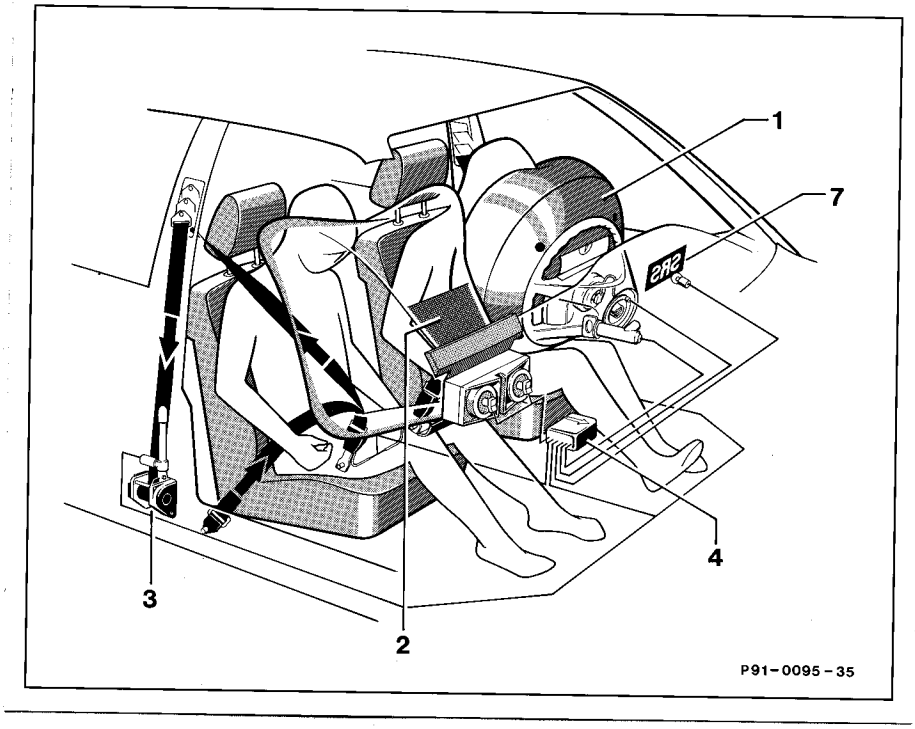

Driver's and passenger's airbags

The passenger's airbag is fitted with an insert of gas-permeable filter material on the side nearest the windshield to release the gas after inflation. The two gas generators of the passenger airbag unit are not ignited simultaneously but with a delay of 15 ms between the first and the second. In this way, inflation of the airbag is slightly prolonged, reducing the rate of pressure increase in the passenger compartment. The passenger's airbag inflates in around 35 ms (driver's airbag around 25 ms). The method of operation is identical to that of the driver airbag unit.

The complete passenger airbag unit must be introduced from the passenger-compartment side into the appropriately modified and reinforced dashboard after connecting the two special plug connections.
The passenger airbag unit is secured by a single bolt (2).
The passenger airbag unit is automatically shorted by means of two short-circuiting links before assembly in the vehicle. The short-circuiting links are automatically opened when the plug connections are plugged in.

The panelling below the dashboard as far as the passenger's footwell has been adapted to the modified shape in this region.
The airbag cover facing the front passenger is shaped so as to continue the line of the dashboard. The cover consists of grained PVC sheet, backed with polyurethane foam and reinforced with light alloy plates.

Passenger airbag unit (cross section)

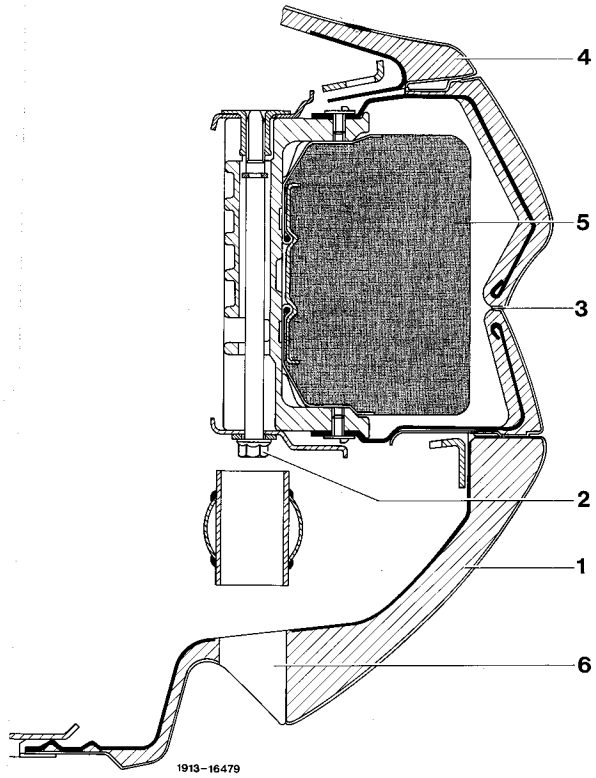

1 Panel under dashboard
2 Central retaining bolt for passenger airbag unit
3 Predetermined breaking point
4 Dashboard
5 Folded airbag
6 Bore

Passenger airbag unit (cross section), (USA) version

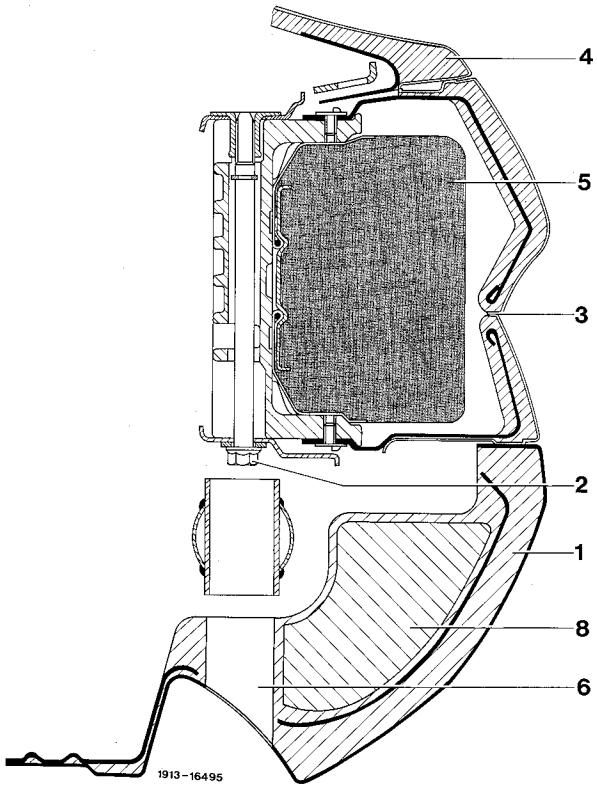

1 Panel under dashboard
2 Central retaining bolt for passenger airbag unit
3 Predetermined breaking point
4 Dashboard
5 Folded airbag
6 Bore
8 Energy-absorbing panel under dashboard (passenger's side)

D. Belt tensioner unit

Design of cable tensioner (2nd version as of 09/84)

Method of operation

The complete unit is installed in the left-hand and right-hand center pillars and connected electrically by means of an 2-pin plug. The belt tensioner unit is automatically shorted by means of a short-circuiting link before assembly in the vehicle. The short-circuiting link is automatically opened when the plug connection is plugged in. If the control unit sends an electrical pulse to the propellant capsule, high-pressure combustion gas is released. This propellant gas passes by way of a T-piece to the plunger which is accelerated upwards. The wire cable pulls on the cable pulley and rotates it, and thus the belt retractor, to tension the seat belt. This reduces any slack in the belt and prevents the so-called film-reel effect in the wound belt.

Test for triggering: A colored mark (green or yellow) is present on the cable to check whether the belt tensioner has been triggered.
If no colored mark is visible, the belt tensioner has been triggered and must be renewed. During the launch of this series, several vehicles were manufactured without this colored mark on the cable of the belt tensioner.

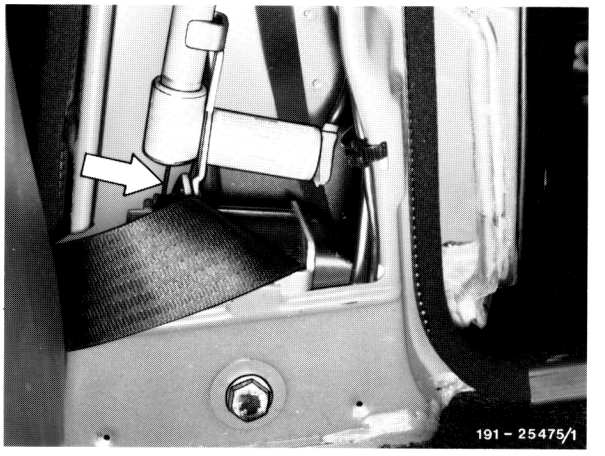

These belts must be tested as follows:
Remove the protective rubber cap on the end of the tube and measure distance "X".

Distance X: 170 ± 5 mm

If distance "X" is less than the specified length, the belt tensioner has been triggered and must be renewed.

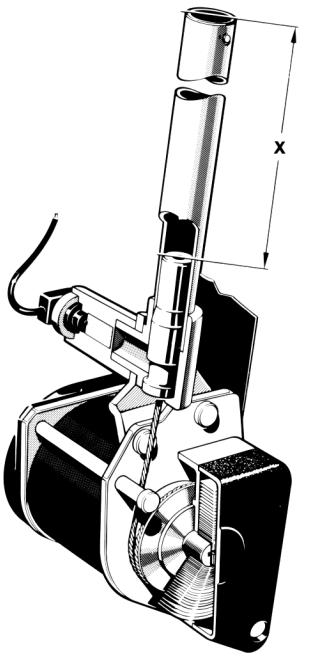

1914-12202/1

As of 01/86, there is an observation window in the housing of the belt tensioner, through which the cable is visible.
Belt tensioners where **no** cable is visible have been triggered and must be renewed.

As of 08/87, belt tensioners are supplied by two manufacturers.

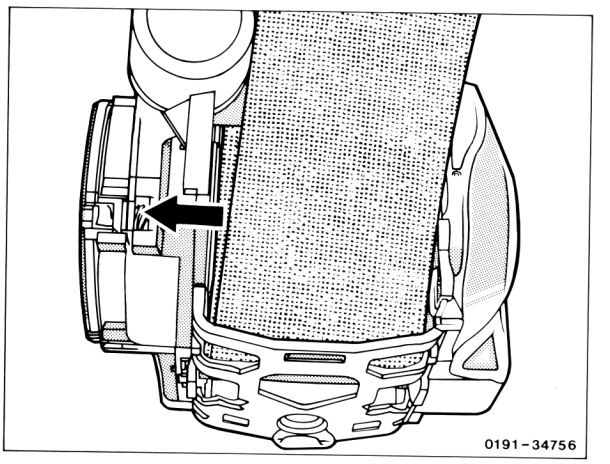
0191-34756

The housing of the Autoflug belt tensioner is also fitted with an observation window through which 2 cables are visible.
Autoflug belt tensioners where only 1 cable or no cable is visible, have been triggered and must be renewed.
The Autoflug belt tensioners are factory-fitted with a tube which is approx. 80 mm shorter than that of the Repa belt tensioners.
Repa belt tensioners also feature these shorter tubes as of 01/88.

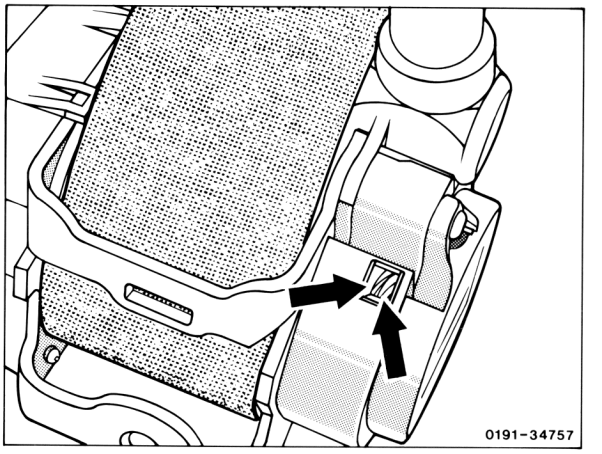

E. Control unit

The control unit, also referred to as the triggering unit or crash sensor, is responsible for determining the severity of a collision and, if necessary, triggering the restraint system at the correct time.

General

(Vehicles up to 09/87)
Two integrated circuits are accommodated together with an acceleration sensor in a common housing.

The housing and the electrical connections have been designed in such a way as to virtually exclude any malfunctions due to electrical interference in the vehicle electrical system caused by the switching of various electrical consumer components on and off, and by electromagnetic interference on public highways.

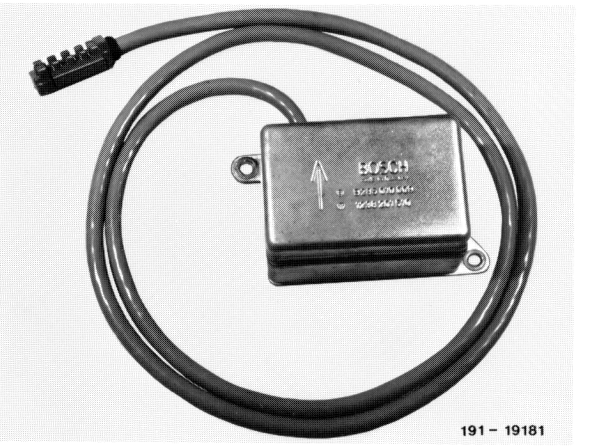

Function

The electronic control unit processes the deceleration of the vehicle during a frontal collision and must therefore be rigidly coupled with the vehicle.

Incorrect triggerings are avoided by means of an integral mercury switch which interrupts the ignition circuits of the airbag and belt tensioner restraint system during normal driving, and by a predetermined deceleration threshold a_S.

The acceleration sensor (1) in the control unit records the deceleration or acceleration acting on the vehicle on the longitudinal direction, and generates a signal. This signal is sent via the high-pass filter (2) to the amplifier (3) which adapts the signal strength to the following processing stages. The acceleration signal is restricted in the limiter (4) and is reduced by a constant acceleration threshold a_S in a subtractor circuit (5). The integrator (6) then integrates the signal produced and passes it on to the trigger switch (7) for evaluation. If the fixed triggering speed V is exceeded, the output stages (20) are activated. This effects triggering of the driver's airbag and the belt tensioners by means of the detonators (19) when the test cycle is complete. An additional precaution against incorrect triggering is a mercury switch (18) installed in the control unit. The control unit also contains a further circuit to monitor the ignition circuits and to perform its own function check. Malfunctions are indicated by the warning lamp (21).

1 Acceleration sensor
2 High-pass filter
3 Amplifier
4 Limiter
5 Subtractor circuit
6 Integrator
7 Trigger switch
8 Voltage monitoring
9 Switch-on delay
10 Logic circuit
11 Ignition circuit monitoring
12 Fault memory
13 Voltage transformer
14 Reserve power source
15 Reserve power source monitoring
16 Sequence control system
17 Output stage monitoring
18 Mercury switch
19 Detonators for airbag and belt tensioner generators
20 Output stages
21 Warning lamp
22 Test switch

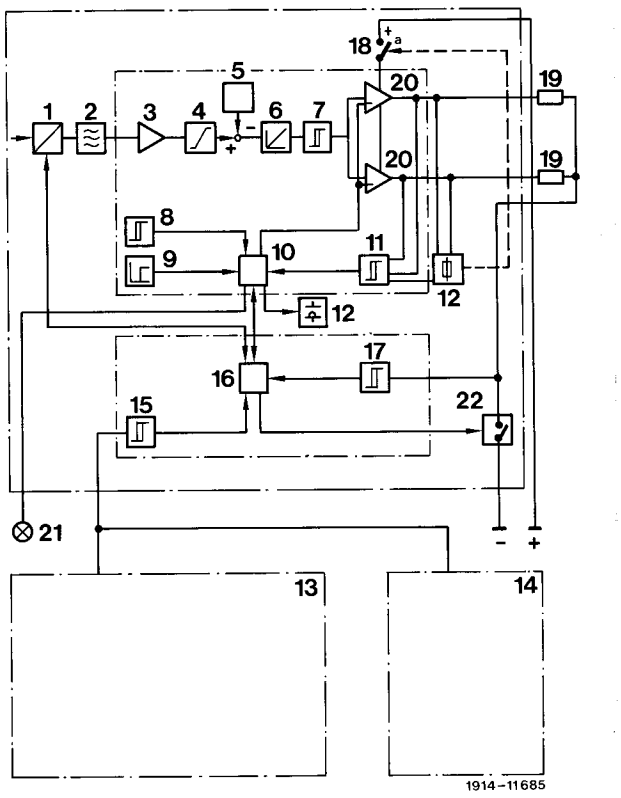

Airbag control unit (1st generation up to 09/87 revised for service)

Due to further technical developments (derived from the 3rd generation airbag with integral reserve power source and voltage transformer), and improved environmental compatibility (free from mercury), the airbag control unit (1/3) has been launched and adapted to the present level of technology.

⚠

The RS or SRS warning lamp (A1e15) must go out after approx. 4 s. Test steps 2, 6 and 7 of the test using the airbag tester, part no. 126 589 10 21 00, are no longer required.

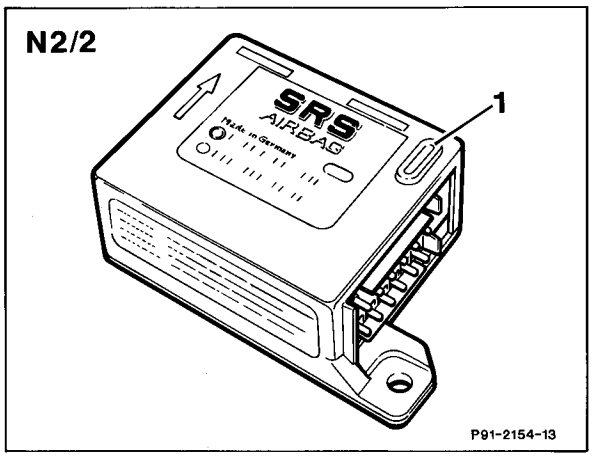

N2/2 Airbag control unit
Part number 004 820 11 10
1 Web

When installing a modified airbag control unit, the voltage transformer (N24) and the reserve power source (C1) must be removed and the cable ends must be insulated with black insulating tape and fastened to the existing cable harness. The airbag control unit (1/3) has the part number 004 820 11 10 and, in conjunction with the cable (A), part number 124 540 57 35, replaces the previous control unit, part number 124 820 51 10; and, in conjunction with the cable (B), part number 124 540 58 35, replaces the control unit, part number 002 820 97 10.
A notice on airbag 1/3 and on the modified test procedure is stamped on the top section of the test coupling for the airbag 10-pin plug connection (X29/9).

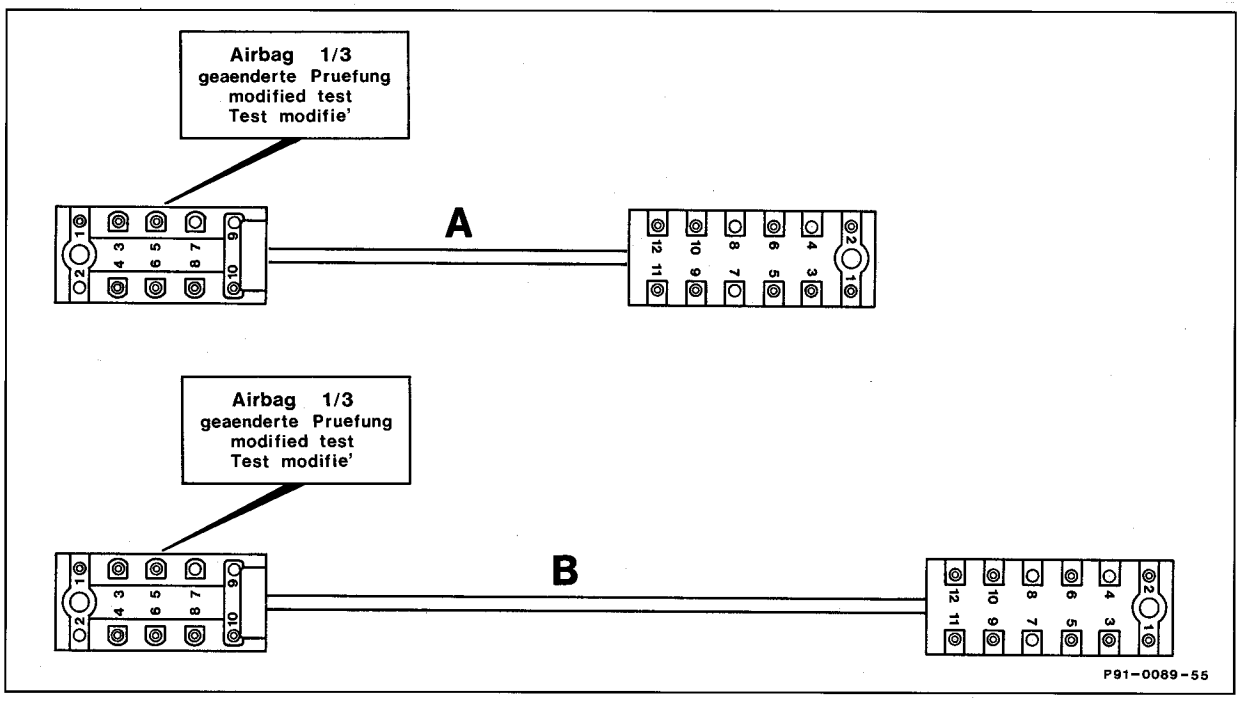

A Cable, part number 124 540 57 35
B Cable, part number 124 540 58 35

Note
The control units, part number 124 820 51 10 and part number 002 820 97 10, are no longer supplied as spare parts. The voltage transformer and reserve power source are still available.

General

(Vehicles as of 09/87 or as of 01/88)
As of 09/87, the airbag restraint system has a new control unit with integral reserve power source and voltage transformer. This means that the reserve power source and voltage transformer previously accommodated in separate housings are no longer required.

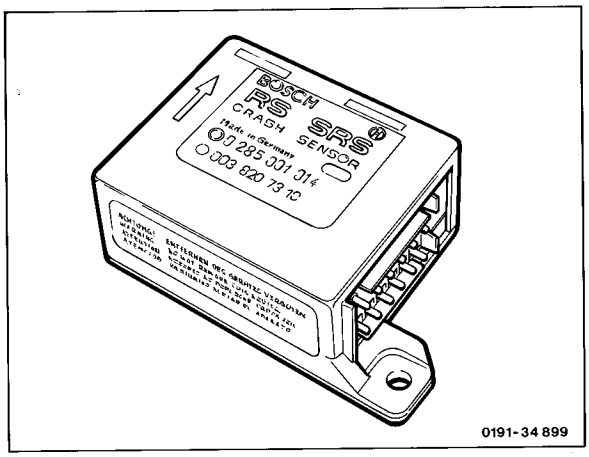

Control unit, driver's airbag, 12-pin

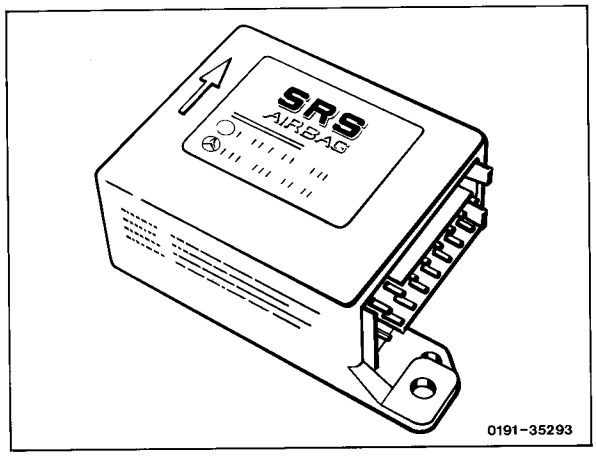

Control unit, driver's and passenger's airbags, 16-pin

Function
The control unit processes the vehicle deceleration during a frontal collision and is rigidly coupled on a support bracket with the transmission tunnel of the vehicle (as before). By means of an integral safety switch which interrupts the ignition circuits for the driver's airbag and belt tensioner restraint system during

normal driving, the airbag and belt tensioners can only be triggered by an actual acceleration. This prevents any malfunctions.
An acceleration sensor installed in the control unit detects the deceleration acting on the vehicle in the longitudinal direction and sends an appropriately conditioned signal to the trigger switches for evaluation. If the fixed triggering thresholds of both trigger switches are exceeded, the output stages are activated as is appropriate for the circumstances detected via the belt buckle switch (buckle latch in/not in belt buckle). This results in triggering of the system (see table). If the power supply is interrupted during a collision, the driver's airbag and/or passenger's airbag can still be triggered within 100 ms, but not the two belt tensioners. The warning lamp lights up if the vehicle voltage is <9.5 V for longer than 10 s. The lamp goes out at a voltage >10 V.
The housing and the electrical connections have been designed in such a way as to virtually exclude malfunctions due to electrical interference in the vehicle electrical system caused by the switching of electric consumer units on and off, and by electromagnetic radiation on public highways.
In order to detect whether the buckle latches are inserted in the belt buckles or not, new belt buckles with separate switches and resistors were necessary. This results in the triggering logic listed below.

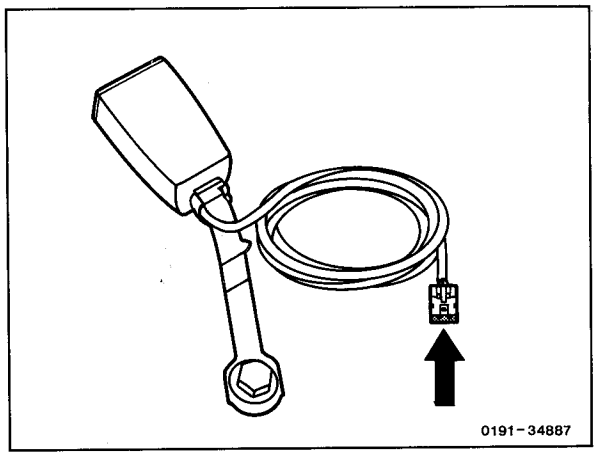

Belt buckle, all models except coupé

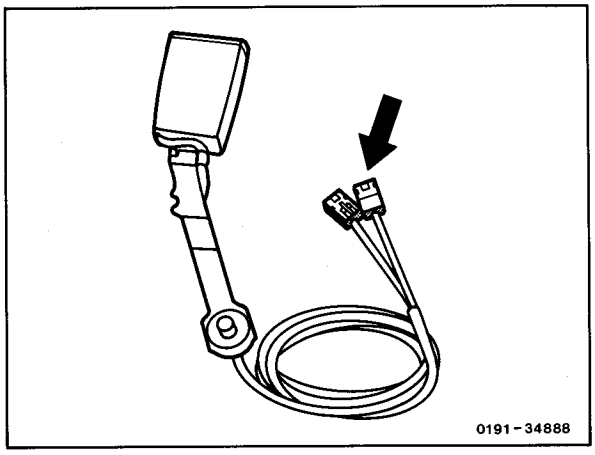

Belt buckle, coupé

Triggering logic of driver's airbag and belt tensioners

Control unit		Driver's seat Buckle latch		Passenger's seat Buckle latch	
		Not inserted	Inserted	**Not** inserted	Inserted
1st triggering threshold exceeded	Belt tensioner	**Not** triggered	Triggered	**Not** triggered	Triggered
	Driver's airbag	Triggered	**Not** triggered		
2nd triggering threshold exceeded	Driver's airbag	Already triggered	Triggered		

91.0201-600/25

Explanation
In the event of a minor collision where the protection offered by the safety belt is sufficient, the belt tensioner only is triggered when the 1st triggering threshold is exceeded, as long as the buckle latch is inserted in the belt buckle.
In the event of a severe collision exceeding the 2nd triggering threshold, the airbag is triggered as well.

Triggering logic of driver's and passenger's airbags and belt tensioners

Control unit		**Driver's seat** Buckle latch		**Passenger's seat**		
				Resistor for passenger's airbag	Buckle latch	
		Not inserted	Inserted		**Not** inserted	Inserted
1st triggering threshold exceeded	Belt tensioners	**Not** triggered	Triggered	Simulates a constantly occupied passenger's seat	**Not** triggered	Triggered
	Driver's/ passen-ger's airbag	Triggered	**Not** triggered		Triggered	**Not** triggered
2nd triggering threshold exceeded	Driver's/ passen-gers's airbag	Already triggered	Triggered		Already triggered	Triggered

Explanation
In the event of a minor collision where the protection offered by the safety belts is sufficient, only the belt tensioners are activated when the 1st triggering threshold is exceeded, as long as the buckle latch is inserted in the belt buckle.
If the buckle latches are not inserted in the belt buckles, or if the 2nd triggering threshold is exceeded, the driver's airbag and/or passenger's airbag is activated in place of or in addition to the belt tensioners.

Block diagram of the entire function of the driver's and passenger's airbags/belt tensioners

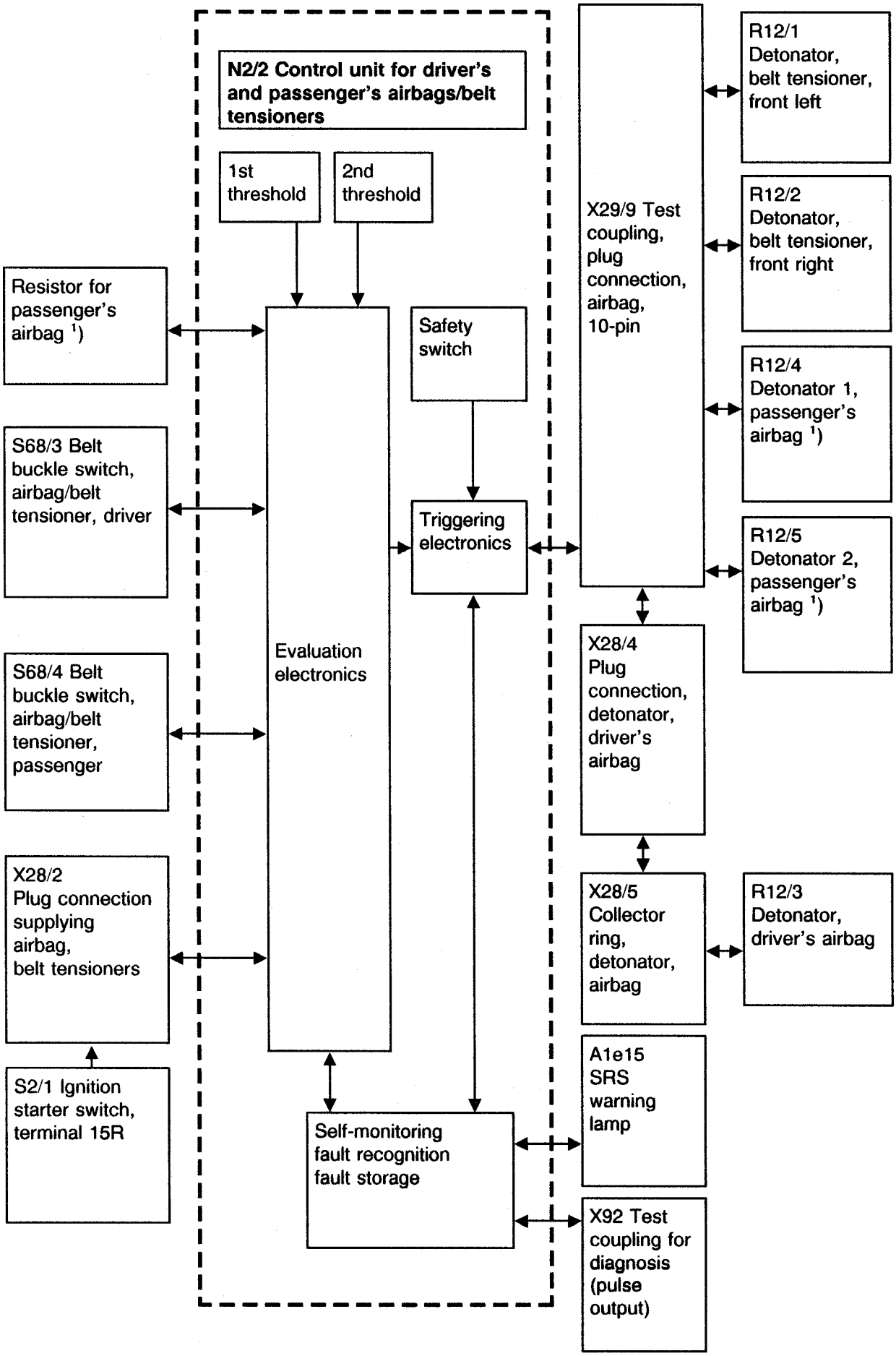

1) Only when passenger's airbag is installed

F. Reserve power source (up to 09/87)

Design

The reserve power source is located in a separate housing connected with the control unit by means of a cable harness.

Method of operation

Should the vehicle battery fail immediately in the event of a collision, the control unit and the ignition circuits are supplied from a reserve power source.

Failures of the reserve power source are indicated by the warning lamp in the instrument cluster.

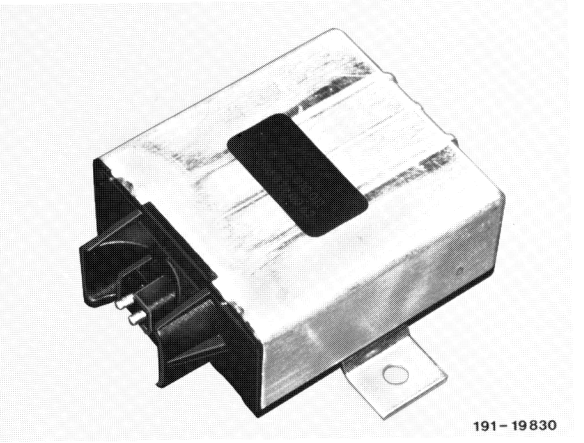

G. Warning lamp

The warning lamp is located in the instrument cluster and is marked "RS" for Restraint System (or "SRS" for Supplemental Restraint System).

The warning lamp indicates the readiness of the airbag and belt tensioner restraint system.
It must light up when the key is moved from position "1" and go out again after approx. 10 s in vehicles up to 09/87, or after approx. 4 s in vehicles as of 09/87.

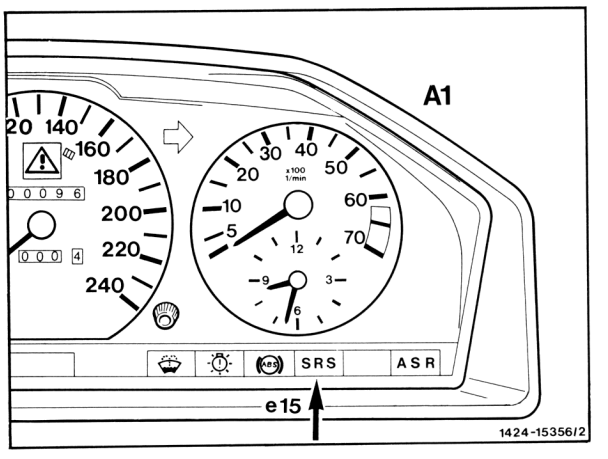

If it fails to light, or if it fails to go out after the period specified, there is a fault in the system. The time of the fault is registered by the control unit and can be called up at a later date.

⚠

Should the above fault display appear, the entire system must be examined as soon as possible by specialist personnel using a tester or, in vehicles as of 09/87, by means of pulse output. This does no impair the function of the driver's and passenger's seat belts installed as standard equipment.

H. Voltage transformer (up to 09/87)

Design

The voltage transformer is located in a separate housing and is connected with the airbag cable harness by means of a plug connection.

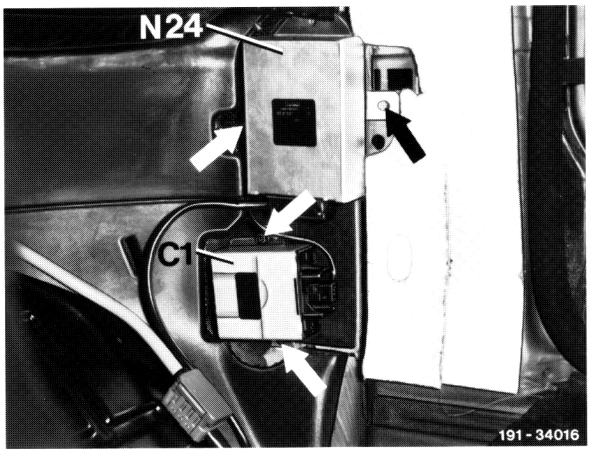

N24 Voltage transformer

Method of operation

The function of the voltage transformer is to supply the control unit and reserve power source with a constant voltage of 12 ± 1 volts even in the event of low battery voltage (≥ 4.0 volts).

I. Energy-absorbing panels under dashboard (USA only)

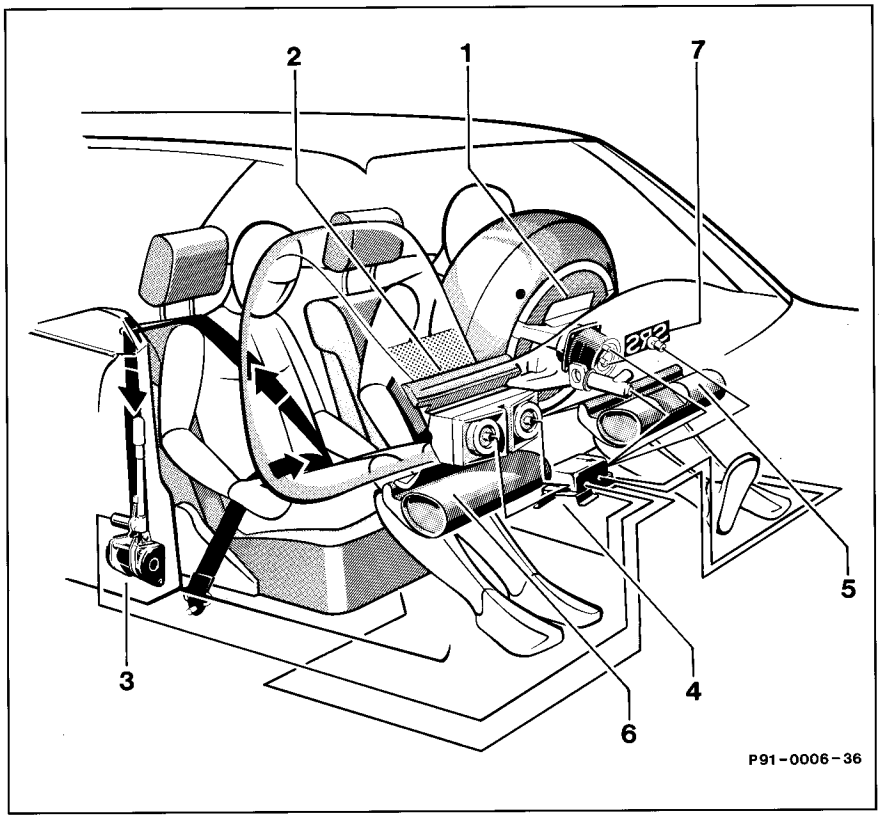

The energy-absorbing panels (5 and 6) are located on the driver's side (and on the passenger's side if a passenger's airbag is fitted) under the dashboard. They consist of energy-absorbing foam with an integral corrugated steel tube as an additional deformation element.

In conjunction with the driver's and passenger's airbags and the belt tensioners, these panels serve to further increase safety in the event of moderately severe to severe collisions.

A. General

All the legal regulations cited in this chapter refer to the Federal Republic of Germany.
In all other countries, the pertinent regulations must be observed.

The driver's and passenger's airbag units and belt tensioners are category T1 pyrotechnic devices. There handling, transportation and storage are subject to the "Law on Explosive Substances" (Explosives Law of 17.04.86) and must therefore be reported to the relevent trade supervisory office.

Acquisition, transportation, storage, removal, installation and scrapping may be performed by trained personnel only, in accordance with the safety regulations.

B. Despatch of airbag and belt tensioner units

Transportation within the plant must always occur in the luggage compartment or cargo area of the vehicle and using the service packaging.

Transportation in the passenger compartment is prohibited!

C. Storage of airbag and belt tensioner units

Airbag and belt tensioner units must be stored in accordance with the Second Regulation to the Explosives Law of 17.04.86.

According to this regulation, small quantities of materials and objects may be stored in lockable rooms without a special storage permit according to the Explosives Law. Only a limited number of category T1 pyrotechnic devices may be stored in a building used for industrial purposes.

According to Annex 6 to the Appendix of the 2nd Explosives Regulation, the following maximum storage quantities are permitted in a building used for industrial purposes without a special permit from the relevant authority, provided certain conditions are observed (e.g. a steel cabinet):

General store room: 20 kg gross

Sealed room (separate store room):
200 kg gross

In order to calculate the quantity actually stored, reference must be made to the gross mass of the component for which the authorization regarding explosive substances was issued:

Per driver's airbag: 0.6 kg
Per passenger's airbag: 1.2 kg
Per belt tensioner: 0.2 kg

D. Assembly and disassembly of airbag and belt tensioner units

1 Testing, disassembly and assembly may only be performed and supervised by specially trained personnel.

2 Airbag and belt tensioner units must only be fitted when the battery is disconnected, the negative pole/terminal covered and the test coupling/plug connection (10-pin) disconnected, directly and without delay after removal from the store room.

3 If work should be interrupted, the airbag and/or belt tensioner units must be returned to storage in a sealed room. Under no circumstances should these components be left unsupervised.

The fundamental points to be observed are as follows:

- Airbag and belt tensioner units must not be treated with grease, cleaning agents or similar agents.

- Airbag and belt tensioner units must not be exposed to temperatures above 100 °C even for brief periods.

- Airbag and belt tensioner units which have fallen from a height of more than 0.5 m must not be installed in the vehicle.

- Airbag and belt tensioner units must only be tested electrically when installed in the vehicle and using the specified test equipment.

Before removing airbag and belt tensioner units, the battery must similarly be disconnected, the negative terminal covered and the test coupling/plug connection (10-pin) disconnected.

⚠

Airbag units removed from the vehicle must always be stored with the cushion uppermost!

If the gas generators are ignited, the airbag unit will be thrown into the air if the airbag is at the bottom (risk of injury).

R 12/3

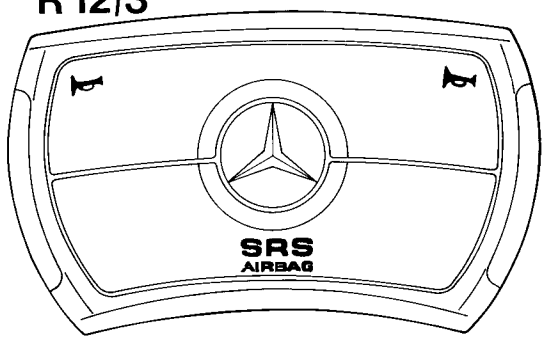

1914-15826

E. Scrapping of airbag and belt tensioner units

In the Federal Republic of Germany, the airbag and belt tensioner units must be rendered unusable by electrical ignition before scrapping, in accordance with the accident prevention regulations. These safety measures are essential because any improper activation of these pyrotechnic devices may result in injury. Dangerous situations arise e.g. when scrapping with the aid of cutting torches, when melting down or if components still charged are placed in flames or smoldering fires at refuse dumps.

In order to avoid an additional workload arising from compliance with these safety measures, we recommend passing the pyrotechnic devices for scrapping to a scrap dealer who will perform the necessary safety measures. On acceptance, the scrap dealer must sign a declaration obliging him to scrap pyrotechnic devices in accordance with the accident prevention regulations.

When agreements of this sort are made, it is however essential to ensure that it is impossible to remove pyrotechnic devices from the scrap to be passed on for repair work. For this reason, they must be rendered unusable for reconditioning by means of ignition. This requires an ignition device developed by MB, with which the pyrotechnic devices can be rendered unusable in complete safety.

Check whether the vehicle is equipped with belt tensioners or airbag and belt tensioner units

1 Belt tensioners can be recognized by the symbol **"RS"** on the buckle latch.

2 The driver airbag unit can be recognized by the inscription **"Airbag"** or **"SRS Airbag"** on the steering wheel upholstery.
The passenger airbag unit can be recognized by the inscription **"SRS AIRBAG"**.

An additional feature to aid recognition is the warning lamp in the instrument cluster bearing the inscription "RS" or "SRS".

(USA) version **"SRS"** (as before).

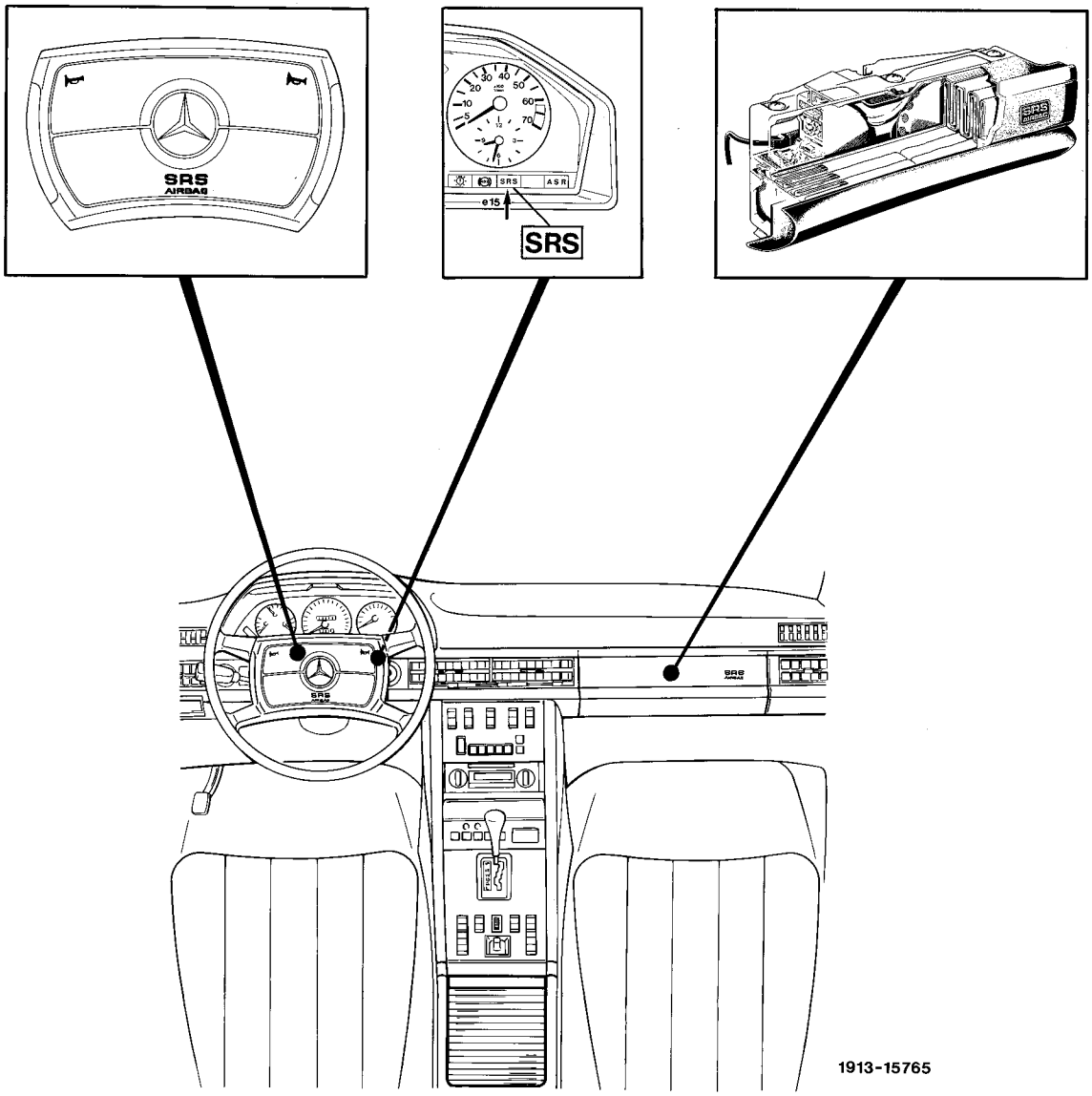

91.0201 - 610/7

Checking removed or individually supplied belt tensioners and airbag units and triggering if necessary

1 Belt tensioner (cable tensioner)
Remove protective rubber cap on end of tube and determine distance "X". To do this, insert a round instrument or a screwdriver of approx. 10 mm diameter and measure the depth.

Model	Distance "X"
124	170 mm ± 5 mm

- If the distance measured is shorter than the distance listed in the table, the belt tensioner has been triggered.

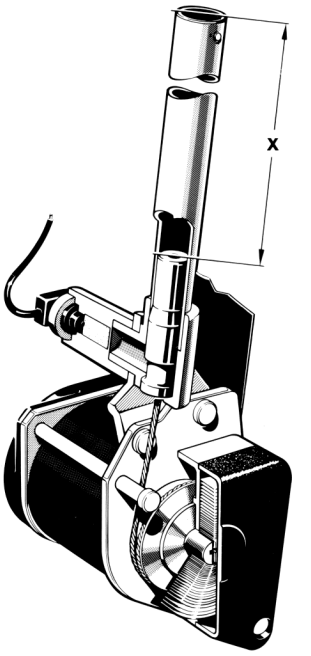

1914-12202/1

Belt tensioner, 1st version

Modified versions
As of 01/86, there is an observation window (arrow) in the housing of the belt tensioner, through which the cable is visible. It is thus no longer necessary to remove the belt tensioner from the vehicle to perform this test.

If no cable is visible, the belt tensioner has been triggered.

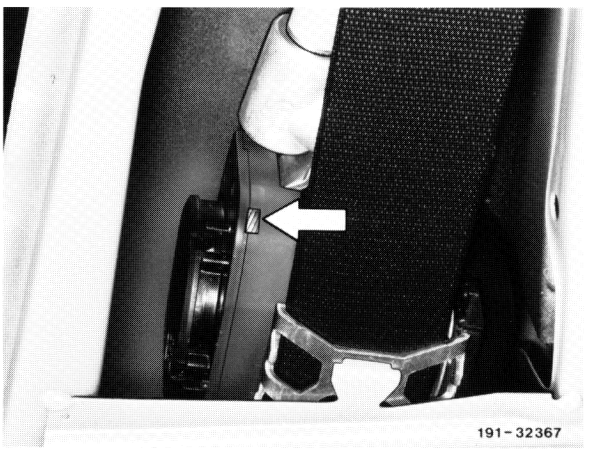
191-32367

Belt tensioner, 2nd version

As of 08/87, belt tensioners are supplied by two manufacturers.

The housing of Autoflug belt tensioners is also fitted with an observation window through which two cables are visible.

Autoflug belt tensioners where only 1 cable or no cable is visible have been triggered.

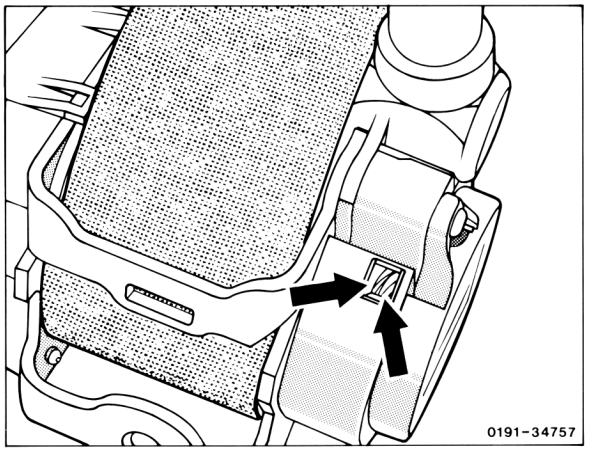

2 Lay any belt tensioners which have not been triggered in the footwell of a scrap vehicle and directly connect the 2-pin coupling. Trigger belt tensioner as described under section b.

3 Airbag unit
If the cushion on the airbag unit is not ruptured, the airbag unit must be triggered with the aid of the 2-pin coupling (see section b).

Triggering device

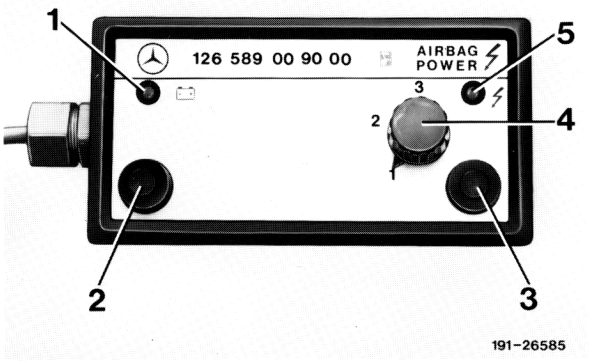

1 Battery charge indicator lamp
2 Battery check pushbutton
3 Pushbutton for triggering
4 Rotary knob
5 Triggering indicator lamp

Triggering airbag and belt tensioner units
In order to trigger belt tensioner units **via the 4-pin coupling,** a separate adapter cable, part no. 124 589 29 63 00, is required. This part is not included with the triggering device, part no. 126 589 00 90 00.

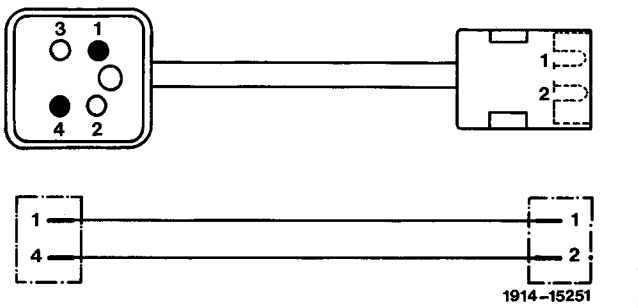

Self-made adapter cable

Number	Designation	Part no.
1	Plug, top section	009 545 21 28
1	Plug, bottom section	009 545 52 28
2	Plug pins, dia. 4 mm	001 545 38 26
2	Plug pins, dia. 2.5 mm	011 545 16 28
1	Plug	012 545 56 28
0.3 m	Mains cable	Commercial

In order to trigger the belt tensioner units (modified triggering logic as of 09/87) by means of the test coupling/plug connection for airbag (X29/9), a separate adapter cable, part no. 126 589 21 63 00, is required. This part is not included with the triggering device, part no. 126 589 00 90 00.

The adapter cable must be connected to plug connector 6 of the triggering device and may be used for all vehicles delivered to date.

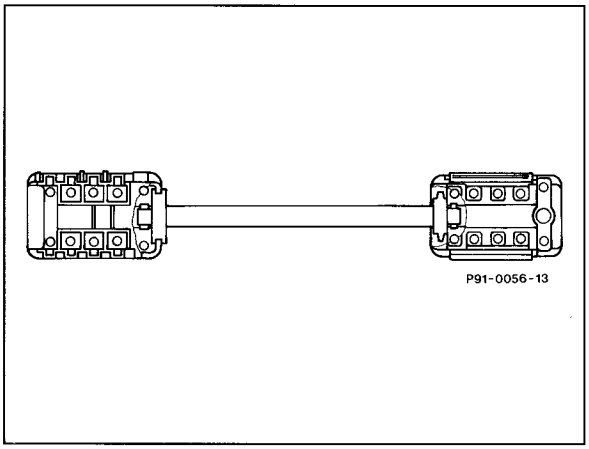

a) Use of the triggering device

With airbag and belt tensioner units in situ.

1 Check that the steering wheel is securely mounted on the steering column and that the airbag unit is rigidly coupled to the steering wheel (the steering wheel is damaged when an airbag unit is triggered and must also be scrapped). In vehicles with passenger's airbag, the passenger airbag unit must be secured in place with the central retaining bolt.

2 Turn ignition key to position "0", disconnect battery negative terminal and cover.

3 In vehicles with airbag and belt tensioners, disconnect red 10-pin plug connection.

Location of the 10-pin plug connection or the 4-pin belt tensioner test coupling in the vehicle:

Model 124, 1st version

Under the passenger's foot rest.

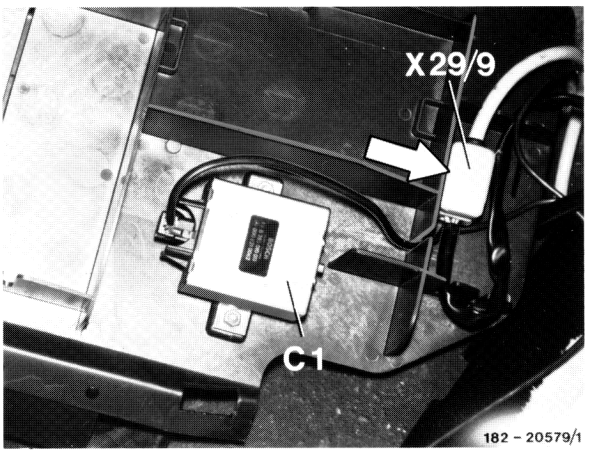

Model 124, 2nd version

On the panel under the passenger's foot rest.

4 Connect adapter cable part no. 126 589 21 63 00, with plug connection 6. Connect adapter cable plug connector with the 10-pin plug of the airbag cable harness.

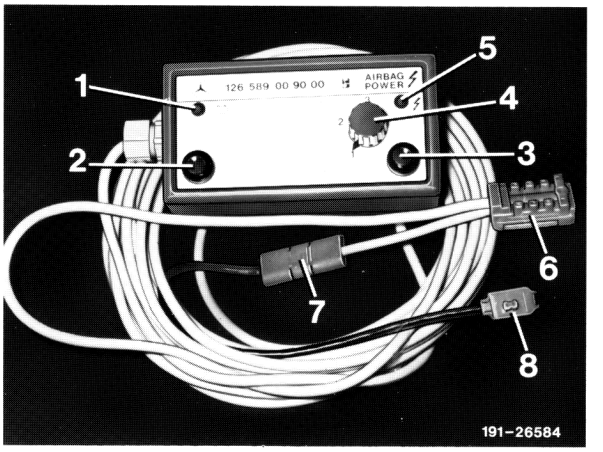

Triggering

Driver's airbag	Knob (4), position1
Belt tensioner, Passenger's airbag	
Detonator 1	Knob (4), position 2
Passenger's airbag Detonator 2	Knob (4), position 3

5 From the specified safety distance (10 m, equals the length of the triggering cable) press pushbutton (2) and pushbutton (3) simultaneously. The indicator lamp (5) lights up when the belt tensioner has been triggered.

6 In vehicles with belt tensioners only (without airbag), disconnect adapter cable at plug connector (7) and join adapter cable, part no. 124 589 29 63 00, or self-made adapter cable, with plug connector (7).

7 Join 4-pin plug (2 pins used) to the belt tensioner test coupling.

Triggering the belt tensioner
Knob (4), position 2.

b) Use of the triggering device

For separate airbag and belt tensioner units
Separate airbag or belt tensioner units should be triggered in a scrap vehicle (with the doors closed) if possible. Position the separate airbag unit in the footwell with the **cushioned side is uppermost.** If there is no suitable vehicle available, the airbag unit may, in exceptional cases, be triggered in the transportation container for spare-part engines with the lid closed.

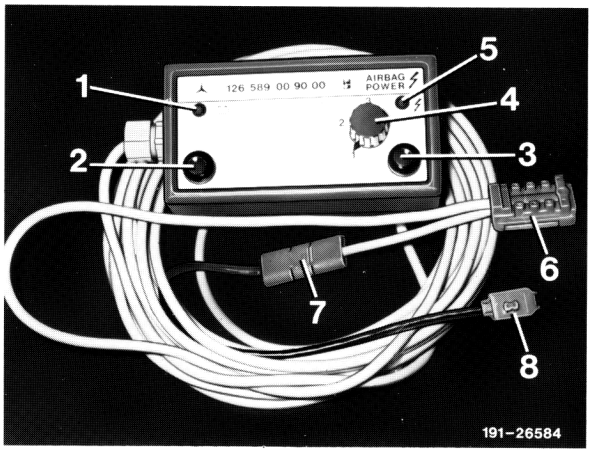

Since the passenger airbag unit has 2 gas generators, these units must be triggered in 2 stages. Separate belt tensioner units must be triggered in a container filled with sand. There must be a bank of sand at least 30 cm thick around the unit.

1 Connect plug connector (8) to the unit to be scrapped.

2 Turn rotary knob (4) to position (1).

3 From the specified safety distance (10 m, equals the length of the triggering cable), press pushbutton (2) and pushbutton (3) simultaneously. When triggering in a scrap vehicle, always stand in front of the vehicle. The indicator lamp (5) lights up when the unit has been triggered.

Note
Plug connector (8) is damaged when a separate airbag unit is triggered. For this reason, the adapter cable must be disconnected at the plug connector (7) and renewed.
(Part no. 126 589 00 90 22)

c) If triggering device, part no. 124 589 00 90 00, is not available

Self-made triggering cable

1 Construct triggering cable with pushbutton.

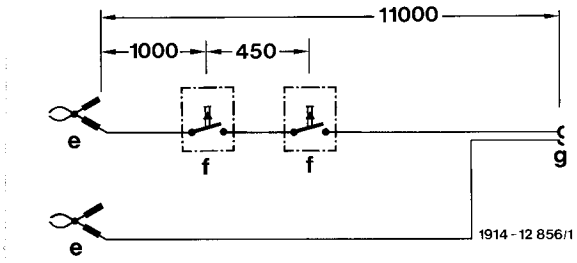

e Battery terminals
f Pushbutton
g Coaxial plug connector

2 Construct adapter cable for 4 or 10-pin coupling of vehicle cable harness.

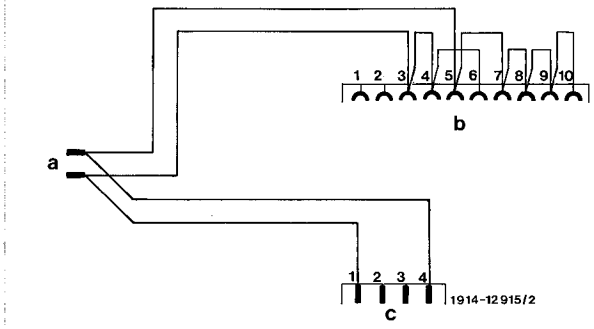

e Coaxial plug connector
b 10-pin plug connector
c 4-pin plug connector

3 Construct adapter cable for triggering separate airbag or belt tensioner units.

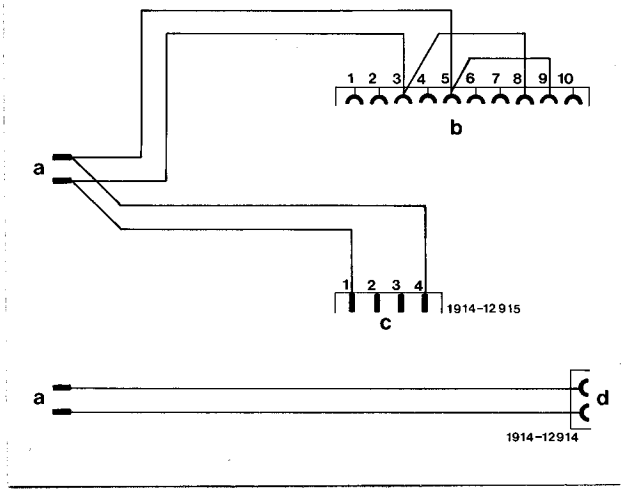

a Coaxial plug connector
d 2-pin plug connector

Note

The plug connector (d) is damaged when a separate airbag unit is triggered. For this reason, the adapter cable is no longer usable after triggering the airbag unit and must be rebuilt. The passenger airbag unit must be triggered in two stages (2 gas generators).

4 Connect triggering cable to starter battery. From the specified safety distance (equal to the length of the triggering cable), press both pushbuttons simultaneously.

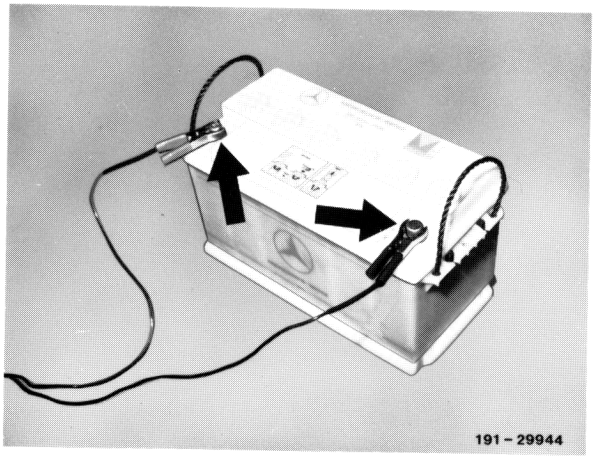

Spare parts

Number	Designation	Part no.
1	10-pin plug connector	001 545 20 28
8	Contact jack	002 545 99 26
1	4-pin plug connector	009 545 52 28
1	Cover	009 545 21 28
2	Pins	001 545 38 26
1	2-pin plug connector	126 540 07 81
2	Coaxial plug	Commercial
2	Pushbutton (without locking device)	Commercial
2	Battery terminals	Commercial
1	Two-strand cable, 11 m long	Commercial

Operating the triggering device

Test config. Triggering device at position	Cable harness plug no.	Scope of test	Operation: buttons	Reference value: LED	Possible cause if deviation from reference value
1		Internal battery test	Press Triggering device not connected	ON Green indicator lamp ON	If necessary, renew batteries of triggering device: 2 miniature batteries (2×1.5 V)

With the ignition switched off and the battery negative terminal disconnected, disconnect the coupling from the control unit and connect with the triggering device.
Observe the safety distance of 10 m when triggering.

1	3 + 5	Triggering driver's detonator	Press both pushbuttons	1. Before triggering ON Triggering occurs with a bang 2. After triggering ON Green indicator lamp ON	Triggering circuit faulty
2	8 + 6 4 + 9 4 + 10	Triggering passenger's detonator 1 or belt tensioner, right, or left and right			
3	7 + 6	Triggering passenger's detonator 2			

F. Disposal of mercury-containing control units

Mercury-containing components must not be disposed of with industrial waste or passed on to the usual scrap disposal companies. These components must either be sent for recycling in accordance with the regulations of the Refuse Law, or disposed of as special waste.

Workshops with no recycling facilities for mercury-containing components may send these parts back to the Sindelfingen plant, Abteilung KGA, Abladestelle 300, in the same way as returned service parts.

Parts covered by warranty and goodwill must be marked as such.

Mercury-containing components

1. Belt tensioner control unit
Part no. 003 820 06 10

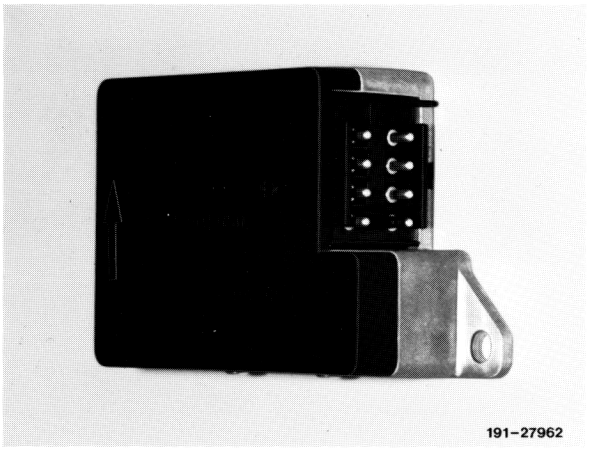

2. Airbag control unit
Part no. 126 820 14 10
124 820 51 10
002 820 97 10

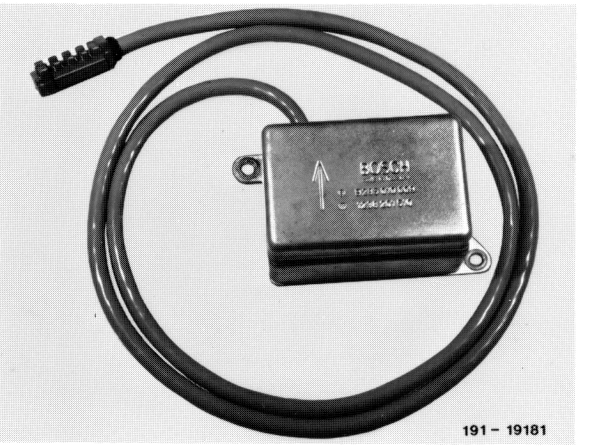

3. Airbag control unit
Part no. 003 820 73 10
003 820 74 10

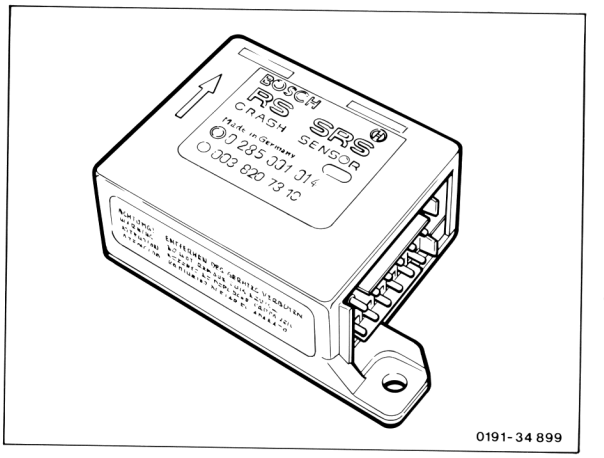

Mercury-free control units

There is a web (1) on the top face of these airbag or belt tensioner control units. When the control unit is installed in the vehicle, this web is accessible from outside (with the ashtray, radio or right-hand tunnel panelling removed) and indicates that the previous mercury switch has been replaced by a reed contact.

Control units with web need no longer be separately disposed of but may remain in the vehicle for scrapping, be disposed of as industrial waste or passed on to the usual scrap disposal companies.

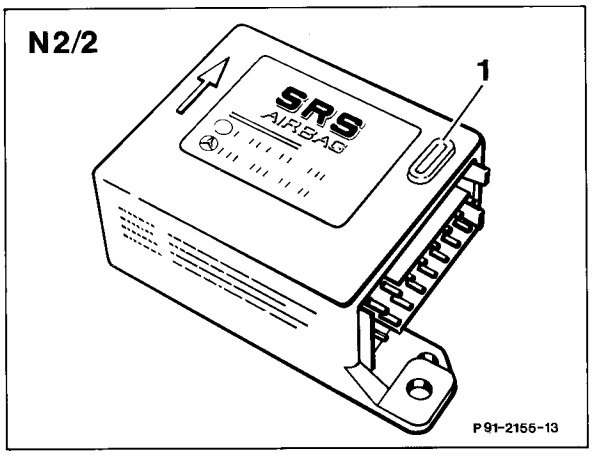

Illustrated on the airbag control unit
N2/2 Control unit
Part no. 004 820 11 10
1 Web

G. Important instructions to be observed during testing and repairs and following accidents

1. **Before starting**
- **body repairs**
- **welding and**
- **work on the airbag restraint system,** steering wheel, airbag unit, control unit and belt tensioner, the battery negative terminal must be disconnected and covered.

The 10-pin test coupling for the airbag plug connection (color red) in the right-hand footwell must be disconnected 2 s after disconnecting the battery.

2. Following accidents

After an accident, the individual components must be renewed if the following conditions are met:

1 Visible deformation or damage to the housing.

2 Deformation to the control unit support bracket (even if the control unit appears to be intact).

3 If an electrical fault is discovered during testing.

4 Not triggered, but damaged airbag and belt tensioner units.

5 Triggered airbag and belt tensioner units.

6 If pulse display 10 appears (vehicles as of 09/87).

Note

Damaged or faulty components must not be repaired, but must always be renewed. The same renewal regulations as described in operation no. 91-625 apply for belt tensioner units which have not been triggered.

If the driver airbag unit has been triggered, the steering wheel must always be renewed.

If the passenger airbag unit has triggered, the installation frame must always be renewed.

3 Paintwork

There are no particular safety regulations to be observed in the event of paintwork with subsequent heat drying, as the entire airbag and belt tensioner restraint system has been designed in such a way that no damage can occur from heating up the vehicle.

4 After working on the airbag and belt tensioner restraint system, the system (in vehicles up to 09/87) must be checked using the tester, or (in vehicles as of 09/87) by means of the pulse display. Pulse display 1 indicates that no fault is stored, i.e. the system is in order.

Note

In vehicles as of 09/87, the belt tensioners are not incorporated into the pulse display and these must be specially tested as described under 91-700 following renewal of one or both belt tensioners.

Note

When removing one or both front seats (the plug connection to the belt buckles must be disconnected) with the ignition in position 1 or 2, the RS or SRS warning lamp lights up and goes out again when the seats have been reinstalled. This is stored as a fault (pulse display 5 or 6).

The memory must be cleared as described.

91-622 Removing and installing control unit for airbag and belt tensioners

Op. No. of Job Texts and Work Units,
Standard Texts and Flat Rates .....

A. Up to 09/87

Special tools

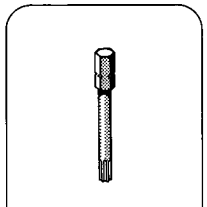

126 589 00 10 00

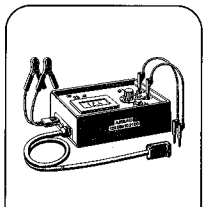

126 589 10 21 00

Conventional tools	Order Number	e.g.
Ratchet (1/4")	Item No. 415	Eduard Wille GmbH
Connector (1/4 ")	Item No. 412	Postfach 12 01 03
		D-5600 Wuppertal 12

1st version

Note
The 2nd version differs in the

- modified routing of the cables for the triggering unit under the heater box to the right as far as the passenger's footwell
- modified location of the red 10-pin plug connection from the foot rest to the plate located under the foot rest.

Removing

1 Turn ignition key to position "0", disconnect battery negative terminal and cover.

2 Remove front foot mats and insulators.

3 Unscrew nuts (arrows) on the foot rest in the passenger's footwell.

4 Disconnect red 10-pin plug connection for the control unit on the foot rest.

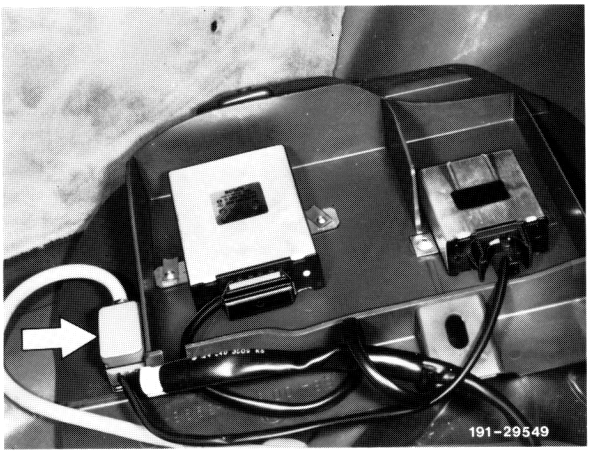

5 Remove front right-hand panel under dashboard.

6 Remove glove box and take out air hose to right-hand side nozzle.

7 Remove side tunnel panelling on left and right (68-205).

8 Unscrew retaining bolts for control unit.

9 Open cable straps in region of firewall.

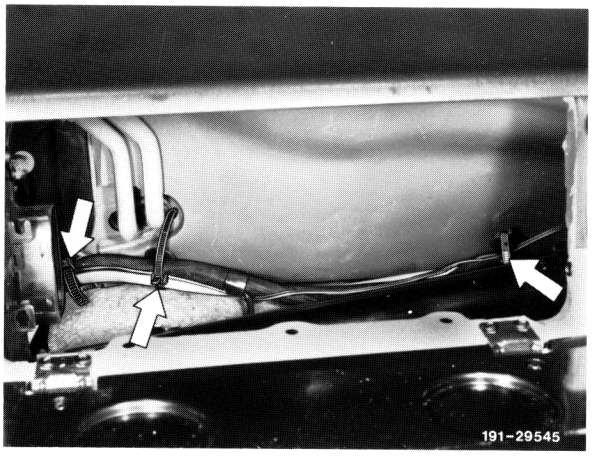

10 Tie string to red 10-pin plug of control unit.

Note
This string makes it easier to pull the new cable through the front wall pillar.

11 Pull out connecting cable from front wall pillar.

12 Remove control unit with connecting cable.

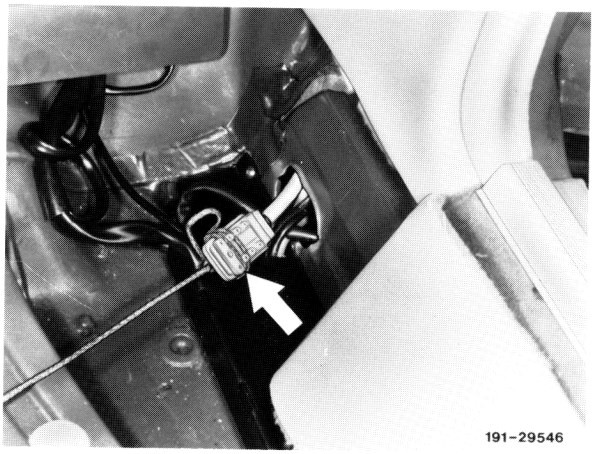

Installing

13 Tighten bolts holding control unit on transmission tunnel (tightening torque 10Nm).

⚠

The arrow on the control unit must point in the direction of travel.

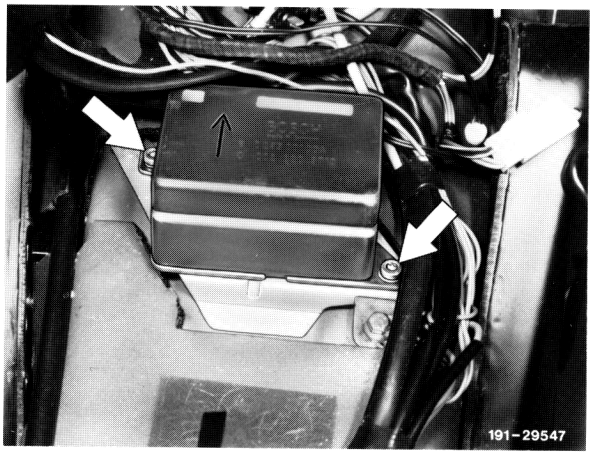

14 Connect red 10-pin plug connection (arrow) with cable harness.

15 Connect battery, turn ignition key to position "1" and test system by means of the RS warning lamp.

16 Turn ignition key to position "0". Disconnect battery negative terminal and cover.

17 Disconnect red 10-pin plug connection (arrow).

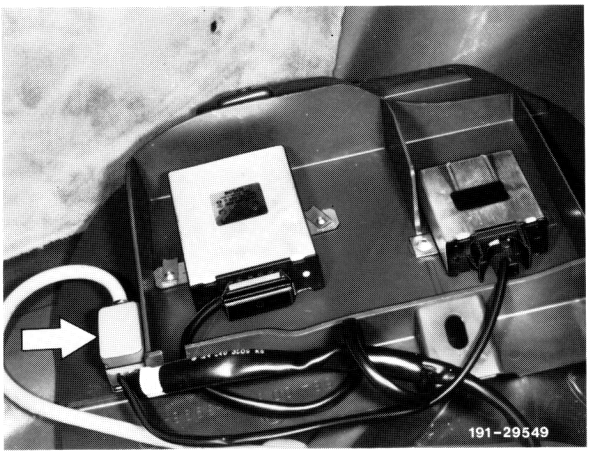

18 Tie string to red 10-pin plug of control unit and route connecting cable through the front wall pillar with the aid of this string.

19 Check system using tester (91-700).

20 Continue installation in the reverse sequence.

21 Check system with the aid of the RS warning lamp.

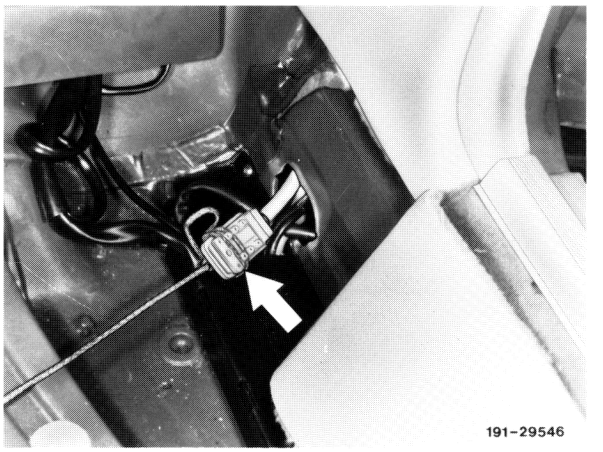

2nd version

Removing

1 Turn ignition key to position "0". Disconnect battery negative terminal and cover.

2 Remove front right-hand foot mats and insulators.

3 Unscrew bolt underneath foot rest and remove foot rest.

4 Disconnect red 10-pin plug connection (X29/9) on plate. Open cable strap.

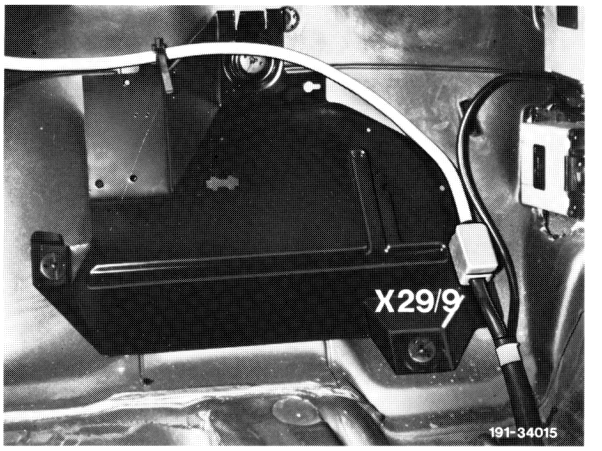

X29/9 Plug connection

5 Remove right-hand side tunnel panelling (68-205).

6 Unscrew retaining bolts for control unit. Remove control unit and pull out connecting cable.

Installing

7 Secure control unit to transmission tunnel with bolts (tightening torque 10 Nm).

⚠

The arrow on the control unit must point in direction of travel.

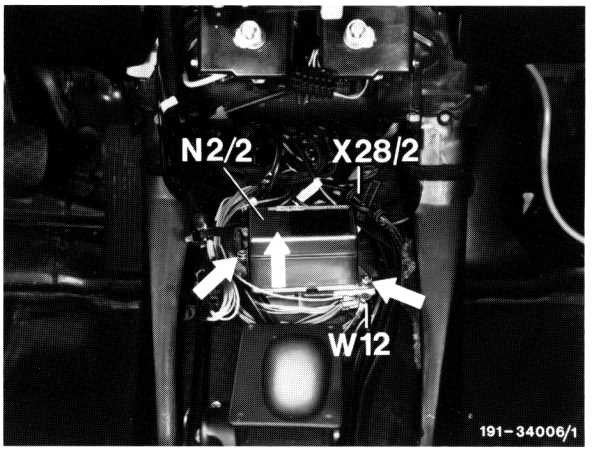

Illustrated with the center console removed
N2/2 Control unit

8 Connect red 10-pin plug connection with the cable harness.

9 Connect battery, turn ignition key to position "1" and test system with the aid of RS warning lamp.

10 Disconnect red 10-pin plug connection.

11 Check system using tester (91-700).

12 Continue installation in the reverse sequence.

13 Check system using the RS warning lamp.

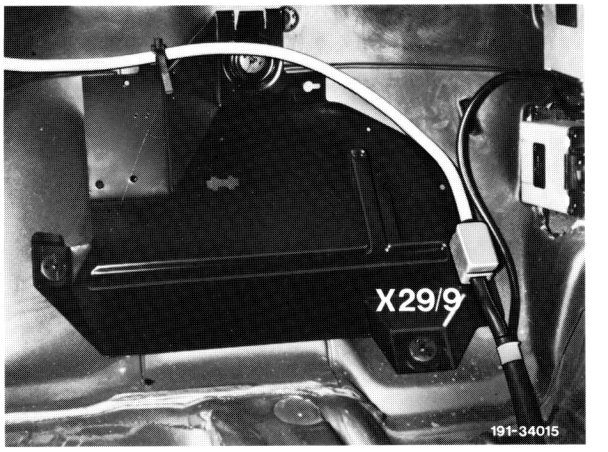

⚠
When installing a modified airbag control unit, the voltage transformer (M24) and reserve power source (C1) must be removed, the cable ends insulated with black insulating tape and fastened to the existing cable harness.

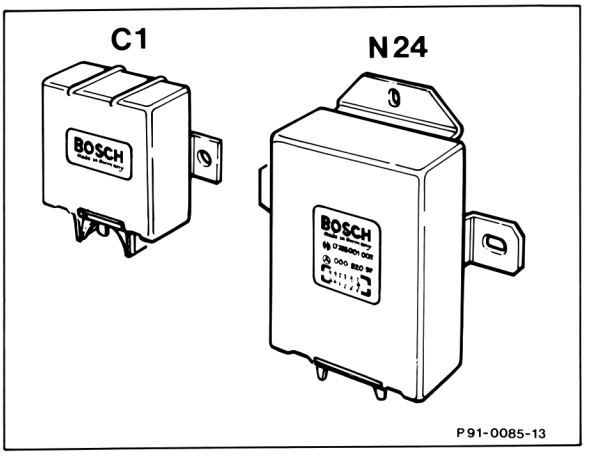

C1 Reserve power source
N24 Voltage transformer

1. Renewing control unit with cable
Refer to repair guide on microfilm for airbag and belt tensioner (91-620).

2. Additional work

- Remove voltage transformer (N24) (not present in all vehicles) and insulate plug connector (3).
- Remove reserve power source (C1) and insulate plug connector (2).
- Fasten cables to existing cable harness using cable straps.
- Test airbag system using airbag tester, part no. 126 589 10 21 00.

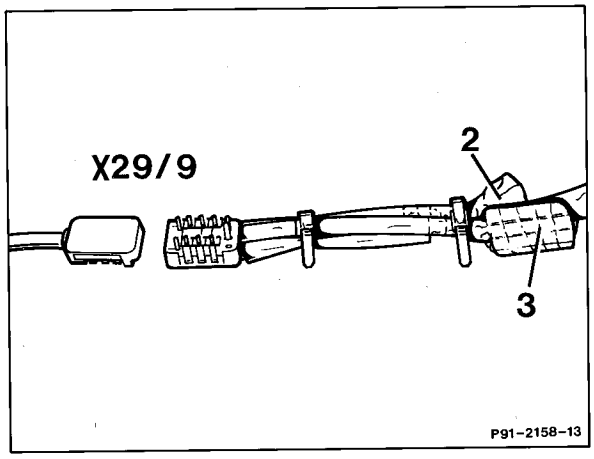

X29/9 Test coupling/plug connection, airbag, 10-pin
2 Plug connector, reserve power source
3 Plug connector, voltage transformer

Note

Revised test

Test steps 2, 6 and 7 are no longer required

- Connect test coupling/plug connection, airbag, 10-pin (X29/9).
- Switch on ignition
  The RS or SRS warning lamp must go out after approx. **4 s**.

B. As of 09/87

Special tools

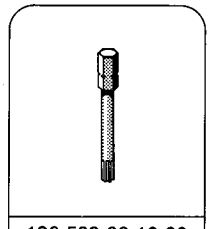

126 589 00 10 00

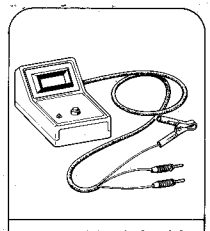

124 589 19 21 00

Conventional tools	Order Number	e.g.
Ratchet (1/4")	Item no. 415	Eduard Wille GmbH
Connecter (1/4")	Item no. 412	Postfach 12 01 03
		D-5600 Wuppertal 12

Testing

After working on the driver's airbag and belt tensioner restraint system, the system must be tested by means of the pulse display.

This test is described at the end of this operation number.

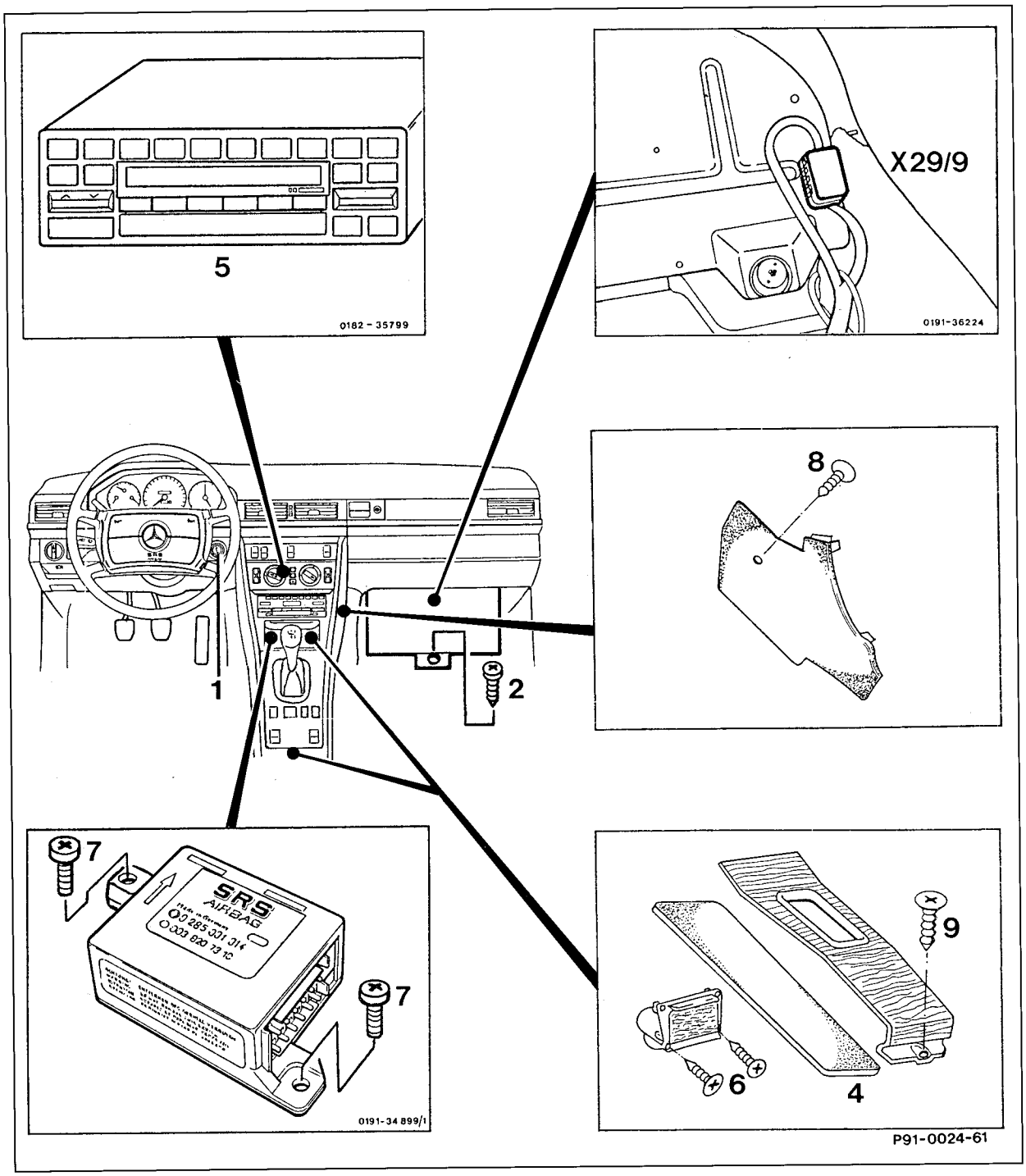

Ignition	Switch off.
Battery negative terminal	Disconnect and cover, connect.
Foot mat in passenger's footwell	Remove, install.
Cross-head screw on foot rest (2)	Unscrew, screw in.

Foot rest	Detach in an upwards direction, install.
Red 10-pin plug connection for airbag (X29/9)	Disconnect, connect.
Carpet (4) in center console	Remove, install.
Cross-head screw (9) on cover for gear shift/selector lever	Unscrew, screw in.
Ashtray	Remove, install.
Cross-head screws (6) on ashtray housing	Unscrew, screw in.
Radio (5)	Remove, install.
Cross-head screw (8) on right-hand side of tunnel panelling	Unscrew, screw in.
Tunnel panelling	Remove forwards and to the right, install.
Plug connection on control unit	Disconnect, connect.
2 torx socket screws (7) on control unit	Unscrew, screw in.
Control unit	Remove, install.

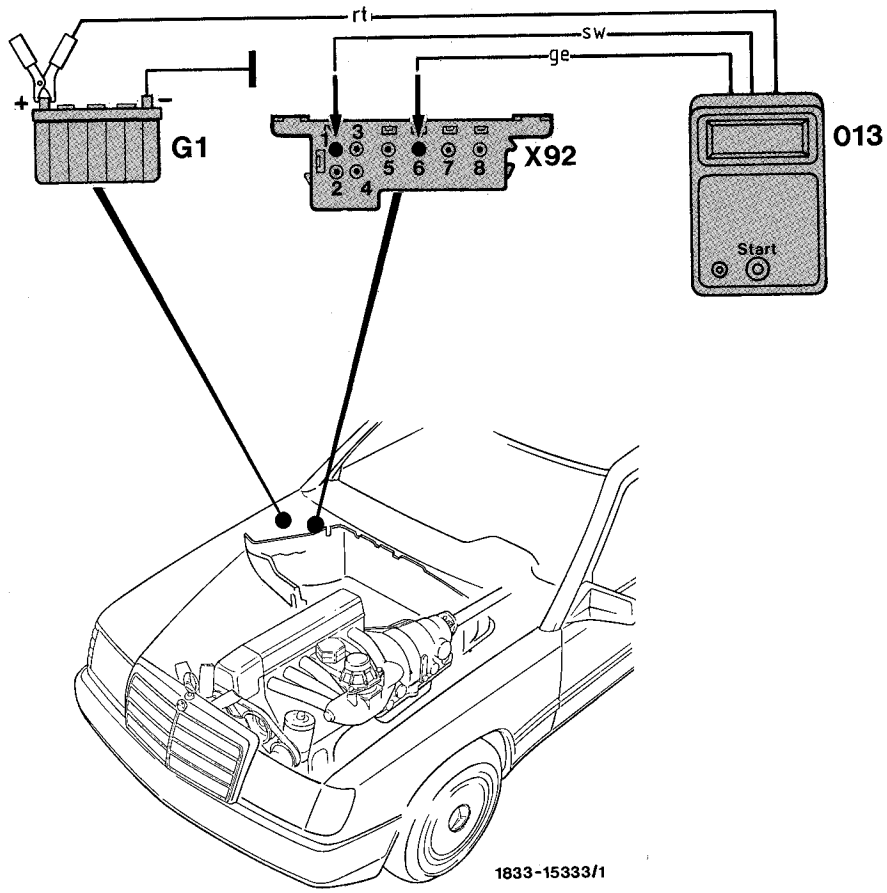

013 Pulse meter
G1 Battery
X92 Test coupling for diagnosis, 8-pin (flashing code)

Testing after renewing the control unit

There is a diagnosis program integrated in the control unit to test the control unit and the electrical components of the airbag system. When a fault is detected, the warning lamp (A1e15) does not go out after 4 s (previously 10 s). The faults detected are stored and may be called up in the form of a pulse display by means of the warning lamp (A1e15) or digitally by means of a pulse meter.

Note on pulse display
The digits 1-10 appear on the display of the pulse meter.

A 1 signifies that no fault is stored in the system. All other numbers are assigned to a certain group of faults. If there are several faults in the system the fault with the lowest pulse number is displayed first.

- If the light-emitting diode "U-Batt" lights up after **connection**, the pulse meter and power supply for the pulse meter are in order.

- When the first number reappears during the **test** after at least two or more pulse outputs (numbers) all faults have been read.

Diagnosis with pulse display
- Connect pulse meter in accordance with the connection diagram.

Note
The light-emitting diode "U-Batt" in the display must light up.

- Switch on ignition.

- Press the start button for between 2 and 4 s.

- Display 1 means no fault in the system.
  If another number appears, rectify the fault in accordance with the fault-finding flow diagram.

A. In the event of mechanical damage

The belt strap may be damaged if the seat belts are improperly treated (incorrectly cleaned, incorrectly stored or crushed). For this reason, it is essential to perform a visual inspection of the belt strap during every service. If the belt strap is seen to have cut fibers or damage (e.g. cigarette burns), the customer must be advised of the necessity to renew the belt. It is not essential to renew the seat belt if it is worn but no fibers are broken.

An appropriate remark must be entered on the repair contract should the customer refuse renewal of a damaged seat belt.

If the customer complains that the seat belt does not roll up correctly, check before removing whether the belt is fed back properly by hand or whether incorrect use has caused it to twist through 180° behind the panelling. To do this, the panelling must be removed.

B. Following accidents

Note
Whether it is necessary to renew a complete seat belt or individual damaged components, such as the guide rail, belt retractor or buckle, depends on the extent of visible deformation.

Visible damage
Stage 1
1 The plastic jacket of the guide rail is depressed. The seat can no longer be properly adjusted.

Remedy: Renew guide rail.

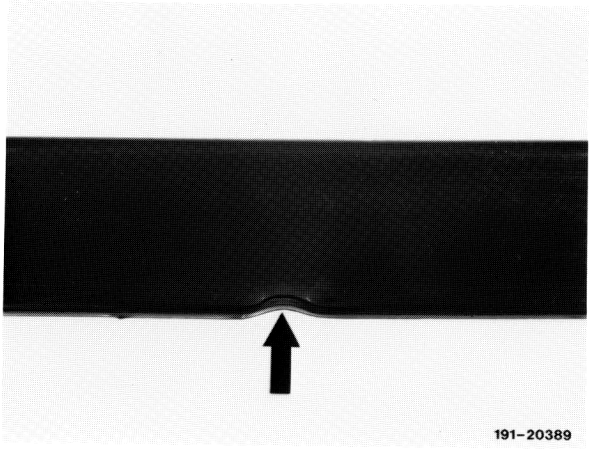

2 The guide rail is deformed. The seat can no longer be properly adjusted.

Remedy: Renew guide rail.

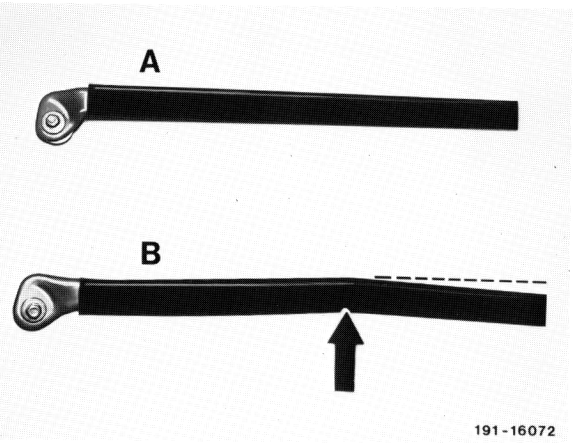

Illustrated for model 123
A Intact guide rail
B Deformed guide rail

Stage 2
1 Guide rail is severely deformed. The seat can no longer be adjusted.

2 The belt retractor fails to operate.

Remedy: Renew guide rail and belt retractor.

91-635 Removing and installing seat belt with belt tensioner

Op. No. of Job Texts and Work Units,
Standard Texts and Flat Rates .....

Special tool (vehicles up to 09/87)

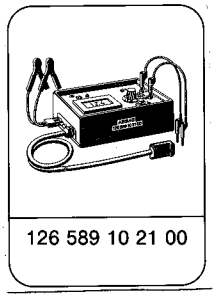

126 589 10 21 00

Special tools (vehicles as of 09/87)

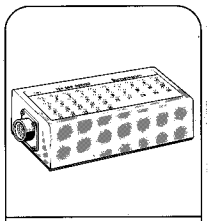

124 589 00 21 00

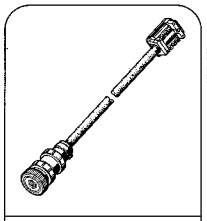

124 589 35 63 00

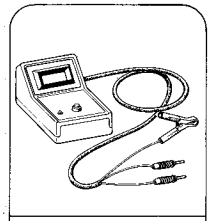

124 589 19 21 00

Note

Noise in the belt retractor when the seat belt is retracted is due to its method of operation. In the event of complaints, unreasonable noise can only be rectified by renewing the seat belt. **Under no circumstances must oil or grease be used to eliminate noise.**

Similarly, the **belt retractor must not be dismantled,** as the pretensioned spring may lead to accidents. Belt retractors which have been opened are no longer covered by warranty.

Conventional tester	e.g.
Multimeter	Sun, DMM-5 or Avometer 2003 Fluke 23

Testing (vehicles up to 09/87)

After working on the airbag/belt tensioner restraint system, the resistance of the belt tensioner detonators must be measured using the airbag tester (test steps 4 + 5) (test program for airbag 91-700). In vehicles with belt tensioner (standard equipment), the resistance of the belt tensioner detonators should be measured in accordance with test program 91-750.

Testing (vehicles as of 09/87)

After working on the airbag/belt tensioner restraint system, the resistance of the belt tensioner detonators must be measured and the system tested by means of the pulse display. The test is described in operation number (91-710). In vehicles with belt tensioner (standard equipment), the resistance of the belt tensioner detonators should be measured in accordance with test program 91-750.

A. Sedan

Op. No. of Job Texts and Work Units,
Standard Texts and Flat Rates .....

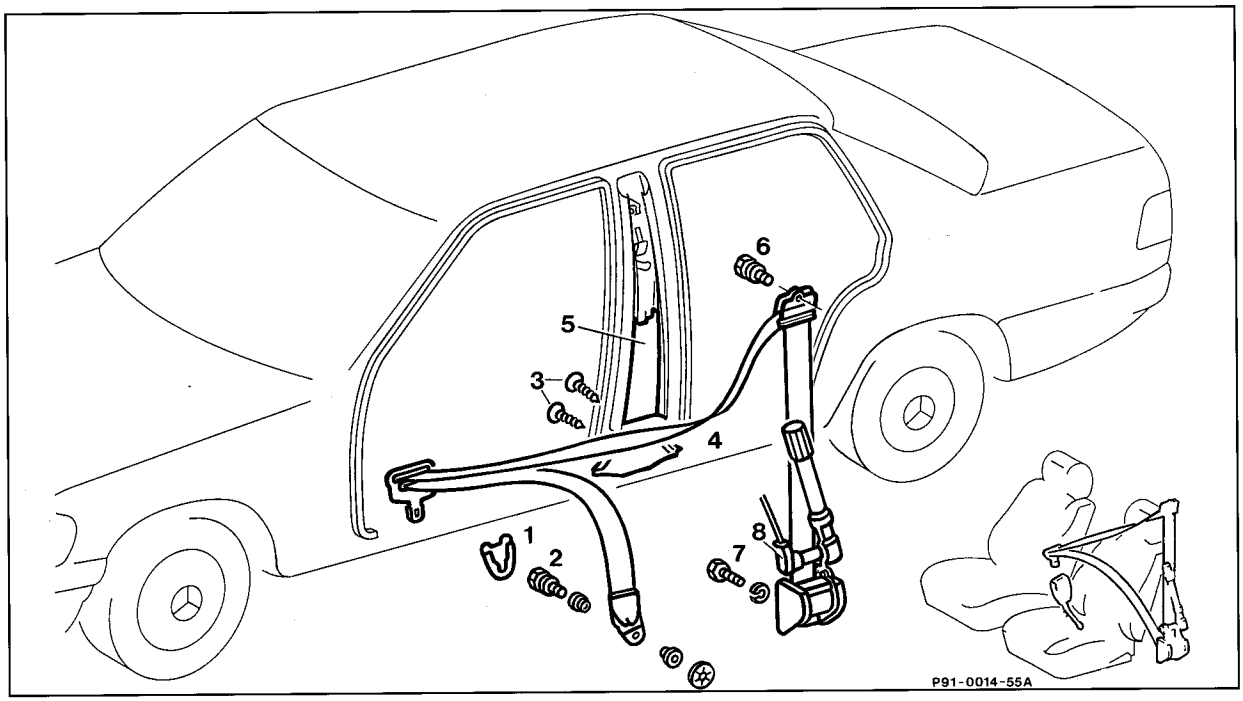

Ignition key	Turn to position "0".
Negative terminal of battery	Disconnect and cover, connect.
With airbag: red 10-pin plug connection in passenger's footwell	Disconnect, connect.
Cover cap (1)	Press off, press in.
Bolt (2)	Unscrew, screw in (35 Nm).

Screws (3) on covering (4)	Unscrew, screw in.
Covering (4)	Remove, install.
Panelling (5) on center pillar	Pull out downwards, install.
Belt strap with belt buckle latch	Pull through opening in panelling.
Bolt (6) on sash guide	Unscrew, screw in (35 Nm)
Bolt (7) on belt retractor	Unscrew, screw in (35 Nm)
Plug connector (8) of belt tensioner detonator	Disconnect, connect.
Belt tensioner	Remove from center pillar, install.

B. Coupé

Op. No. of Job Texts and Work Units,
Standard Texts and Flat Rates .....

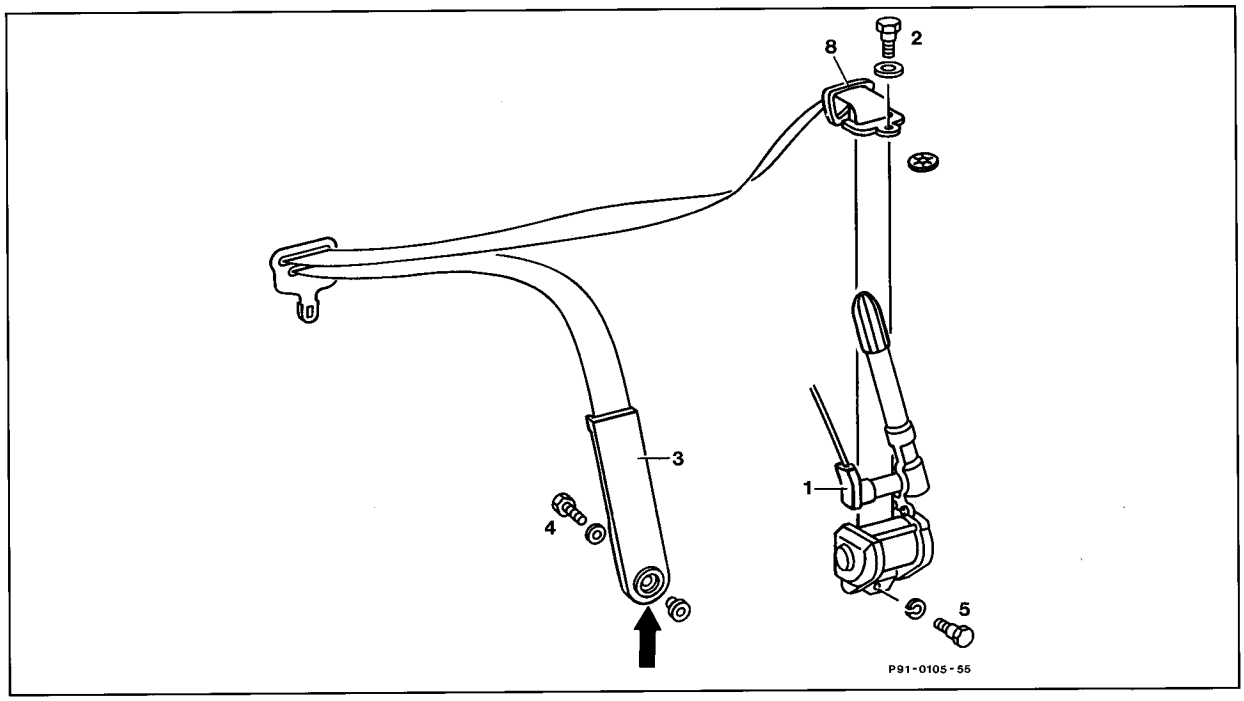

Side wall panelling in rear passenger compartment	.....	Remove, install (68-456).
Ignition key	.....	Turn to position "0".
Negative terminal of battery	.....	Disconnect and cover, connect.
With airbag: red 10-pin plug connection in passenger's footwell	.....	Disconnect, connect.

Plug connector (1) of belt tensioner detonator	Disconnect, connect.
Bolt (2) on sash guide	Unscrew, screw in (35 Nm).
Sash guide (8)	Pull out, insert.
Cover (3) for swivel fitting	Open using plastic wedge (arrow). Refer to installation note.
Bolt (4) on side member	Unscrew, screw in (35 Nm).
Bolt (5) on belt retractor	Unscrew, screw in (35 Nm).
Belt tensioner	Remove. Refer to installation note.

Installation note

When installing the belt tensioner, note that there are different versions (for left and right) and ensure that it locates correctly in the catch.

1 When installing a new belt tensioner, open the cover on the swivel fitting using a plastic wedge. Screw the bolt into the side member (35 Nm), close the cover on the swivel fitting and pull out the catch to spring-lock the swivel fitting.

2 When reinstalling the removed belt tensioner, insert the coil spring with its plastic insert into the top section of the swivel fitting and hook in the spring.

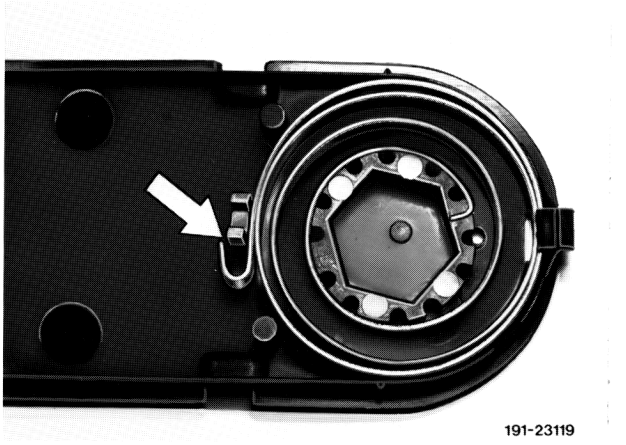

191-23119

3 Insert Allen wrench into plastic insert and tension spring by rotating through 180°.

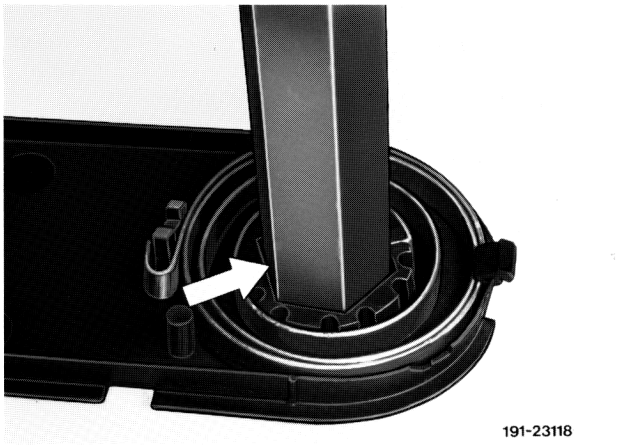

191-23118

4 Prepare special tool (if not available).

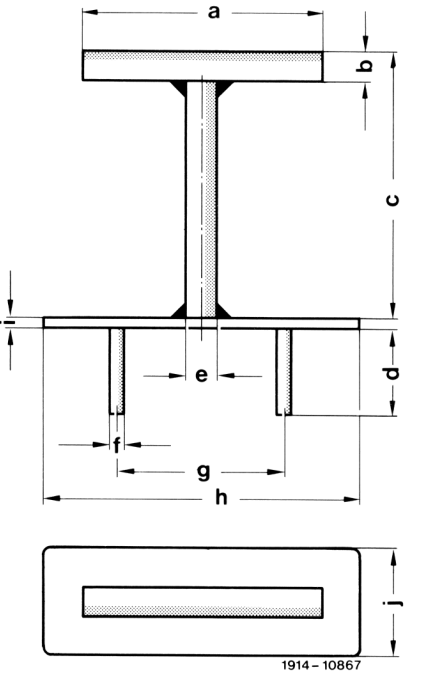

1914-10867

a 45 mm
b 4 mm dia.
c 35 mm
d 8 mm
e 4 mm dia.
f 2 mm dia.
g 24 mm
h 40 mm
i 1.5 mm
j 8 mm

5 Lock pretensioned plastic insert from the rear face of the top section using special tool.

191-23125

Note

The swivel fitting on the side member must draw the unworn seat belt downwards into the rear corner by means of the spring force so that there is no loop which may ensnare occupants of the vehicle.

After installation, check whether the belt strap is fully retracted.

To test this, draw out the belt diagonally downwards and feed it back by hand together with the buckle latch as far as the guide bracket of the belt reel.

91-638 Removing and installing belt buckle

Op. No. of Job Texts and Work Units,
Standard Texts and Flat Rates .....

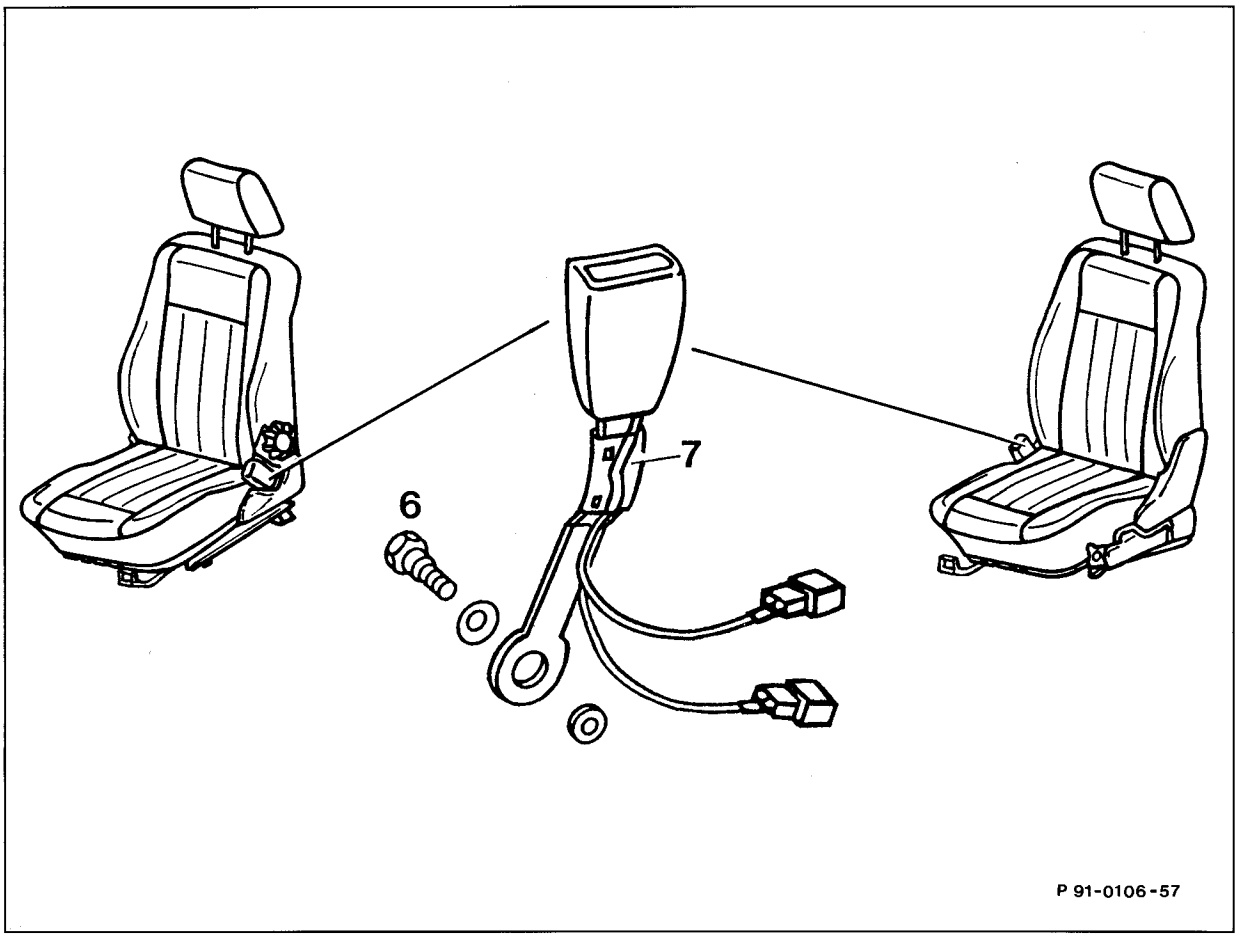

Driver's and/or passenger's seat	Remove, install (91-100/110).
Covering on fixed seat fitting	Pull to the rear, pull off sideways and remove; install.
Bolt (6) on belt buckle	Unscrew, screw in.
In vehicles with airbag, belt reel, belt warning	Open, close cable straps under seat cushion.
Complete belt buckle (7) with cable	Remove, install.

91-640 Removing and installing reserve power source for airbag and belt tensioner (up to 09/87)

Op. No. of Job Texts and Work Units,
Standard Texts and Flat Rates .....

Note
In vehicles with airbag 1/3 (recognisable from the inscription 1/3 on the test coupling/plug connection, airbag, 10-pin, X29/9), the reserve power source is removed and the plug connection is isolated.

Special tool

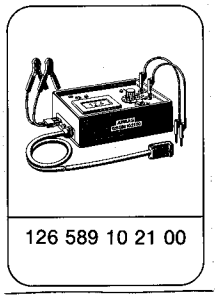

126 589 10 21 00

1st version

Note
The 2nd version differs in the

- modified location of the red 10-pin plug connection from the foot rest to the plate situated under the foot rest.

- modified location of the reserve power source from the foot rest to the plate situated under the foot rest.

Removing

1 Turn ignition key to position "0", disconnect negative terminal of battery and cover.

2 Remove foot mat and insulation in passenger's footwell.

3 Unscrew nuts on foot rest.

4 Unscrew screws and invert foot rest.

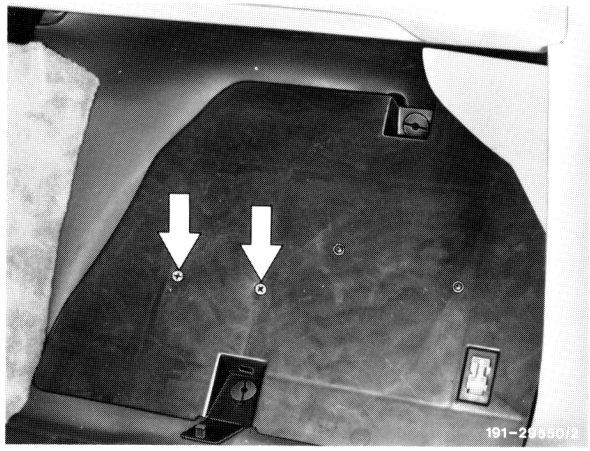

5 Disconnect red 10-pin plug connection of control unit at foot rest.

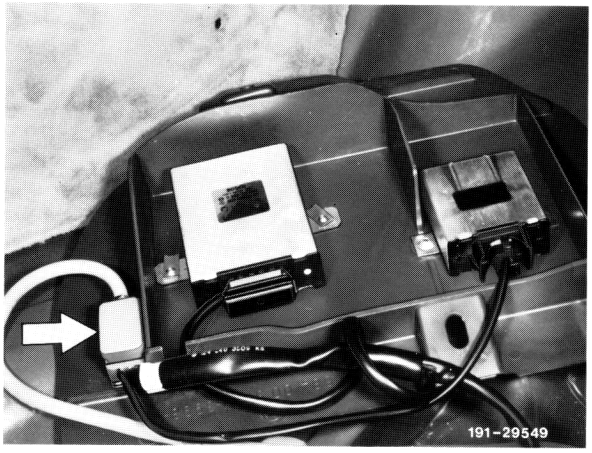

6 Disconnect plug connection and remove reserve power source.

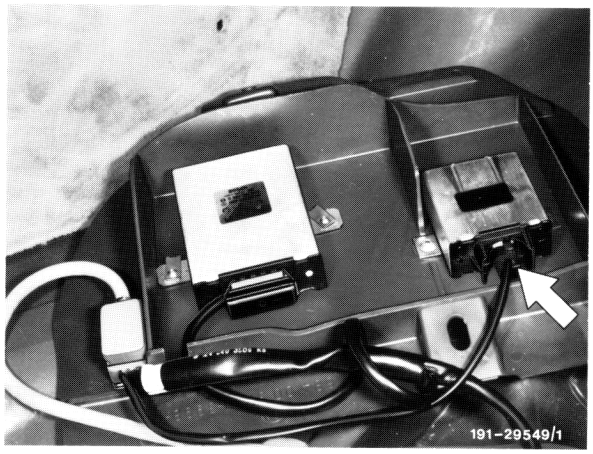

Installing

7 Connect plug to reserve power source and screw in reserve power source.

8 Check system using tester (91-700).

9 Continue installation in the reverse sequence.

10 Check system with RS warning lamp.

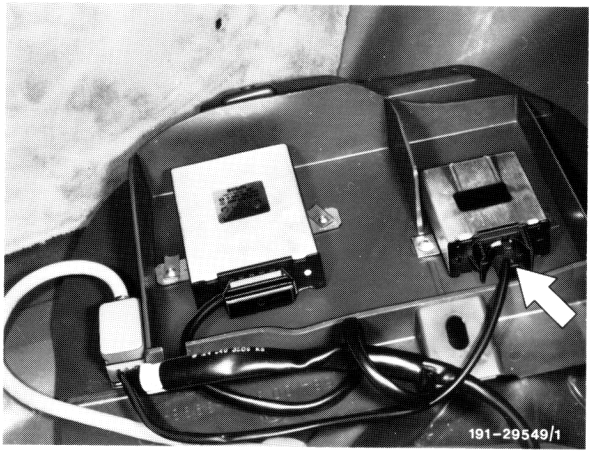

2nd version

Removing

1 Turn ignition key to position "0", disconnect negative terminal of battery and cover.

2 Remove foot mat and insulation in passenger's footwell

3 Unscrew screw at bottom of foot rest. Remove foot rest.

4 Disconnect red 10-pin plug connection on plate.

5 Remove right-hand door entry strip.

6 Press off edge guard on right-hand side.

7 Remove side panelling in passenger's footwell..

X29/9 10-pin plug connection

8 Disconnect plug connector from reserve power source connection.

9 Unscrew clips from stay pins and remove reserve power source.

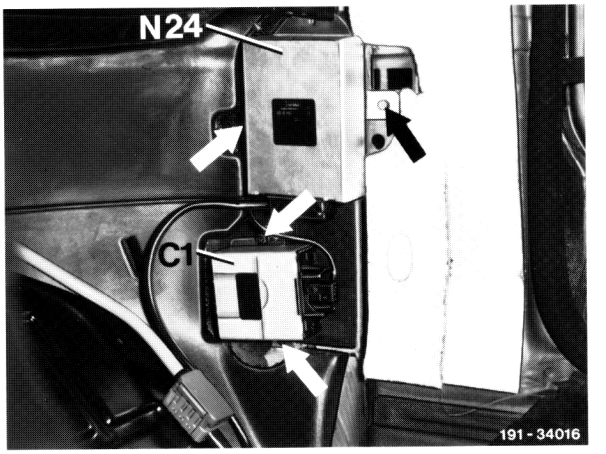

C1 Reserve power source

Installing

10 Attach plug connector to reserve power source connection.

11 Secure reserve power source to the two stay pins with clips by screwing in or pressing in with the handle of a hammer.

12 Check system using tester (91-700).

13 Continue installation in the reverse sequence.

14 Check system using RS warning lamp.

91-650 Removing and installing voltage transformer for airbag and belt tensioner (up to 09/87)

Op. No. of Job Texts and Work Units,
Standard Texts and Flat Rates .....

Note
In vehicles with airbag 1/3 (recognisable from the inscription 1/3 on the test coupling/plug connection, airbag, 10-pin, X29/9). the voltage transformer is removed and the cable ends isolated.

Special tool

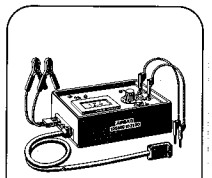

126 589 10 21 00

1st version

Note
The 2nd version differs in the

- modified location of the red 10-pin plug connection from the foot rest to the plate situated under the foot rest.

- modified location of the voltage transformer from the foot rest to underneath the side panelling in the passenger's footwell.

Removing

1 Turn ignition key to position "0", disconnect negative terminal of battery and cover.

2 Remove foot mat and insulation in passenger's footwell.

3 Unscrew nuts on foot rest.

4 Unscrew screws and invert foot rest.

5 Disconnect red 10-pin plug connection of control unit at foot rest.

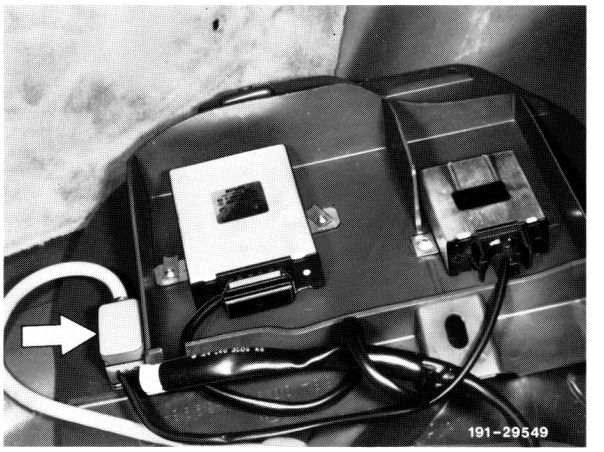

6 Disconnect plug connection and remove voltage transformer.

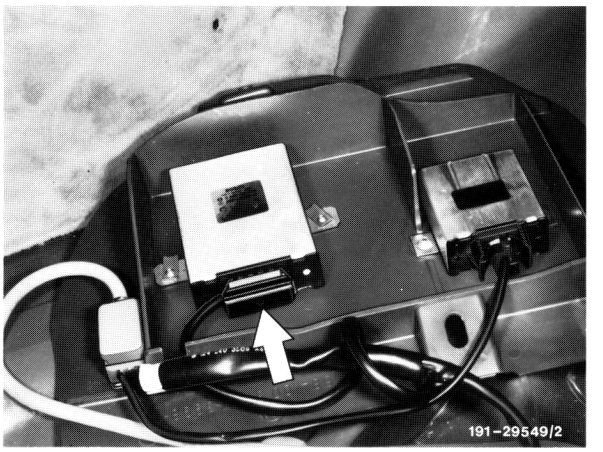

Installing

7 Connect plug to voltage transformer and bolt on voltage transformer.

8 Check system using tester (91-700).

9 Continue installation in the reverse sequence.

10 Check system using RS or SRS warning lamp.

2nd version

Removing

1 Turn ignition key to position "0", disconnect negative terminal of battery and cover.

2 Remove foot mat and insulation in passenger's footwell.

3 Unscrew screw at bottom of foot rest. Remove foot rest.

4 Disconnect red 10-pin plug connection on plate.

5 Remove right-hand door entry strip.

6 Press off edge guard on right-hand side.

7 Remove side panelling in passenger's footwell.

X29/9 10-pin plug connection

8 Disconnect plug connector from voltage transformer connection.

9 Unscrew clip and tapping screw and remove voltage transformer.

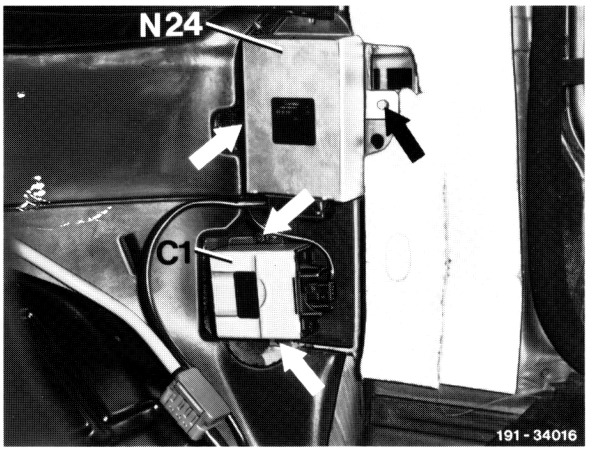

N24 Voltage transformer

Installing

10 Connect plug connector to voltage transformer connections.

11 Secure voltage transformer using clip and tapping screw.

12 Check system using tester (91-700).

13 Continue installation in the reverse sequence.

14 Check system using RS or SRS warning lamp.

91-660 Removing and installing airbag unit in steering wheel

Op. No. of Job Texts and Work Units,
Standard Texts and Flat Rates .....

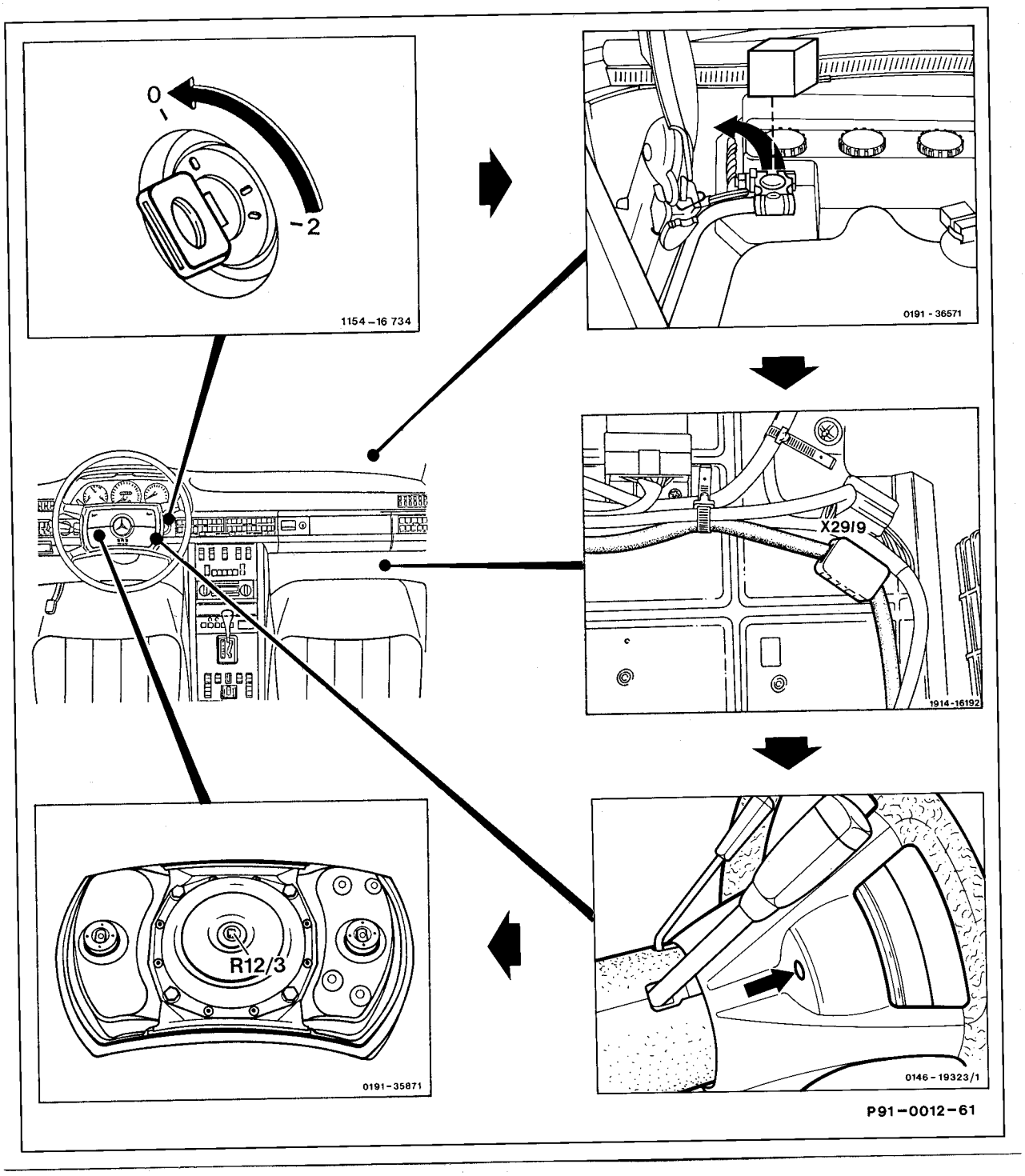

Removing

Ignition key	Turn to position "0".
Negative terminal of battery	Disconnect and cover.

Foot mat in passenger's footwell	Remove.
Foot rest	Unscrew and remove.
Red test coupling for airbag plug connection (X29/9)	Disconnect.
Both bolts (arrow)	Unscrew using torx socket screwdriver bit whilst holding airbag unit in place.
Airbag unit	Lift off steering wheel.
Plug connection from detonator (R12/3)	Disconnect at gas generator. **Note** Disconnecting this automatically activates a short-circuiting link in the plug connection of the gas generator.
Airbag unit	Lift off steering wheel. Refer to note below and installation note.

Note
No further work should be performed on the entire airbag unit. The airbag unit must be stored under supervision or kept under lock and key if removed for longer periods.

⚠
After removal, always store the airbag unit with the cushioned side uppermost.

Special tool

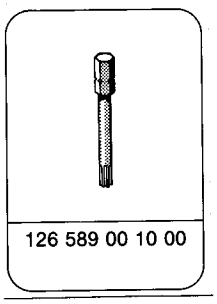

Tightening torque

Torx socket oval-head bolt	6 Nm

Installation note

Airbag units are only available as spare parts as single complete units.

⚠

a) The airbag unit must not be treated with grease, cleaning agents or similar agents.

b) The airbag unit must not be exposed to temperatures above 100 °C even for brief periods.

c) The airbag unit is not shock-resistant. Should it fall onto a hard surface from a height of more than 50 cm, the airbag unit must no longer be installed but must be sent back to the Sindelfingen Plant specially packaged (for shipping).

d) Before installing the airbag unit, check that the battery ground cable is disconnected, the pole is covered and the ignition key is in position "0", and that the test coupling/plug connection for airbag, 10-pin (X29/9), is disconnected.

Installing

Plug connection	Attach to detonator (R12/3) on gas generator. The plug connection must lock audibly.
Airbag unit	Place on steering wheel.
Both torx socket bolts	Screw in loosely approx. 2 revolutions.
Airbag unit	Center visually by hand in the steering wheel opening.
Left-hand torx socket bolt	Screw into steering wheel first and tighten to 6 ± 1 Nm.
Then right-hand torx socket bolt	Tighten to 6 ± 1 Nm whilst pulling the right-hand side of the cushion gently towards you (see paragraph entitled "Noise test, adjustment").
Red test coupling/plug connection for airbag (X29/9)	Connect.
Negative terminal of battery	Connect.
Ignition	Switch on.

Note

The RS or SRS warning lamp must go out after approx. 10 s in vehicles up to 09/87, and after approx. 4 s in vehicles as of 09/87.

Watch the warning lamp whilst moving the steering wheel to full lock in both directions with the engine running. The warning lamp must not light up or flicker.

Check that the horns function correctly and that the combination switch returns automatically.

Noise test, adjustment

Check whether the cushion tilts diagonally by pressing gently with the thumbs from bottom left to top right and top left to bottom right. Diagonal tilting leads to rattling of the airbag unit in the steering wheel. If necessary, repeat the adjustment described above after slackening the right-hand bolt.

Steering wheel, 1st version (installed up to 11/85)

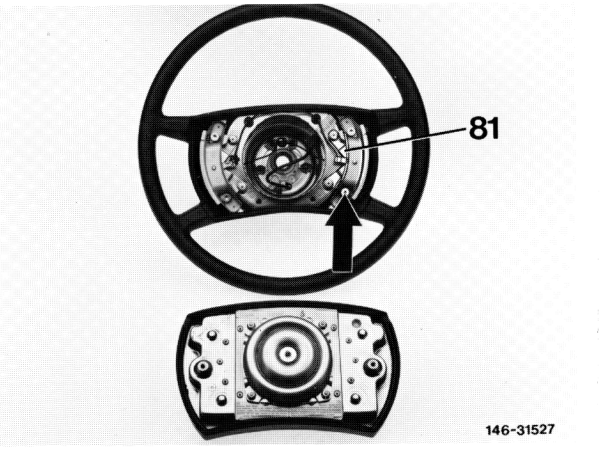

In this version, there is a positioning wheel (80) on the right-hand contact link (57) to eliminate any axial play.

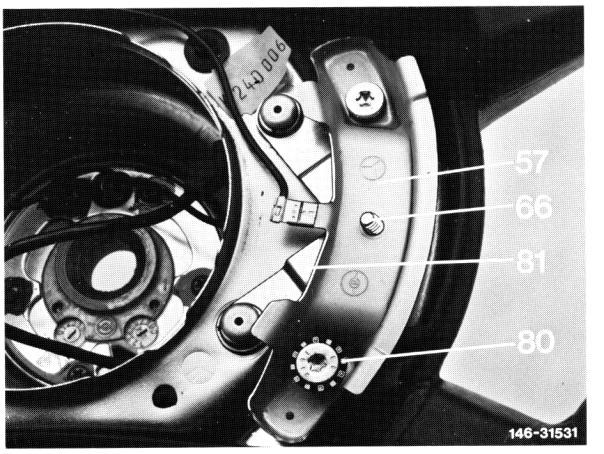

Example:
Play at bottom left or top right: rotate positioning wheel (80) to the left using a suitable tool, e.g. a small screwdriver, until the play is eliminated.

⚠

The airbag unit need not be removed for this. Around the positioning wheel, the steering wheel foam has a molded channel to receive the adjusting tool (see arrow).

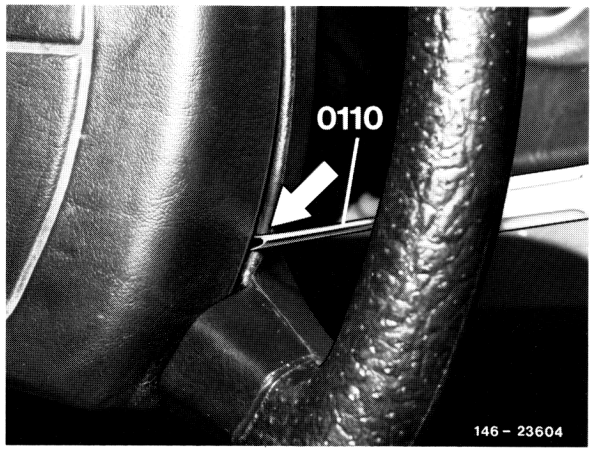

Steering wheel, 2nd version
Slacken oval-head torx socket bolts and align airbag unit on steering wheel so that it is correctly seated. Screw in both torx socket bolts a few threads. Then tighten left-hand torx socket bolt to the specified tightening torque. Gently pull right-hand side of airbag unit away from steering wheel and screw in torx socket bolt to the specified tightening torque.

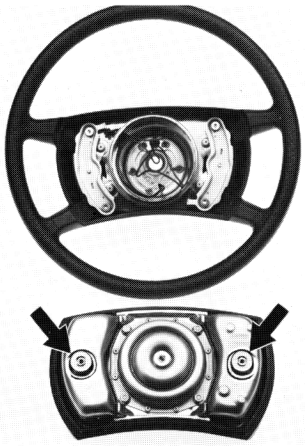

Check system using tester,
part no. 126 589 10 21 00.
After the test, disconnect the ground cable on the battery and connect the plug connection with the ignition switched off. Hook foot rest into firewall and place foot mat in passenger's footwell.
Connect negative terminal of battery.

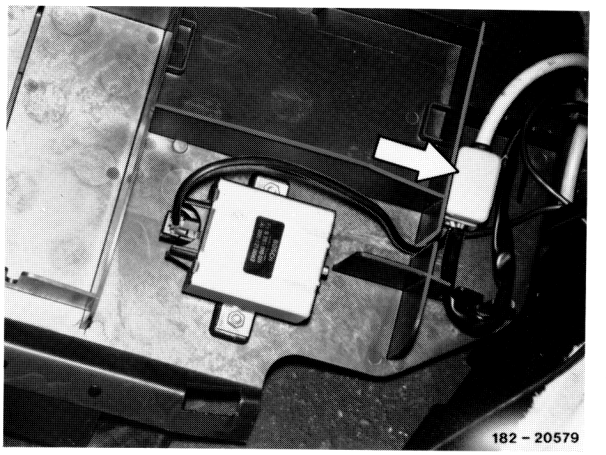

Watch the warning lamp whilst turning the steering wheel to full lock in both directions with the engine running. The warning lamp must not light up or flicker.
Check that the horns function correctly and that the combination switch returns automatically.

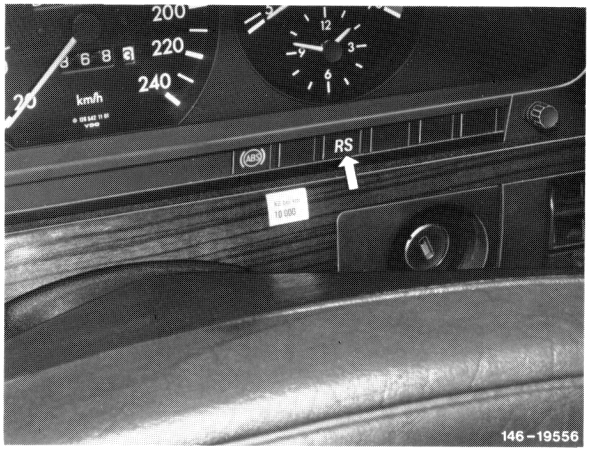

91-680 Removing and installing passenger airbag unit

Op. No. of Job Texts and Work Units,
Standard Texts and Flat Rates .....

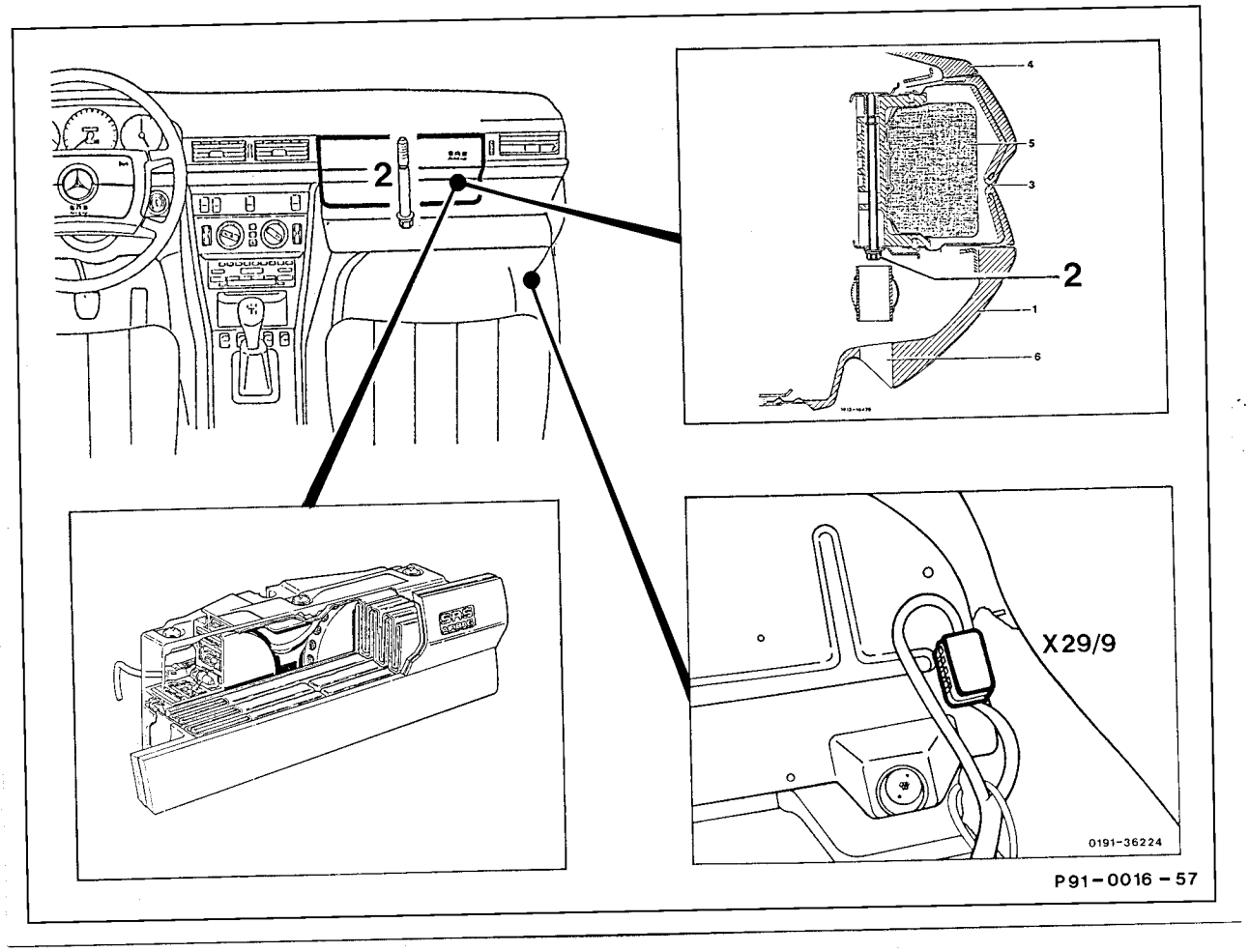

Removing

Ignition	Switch off.
Negative terminal of battery	Disconnect and cover.
Foot mat in passenger's footwell	Remove.
Foot rest in passenger's footwell	Unscrew and remove.
Red test coupling for airbag plug connection (X29/9)	Disconnect.
Central retaining bolt (2) for passenger airbag unit	Unscrew and remove unit.

Plug connectors on passenger airbag unit	Disconnect and remove unit. **Note** Disconnecting these automatically activates a short-circuiting link in the gas generators. The plug connectors must lock audibly. The SRS warning lamp must go out after approx. 4 seconds. Install in the reverse sequence. For adjustment work, refer to paragraph entitled "Adjustment work on the passenger airbag unit".

Note
No futher work must be performed on the entire airbag unit. The airbag unit must be stored under personal supervision or kept under lock and key if removed for a long period.

After removal, always store the airbag unit with the cushioned side uppermost.

Installation note
The airbag unit is only available as a spare part as a single complete unit.

⚠

a) The airbag unit must not be treated with grease, cleaning agents or similar agents.

b) The airbag unit must not be exposed to temperatures above 100 °C even for brief periods.

c) The airbag unit is not shock-resistant. Should it fall onto a hard surface from a height of more than 50 cm, the airbag unit must no longer be installed but must be sent back to the Sindelfingen Plant specially packaged (for shipping).

d) Before installing the airbag unit, check that the ground cable on the battery is disconnected, the pole is covered and the ignition key is in position "0", and that the test coupling/plug connection for airbag, 10-pin (X29/9), is disconnected.

Adjustment work on the passenger airbag unit

1 Using your thumb and first finger, check whether the passenger airbag unit moves by alternately pressing and releasing the left and right sides. If play is discovered, this must be eliminated by screwing the bolts (3 and 4) in or out on one or both sides.

2 Any gaps must be of equal size all around. The transitions must be flush.

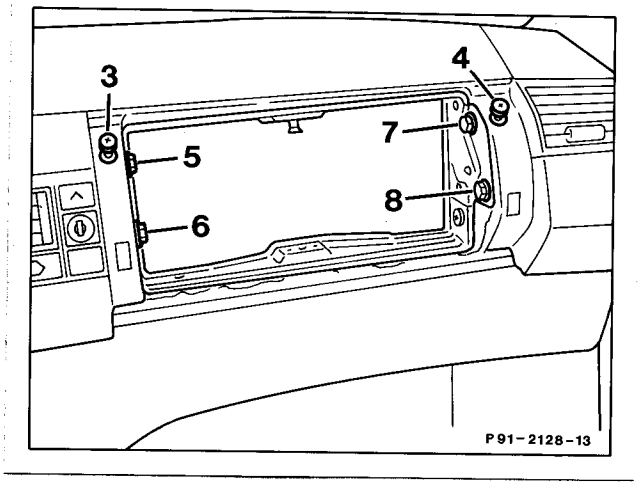

Illustrated for model 129

3 Contact plug connection for airbag test coupling (X29/9).

4 Connect negative terminal of battery.

5 Switch on ignition. The SRS warning lamp must go out after approx. 4 s.

Illustrated for model 129

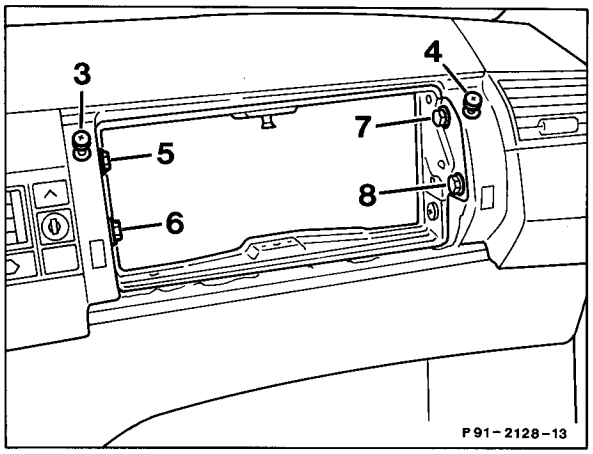

The following adjustment work is necessary if the installation frame on the dashboard was removed:

1 Install installation frame and loosely tighten bolts (5–8).

2 Insert passenger airbag unit and secure with bolt (2).

3 Check adjustment as described under 1–2.

Illustrated for model 129

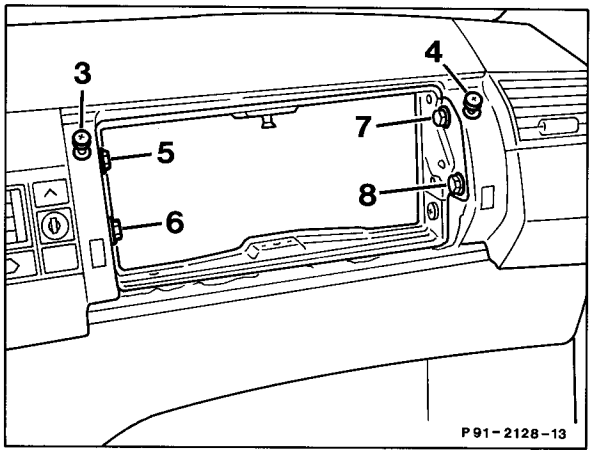

4 If the passenger airbag unit overlaps or projects at the top or bottom, the unit may be tilted downwards by slackening the bolts (5 and 7) or upwards by slackening the bolts (6 and 8).

5 If the passenger airbag unit overlaps or projects on left or right, the unit may be moved forwards or backwards on the left-hand side by slackening the bolts (5 and 6). This can be done on the right-hand side by slackening the bolts (7 and 8).

Note

The passenger airbag unit must always be secured by means of the central retaining bolt when checking its adjustment.

Special tools

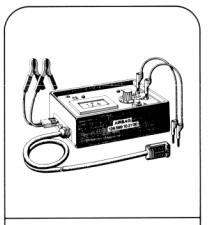

126 589 10 21 00

201 589 00 99 00

Note

The tester 126 589 10 21 00 must always be used when testing the airbag and belt tensioner restraint system. (For test instructions, see paragraphs entitled "Test instructions for tester 126 589 10 21 00").

If other testers are used, there is a danger of triggering the airbag and belt tensioner restraint system.

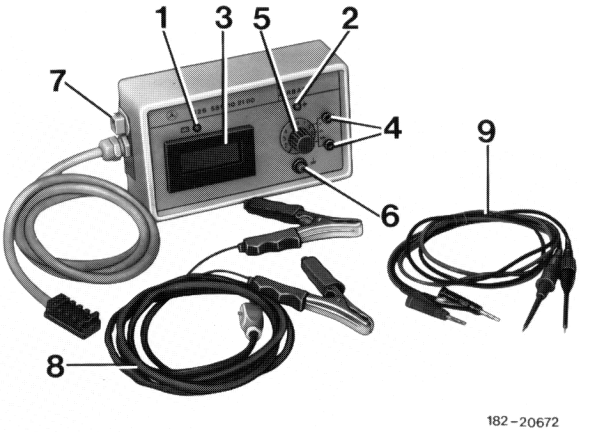

1 Indicator lamp for internal power supply
2 Indicator lamp for reserve power source
3 Digital display
4 Test jacks for external voltage and resistance measurements
5 Test selector switch
6 Ground button (to test the insulation resistance)
7 Connection for external power supply
8 Cable for external power supply
9 Test cable for external voltage and resistance measurements

Connecting tester

1 Turn ignition key to position "0", disconnect negative terminal of battery and cover.

2 Access test coupling/plug connection for airbag, 10-pin (X29/9):
In model 124, on passenger's side foot rest or on the plate below this.

⚠

Before disconnecting the 10-pin plug connection (X29/9) to connect or disconnect the tester, always turn the ignition key to position "0" and disconnect and cover the negative terminal of the battery. It is essential to ensure that the disconnected battery terminal cannot automatically come into contact with the negative pole.

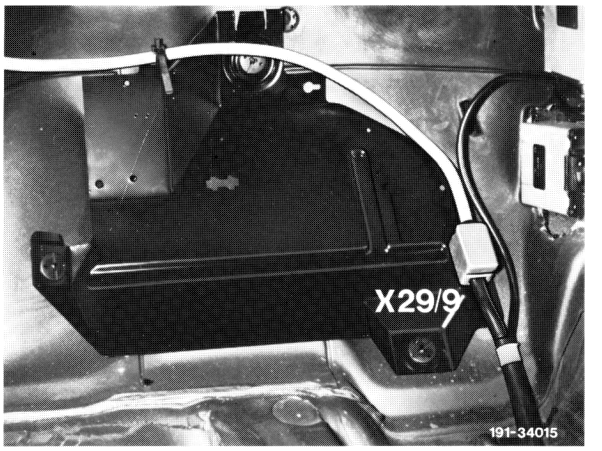

X29/9 10-pin plug connection

3 Disconnect 10-pin plug connection (X29/9) and connect tester with the 10-pin plug of the cable harness.

4 Reconnect battery for test.

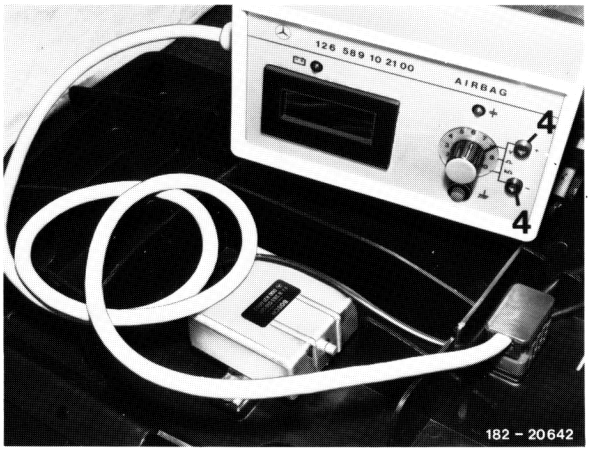

Connecting tester for use for external voltage or resistance measurements.

1 Connect cables (8) for tester power supply to connection (7) and couple to positive and negative poles of battery.

2 Plug test cables (9) into test jacks (4).

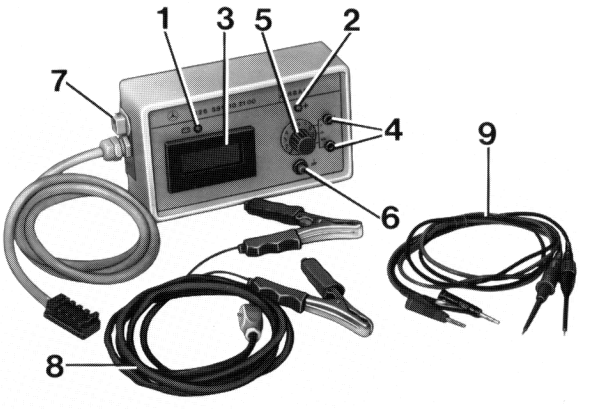

3 When measuring voltages, turn test selector switch to position "8". The display is in volts (V).

4 When measuring resistances, turn test selector switch to position (9). The display is in ohms (Ω).

Note

If the tester is used for external voltage or resistance measurements, it must be disconnected from the 10-pin plug of the airbag and belt tensioner cable harness.

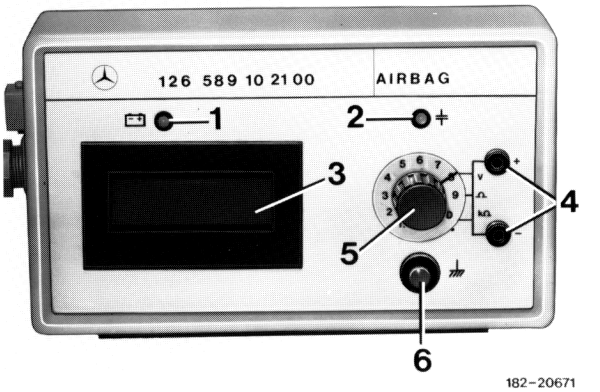

182-20671

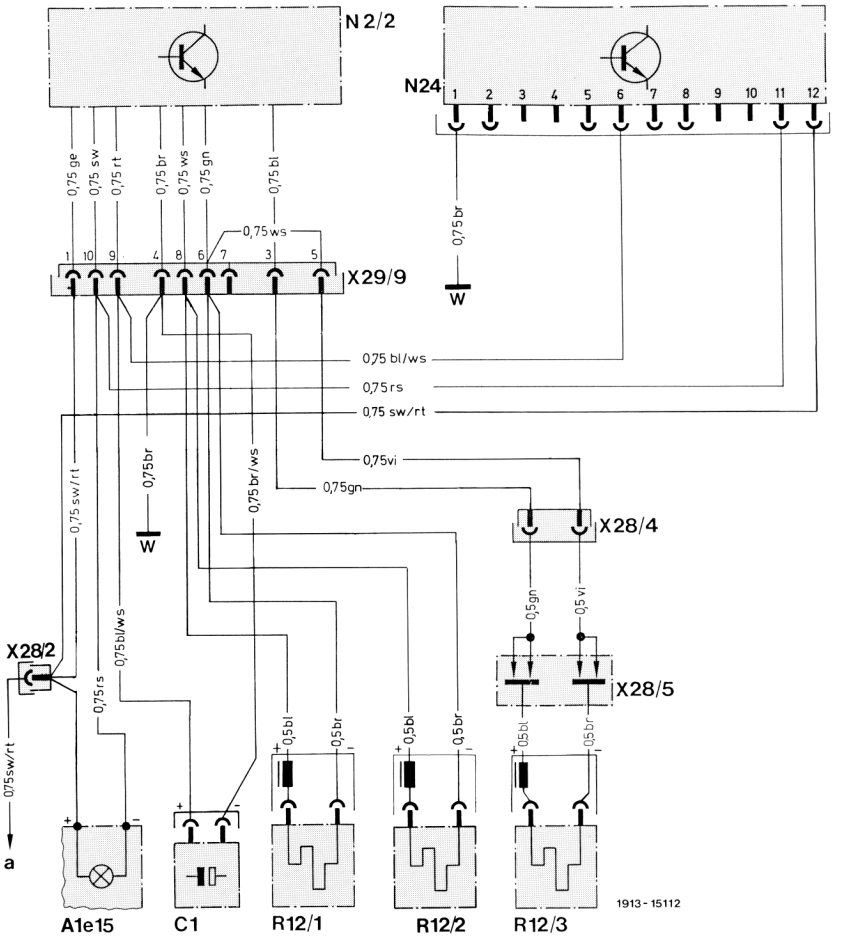

Wiring diagram for airbag and driver's and passenger's belt tensioner system with 4 carbon contacts and voltage transformer (from production launch)

A1e15	Instrument cluster, RS warning lamp, airbag
C1	Reserve power source, airbag
N2/2	Control unit, airbag with belt tensioner
N24	Voltage transformer, airbag
R12/1	Detonator, belt tensioner, front left
R12/2	Detonator, belt tensioner, front right
R12/3	Detonator, airbag
W12★	Main ground point, center console
X28/2	Plug connection, power supply, airbag with belt tensioners
X28/4	Plug connection, airbag, detonator
X28/5	Collector ring, detonator, airbag
X29/9	Test coupling/plug connection, airbag, 10-pin
a	Fuse box, terminal 15 R, fuse 18, input, via X28/2 Terminal 15 R to N2/2, N24, A1e15

★ Marked "W" in wiring diagram

The plug pins 3, 5, 6, 7 and 8 in the bottom section of the plug are short-circuited when the 10-pin plug connection (X29/9) is disconnected. When disconnecting the connectors for the belt tensioner detonators (R12/1, R12/2) and the airbag detonator (R12/3), these are short-circuited.

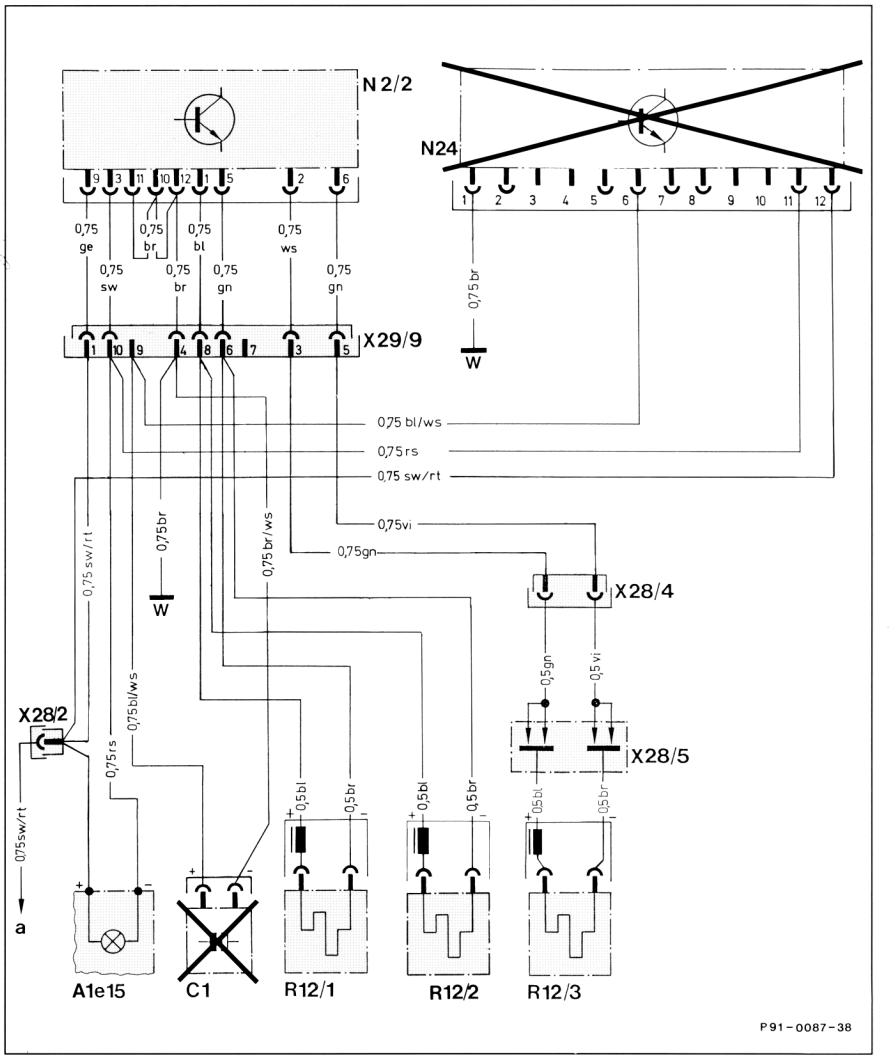

Wiring diagram for airbag and driver's and passenger's belt tensioner system with control unit for airbag 1/3 (recognisable by inscription "Airbag 1/3" on the test coupling/plug connection, airbag X29/9)

A1e15	Instrument cluster, warning lamp, airbag (RS, SRS)
N2/2	Control unit, airbag with belt tensioner
R12/1	Detonator, belt tensioner, left seat
R12/2	Detonator, belt tensioner, right seat
R12/3	Detonator, airbag
W12★	Main ground point, center console
X28/2	Plug connection, power supply, airbag with belt tensioners
X28/4	Plug connection, airbag/detonator
X28/5	Collector ring, detonator, airbag
X29/9	Test coupling/plug connection, airbag, 10-pin
a	Model 124, fuse box, terminal 15 R, fuse 2. Input via X28/2

★ Marked "W" in wiring diagram

Note

In vehicles with airbag 1/3, the reserve power source for airbag (C1) and the voltage transformer for airbag (N24) are removed and the cable ends insulated. The plug pins 3, 5, 6, 7 and 8 on the bottom section of the plug are short-circuited when the 10-pin plug connection (X29/9) is disconnected. When disconnecting the connectors for the belt tensioner detonators (R12/1, R12/2) and the airbag detonator (R12/3), these are short-circuited.

Test program

a) The warning lamp (A1e15) for the restraint system in the instrument cluster fails to light up when the ignition key is turned to position 1 or 2 (ignition).

Check bulb of warning lamp in instrument cluster.

Remove instrument cluster.
Check bulb.

Bulb OK.	Bulb faulty.

Renew bulb.
Turn ignition key to position "1".
Warning lamp must light up and go out again after approx. 10 s or after 4 s in vehicles with airbag 1/3.

Warning lamp goes out.	Warning lamp fails to go out.

Proceed with test step 2

End of test

Check power supply for bulb.

Connect tester for measuring external power (see "Connecting tester").
Turn test selector switch to position "8".
Turn ignition key to position "1".
With the test rods on the bulb socket, check black/red cable, voltage to vehicle ground.
Reference value: battery voltage

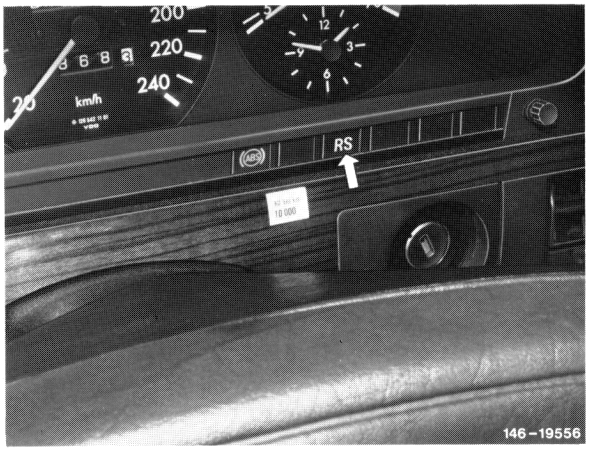

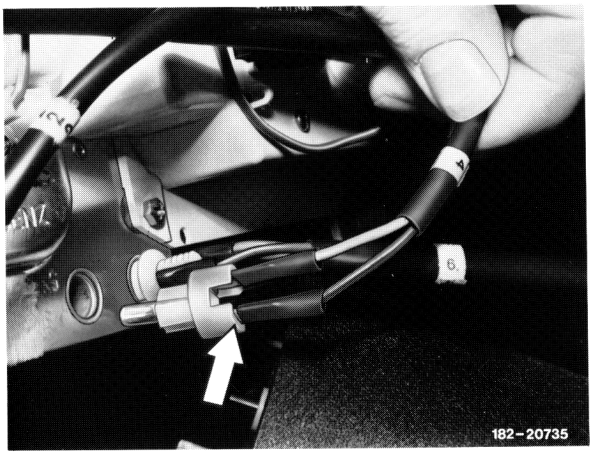

Reference value correct	Reference value incorrect

Disconnect battery.
Turn test selector switch to position "9".
Using test rods, check black/red cable between fuse box, terminal 15 R, fuse 2, input and socket for open circuit.

Reference value: 0 – 1 Ω

Reference value correct	Reference value incorrect

Renew cable harness.
Check airbag and belt tensioner system.

End of test

Connect tester for external measurement of power.
Turn test selector switch to position "8".
Turn ignition key to position "1".
With test rods on terminal 15 R, fuse 2, input, check voltage to vehicle ground.

Reference value: battery voltage

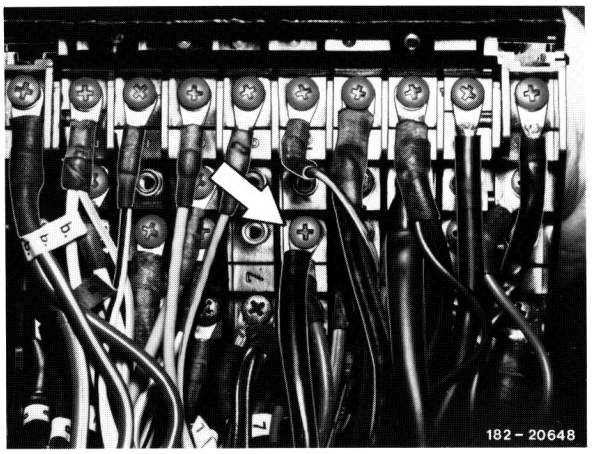

Reference value correct	Reference value incorrect

Check secureness of connections.
Check airbag and belt tensioner system.

End of test

Check 1-pin plug connection (X28/2) (center console)
coupling, black/red cable to vehicle ground.

Reference value: battery voltage

Reference value correct	Reference value incorrect

Renew cable.
Check airbag and belt tensioner system.

End of test

Disconnect battery.
Disconnect 10-pin plug connection (X29/9). In model 124, under passenger's foot rest or on plate beneath this.
Using test rods, check pink cable from 10-pin plug, connection no. 10, as far as socket for open circuit.

Reference value: 0 – 1 Ω

Reference value correct	Reference value incorrect

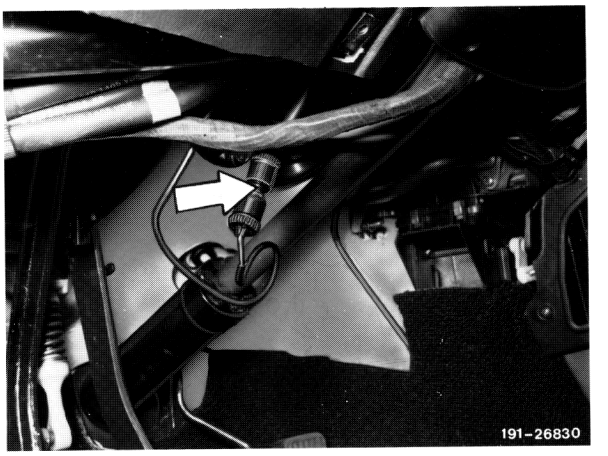

Renew cable harness.
Check airbag and belt tensioner system

End of test

Using test rods, check brown cable from 10-pin plug (X29/9), connection no. 4, to vehicle ground.

Reference value: 0 – 1 Ω

Reference value correct	Reference value incorrect

Open circuit in brown cable from 10-pin plug (X29/9), connection no. 4, to main ground point (W12) in center console.
Renew cable harness.

Check airbag and belt tensioner system.

End of test

Renew control unit.
Check airbag and belt tensioner system.

End of test

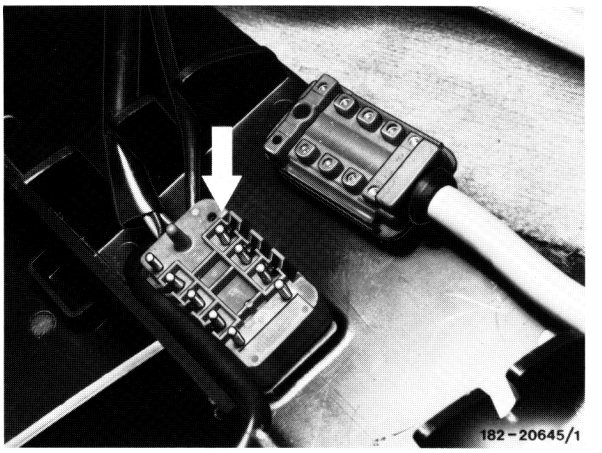

b) After turning the ignition key to position "1", the warning lamp lights up but fails to go out again within 10 s or approx. 4 s in vehicles with airbag 1/3, or flickers intermittently during driving.

Checking airbag and belt tensioner system

Test step 1 (test selector switch position 1)
Test power supply for control unit (battery OK)
Connect tester to 10-pin plug of cable harness (see "Connecting tester").
Turn ignition key to position "1".

Reference value: battery voltage

Reference value correct	Reference value incorrect

Disconnect battery.

Disconnect tester from 10-pin plug of cable harness.
Connect tester for external resistance measurement.
Turn test selector switch to position "9".

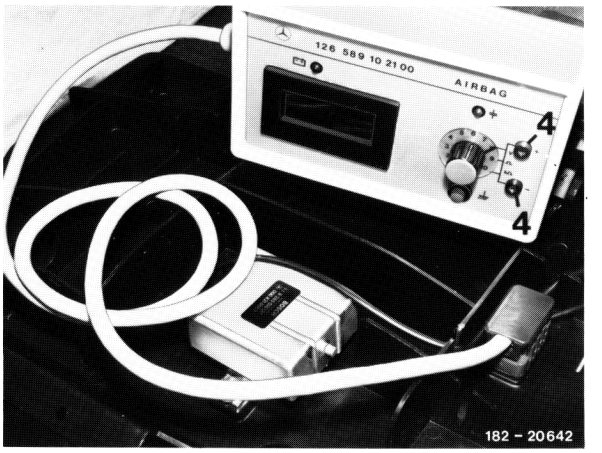

Using test rods, check black/red cable as far as 10-pin plug, connection no. 1, for open circuit.

Reference value: 0 – 1 Ω

Reference value correct	Reference value incorrect

Renew cable harness.
Check airbag and belt tensioner system.

End of test

Using test rods, check brown cable from 10-pin plug (X29/9), connection no. 4, to vehicle ground.

Reference value: 0 – 1 Ω

Reference value correct	Reference value incorrect

Intermittent open circuit in brown cable from 10-pin plug (X29/9), connection no. 4, to main ground point (W12) in center console.

Eliminate open circuit.
Check function of warning lamp (A1e15).

End of test

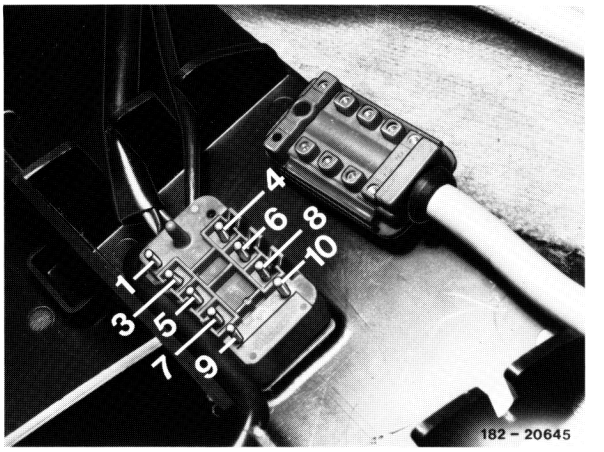

Test step 2 (test selector switch position 2) **Not required for airbag 1/3**
Test voltage transformer (N24)

Connect tester to 10-pin plug, ignition key to position "1".
Reference value: 12 ± 1 volts, minimum test duration 30 seconds.

Reference value correct	Reference value incorrect

Check charge of reserve power source (C1) (test selector switch in position "6")
The reserve power souce (C1) is charged via the tester until the maximum voltage is reached.

Reference value: ≥ 9

Reference value correct	Reference value incorrect

Check capacitance of reserve power source (test selector switch in position "7").

The reading should be taken when the indicator lamp for the reserve power source on the tester goes out (independent of the control unit)

Control unit part no.	126 820 14 10
Res. power source part no. C ≥ 4.0 mF	000 821 00 62
Res. power source part no. C ≥ 7.0 mF	000 821 02 62
Control unit part no. and control unit part no.	124 820 51 10 002 820 97 10
C ≥ 7.0 mF part no.	000 821 02 62

Reference value correct	Reference value incorrect

Disconnect and bridge connection from reserve power source (C1).

Connect tester for external resistance measurement.

Using test rods, measure resistance between connections 4 and 9 on 10-pin plug.

Reference value: 0–1 Ω

Reference value correct	Reference value incorrect

Renew cable harness and check airbag and belt tensioner system.

End of test

Renew reserve power source (C1).

Check function of warning lamp (A1e15).

End of test

Turn ignition key to position "0".
Disconnect tester from 10-pin plug of cable harness.
Connect tester for external measurement of voltage.
Turn test selector switch to position "8".
Disconnect 12-pin coupling from voltage transformer (N24).
Turn ignition key to position "1".
Check power supply to voltage transformer (positive test rod to 12, negative test rod to socket 1).

Reference value: battery voltage

Reference value correct	Reference value incorrect

Turn ignition key to position "0".
Turn test selector switch to position "9".
Using both test rods, check cable from socket 6 to 10-pin plug 9 for open circuit.

Reference value: 0 – 1 Ω

Reference value correct	Reference value incorrect

Renew voltage transformer (N24).
Check function of warning lamp (A1e15).

End of test

Renew cable harness and check airbag and belt tensioner system.

End of test

Turn ignition key to position "0".
Turn test selector switch to position "9".
Using both test rods, check black/red cable from socket 12 to fuse box, terminal 15R, for open circuit.

Reference value: 0 – 1 Ω

Reference value correct	Reference value incorrect

Open circuit in brown cable from socket 1 to main ground point.
Check function of warning lamp (A1e15).

End of test

Renew cable harness and check airbag and belt tensioner system.

End of test

Test step 3
Test resistance of airbag detonator (R12/3).

To do this, turn steering wheel to full lock left and right several times.

Tester connected to 10-pin plug, ignition key in position "1".

Reference value: 2 – 6 Ω

Reference value correct	Reference value incorrect

To test insulation resistance (cable harness for short circuit to ground), press ground button (arrow).

Reference value: ≥ 20 kΩ (EEE)

Reference value correct	Reference value incorrect

Renew cable harness and check airbag and belt tensioner sytem.

End of test

Disconnect 2-pin plug connection (X28/4) under dashboard (to do this, disconnect and reconnect the battery).
Resistance ≥ 20 kΩ EEE (∞)
If resistance is lower, renew cable harness and check airbag and belt tensioner system. If resistance ≥ 20 kΩ EEE (∞), bridge 2-pin plug then read off resistance.

Reference value: 0 – 1 Ω

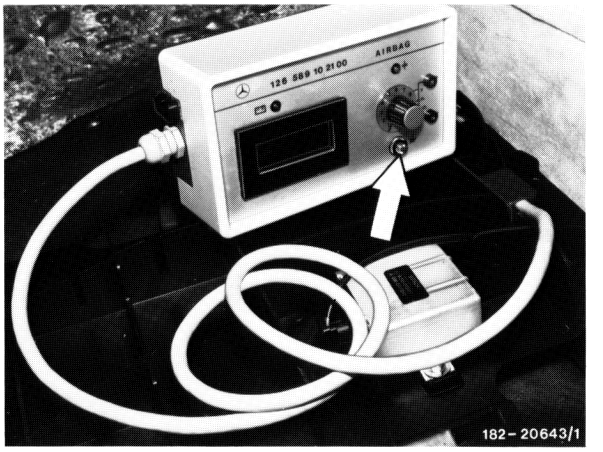

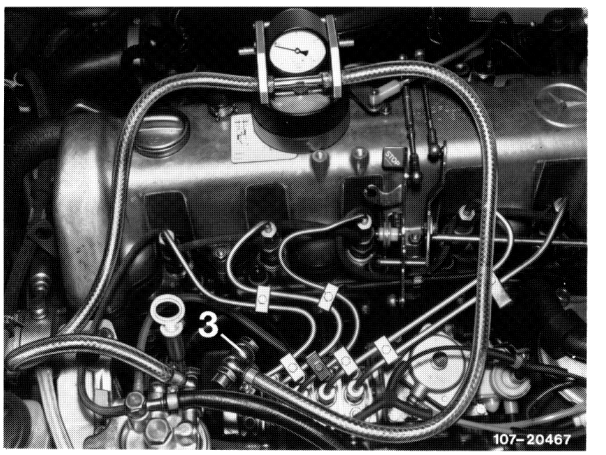

Reference value correct	Reference value incorrect

Renew cable harness and check airbag and belt tensioner system.

End of test

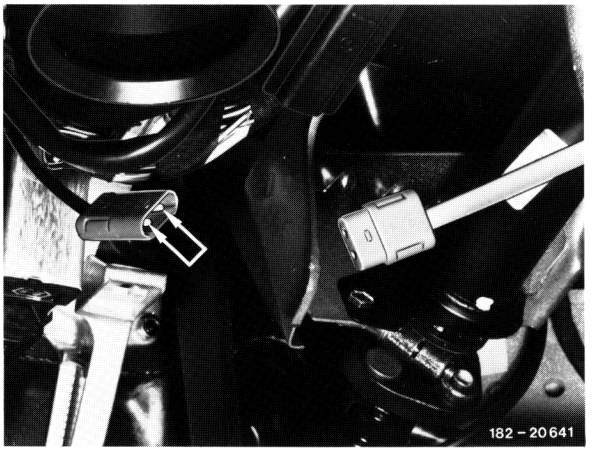

Remove airbag unit (to do this, disconnect battery).
Bridge connection for airbag unit.
Re-contact 2-pin coupling with 2-pin plug under dashboard (X28/4).
Measure resistance.

Reference value: 0 – 6 Ω

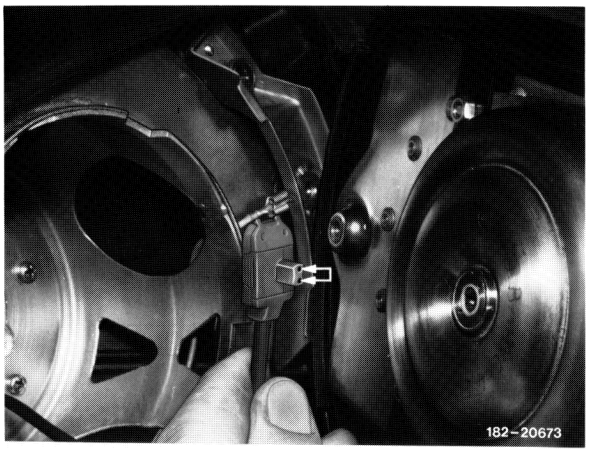

Reference value correct	Reference value incorrect

Renew airbag unit.
Check function of warning lamp (A1e15).

End of test

Remove steering wheel.
Bridge carbon contacts one after the other.
Measure resistance.

Reference value: 0 – 1 Ω

Reference value correct	Reference value incorrect

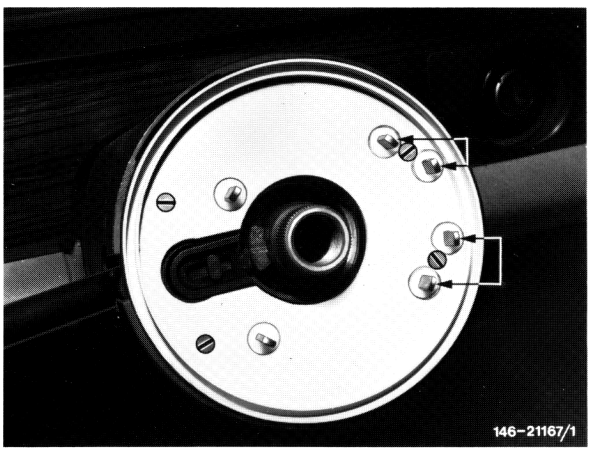

Renew collector ring

Renew carbon contacts

Note
Ensure that there is good contact between the collector ring and the carbon contacts (no grease).

Check function of warning lamp (A1e15).

End of test

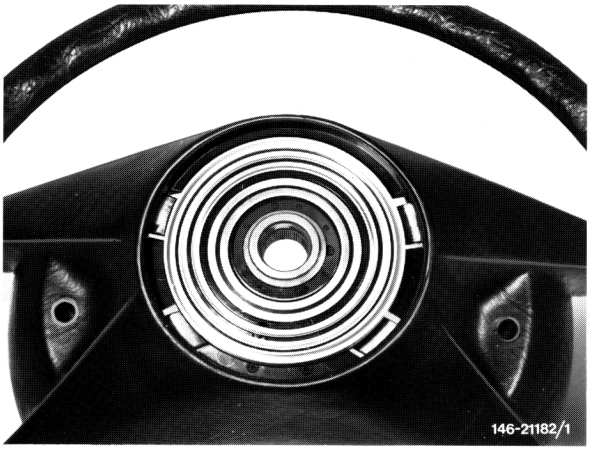

Test step 4
Test resistance of belt tensioner unit

Tester connected to 10-pin plug, ignition key in position "1".

Reference value: 2 – 6 Ω (with 1 belt tensioner)
Reference value: 1 – 1.7 Ω (with 2 belt tensioners)

Reference value correct	Reference value incorrect

Check insulation resistance;
to do this, press ground button.

Reference value: ≥ 20 kΩ (EEE) ∞

Reference value correct	Reference value incorrect

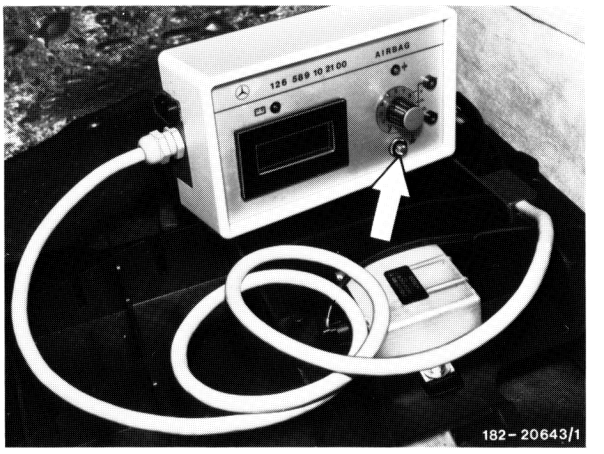

Renew cable harness and check airbag and belt tensioner system.

End of test

Remove covering for right-hand seat belt.
Disconnect connector for belt tensioner unit.
Resistance ≥ 20 kΩ EEE(∞).
If resistance is lower, renew cable harness and check airbag and belt tensioner sytem.
If resistance ≥ 20 kΩ EEE (∞), bridge connection.
Measure resistance.

Reference value: 0 – 1 Ω

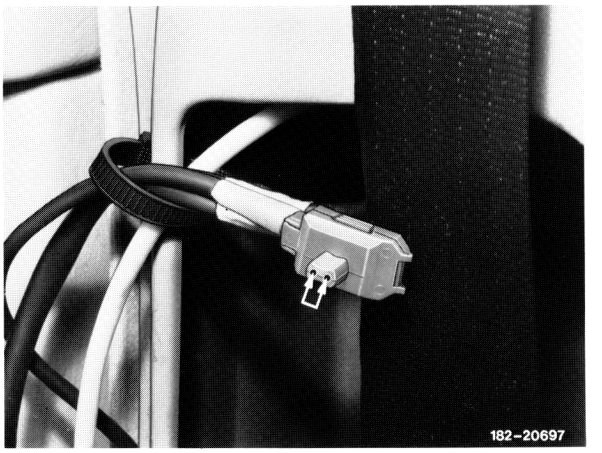

Reference value correct	Reference value incorrect

Renew belt tensioner unit

Renew cable harness

Check airbag and belt tensioner system.

End of test

Test step 5 is not required.

Test step 6
Test charge of reserve power source (C1).
Not required for airbag 1/3

The reserve power source (C1, capacitor) is charged via the tester until the maximum voltage is reached.

Reference value: ≥ 9

Reference value correct	Reference value incorrect

Disconnect connection from reserve power source (C1).
Bridge connection.
Connect tester for external resistance measurement.
Using test rods, measure resistance between connections 4 and 9 on 10-pin plug.

Reference value: 0 – 1 Ω

Reference value correct	Reference value incorrect

Renew cable harness and check airbag and belt tensioner system.

End of test

Renew reserve power source (C1) and repeat test step 6.

Reference value correct	Reference value incorrect

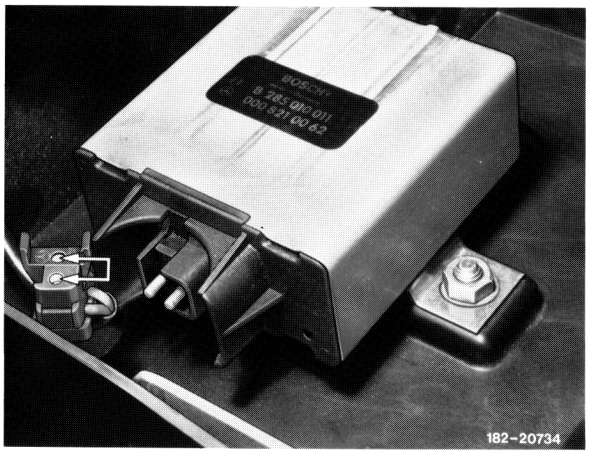

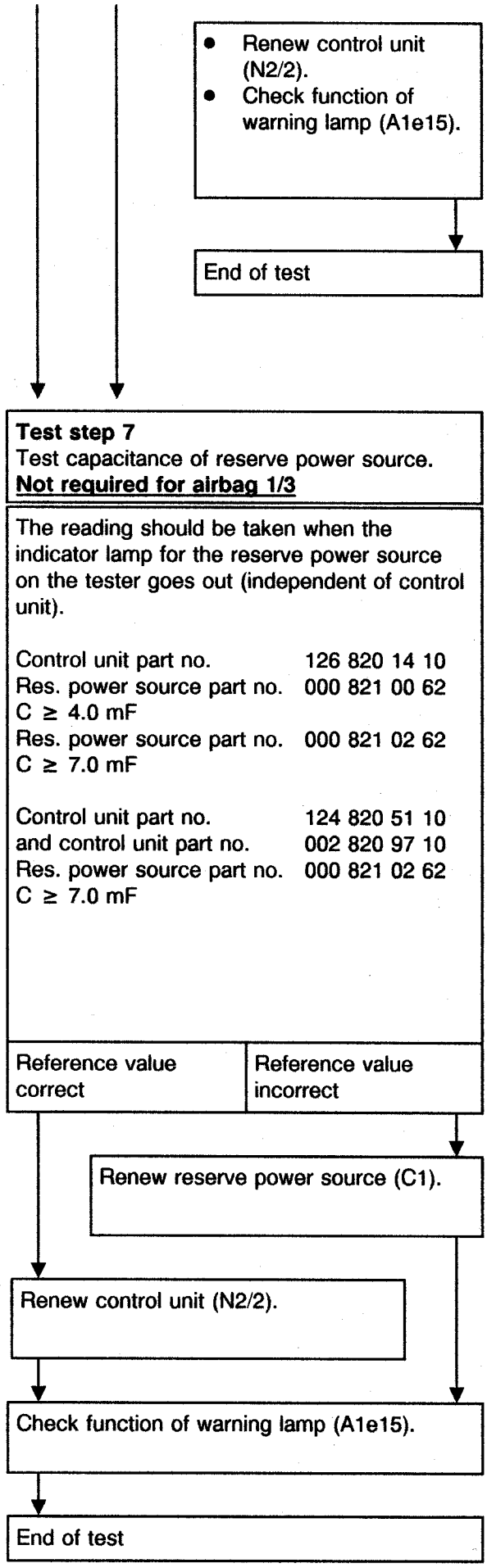
• Renew control unit (N2/2).
• Check function of warning lamp (A1e15).
End of test
Test step 7
Test capacitance of reserve power source.
Not required for airbag 1/3
The reading should be taken when the indicator lamp for the reserve power source on the tester goes out (independent of control unit).
Control unit part no. 126 820 14 10
Res. power source part no. 000 821 00 62
C ≥ 4.0 mF
Res. power source part no. 000 821 02 62
C ≥ 7.0 mF
Control unit part no. 124 820 51 10
and control unit part no. 002 820 97 10
Res. power source part no. 000 821 02 62
C ≥ 7.0 mF
Reference value correct
Reference value incorrect
Renew reserve power source (C1).
Renew control unit (N2/2).
Check function of warning lamp (A1e15).
End of test

Test instructions for tester 126 589 10 21 00
(revised)

Before testing with the tester, the airbag restraint system must be tested by means of the RS/SRS warning lamp (A1e15). With the ignition switched on, the RS/SRS warning lamp should light up for approx. 10 s, or approx. 4 s in vehicles with airbag 1/3. If necessary, check warning lamp or cable.

⚠

Each time before disconnecting the red test coupling/plug connection for airbag, 10-pin (X29/9), to connect the tester, the ignition key must be turned to position "0", the negative terminal of the battery disconnected and covered. Then reconnect the battery for the test.

Test step	Scope of test	Operation	Reference value	Possible causes if reference value not attained
1	Power supply	Ignition: OFF Disconnect 10-pin coupling (X29/9) and connect cable harness plug connector with tester. Ignition: ON	LED: ⊟+ ON Battery voltage	Battery charge not OK Cable harness faulty
2[1)]	Voltage transformer N24 (not installed in all vehicles)	Ignition: ON	LED: ⊟+ ON U = 12 ± 1 V after 30 s	Voltage transformer faulty Reserve power source faulty Cable harness faulty
3	Resistance of airbag unit (R12/3) Collector ring	Ignition: ON Turn steering wheel to full lock (left and right)	LED: ⊟+ ON R = 2 – 6 Ω	Contact between collector ring and carbon contact faulty Cable faulty Driver airbag unit faulty
	Insulation resistance	Ignition: ON Press ⊥ button	LED: ⊟+ ON R ≥ 20 kΩ–EEE (EEE = ∞)	Cable harness faulty Airbag unit faulty

[1)] Not required for airbag 1/3

4	Resistance of belt tensioner, passenger's belt tensioner detonator (R12/2) Detonators for driver's and passenger's belt tensioners (R12/1 and R12/2)	Ignition: ON	LED: ⊟ ON R = 2 – 6 Ω (Parallel circuit) R = 1 – 1.7 Ω	Cable faulty Belt tensioner unit faulty Cable faulty Belt tensioner unit faulty
	Insulation resistance	Ignition: ON Press ⊥ button	LED: ⊟ ON R ≥ 20 kΩ–EEE (EEE = ∞)	Cable harness faulty Airbag unit faulty
5	Not required			
6[1)]	Check charge of reserve power source (C1)	Ignition: ON	LED: ⊟ ON ON Ref. value > 9	Cable faulty Reserve power source faulty
7[1)]	Check capacitance of reserve power source (C1)	Ignition: ON	LED ⊟ ON ON goes out, then take reading C ≥ 4.0 mF C ≥ 7.0 mF	Reserve power source faulty
	Observe assignment	Control unit part number	Capacitance of reserve power source	Reserve power source part number
		126 820 14 10 002 820 97 10 124 820 51 10	4.0 mF 7.0 mF 7.0 mF 7.0 mF	000 821 00 62 000 821 02 62 000 821 02 62 000 821 02 62

Further applications using the tester as a voltmeter or ohmmeter (in the context of the airbag test only)

8 Volt-meter (volts)	Voltage measurements	External power supply cable to 12 V battery	LED: ⊟ ON U = 0 – 99.9 V	
9 Ohm-meter Ω	Resistance measurements		LED: ⊟ ON R = 0 – 99.9 Ω	
10 Ohm-meter (kΩ)	Not possible with tester 126 589 10 21 00, if necessary, use only approved digital multimeter (e.g.: Sun, DMM 5), Avometer			

[1)] Not required for airbag 1/3

A. General

There is a diagnosis program integrated into the control unit (N2/2), which checks the control unit and the airbag system components.

When a fault is detected:

- warning lamp (A1e15) does not light up in steering lock key position "1"
- does not go out after 4 s
- lights up when the vehicle is driven

The warning lamp goes out again when no more faults are present; however, the fault remains stored. The stored fault can be called up in the form of a flashing pulse via warning lamp (A1e15) or digitally via a pulse meter. The number of flashing pulses indicates the fault detected (refer to table of pulse displays).

Test conditions

- During pulse output, the test coupling/plug connection for airbag (X29/9) remains contacted.
- Battery voltage (11 – 14 V).

Special tools

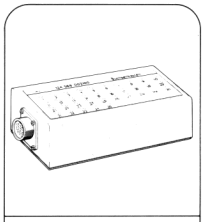

124 589 00 21 00

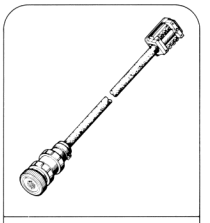

124 589 35 63 00

201 589 00 99 00

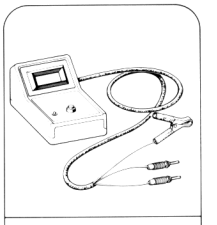

124 589 19 21 00

Conventional tool

Multimeter	e.g. Sun, DMM-5 or Hermann, Avometer 2003 Fluke, 23

B. Trouble diagnosis using the pulse meter

Notes on the pulse display

If no fault is indicated via the pulse display in the event of a complaint, the function test, section "C/d" must be performed.

The number 1 signifies that no fault is recorded in the electronic sytem. All other numbers are assigned to a certain fault circuit.

The numbers 1 through 10 appear on the display of the pulse meter.

- If the light-emitting diode "U Batt:" lights up after connection, both the pulse meter and the power supply for the pulse meter are in order.

Testing

- Connect pulse meter in acccordance with connection diagram.

Note
Light-emitting diode "U Batt:" in the display must light up.
If it fails to do so switch multimeter to "volts" position and

a) Test socket 1 of test coupling X92 to battery positive (11 – 14 V).

b) Test socket 6 of test coupling X92 to socket 1 (6 – 12 V).

- Press start button for between 2 and 4 seconds.
- Read off displayed pulse output and note down.
- Press start button again for between 2 and 4 seconds. The previous number appears again if there are no more faults in the system.
- Eliminate noted fault (pulse output) in accordance with the fault-finding diagram.
- Test individual components.

Clearing the fault memory
The displayed pulse must be cleared as follows after a fault has been rectified:

- Press start button and call up the eliminated fault, then press start button for at least 6 – 8 seconds.

Note
Each pulse displayed must be cleared individually.

- No display: Stored fault has been cleared.
- Number displayed (> 1): further faults in system.

a) Connection diagram for pulse meter

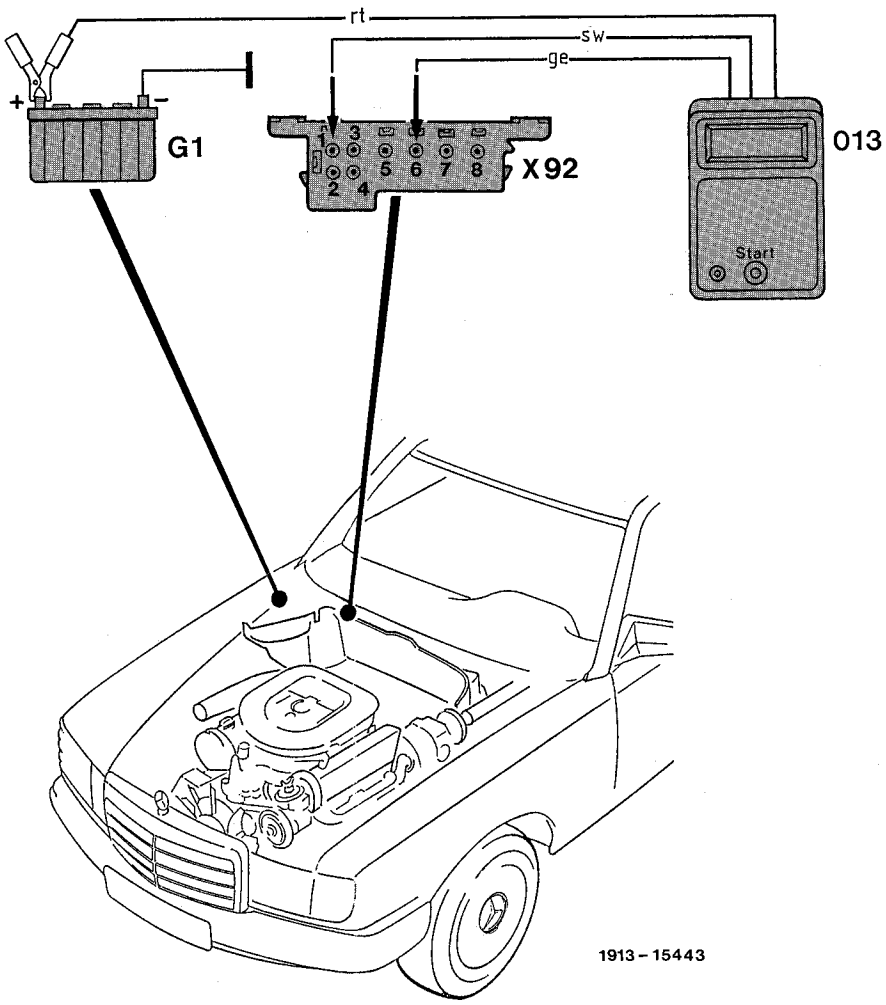

013 Pulse meter
G1 Battery
X92 Test coupling for diagnosis, 8-pin, flashing code

The number of pulses indicates whether there is a fault and which fault is present, or which component is faulty.

Pulse display 10 signifies that the control unit has activated the output stages of the airbag. This pulse display cannot be cleared.
The control unit must be renewed.

Pulse display	Fault
1	No fault stored
2	Control unit
3	Triggering circuit, driver's airbag
4	Triggering circuit, passenger's airbag
5	Driver's belt buckle
6	Passenger's belt buckle
7	Resistance, passenger's seat, airbag
8	Low voltage
9	Warning lamp
10	Control unit

b) Connection diagram for socket box

Note

The negative terminal of the battery must be disconnected and covered before disconnecting the test coupling/plug connection for airbag, 10-pin.

Connection diagram for socket box

01 Test coupling/plug connection, airbag, 10-pin
02 Test cable
03 Multimeter
04 Socket box

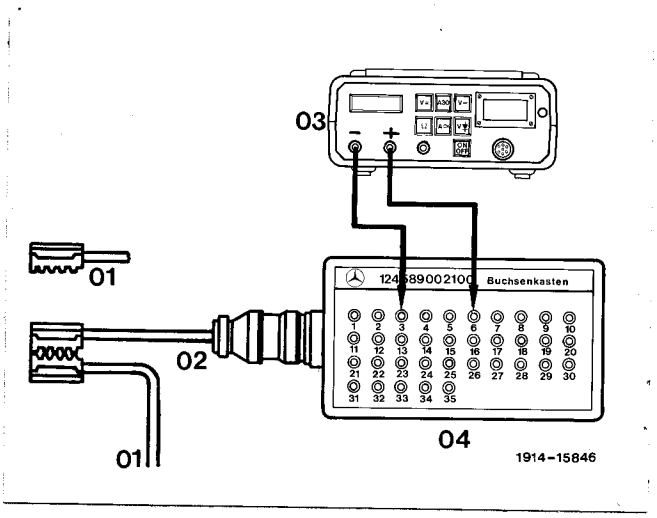

C. Test program with socket box and multimeter

Symbols for testers:

Socket box

Battery

Multimeter

Display	Test step/ scope of test	Tester/ test connection	Operation/ requirement	Reference value	Possible cause/remedy
1	1	–	–	–	No fault stored
2	Control unit		Ignition: ON Clear pulse display 2.	Pulse display 2 cleared	–
			Pulse display 2 cannot be cleared Ignition: OFF Disconnect battery -ve terminal, cover; disconnect test coupling (X29/9).		Renew control unit
3 [1])	Driver's airbag Collector ring Cables as far as (X29/9)	 3 5	Ignition: OFF Disconnect battery -ve terminal and cover.	2 – 5 Ω	Airbag unit, 4 carbon contacts, collector ring, cables (open circuit, short circuit)
		 ⊥ 5	Disconnect test coupling (X29/9) and connect test cable, turn steering wheel to full lock left and right.	∞ Ω	Short to ground

[1]) If test with pulse display 3 is in order but pulse display cannot be cleared, continue by testing cables in accordance with section "C/a".

Display	Test step/ scope of test	Tester/ test connection	Operation/ requirement	Reference value	Possible cause/remedy
4 [1])	Passenger's airbag	6 — 7	Ignition: OFF Disconnect battery -ve terminal and cover.	2 – 5 Ω	Passenger's airbag Cables
		⊥ — 6	Disconnect test coupling (X29/9) and connect test cable	∞ Ω	Cables
		6 — 8		2 – 5 Ω	Passenger's airbag Cables
5	Driver's belt buckle	S68/3x 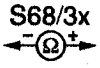 1 — 2	Disconnect plug connection (S68/3x). Belt buckle **not** inserted.	400 ± 10 Ω	Belt buckle
			Inserted	100 ± 10 Ω	
	Cables	⊥ S68/3x 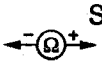 ⊥ — 2	Disconnect plug connection (S68/3x).	< 1 Ω	Open circuit in cable
	Cables	S68/3 ← x N2/2 1 — 10	Ignition: OFF Disconnect battery -ve terminal and cover. Disconnect test coupling (X29/9). Disconnect plug connection from control unit.	< 1 Ω	Open circuit in cable
	Cables	⊥ S68/3x 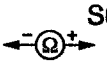 ⊥ — 1		∞ Ω	Short to ground

[1]) If test for pulse display 4 is in order but pulse display cannot be cleared, continue by testing cables in accordance with section "C/b".

Dis-play	Test step/ scope of test	Tester/ test connection	Operation/ requirement	Reference value	Possible cause/remedy
6	Passenger's belt buckle	S68/4x 1 — Ω — 2	Disconenct plug connection (S68/4x).		Belt buckle
			Belt buckle **not** inserted.	400 ± 10 Ω	
			Belt buckle inserted.	100 ± 10 Ω	
	Cables	⊥ S68/4x ⊥ Ω 2	Disconnect plug connection (S68/4x).	< 1 Ω	Open circuit in cable
	Cables	S68/4x N2/2 1 Ω 11	Ignition: OFF Disconnect battery -ve terminal and cover. Disconnect test coupling (X29/9). Disconnect plug connection from control unit.	< 1 Ω	Open circuit in cable
	Cables	⊥ S68/4x ⊥ Ω 1		∞ Ω	Short to ground

Dis-play	Test step/ scope of test	Tester/ test connection	Operation/ requirement	Reference value	Possible cause/remedy
7	Resistance, passenger's seat, airbag	N2/2 12 —(-Ω+)— 15	Ignition: OFF Disconnect battery -ve terminal and cover. Disconnect test coupling (X29/9). Disconnect plug connection from control unit.	100 Ω ± 10	Open circuit
8	Supply voltage	⊥ (X29/9) (-V+) ⊥ — 2	Ignition: OFF Disconnect battery -ve terminal and cover. Disconnect test coupling (X29/9). Ignition: ON	11 – 14 V	Check battery, alternator, ignition starter switch X28/2, and cable from X28/2 to N2/2 as per wiring diagram. **Note** To test the cable: Ignition: OFF Disconnect battery -ve terminal and cover. Disconnect test coupling (X29/9). Disconnect plug connection from control unit.

Dis-play	Test step/ scope of test	Tester/ test connetion	Operation/ requirement	Reference value	Possible cause/remedy
9	Warning lamp		Ignition: ON	Warning lamp lights up	Warning lamp
	Supply voltage	A1e15 pink pink/yellow black/red	Ignition: ON	11 – 14 V	Warning lamp Check cables from A1e15 to N2/2 and X28/2 or to fuse box as per wiring diagram, for open circuit, short circuit and short to positive. **Note** To test the cable: Ignition: OFF Disconnect battery -ve terminal and cover. Disconnect test coupling (X29/9). Disconnect plug connection from control unit.
10	Control unit	–	Ignition: OFF Disconnect battery -ve terminal and cover. Diconnect test coupling (X29/9).	–	Renew control unit.

a) Testing cables if pulse display 3 appears

Display	Test step/ scope of test	Tester/ test connection	Operation/ requirement	Reference value	Possible cause/remedy
3	Check cables between X29/9 and N2/2 for open circuit	X29/9 N2/2 5 — 2	Ignition: OFF Disconnect battery -ve terminal and cover.	< 1 Ω	Open circuit
		X29/9 N2/2 3 — 6	Disconnect test coupling (X29/9). Disconnect plug connection from control unit.	< 1 Ω	Open circuit
	Check cables between X29/9 and N2/2 for short circuit	X29/9 5 — 3		∞ Ω	Short circuit
	Check cables between X29/9 and N2/2 for short to ground	⊥ X29/9 ⊥ — 5		∞ Ω	Short to ground
		⊥ X29/9 ⊥ — 3		∞ Ω	Short to ground
	Check cables of X29/9 for short to positive	X29/9 5 — +		∞ Ω	Short to positive
		X29/9 3 — +		∞ Ω	Short to positive

b) Testing cables if pulse display 4 appears

Display	Test step/ scope of test	Tester/ test connection	Operation/ requirement	Reference value	Possible cause/remedy
4	Cables between X29/9 and X29/9	X29/9 5 — 6	Ignition: OFF Disconnect battery -ve terminal and cover. Disconnect test coupling (X29/9). Disconnect plug connection from control unit.	< 1 Ω	Open circuit
	Check cables between X29/9 and N2/2 for open circuit	X29/9 N2/2 5 — 2 8 — 13 7 — 14		< 1 Ω	Open circuit
	Check cables between X29/9 and N2/2 for short circuit	X29/9 5 — 7 5 — 8 7 — 8		∞ Ω	Short circuit
	Check cables between ⊥ and X29/9 for short to ground	⊥ X29/9 ⊥ — 5 ⊥ — 7 ⊥ — 8		∞ Ω	Short to ground
	Check cables from X29/9 for short to positive	X29/9 5 — + 7 — + 8 — +		∞ Ω	Short to positive

c) Testing electrical function of belt tensioners

The belt tensioners are not tested by the airbag control unit. For this reason, the belt tensioners must be tested as follows when working on the airbag restraint system:

Symbols for testers:

Socket box

Multimeter

Test program with socket box

Display	Test step/ scope of test	Tester/ test connection	Operation/ requirement	Reference value	Possible cause/remedy
Is not recorded by pulse display	Driver's belt tensioner	4 9	Ignition: OFF Disconnect battery -ve terminal and cover.	2 – 5 Ω	Belt tensioner, cables
		⊥ 4	Disconnect test coupling (X29/9) and connect test cable	∞ Ω	Short to ground
	Passenger's belt tensioner	4 10		2 – 5 Ω	Belt tensioner, cables

d) Testing if no pulse display appears

Test condition

- Test coupling/plug connection for airbag (X29/9) contacted.
- Battery voltage 11 – 14 V
- Pulse meter connected in accordance with connection diagram
  (—‹ 1 black cable, —‹ 6 yellow cable).
- Ignition switched on
- Start button on pulse meter pressed for 2 – 4 s.

Special tools

201 589 00 99 00

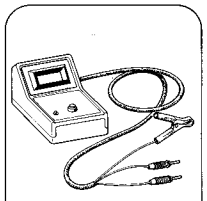

124 589 19 21 00

Conventional tester

Multimeter	e.g. Sun, DMM-5 or Avometer 2003

Testing

1 Check that socket 6 is correctly clamped in the 8-pin test coupling for diagnosis (X92).

2 Check cables in accordance with test program using multimeter and electrical connection set.

Test program

Symbol for tester:
Multimeter

Dis-play	Test step/ scope of test	Tester/ test connection	Operation/ requirement	Reference value	Possible cause/remedy
	Cable between ⊥ and X92 for open circuit	⊥ — X92 ⊥ — 1	Ignition: OFF	< 1 Ω	Open circuit in cable
	Cable between X92 and N2/2 for open circuit	X92 — N2/2 6 — 3	Ignition: OFF Disconnect battery -ve terminal and cover. Disconnect test coupling X29/9. Disconnect plug connection from control unit (N2/2)	< 1 Ω	Open circuit in cable
	Check cable between ⊥ and X92 for short to ground	⊥ — X92 ⊥ — 6		∞ Ω	Short to ground

Remedy:
If all values in the table are in order, the control unit must be renewed.

D. Wiring diagrams

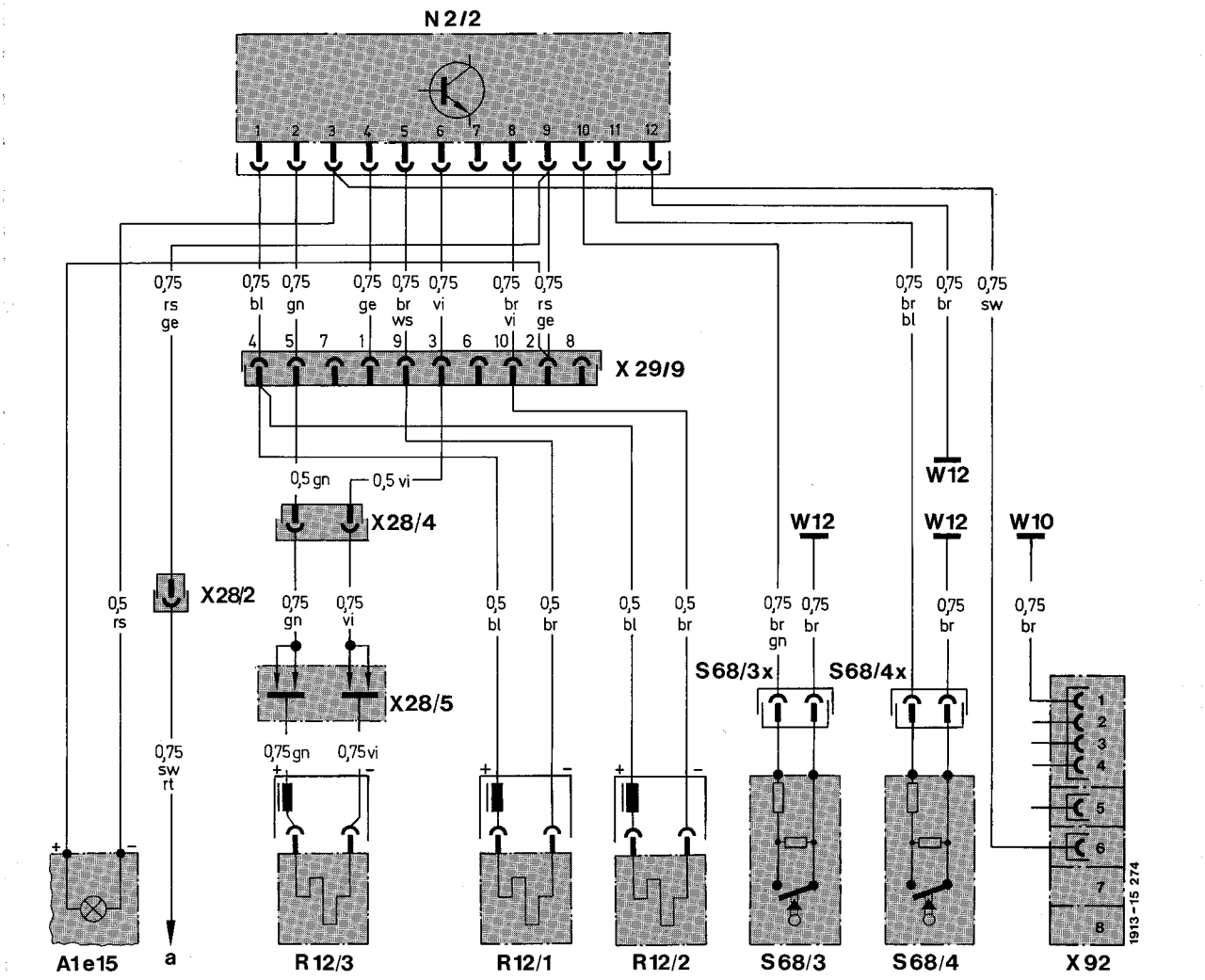

Electrical wiring diagram for driver's airbag with belt tensioners (as of 09/87)

A1e15	RS warning lamp (airbag)
N2/2	Control unit, belt tensioner with airbag
R12/1	Detonator, belt tensioner, front left
R12/2	Detonator, belt tensioner, front right
R12/3	Detonator, airbag
S68/3	Belt buckle switch, airbag/belt tensioner, driver
S68/3x	Plug connection, belt buckle switch, airbag/belt tensioner, driver
S68/4	Belt buckle switch, airbag/belt tensioner, passenger
S68/4x	Plug connection, belt buckle switch, airbag/belt tensioner, passenger
W10	Ground, battery
W12	Ground, center console
X28/2	Plug connection, power supply for airbag with belt tensioner
X28/4	Plug connection, airbag/detonator
X28/5	Collector ring, detonator, airbag, 2-pin
X29/9	Test coupling/plug connection, airbag, 10-pin
X92/1	Test coupling for diagnosis, 8-pin (flashing code), ground (socket 1, 4-pin)
X92/6	Flashing code, airbag (socket 6, 1-pin)
a	Fuse box, terminal 15 R, unfused side

All pins in the plug are short-circuited when the 10-pin test coupling/plug connection for airbag is disconnected. When the connection for the belt tensioner detonators (R12/1, R12/2) and the airbag detonator (R12/3) is disconnected, the detonators are short-circuited.

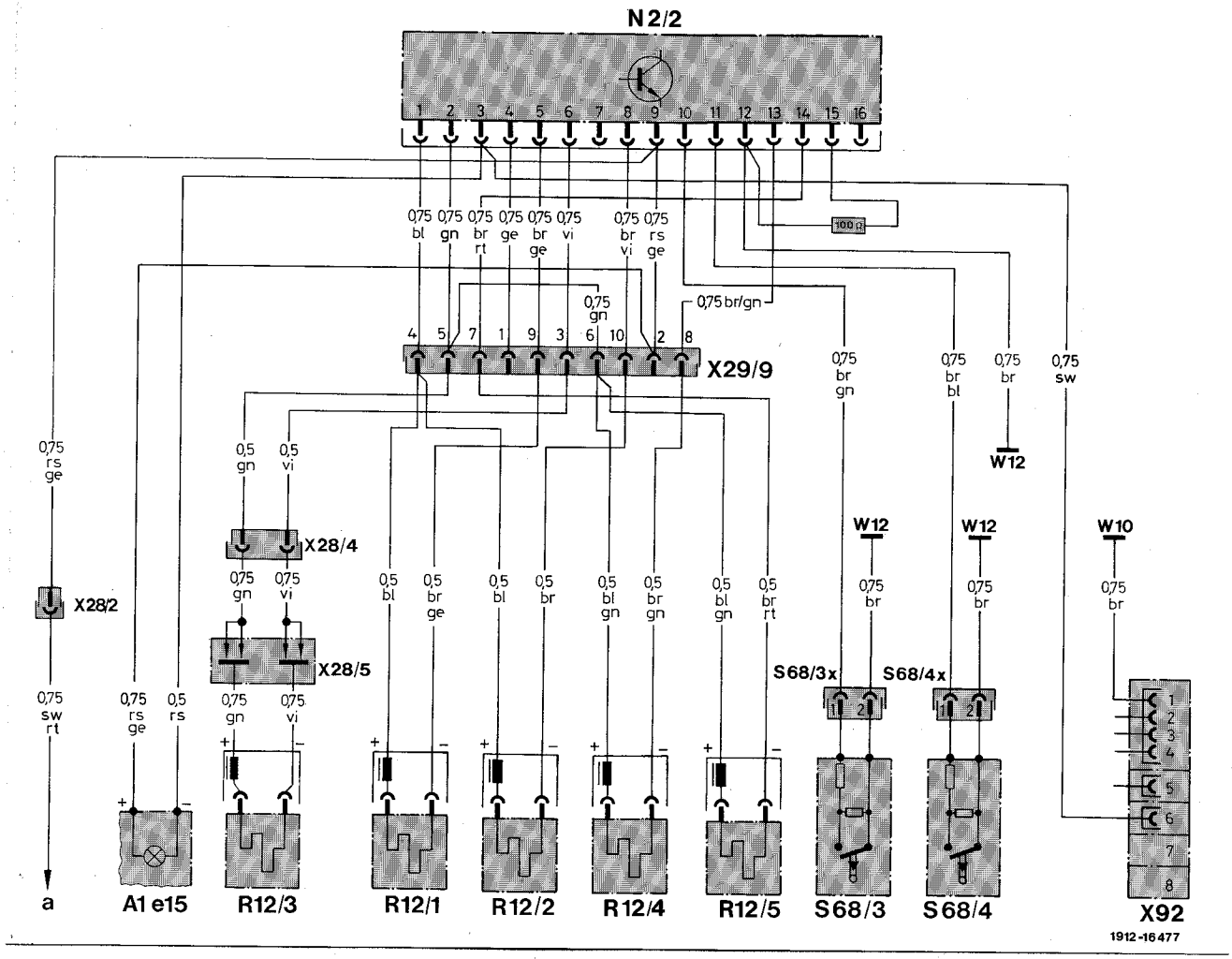

Electrical wiring diagram for driver's and passenger's airbag with belt tensioners (as of 09/88)

A1e15	SRS warning lamp (airbag)
N2/2	Control unit, belt tensioner with airbag
R12/1	Detonator, belt tensioner, front left
R12/2	Detonator, belt tensioner, front right
R12/3	Detonator, driver's airbag
R12/4	Detonator 1, passenger's airbag
R12/5	Detonator 2, passenger's airbag
S68/3	Belt buckle switch, airbag/belt tensioner, driver
S68/3x	Plug connection, belt buckle switch, airbag/belt tensioner, driver
S68/4	Belt buckle switch, airbag/belt tensioner, passenger
S68/4x	Plug connection, belt buckle switch, airbag/belt tensioner, passenger
W10	Ground, battery
W12	Ground center console
X28/2	Plug connection, power supply, airbag with belt tensioner
X28/4	Plug connection, airbag/detonator
X28/5	Collector ring, detonator, airbag, 2-pin
X29/9	Test coupling/plug connection, airbag, 10-pin
X92	Test coupling for diagnosis, 8-pin (flashing code)
a	Fuse box, terminal 15 R, unfused side

Note

Eight plug pins are short-circuited when the test coupling/plug connection (X29/9) for airbag, 10-pin, is disconnected. When the connection for the belt tensioner detonators (R12/1, R12/2) and the airbag detonators (R12/3, R12/4, R12/5) is disconnected, the detonators are short-circuited.

E. Arrangement of components

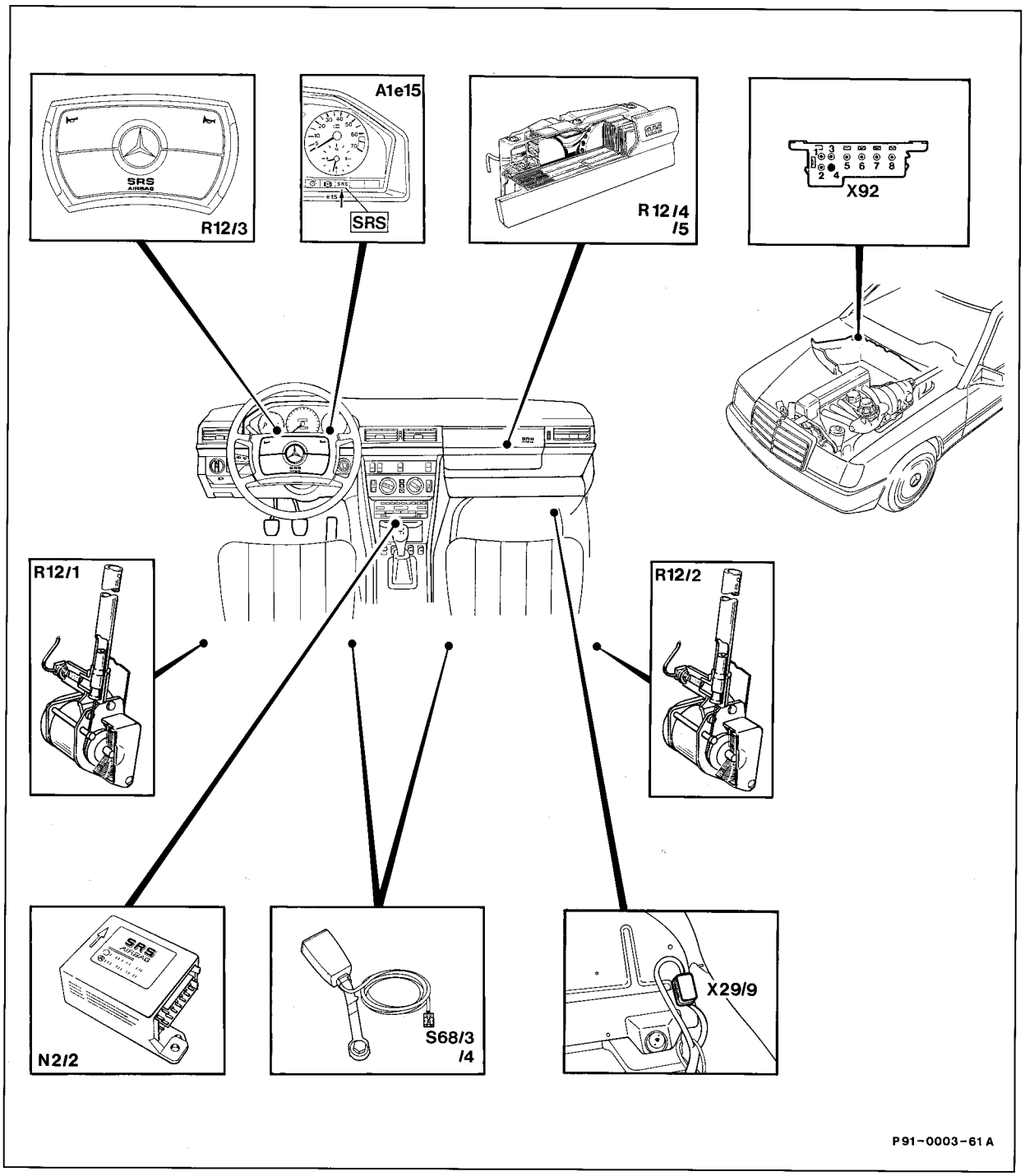

A1e15	RS/SRS warning lamp, airbag
N2/2	Control unit, belt tensioner with airbag
R12/1	Detonator, belt tensioner, front left
R12/2	Detonator, belt tensioner, front right
R12/3	Detonator, airbag
R12/4	Detonator 1, airbag (passenger)
R12/5	Detonator 2, airbag (passenger)
S68/3	Switch, belt buckle/airbag, belt tensioner, driver
S68/4	Switch, belt buckle/airbag, belt tensioner, passenger
X29/9	Test coupling/plug connection, airbag, 10-pin
X92	Test coupling for diagnosis, 8-pin (flashing code)

F. Arrangement of plug connections

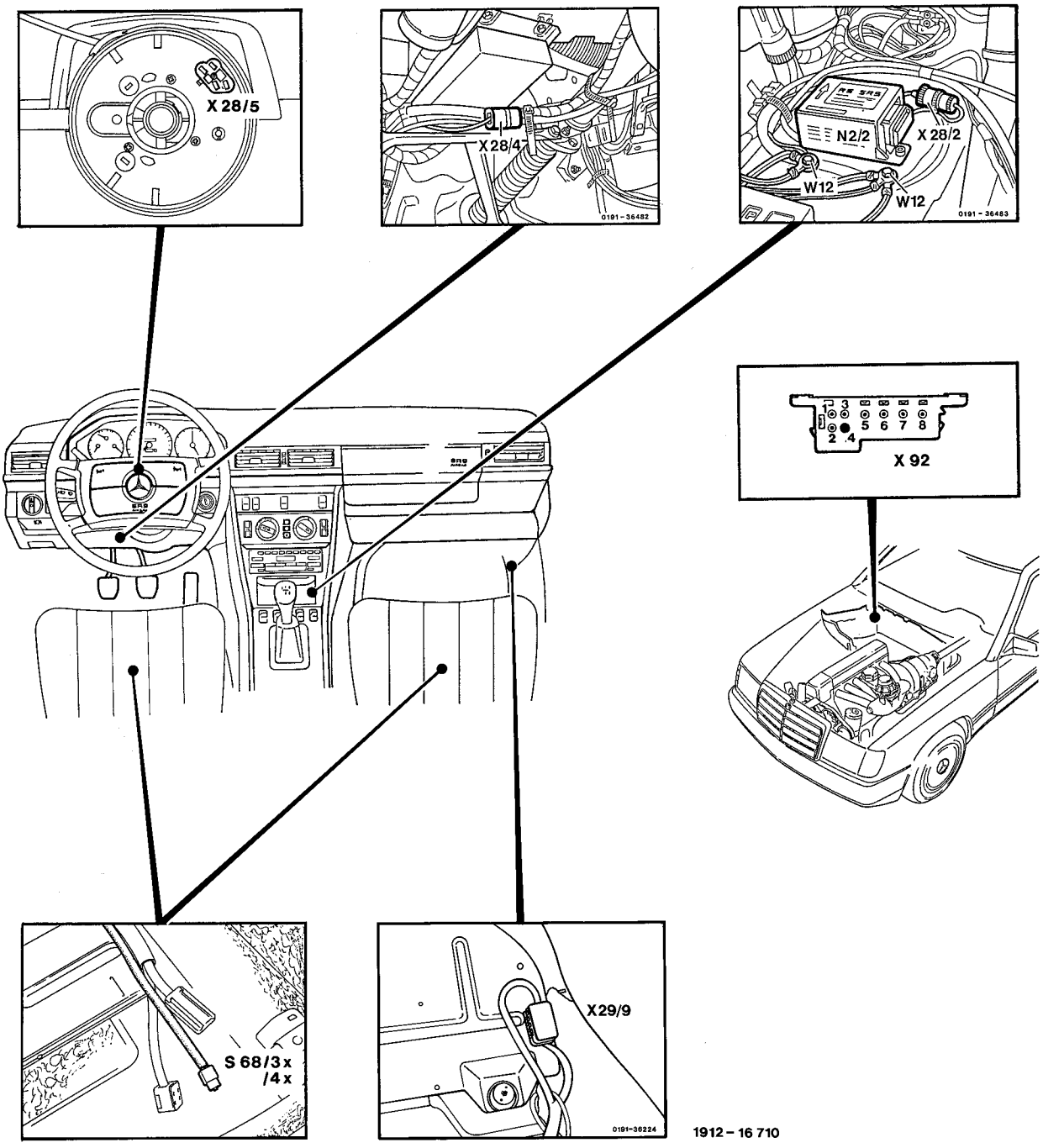

1912 – 16 710

S68/3x	Plug connection, belt buckle switch, airbag/belt tensioner, driver
S68/4x	Plug connection, belt buckle switch, airbag/belt tensioner, passenger
X28/2	Plug connection, power supply, airbag with belt tensioner
X28/4	Plug connection, airbag/detonator
X28/5	Collector ring, detonator, airbag, 2-pin
X29/9	Test coupling/plug connection, airbag, 10-pin
X92	Test coupling for diagnosis, 8-pin (flashing code)

91-750 Test program for belt tensioner (without airbag)

Special tool

201 589 00 99 00

Testers

Digital pocket multimeter	e.g. Hermann Avometer 2003 e.g. Fluke, 23
Multimeter	e.g. Sun, DMM-5

The following tests for triggering or function must be performed:

a) Following an accident with visible deformation to
the guide rail
the belt retractor
the belt buckle

b) After removing a belt tensioner

c) After installing optional equipment requested by the customer, which may influence the function of the belt tensioner system either mechanically or electrically.

The test program is divided into:

A. Mechanical function
B. Electrical function

A. Mechanical function

Testing the belt tensioners for triggering (center pillar covering or belt tensioner removed).

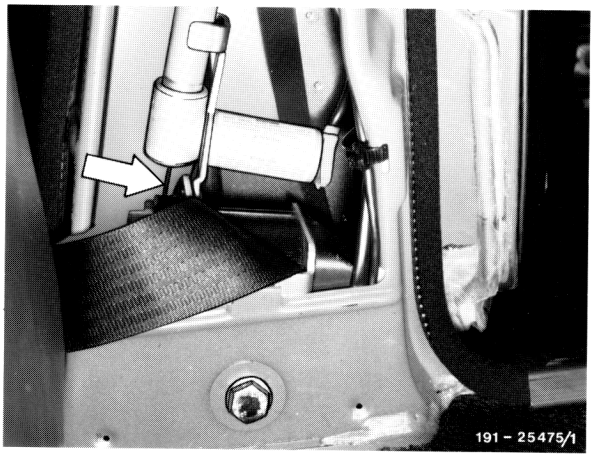

Cable tensioner (1st version, 2nd version)
Check whether the colored mark on the cable (green or yellow) is still visible. If the colored mark is still visible, the belt tensioner has not been triggered. If no colored mark can be seen, the belt tensioner has been triggered and must be renewed.

2 When the series was introduced, some vehicles were built with no colored mark on the cable of the belt tensioner. These must be tested as follows:

Remove protective rubber cap on end of tube and measure distance "X".

To do this, insert a round implement or screwdriver of approx. 10 mm diameter and measure the depth.

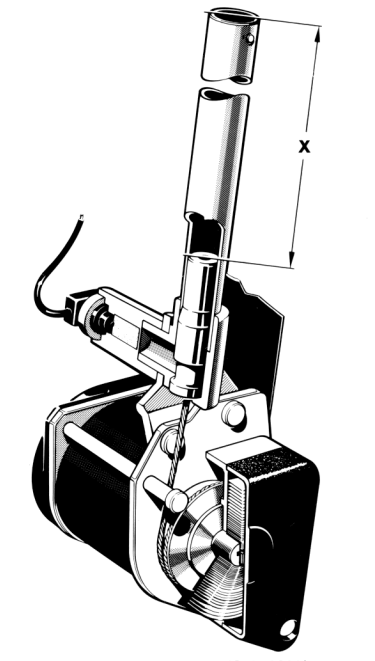

Model	Distance "X"
124	170 mm ± 5 mm

If the measured distance is shorter than the distance given in the table, the belt tensioner has been triggered and must be renewed.

As of 01/86, there is an observation window in the housing of the belt tensioner, through which the cable is visible.

This means that it is no longer necessary to remove the belt tensioner for the test.

Belt tensioners where no cable is visible have been triggered and must be renewed.

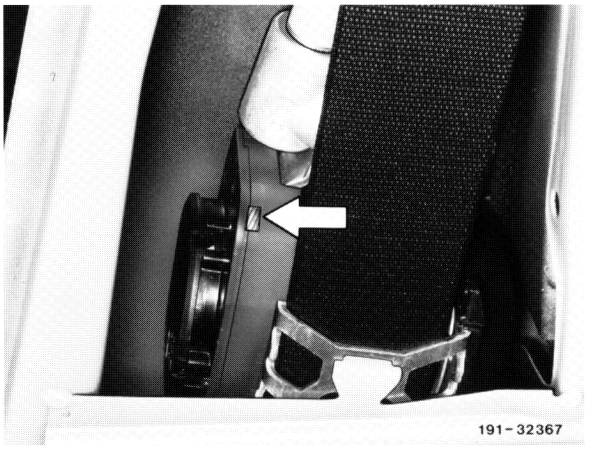

As of 08/87 belt tensioners are supplied by two manufacturers.

There is also an observation window on the housing of Autoflug belt tensioners, through which **2 cables** are visible. **Autoflug** belt tensioners where **only 1 cable or no cable** is visible, have been triggered and must be renewed.
Autoflug belt tensioners have always been equipped with an approx. 80 mm shorter tube than the Repa belt tensioners.
Repa belt tensioners also incorporate this shorter version of tube as of 01/88.

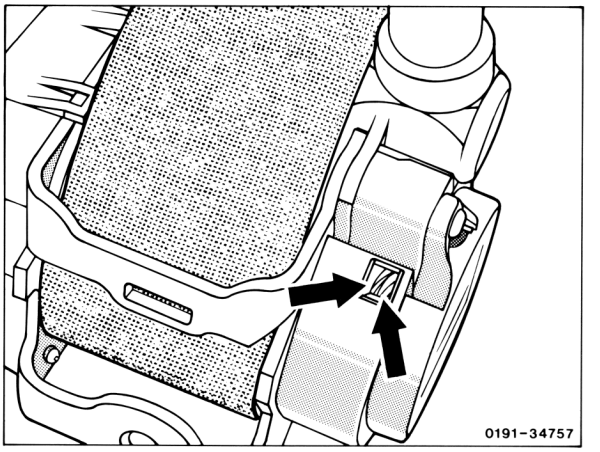

B. Electrical function

Testing the triggering circuit of the detonators:

1 Disconnect negative terminal of battery and cover.

2 Connect multimeter to the 4-pin test coupling (X29) (2 pins used).

Note
The test coupling (X29) is connected in parallel with the detonators.

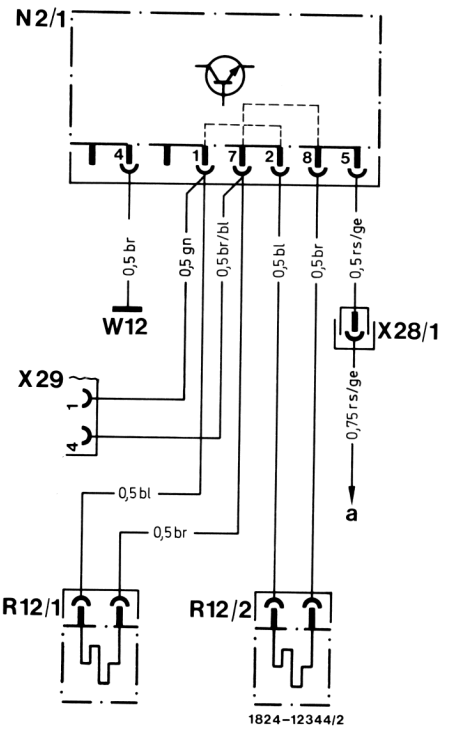

Wiring diagram for belt tensioner

N2/1	Control unit, belt tensioner
R12/1	Detonator, belt tensioner, front left
R12/2	Detonator, belt tensioner, front right
X28/1	Plug connection, power supply, belt tensioner
X29	Test coupling, belt tensioner
W12	Main ground point, center console
a	To fuse box, terminal 15 R

Location of test coupling X29 in the vehicle
Model 124, 1st version
Under the foot rest in the passenger's footwell.

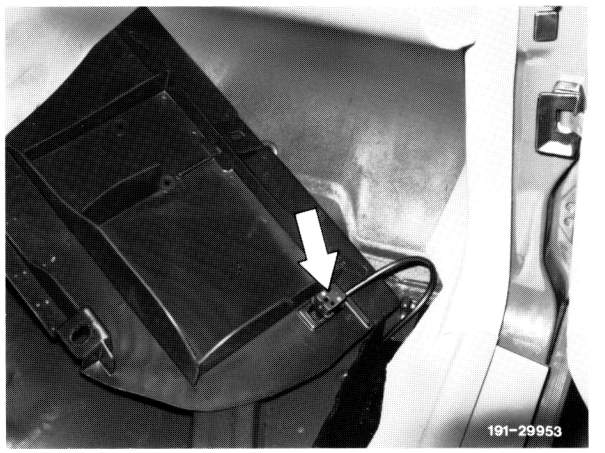

Model 124, 2nd version
On the plate situated under the foot rest in the passenger's footwell.

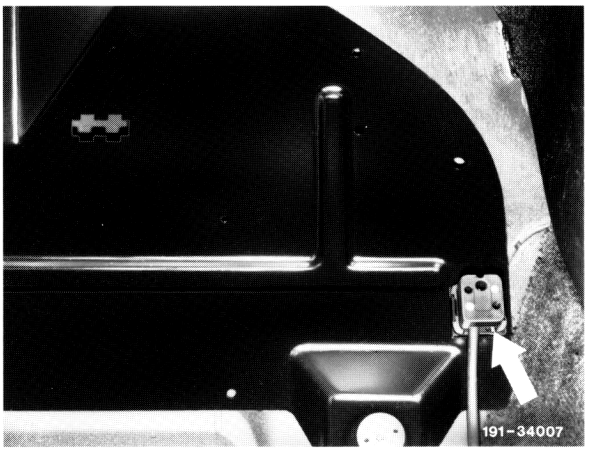

Measure insulation resistance at both occupied poles of the 4-pin test coupling (X29) to ground.
Reference value: ≥ 20 kΩ EEE ∞

Reference value correct	Reference value incorrect

Check cable harness for damage and renew if necessary.

Measure resistance of detonators.
Reference value: 1.0–1.7 Ω

Reference value correct	Reference value incorrect

End of test

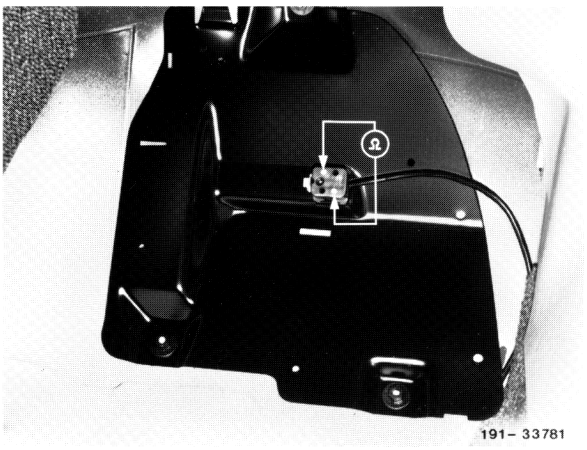

Check detonator and belt tensioner cable harness on the left-hand side.
Remove panelling for right-hand center pillar.
Disconnect electrical connection for right-hand belt tensioner detonator (R12/2).
Measure resistance at test coupling (X29).
Reference value: (with only 1 detonator)
2.0–6.0 Ω

Reference value correct	Reference value incorrect

Check cable harness for open circuit.
Remove panelling on left-hand center pillar.
Disconnect electrical connection for left-hand belt tensioner detonator (R12/1) and bridge contacts.
Measure resistance at test coupling (X29).
Reference value: < 1 Ω

Reference value correct	Reference value incorrect

Renew cable harness

Renew left-hand belt tensioner unit

Reconnect left-hand (R12/1) and right-hand (R12/2) belt tensioner detonators and measure resistance of detonators at test coupling (X29).

Reference value: (with parallel circuit)
1.0 –1.7 Ω

End of test

Reconnect right-hand belt tensioner detonator (R12/2).

Check right-hand detonator and belt tensioner cable harness.
Remove panelling on left-hand center pillar.
Disconnect electrical connection for left-hand belt tensioner detonator (R12/1).
Measure resistance at test coupling (X29).
Reference value: (with only 1 detonator) approx. 2.0–6.0 Ω

Reference value correct	Reference value incorrect

Check cable harness for open circuit.
Disconnect electrical connection for right-hand belt tensioner detonator (R12/2) and bridge contacts.
Measure resistance at test coupling (X29).
Reference value: < 1 Ω

Reference value correct	Reference value incorrect

Renew cable harness

Renew right-hand belt tensioner unit

Reconnect both left-hand (R12/1) and right-hand belt tensioner detonators (R12/2) and measure resistance of detonators at test coupling (X29).

Reference value: (with parallel circuit)
1.0–1.7 Ω

↓

End of test

Note
If the vehicle is severely damaged, the control unit (N2/1) on the transmission tunnel must be checked for visible deformation or damage to the housing. Control units with damaged housings must be renewed.

Complaint:

Noise in the airbag unit on the steering wheel.

Cause/remedy:

Axial play at the retaining bolts (75) of contact bridges (57) or radial play in triangular springs.

Move airbag unit (cushioned panel) on the steering wheel back and forth in a diagonal direction to localize the axial play.

Unscrew airbag unit from steering wheel. Observe safety regulations.

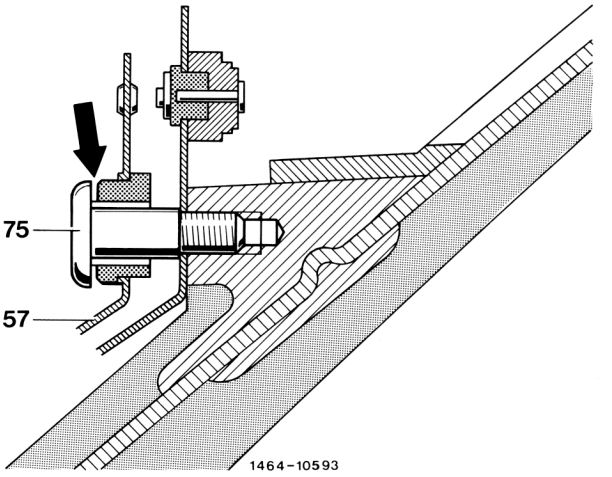

Steering wheel, 1st version
There is a positioning wheel on the right-hand contact bridge to eliminate axial play.

Example
If play is at bottom left or top right, turn positioning wheel (80) to the left using a suitable tool until the play is eliminated.

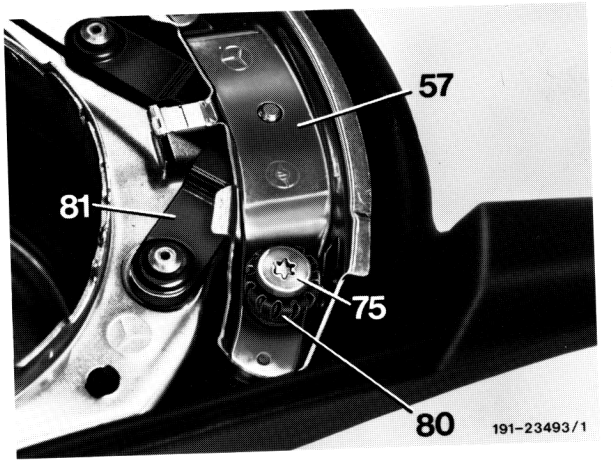

⚠

The airbag unit need not be removed for this. There is a channel molded into the foam covering of the steering wheel in the region of the positioning wheel to receive the adjusting tool (see arrow).

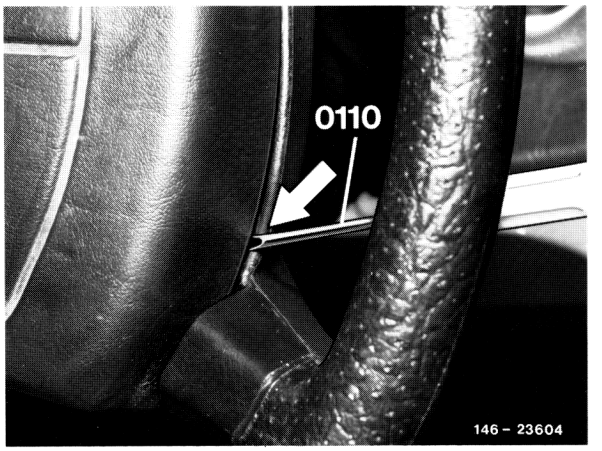

Steering wheel, 2nd version (standard as of 12/85)
Slacken oval-head torx socket bolts and align airbag unit on steering wheel so that it is correctly seated. Screw in both torx socket bolts a few threads. Then first tighten left-hand torx socket bolt to the prescribed tightening torque. Gently pull right-hand side of airbag unit from steering wheel and tighten torx socket bolt to the prescribed tightening torque.

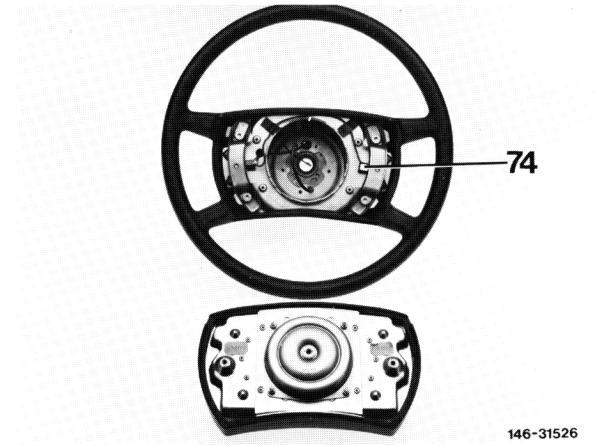

Complaint:

RS or SRS warning lamp flickers, lights up intermittently or shines constantly.

Cause/remedy:

1 Film of grease on collector ring in steering wheel. Clean collector ring thoroughly (behind the tracks as well). Wash down with cleaning benzine, blast with air and rub dry using a fuzz-free cloth; install new collector ring if necessary.

2 "Cold soldering point" on cable harness.
Check cable harness using tester or with socket box and multimeter (as of 09/87) whilst moving cable harness plug connection. Test values must remain constant.
Resolder cable correctly.

3 Plug sleeves of plug connections stretched producing insufficient contact with relevant components.
Move 10-pin plug connection (X29/9) during the test cycle (10 s or 4 s as of 09/87) of the RS or SRS warning lamp (A1e15). Warning lamp must not light up. Connect tester or socket box and multimeter (as of 09/87) and move plug connections.
Test values must remain constant.
Renew plug sleeves.

4 Bolts on positive or negative connections of airbag cable harness loose.
Tighten bolts.

5 Insufficient press-on force of carbon contacts.
Check smoothness of carbon contacts.
Renew carbon contacts.

6 Voltage transformer (N24) faulty (only in vehicles up to 09/87).
Disconnect voltage transformer connection (built-in fault detection). If warning lamp goes out renew voltage transformer.
For test step 2, the test value must remain constant for at least 30 s.
Renew voltage transformer.

7 Reserve power source (C1) faulty (only in vehicles up to 09/87).
Check reserve power source using tester (reference value). Renew reserve power source.

8 Control unit (N2/2) faulty.
Connect control unit and check airbag and belt tensioner system by means of RS or SRS warning lamp. Renew control unit.

9 Airbag unit or belt tensioner unit triggered.
Renew parts.

The following points only apply for vehicles as of 09/87.

10 If pulse display 10 appears (airbag not triggered).
Renew control unit and attach additional ground-cable shoe from airbag cable harness to lowest point.

11 Check cable to test coupling for diagnosis, 8-pin (X92), socket 6, for short to ground.
Renew cable.

12 Plug connection for driver's or passenger's belt buckle not connected.

Contact plug connection.

13 Overvoltage. Check power supply (11–14 V).

Check battery and alternator.

14 Open circuit in cables to collector rings (X28/4 - collector rings).

Renew collector rings.

15 Intermittent or constant short to ground in cable to test coupling for diagnosis (X92), socket 6, at battery frame. Renew cable. Smooth battery frame.

16 Wrong control unit installed (airbag 1/3).
Renew control unit.

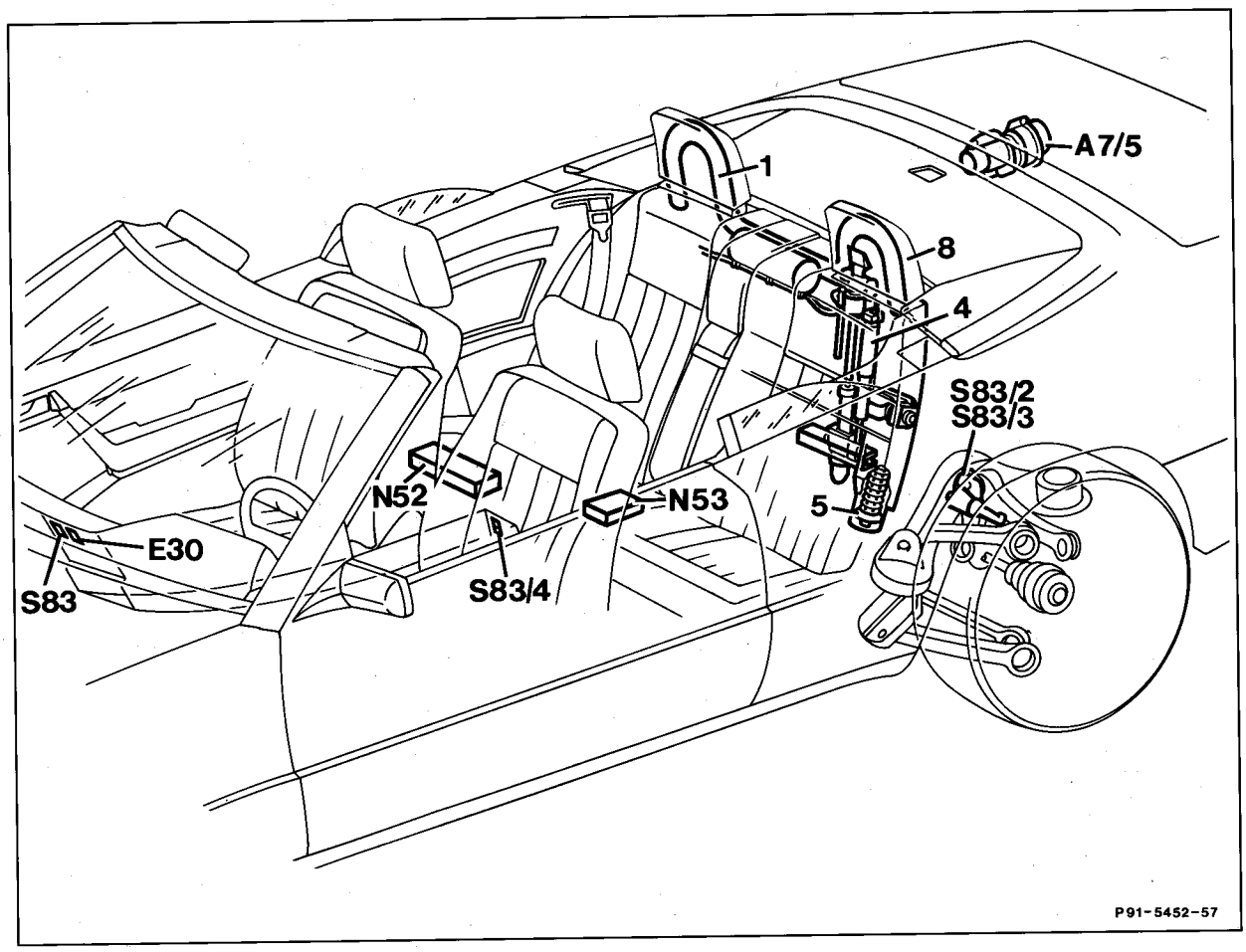

Roll-over bar system, model 124.061

A7/5	Roll-over bar (ÜRB)/soft top operation hydraulic unit	1	Roll-over bar integrated into head restraint
E30	Roll-over bar indicator lamp, center console	4	Support and actuating element
N52	Soft top control unit	5	Left and right springs (crash actuation)
N53	Roll-over bar (ÜRB) crash sensor control unit	8	Head restraint
S83	Roll-over bar (ÜRB) convenience switch		
S83/2	Left rear axle switch, roll-over bar (ÜRB)		
S83/3	Right rear axle switch, roll-over bar (ÜRB)		
S83/4	Roll-over bar switch		

A. Roll-over bar

The roll-over bar (1) consists of high tensile strength tubular steel bent in a U-shape integrated into the head restraints (8) on both sides and recessed behind the rear seats. The roll-over bar is extended during an accident or in critical situations by the roll-over bar control unit. The vehicle acceleration and vehicle inclination signals are evaluated in the processor and compared with the set values. If the processor recognizes a vehicle acceleration > 0.4 g (1 g ≈ 9.81 m/s^2) or a vehicle inclination > 22° or lateral acceleration > 0.4 g and at least one open rear axle switch, the rollover output stage is actuated (crash actuation).
The roll-over bar can also be extended manually (convenience feature) with switches in the front and rear center consoles. This is also possible with the top closed and while driving.

The roll-over bar moves along a slightly curved path guided in the vertical direction by rollers when it extends and retracts.

To prevent the roll-over bar from canting while extending or retracting, a synchronization shaft (30) is present which runs in teeth driven by a pinion on both sides.

The roll-over bar system consists primarily of the following components and assemblies:

- Roll-over bar
- Control unit
- Triggering solenoid
- Roll-over bar actuation switch (convenience feature)
- Indicator lamp
- Rear axle switches
- Support and actuating elements

- Hydraulic unit
- Roll-over bar valve block
- Soft top control unit

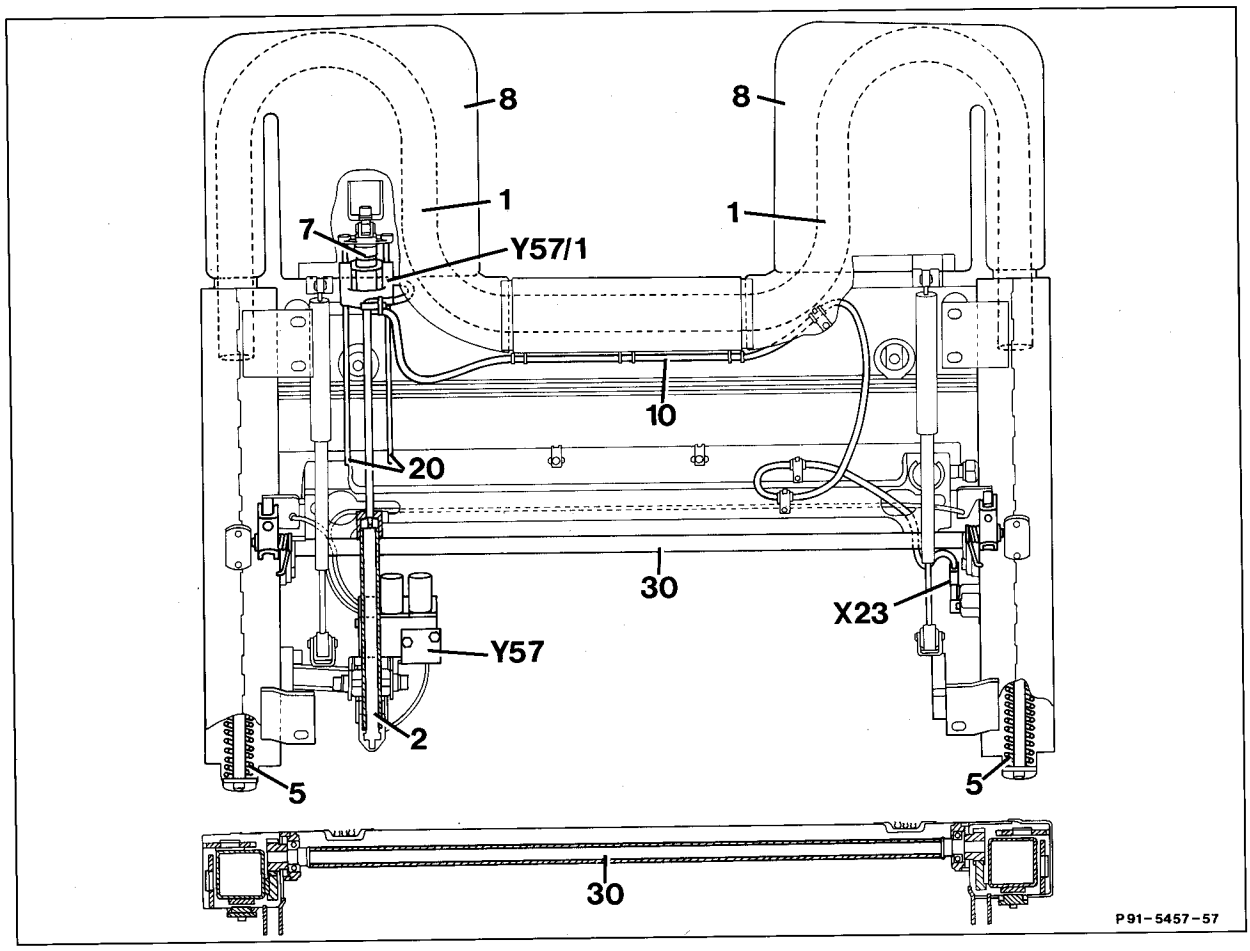

B. Control unit (N53)

The roll-over bar control unit is located on the tunnel below the rear seat.
The control unit contains two piezo-electric sensors for sensing the vehicle acceleration in the longitudinal (X) and lateral (Y) directions. A piezo-ceramic bender bar mounted in and damped by a sensor is bent by negative acceleration, e.g. accident, braking, due to its inertia of rest, producing a voltage. This voltage serves for measurement of the acceleration. Its location in the control unit corresponds to this function (90° angle).

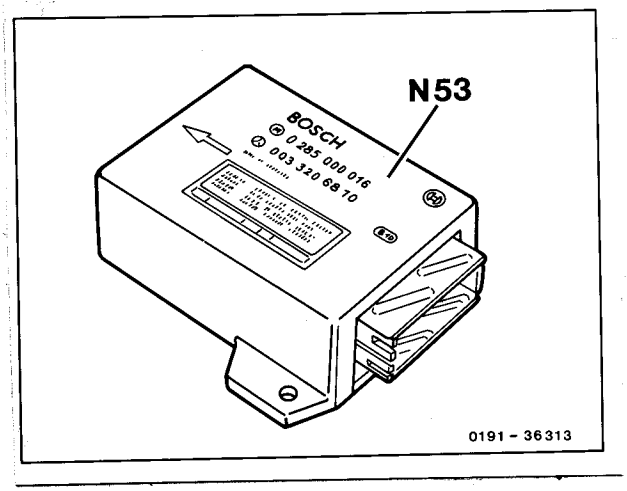

The signals from the sensor elements are mathematically processed, whereby a constant acceleration sensitivity is achieved in any desired direction in the horizontal plane. A position switch measures the vehicle inclination (all the way around).

All of the signal conversion and processing is accomplished digitally.

The electronic control unit is subdivided functionally into:

- Acceleration sensors (X and Y)
- Signal conversion stage
- Microprocessor
- Output stages
- Monitoring
- Fault memory

Signal conversion stage
In the signal conversion stage the input signals from the rear axle switches are converted into a form suitable for the processor.

Processor

The vehicle acceleration and inclination signals are evaluated in the processor and compared with the set values. If the processor recognizes a vehicle acceleration > 0.4 g or vehicle inclination > 22° or lateral acceleration > 0.4 g and at least one open rear axle switch, the roll-over bar output stage is actuated.

Output stages

When the control unit recognizes a fault the indicator light receives power from the corresponding output stage.
If the control unit recognizes an accident or critical situation, the roll-over bar output stage is actuated and the roll-over bar extended.

The roll-over bar control unit and soft top control unit are connected by a data bus (2 lines) for exchange of the following information:

- Roll-over bar okay
- Roll-over bar defective
- Vehicle acceleration > 0.4 g
- Crash actuation

The processor itself as well as all electronic components located outside are monitored. Upon recognition a fault is indicated by the indicator lamp in the center console coming on. Simultaneously two LED's in the roll-over bar switch (convenience feature) come on. This serves as a request to put up the roll-over bar.

Fault memory

The following faults are recognized and stored in a non-volatile memory (EEROM).

- Control unit defective
- Voltage too low
- Roll-over bar triggering solenoid defective
- Rear axle switch (short circuit to positive or ground)
- Indicator lamp

The stored faults can be read out via pulse readout on the test connector for diagnosis.

Block diagram, roll-over bar total function

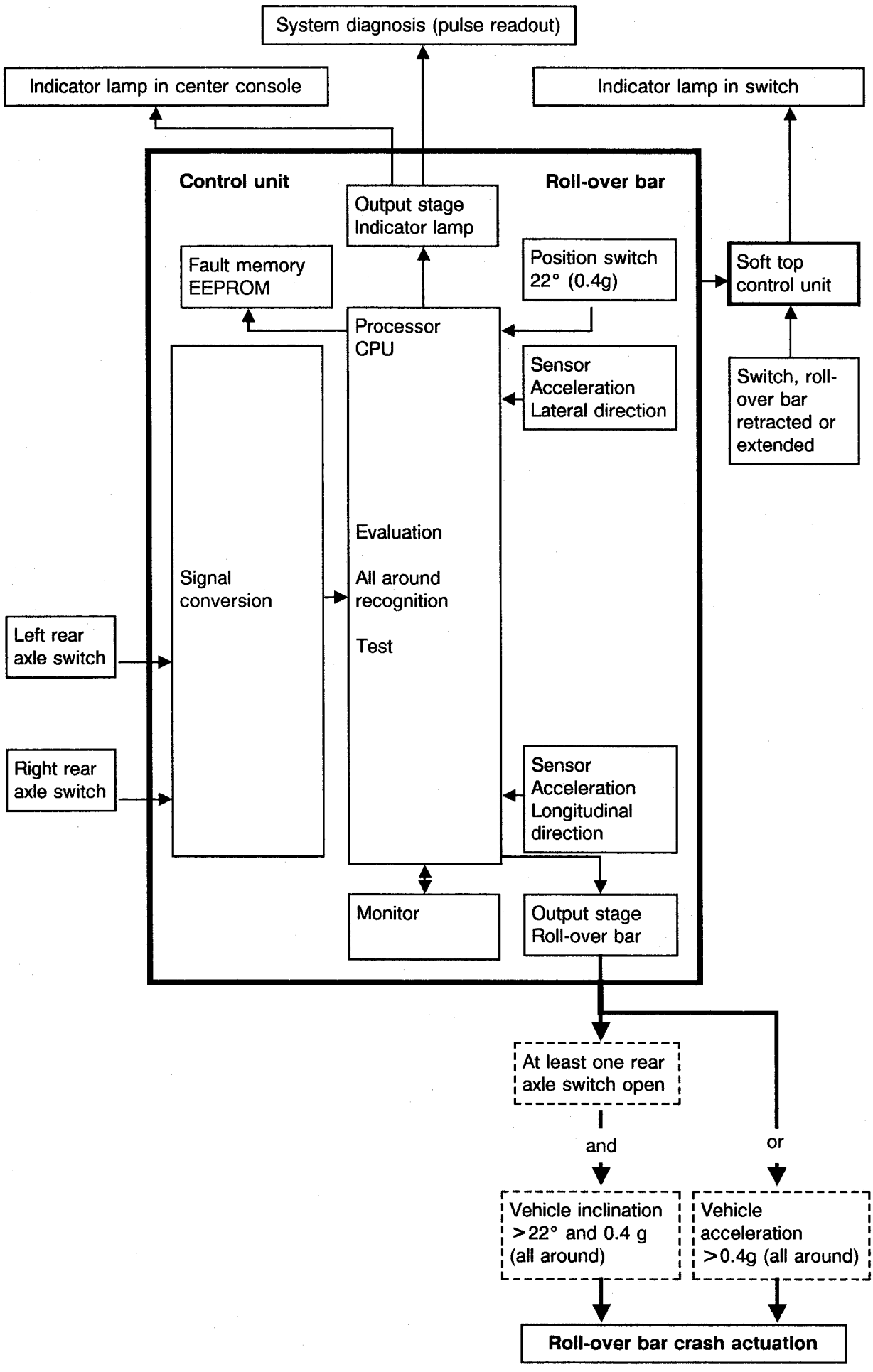

C. Roll-over bar triggering solenoid (Y57/1)

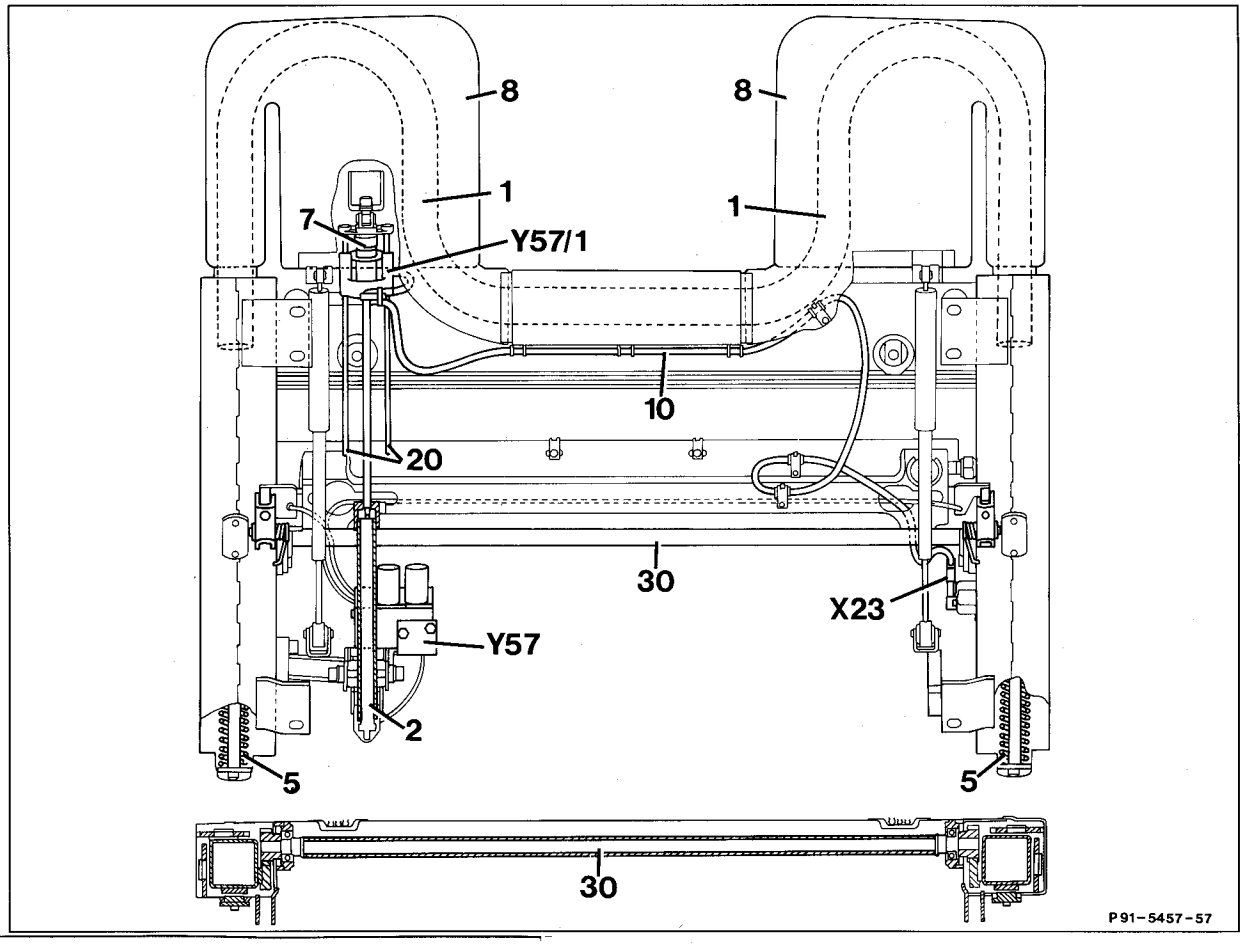

Y57/1	Roll-over bar (ÜRB) triggering solenoid
2	Support and actuating element
5	Spring (crash actuation)
7	Lock

The roll-over bar triggering solenoid (Y57/1) is located on the left support and actuating element (2). In an accident or a critical situation it is actuated by the roll-over bar control unit. This opens the lock (7), which holds the roll-over bar in the stored position. The roll-over bar is extended by pretensioned springs (5).

D. Roll-over bar convenience switch (S83), (S83/4)

The roll-over bar can also be extended and retracted while driving with the so-called convenience actuation feature with the switch (S83) or (S83/4) in the center console. This is also possible with the soft top open or closed. The convenience actuation feature is inhibited while the soft top is moving. In the event of a defect in the roll-over bar system the two LED's in the shape of two triangles pointing upward in switch (S83) or (S83/4) flash. This serves to tell the driver to extend the roll-over bar with the convenience actuation feature to ensure protection in the event of an accident or critical situation. The LED's also flash when the rollover is not completely extended or retracted.

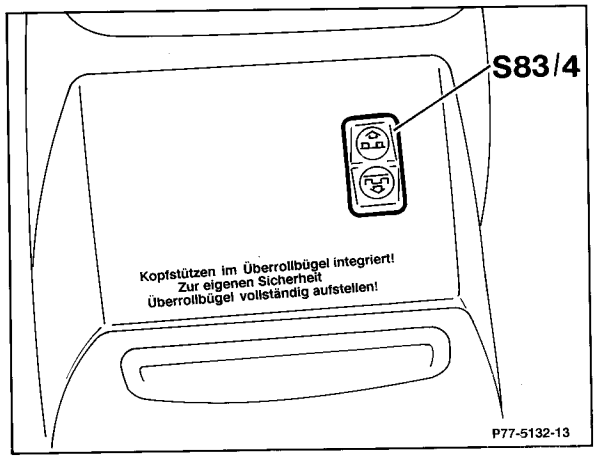

The roll-over bar is automatically retracted while the soft top is in motion to avoid a collision between the roll-over bar and soft top (roll-over bar extended). The roll-over bar is extended again after actuation of the soft top has been completed. The convenience actuations also serve for retracting the roll-over bar after a crash actuation (see control unit for crash actuation). For this purpose it is necessary to press switch (S83) or (S83/4) up in the extend direction for approx. 5 s until the lock has engaged audibly. This causes the hydraulic cylinder to move up and the lock to engage. Retraction is then possible. Switch S83/4 can be inhibited by the safety switch for the rear window lift (child safety lock).

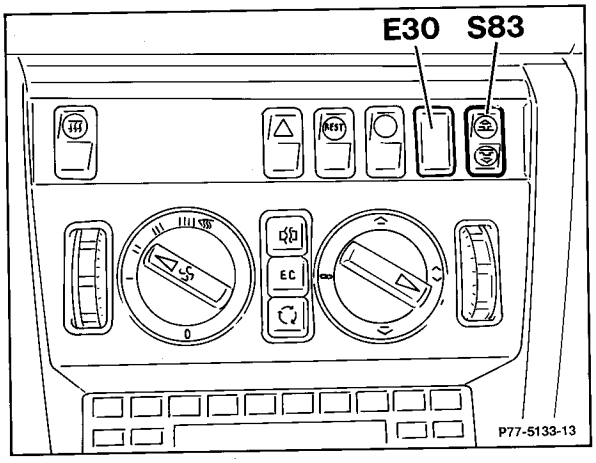

E. Roll-over bar indicator lamp (E30)

The indicator lamp (E30) is located in the center console at the top right. When the ignition/starter switch is in position two, the indicator lamp comes on and goes off again when the engine is running as long as a fault is not present.
If the indicator lamp comes on with the engine running, a fault is present. The fault can be read out via the pulse readout function.

See Diagnosis Manual, Body, Volume 2 for pulse readout.

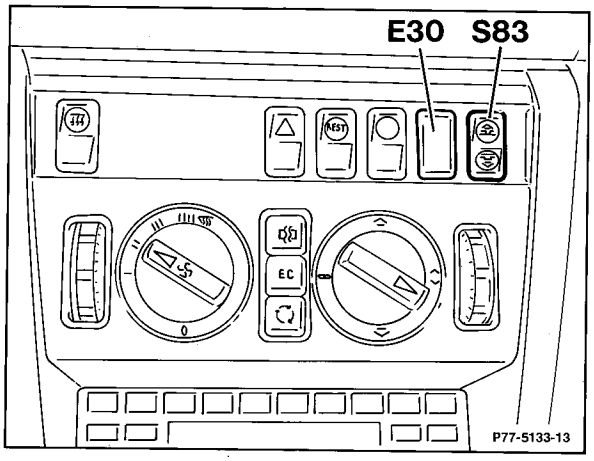

F. Rear axle switches for roll-over bar (S83/2, S83/3)

The rear axle switches are located on the left and right sides on the rear axle spring links for measurement of critical situations, which could lead to the car rolling over (e.g. rear axle suspension fully extended). They are designed as normally closed switches.

The rear axle switches have two positions each labeled:

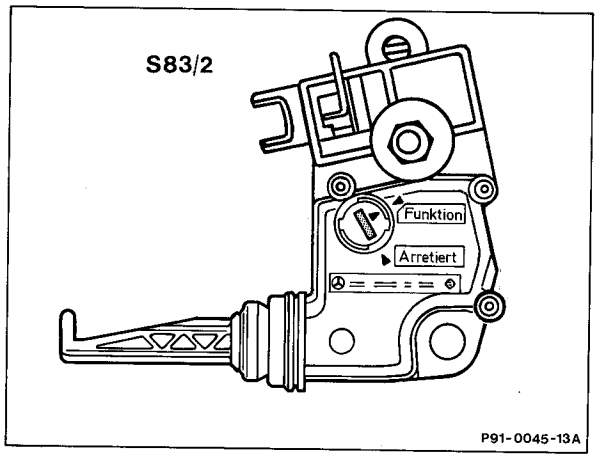

Funktion (function)
In this position the rear axle switch is ready for operation (movable).

Arretiert (arrested)
In this position the rear axle switch is open and mechanically arrested. This position is required for adjustment of the rear axle switches.

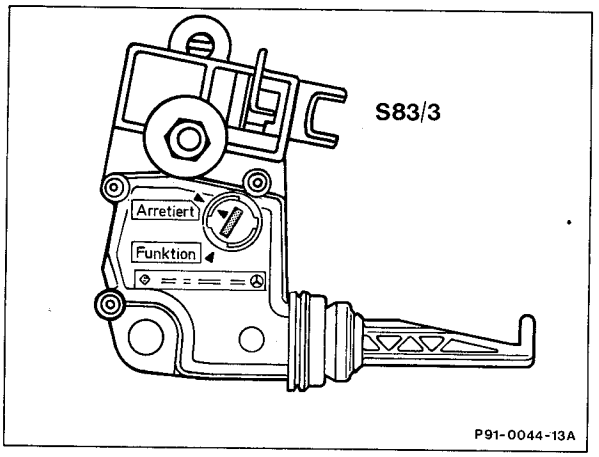

G. Supporting and actuating elements

The roll-over bar is driven on the left side by a hydraulic cylinder on the supporting and actuating element (2).
The pressure is supplied by a hydraulic unit located in the right trunk recess. The corresponding solenoid valve on the roll-over bar valve block (Y57) is actuated by the soft top control unit for extending and retracting the roll-over bar (8).

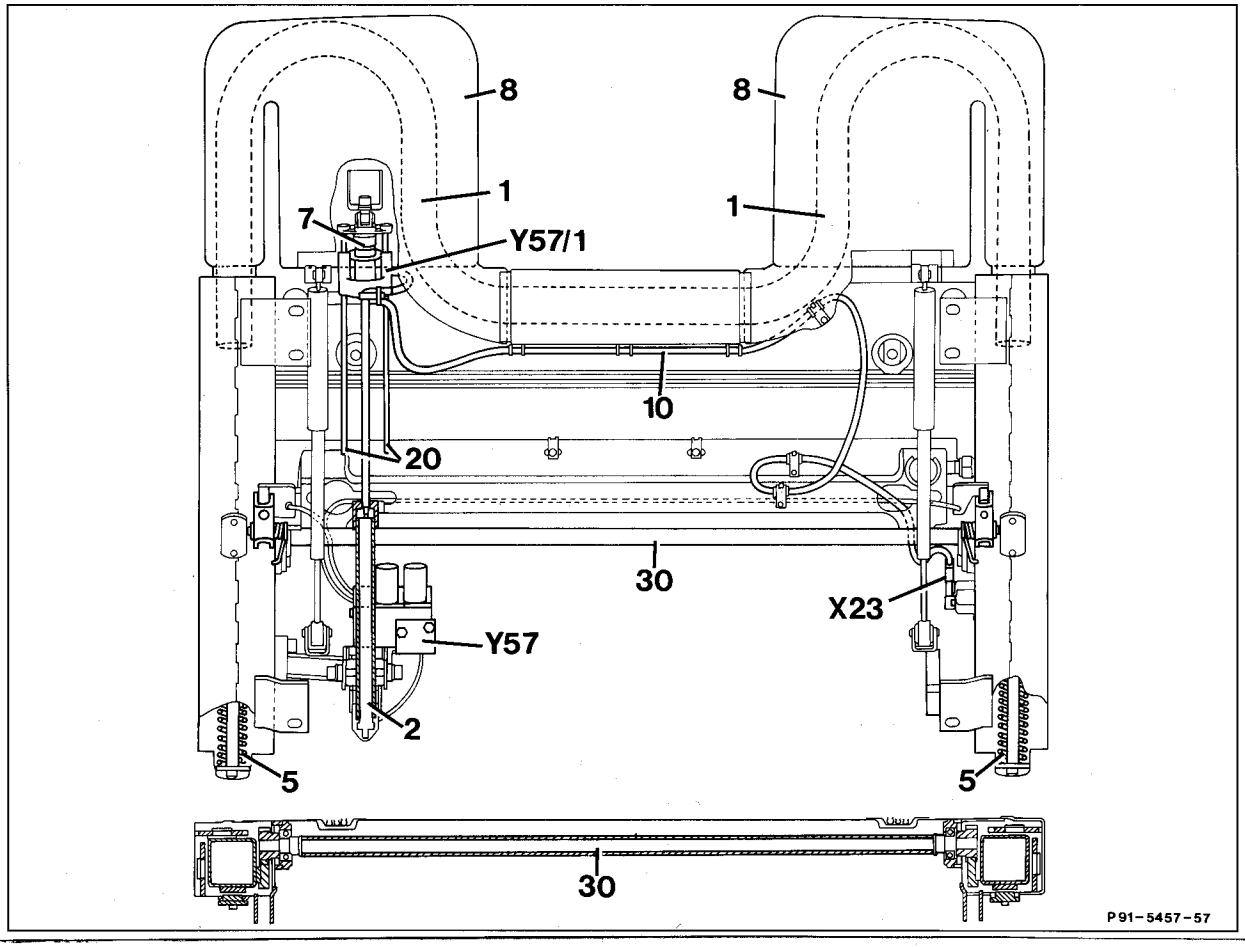

Mechanical interlock of actuating element
Since the hydraulic circuit is not under pressure when the convenience actuation feature is not in operation, the piston for the actuating element must be locked mechanically in the bottom position (A). It is locked by the spring force (4) acting on the balls (5). When the convenience actuation feature is operated the interlocking piston (3) and piston (2) receive pressure acting against the spring force. This releases the lock (B).

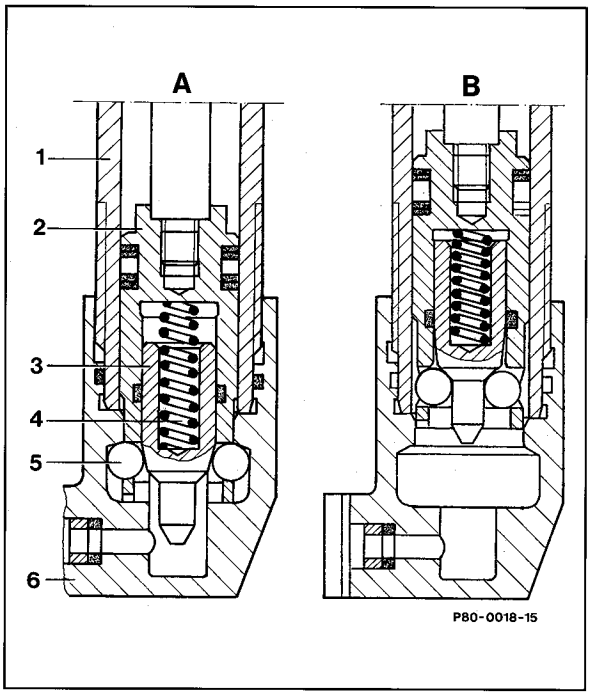

Crash actuation

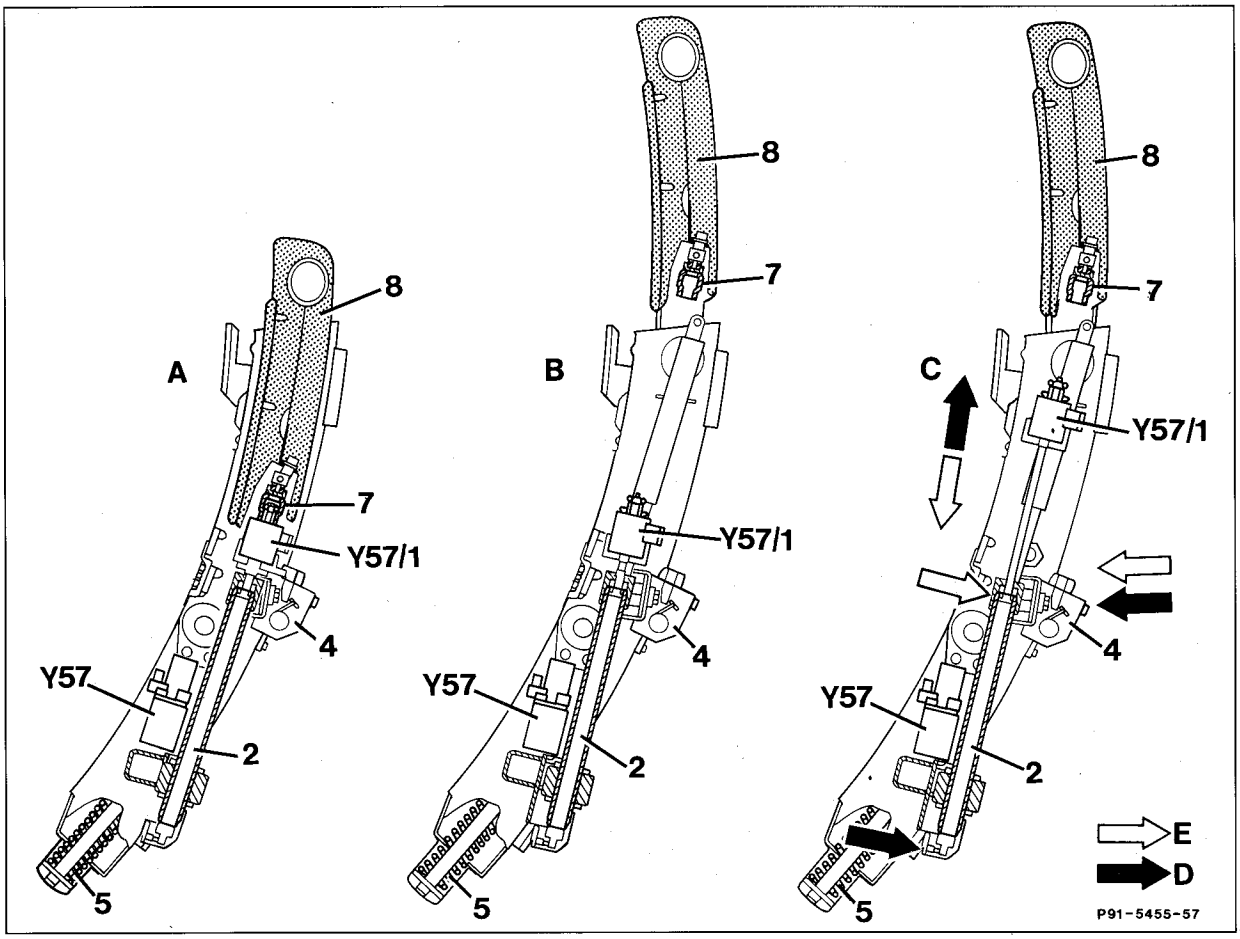

Y57	Valve block, roll-over bar (ÜRB)	2	Supporting and actuating element
Y57/1	Roll-over bar (ÜRB) triggering solenoid	4	Locking pawl
A	Roll-over bar retracted	5	Spring (crash actuation)
B	Roll-over bar crash actuation	7	Connector (triggering solenoid)
C	Roll-over bar retracted following crash actuation	8	Head restraint
D	Hydraulic system under pressure (extend)		
E	Hydraulic system under pressure (retract)		

In the stored position (A) the supporting and actuating element (2) is held in place by the lock (7) and the roll-over bar triggering solenoid (Y57/1). If the triggering solenoid (Y57/1) is tripped by the control unit (ground signal), the lock (7) opens and the head restraints (8) are extended within approx. 0.3 s (B) by the pretensioned springs (5).

This procedure is accompanied by a chattering noise, because the locking pawl (4) engages in the rack during the extension operation.
This ensures that the roll-over bar will be locked even when loaded prematurely.

To retract the roll-over bar following a crash actuation (C) it is necessary to actuate the roll-over bar convenience switch (S83, or S83/4) for approx. 5 s in the direction extend.
This causes the supporting and actuating element (2) to be put under pressure by the roll-over bar valve block (Y57) moving the triggering solenoid (Y57/1) up to engage with the lock (7).
The roll-over bar can then be retracted.

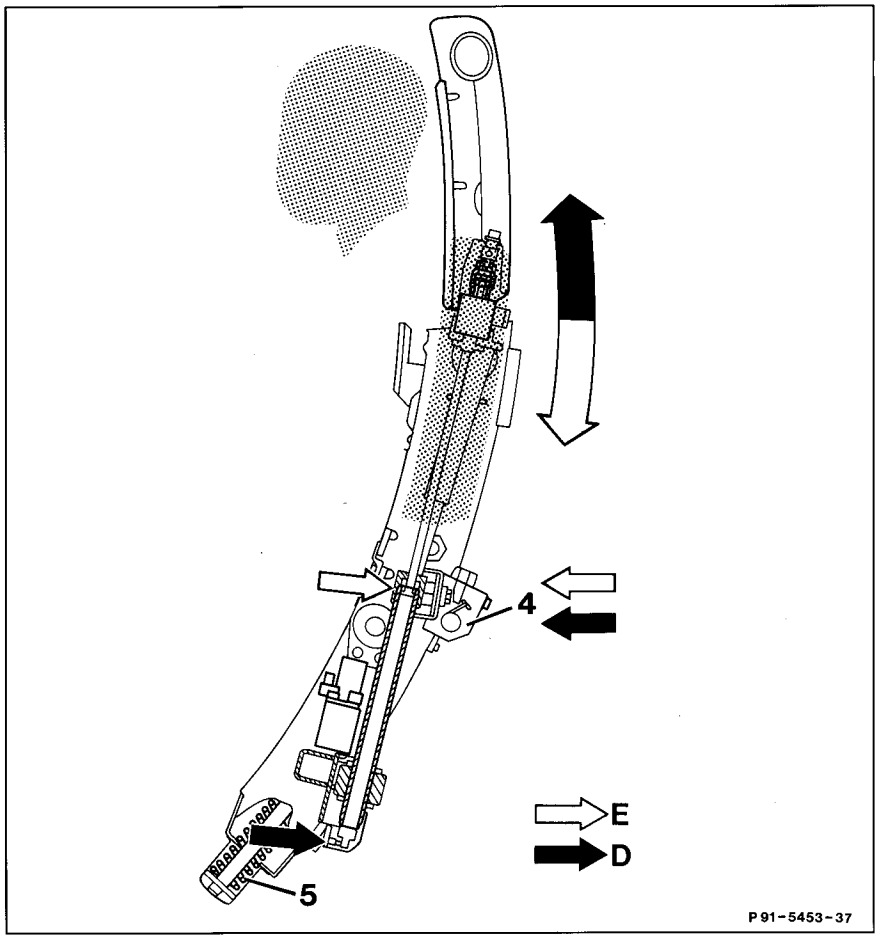

4	Locking pawl
5	Spring (crash actuation)
D	Hydraulic system under pressure (extend)
E	Hydraulic system under pressure (retract)

Convenience feature

The convenience actuation feature puts the hydraulic element under pressure on the piston side (arrow D) to extend the roll-over bar and on the rod side (arrow E) to retract the roll-over bar. This releases the tension on the spring (5) or retensions the spring respectively.

The extension speed as well as the extension force (resulting from the spring force and hydraulic force) of the roll-over bar are controlled by a restrictor in the actuating element or by dampers. In order to avoid noises when the roll-over bar extends (locking pawl - rack) the spring loaded locking pawls (4) on both sides are supplied with pressure by a hydraulic servo-cylinder and pivoted away from the rack.

Crash actuation has priority over convenience actuation, i.e. the triggering solenoid can be actuated even during convenience actuation. For this purpose the pressure to the servo-cylinders is released and the locking pawls (4) pivot into the rack, the roll-over bar is extended by the spring force (5).

See table for retraction of roll-over bar following crash actuation.

H. Hydraulic unit

The hydraulic unit (pump, motor, supply reservoir) is located in the right trunk recess. When the roll-over bar convenience actuation switch or the soft top actuation switch is pressed, the pump (A7/5) runs as long as the switch is pressed supplying a pressure of approx. 180 + 10 bar. This pressure is limited to 180 bar by a pressure limitation valve. The roll-over bar hydraulic circuit is supplied directly by the pump upstream of the main valve (A7/5y1).

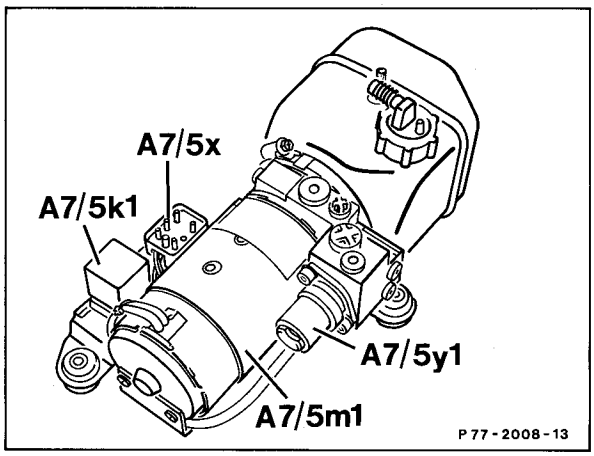

I. Valve block, roll-over bar (Y57)

The roll-over bar valve block is located on the left behind the rear seat backrest. The solenoid valves are actuated by the soft top control unit when the soft top actuation switch is pressed.

Solenoid valve (Y11) extend roll-over bar.
Solenoid valve (Y10) retract roll-over bar.
During this operation pressure is supplied to the locking pawl pivoting it away from the rack.

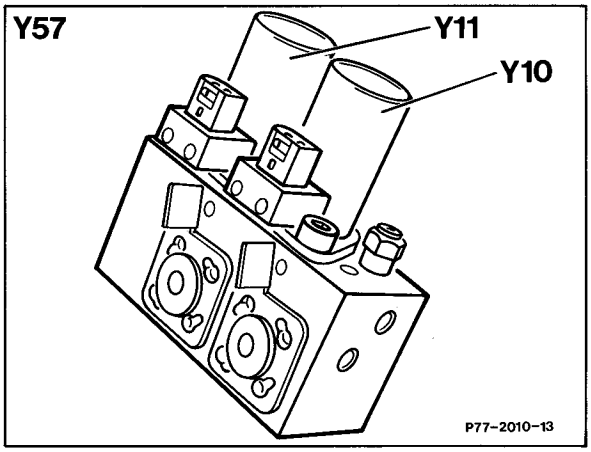

J. Information from roll-over bar control unit to soft top control unit

The roll-over bar control unit is responsible for crash actuation, the soft top control unit for the convenience actuation feature. Both units are connected with one another by means of two lines. The following information is transferred:

a) Roll-over bar okay
b) Roll-over bar defective
c) Vehicle acceleration > 0.4 g
d) Crash actuation

Explanations on b, c and d:

b) If the roll-over bar control unit recognizes a defect (indicator lamp for roll-over bar in center console comes on), the soft top control unit checks the roll-over bar limit switches (extended/retracted). If the roll-over bar is retracted (limit switch retracted switched), the soft top control unit intermittently actuates the LED's in the switches for the convenience feature. This serves as a request to extend the roll-over bar. When the roll-over bar is extended, the LED's go off.

c) This signal serves as an additional check for the speed signals (ABS, ASR). Actuation of the soft top is inhibited when correct speed signals are not present.

d) If the soft top control unit receives a crash signal from the roll-over bar control unit, the pressure/power to the hydraulic system is switched off immediately if the soft top or roll-over bar is presently in operation.

K. Function of crash actuation and retraction following crash actuation

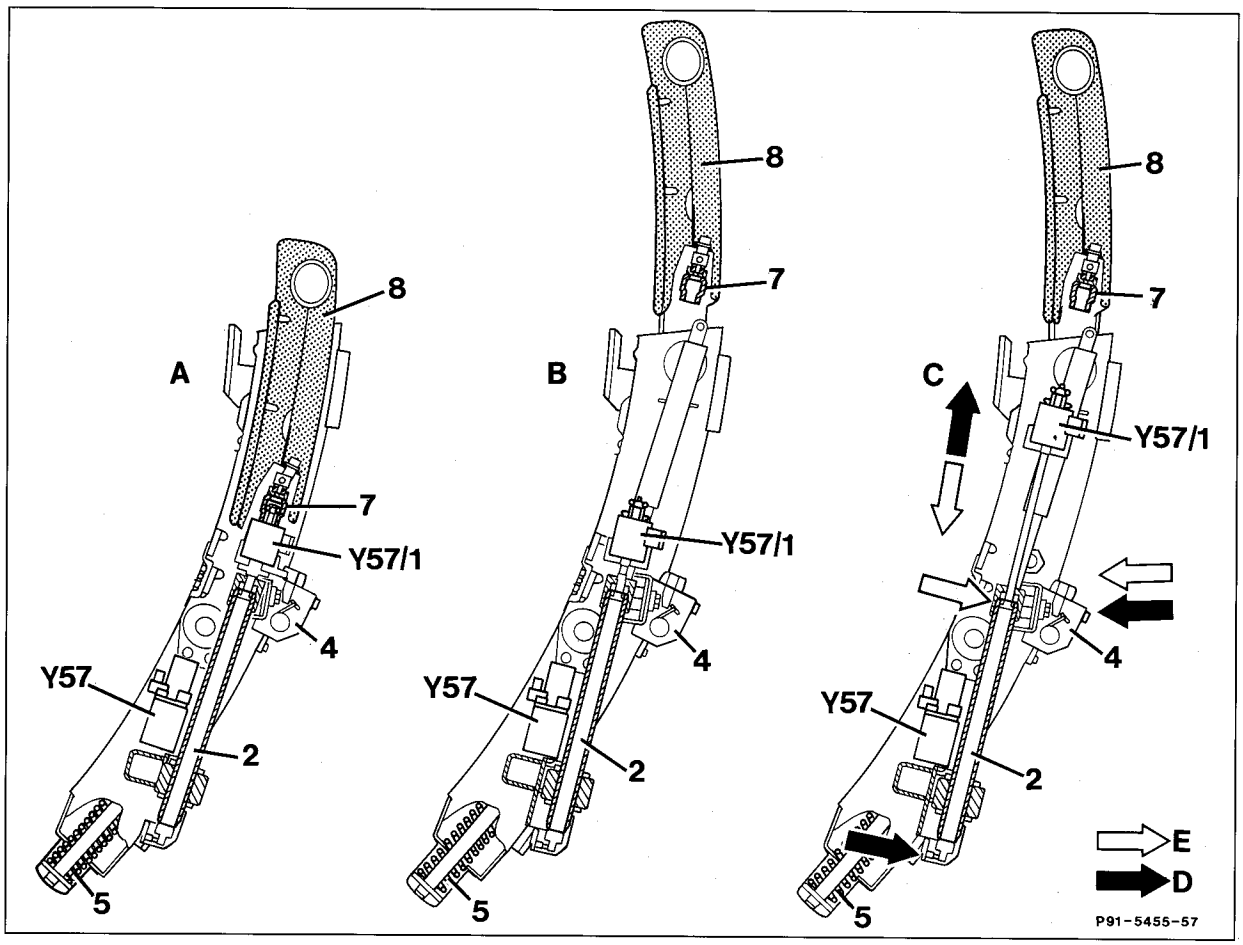

Table: Function of crash actuation and retraction following crash actuation

Figure	A	B	C	
Roll-over bar (8)	retracted	extended	extended	⇒ retracted
Spring (5)	tensioned	released	released	⇒ tensioned
Hydraulic piston rod	retracted	retracted	extends	⇒ retracts
Hydraulic lock	locked	unlocked	unlocked	⇒ locked
Lock (7)	locked	open	open	⇒ locked
Locking pawl (4)	---	in rack	hydraulically pivoted away from rack.	⇒ in rack segment
Triggering solenoid (Y57/1)	---	tripped	---	

Important information on repair work and following accidents

1 To prevent injuries to humans and damage to parts ensure that the roll-over bar is extended and the ground lead to the battery disconnected and covered before starting the following types of work:

a) Body repair work, e.g. on floor or tunnel
b) Work on the rear axle, e.g. shock absorbers, springs, axle
c) Attaching car to body straightening bench.

For items b) and c) also ensure that the plug connections to the two rear axle switches are disconnected and the rear axle switches removed (91-860).

After completion of the previous work check the system for proper function (roll-over bar should actuate) (91-830).

2 Following accidents

Following an accident replacement of individual components is necessary under the following conditions:

- Pulse readout 2: control unit (if pulse readout cannot be reset)
- Recognizable deformation or damage to the control unit or rear axle switches
- If a defect is noted during testing
- Damage to the roll-over bar cover or foam below or to the support and actuating element
- Convenience actuation not possible
- Indicator lamp does not go out.

3 Disposal

The roll-over bar control unit contains approx. 1.5 g of mercury. For this reason proper disposal is required according to the waste disposal laws (see microfiche Information on maintenance, care and repair, item 00-0400).

Workshops without any possibility for recycling components containing mercury can send these parts back to the Sindelfingen plant, Department KGA, Abladestelle (unloading point) 042 within the scope of the parts return service.

Warranty and goodwill parts should be marked accordingly.

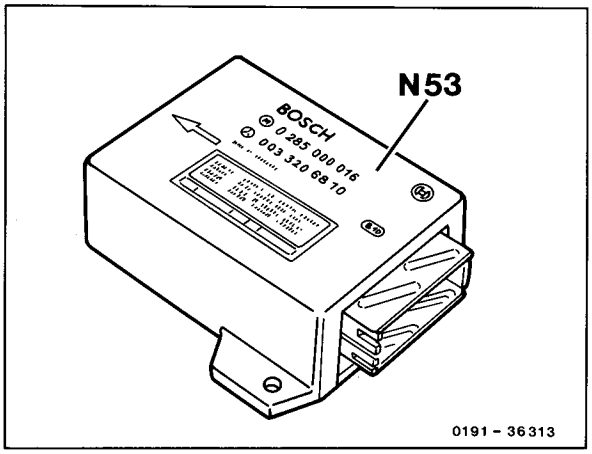

Part containing mercury:

Roll-over bar control unit

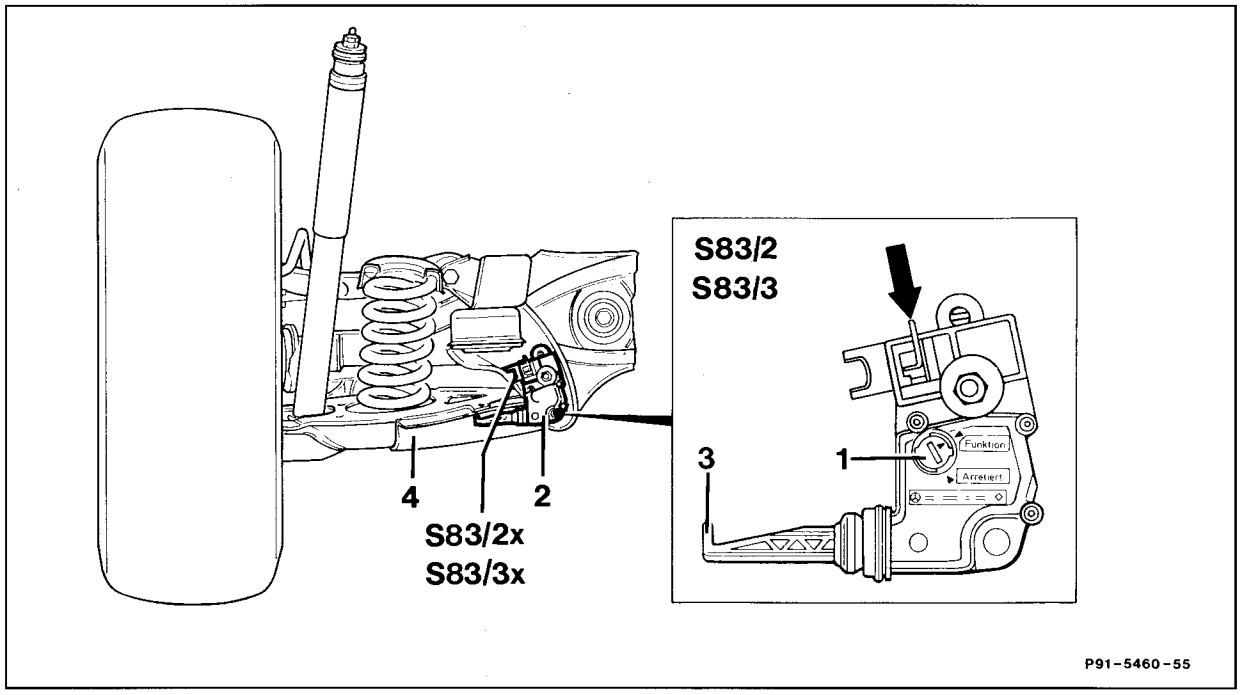

Rotary switch (1) on one of the two rear axle switches (S83/2 or S83/3) . . . . . turn to "Arretiert" (arrested).

Drive the vehicle to test. When the brakes are applied hard at a speed of approx. 5 - 10 km/h the roll-over bar should actuate (crash actuation). After testing turn rotary switch (1) back to "Function".

Note

A chattering noise is produced when the roll-over bar extends. If the roll-over bar has extended (crash actuation), it is necessary to reengage the lock by moving the actuating element up before it is possible to retract the roll-over bar.

Retract roll-over bar. For this purpose press switch (S83 or S83/4) up (extend) (min. 5 s) until the lock engages audibly. Then press the switch down (retract) until the rollover has retracted.

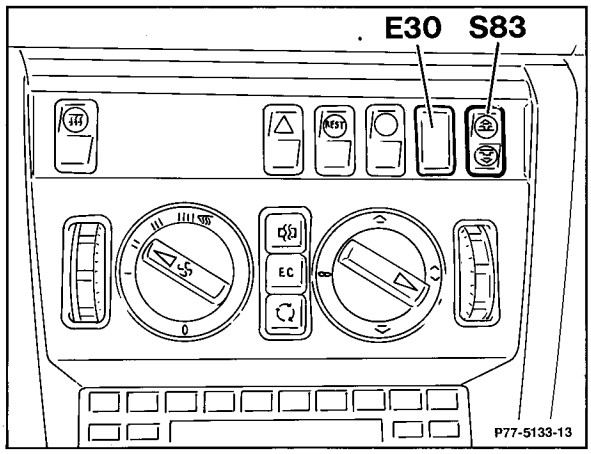

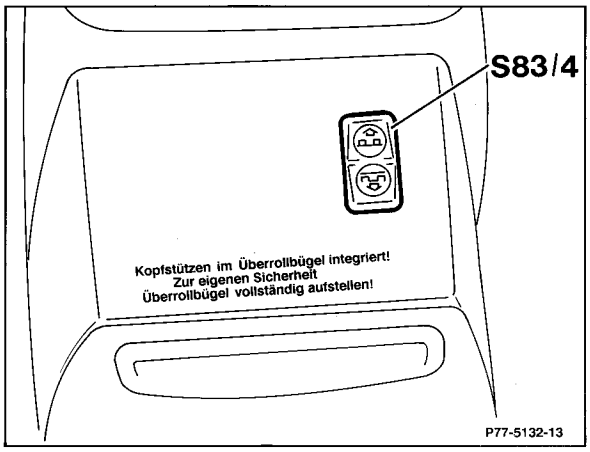

91-840 Removal and installation of roll-over bar control unit

Preliminary work:
Rear seat bench removed (91-170)

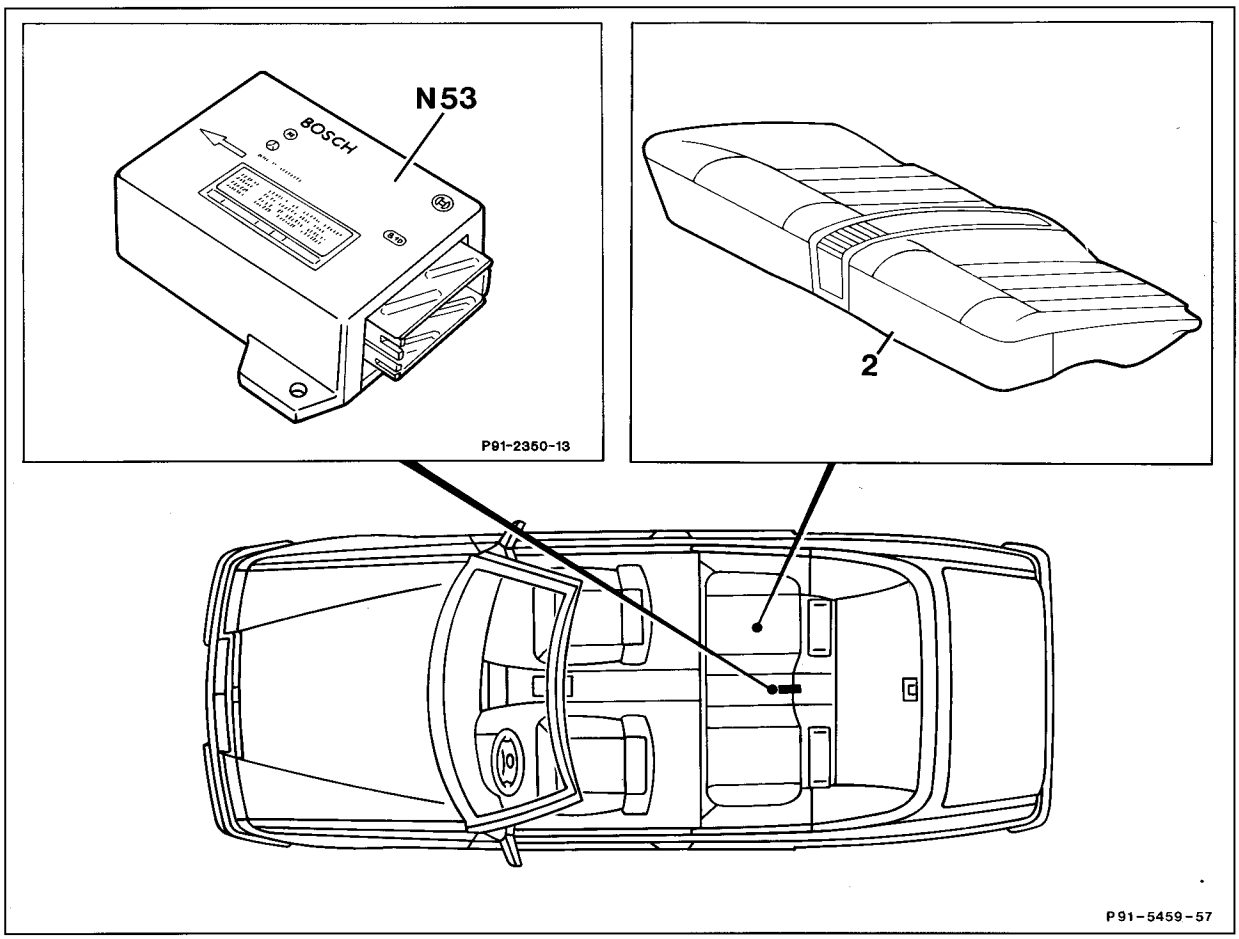

Roll-over bar	extend, retract.
Ignition	switch off.
Ground lead on battery	disconnect, connect.
Plug connector on control unit (N53)	disconnect with installation and pulling tool, connect.
Torx screws	screw out with special tool, screw in (10 Nm).
Control unit	remove, install.

Note
When replacing the control unit check the system via pulse readout. Connect pulse counter (socket 9). If the pulse readout is 1, no fault is present in the system. Check roll-over bar for proper function (91-830).

Special tools

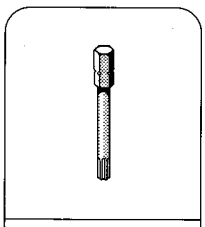

126 589 00 10 00
46

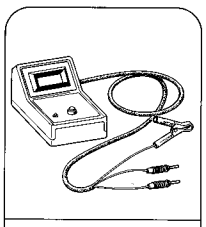

124 589 19 21 00
07 83

Commercially available tools	Order no.	e.g. Company
Ratchet (1/4")	415	e.g. Eduard Wille GmbH
Connector (1/4")	412	D-42331 Wuppertal

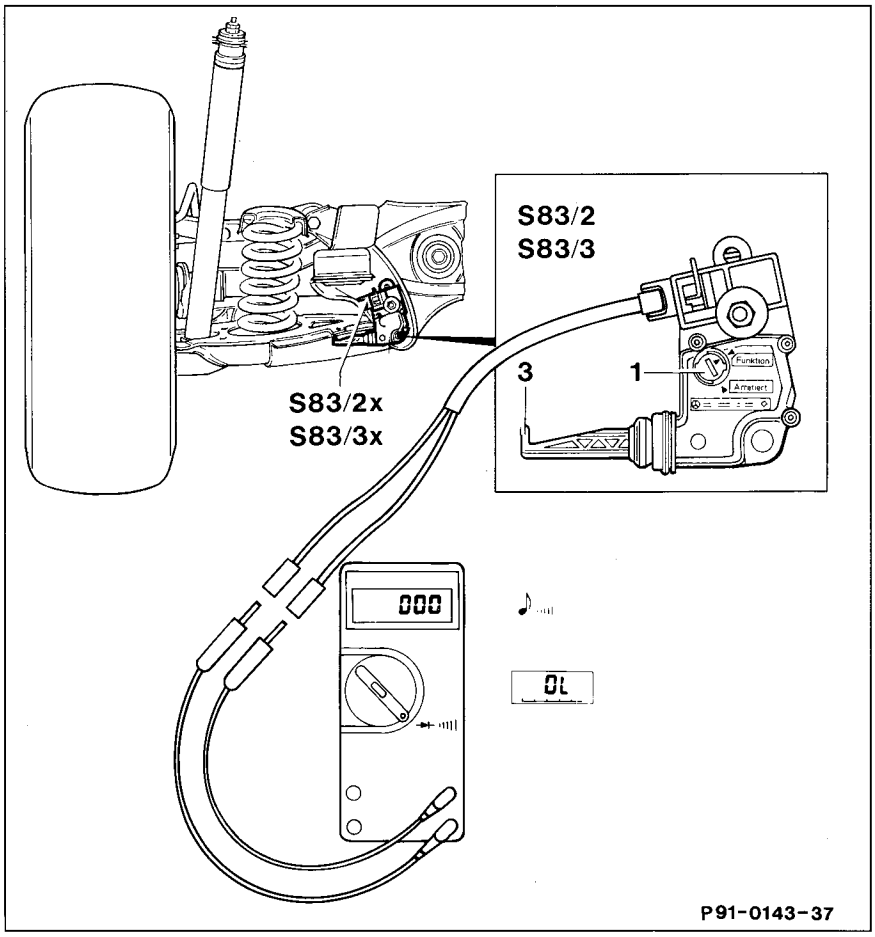

Function test

Multimeter and test cable (129 589 12 63 00) . . .	connect according to connection schematic, disconnect.
Rotary switch (1)	turn to position "Function".
	Nominal value: > 20 kΩ or buzzer does not sound.
Moving switch toggle (3)	actuate.
	Nominal value < 1Ω or buzzer sounds
Rotary switch (1)	turn to position "Arretiert" (arrested)
	Nominal value: < 1Ω or buzzer sounds

Commercially available tester

Multimeter	e.g.	Firma Sun DMM-S Arometer 2003 Fluke 23

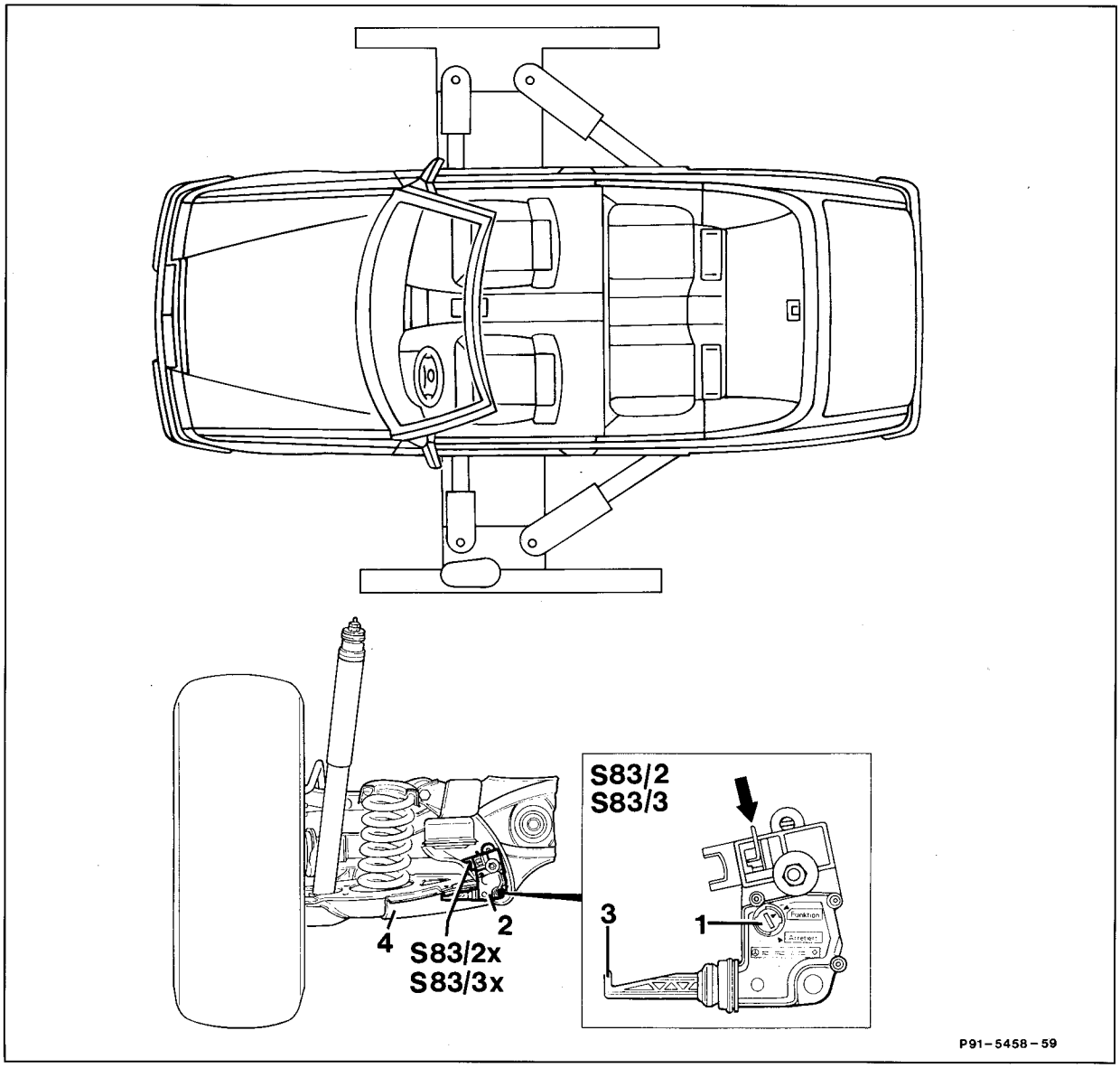

Removal

Roll-over bar	extend with convenience actuation feature.
Ignition	switch off.
Ground lead on battery	disconnect
Plug connection, left rear axle switch (S83/2x) and right (S83/3x)	unlock by pressing (arrow) and pull off.
Nut (2)	screw off.
Rear axle switches (S 83/2, S 83/3)	remove

Installation

Rotary switch (1) on both rear axle switches	turn to "Arretiert" (arrested)
Left and right rear axle switches	position on bolts.
	Note The rear wheels must hang free (rear axle suspension extended).
Hold rear axle switch on toggle and	touch tip (3) against panel (4).
Nut (2)	tighten (4 Nm + 0.5 Nm)
Plug connection, left rear axle switch (S83/2x) and right (S83/3x)	press on until they catch visibly (arrow).
Ground lead on battery	connect
Roll-over bar	test for proper function (91-830).
Rotary switch (1)	turn to "Function".

91–900 Removal and installation of roll-over bar

Preliminary work:
Rear seat and rear seat backrest removed (91–170).
Observe safety regulations (91–820).

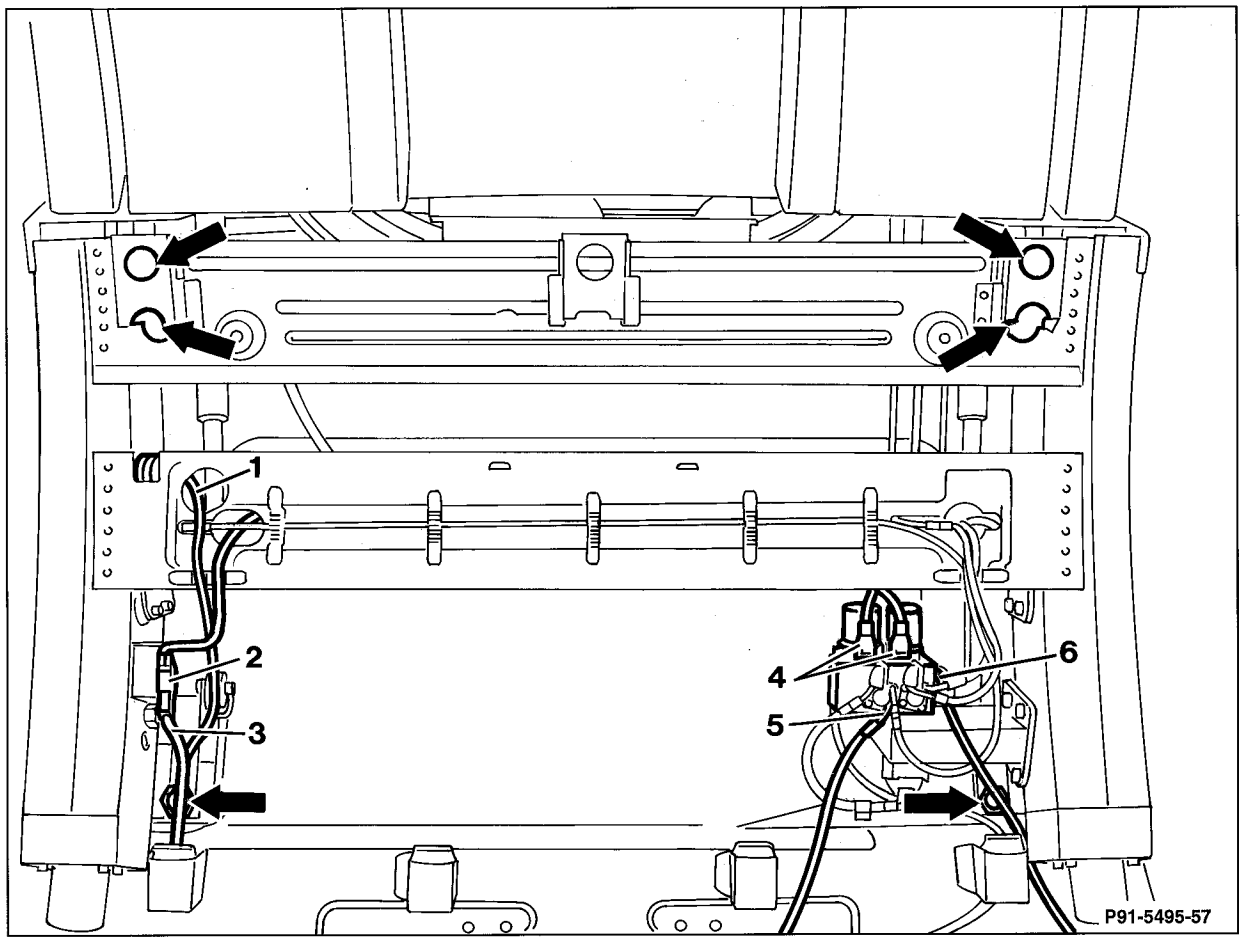

Roll-over bar	extend.

Note
If the roll-over bar cannot be extended with the convenience switch, use the crash actuation (91–170).

Plug connection (1) S83/6	disconnect, reconnect.
Plug connection (2) X23	disconnect, reconnect.
Plug connection (3) S83/5	disconnect, reconnect.
Plug connection (4) Y57y10, y11	disconnect, reconnect.
Hydraulic line (5, 6) no. 10, no. 14	disconnect at valve block Y57, reconnect.

⚠

Plug the hydraulic lines and connections on the valve block immediately.

Hydraulic line no. 10

Female plug	129 589 00 91 07
Male plug	129 589 00 91 11

Hydraulic line no. 14

Female plug	129 589 00 91 08
Screw plug	129 589 00 91 09

Screws (arrows) ..... screw out, screw in.

Roll-over bar ..... pry out, install.

⚠

Reinstall intermediate layer at top mount

Leakage ..... check.

System ..... check for proper function (91–830).

Special tool

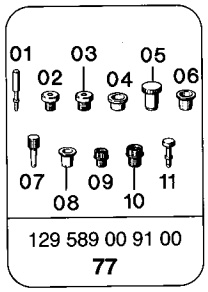

Survey of items

No.	Item	Coordinates
91-86121	Cover of rear seat cushion in range of seat corrugated (fabric lining only)	B 17
91-86122	Clattering noises on rough road with rear seats not taken	B 17
91-87011	Driver's seat cushion too soft or worn out	D 17
91-87071	Noises at driver's and front passenger seats	D 17
91-87111	Driver's seat cushion worn out (vehicles from production period 01/87-08/87)	E 17
91-88011	Noises from mechanical seat adjusting device when driving around bends	E 17
91-88012	Head restraint can no longer be removed following wrong installation	G 17
91-88021	Noises from seat cushion when driving around bends	G 17
91-89051	a) Driver's seat cushion floats or tilts laterally when driving around bends b) Driver's seat cushion cover damaged on side in the area of tilt adjustment mechanism	G 17
91-89071	Noises on tilt adjustment mechanism	H 17
91-89072	Scratching noise in upper backrest range when backrest upholstery is energetically depressed	J 17
91-89073	Noises from manual seat height adjusting device	K 17
91-89074	Noise from seat adjuster when driving around bends	K 17
91-90041	Welt on driver's seat cover produces noises (only fabric/black trim of production period 01/02/90)	K 17
91-88042	Belt positioner fails to extend or to return	L 17
91-89075	Pulse display 10 without airbag release	O 17
91-89111	Clattering noises on front passenger airbag unit	O 17
91-83041	Airbag unit cannot be screwed off	P 17

91 Rear seat system

91-86121	Cover of rear seat cushion in range of seat corrugated (fabric lining only).	Model 124 sedan

Cause
Owing to rear stitching of cover, the seat cover looks corrugated under a one-sided load.
Remedy
Take rear insertion strip out of connecting strip. Double up insertion strip and put back again.

Production breakpoint: 11/86

91 Rear seat system

91-86122	Clattering noises on rough road with rear seats not taken.	Model 124 T-sedan

Cause
Too much play of lateral bearing bolt in bearing.
Remedy
Loosen screws and eliminate play by turning bearing.

Note
Do not remove wheelhouse lining for this purpose.

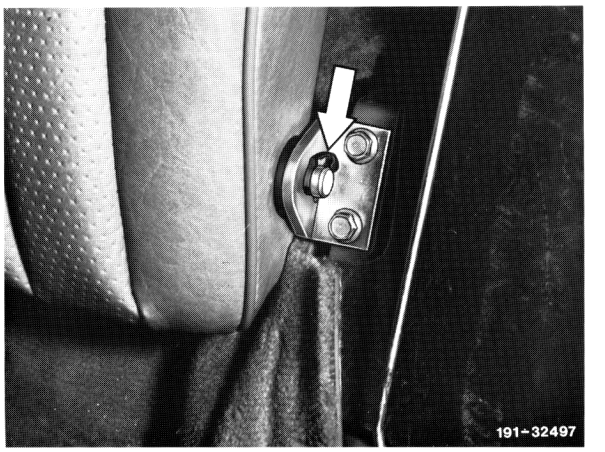

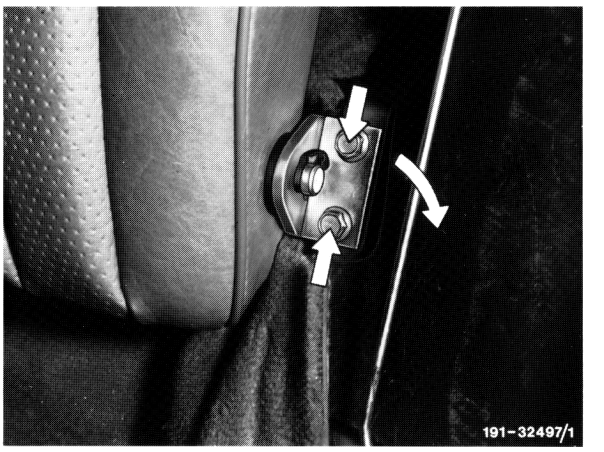

67.074312

91 Driver's seat

91-87011 Driver's seat cushion too soft or worn out.

Cause
Spring core in cushion frame too soft.
Remedy
Install reinforced rubber hair support.

Note
If this complaint shows up on a reinforced driver's seat exchange cushion frame of vehicles manufactured prior to 12/86 for a standard cushion frame. Simultaneously install the new, reinforced rubber hair support.

Production breakpoint: 12/86

Parts	Part no.
Reinforced rubber hair support for driver's seat with fabric, velours or tex leather cover	124 910 14 50
Reinforced rubber hair sup. for driver's seat with leather cover	124 910 12 50
Cushion frame (with tilt adjustment)	124 910 19 22
Cushion frame (without tilt adjustment)	124 910 18 22
Clip (for leather 11 each; for fabric, velours and tex leather 8 each)	201 988 39 78

91 Front seats

91-87071 Noises at driver's and front passenger seats.

Cause
Several noise sources on seat cushion and backrest.

Remedy
Check driver's seat according to Service Information 91/37 and perform the remedy measures named there.

Note
Replace damaged standard rubber hair support by a new standard rubber hair support.

If required, clarify with customer (body weight > 90 kg) whether subsequent installation of a reinforced rubber hair support would make sense.

Standard improved since: 12/86

91 Driver's seat

91-87111 Driver's seat cushion worn out (vehicles from production period 01/87-08/87).

Cause
Bottom layer of standard rubber hair support parting from upper layer (Fig., arrows). Supplier's fault.

Remedy
Replace rubber hair support.

Standard improved as of 09/87

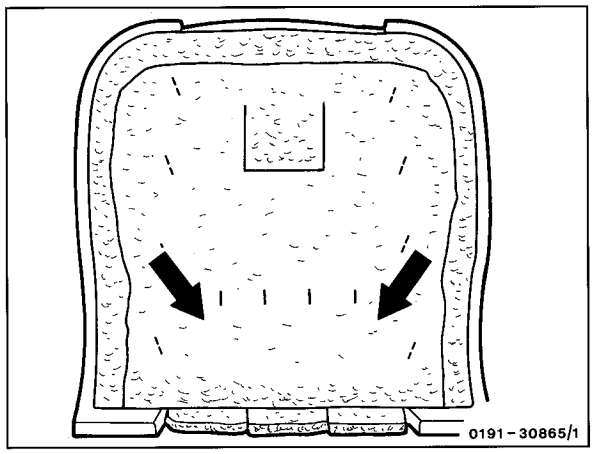

91 Driver's seat

91-88011 Noises from mechanical seat adjusting device when driving around bends.

Cause
Plastic bushings in transverse tube of longitudinal adjusting lever are causing noises.

Remedy
Lubricate plastic bushings left and right on removed seat.

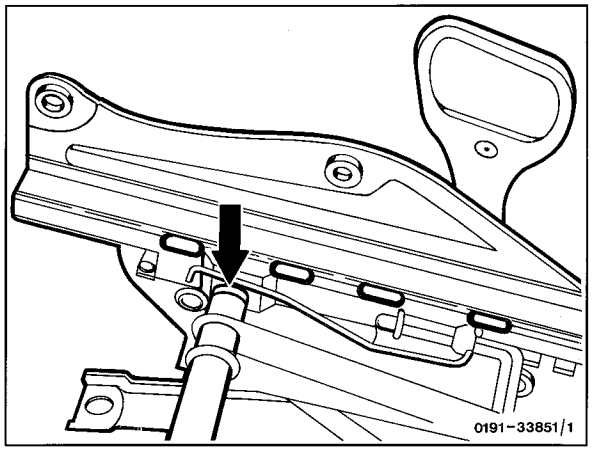

91 Rear seat system

91-88012 Head restraint can no longer be removed following wrong installation. Model 124 T-sedan

Cause
Operating fault, head restraint arm binds in guide rail, which has no unlocking button.

Remedy
Pull out head restraint by jerking with increased force in upward direction, pushing head restraint forward.
Standard production modified since 10/87.
Detent in second guide rail removed.

91 Driver's seat

91-88021 Noises from seat cushion when driving around bends.

Cause
Reinforcing panels of cushion frame are rubbing against seat adjuster.

Remedy
Straighten projecting ends of the reinforcement plate, lightly file or grind if necessary and grease with door lock grease, part no.
001 989 13 51 10.
Modification of standard component in preparatory stage.

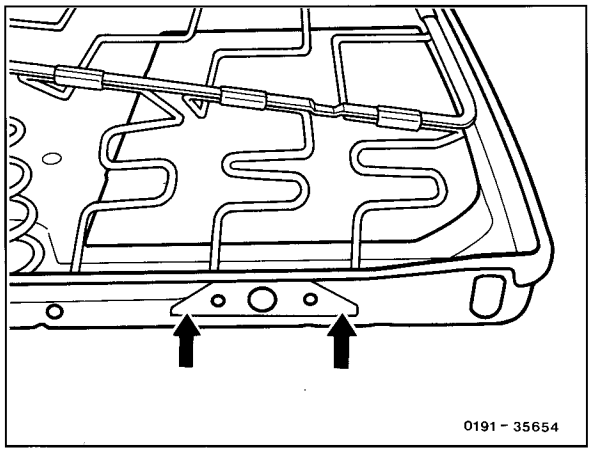

91 Driver's seat

91-89051 a) Driver's seat cushion floats or tilts laterally when driving around bends.
b) Driver's seat cushion cover damaged on side in the area of tilt adjustment mechanism.

Cause
a) Inadequate lateral guiding of cushion frame.
b) Cover fabric is jammed in at the inclination adjusting device with heavy load on the seat cushion.

Remedy
a) and b) Install foam material wedge (2 off) left and right in the cushion frame.
Part no. 124 910 16 75
Production breakpoint: 04/89 phased-in.

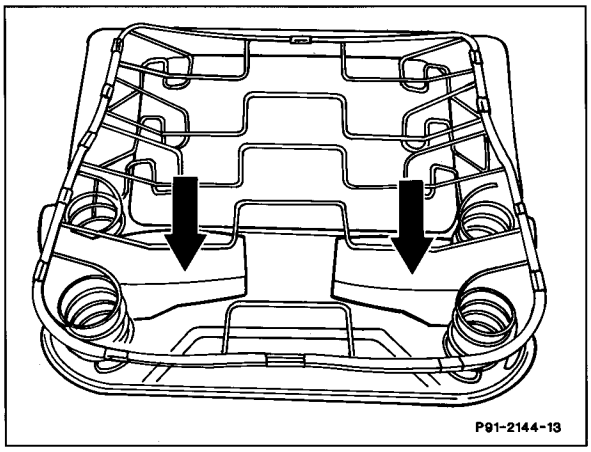

91 Driver's seat

91-89071 Noises on tilt adjustment mechanism

Cause

a) Tilt adjusting shaft rubs in oblong hole of cushion frame, front.

b) Backrest connection rubs against cushion frame or seat adjuster, rear.

Remedy

a) Grease both oblong holes with MB door lock lubricating grease, part no. 001 989 13 51 10. Actuate tilt adjusting shaft several times.

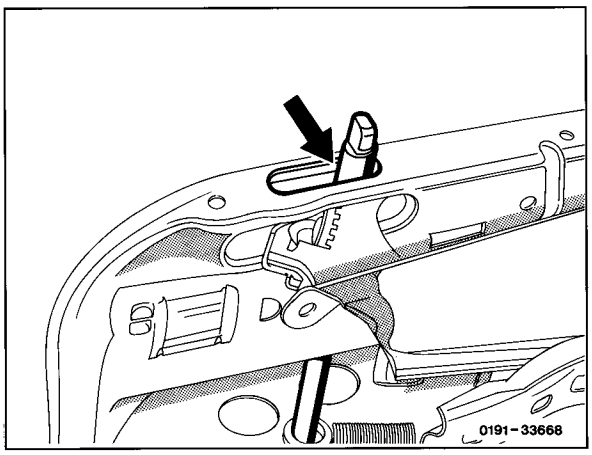

b) Lubricate backrest connection (arrows) left and right. For this purpose, force off lining of backrest fitting only. Actuate tilt adjusting shaft several times.

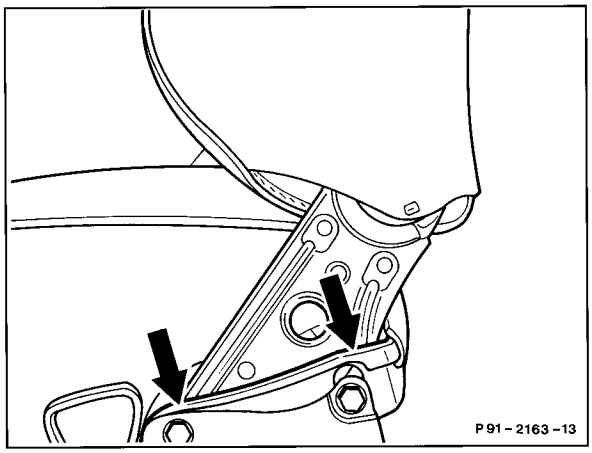

91 Driver's seat

91-89072 Scratching noise in upper backrest range when backrest upholstery is energetically depressed.

Cause

Plastic funnel of headrest guide strip rubs against rubber hair mat.

Remedy

Remove headrest guide strip. Mask sharp edge of plastic funnel with self-adhesive felt (40 x 2), part no. 001 983 23 10 (arrows).

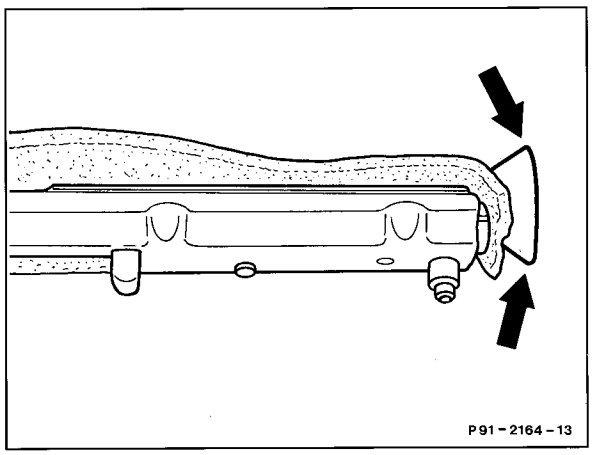

91 Driver's seat

91-89073 Noises from manual seat height adjusting device.

Cause
Lever for seat height not lubricated at pivots (2 bolts).

Remedy
Lubricate bolts on cross member.

Production breakpoint: 11/88.

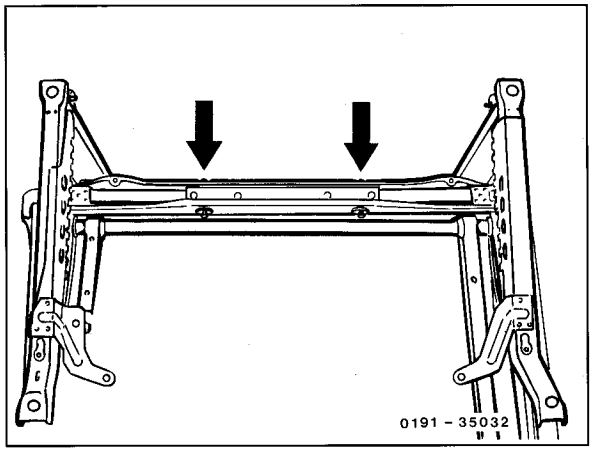

91 Driver's seat

91-89074 Noise from seat adjuster when driving around bends.

Cause
Rivet connection on front leaf spring loose.
Reason: Hole diameter for rivet too large.

Remedy
Install modified leaf spring, part no. 124 919 03 64/04 64 (with hole diameter 6.5 mm), using rivet 910002 006104. In an emergency, the rivet can also be replaced by a bolt M6 x 10 and nut M6.
Production breakpoint: 04/89.

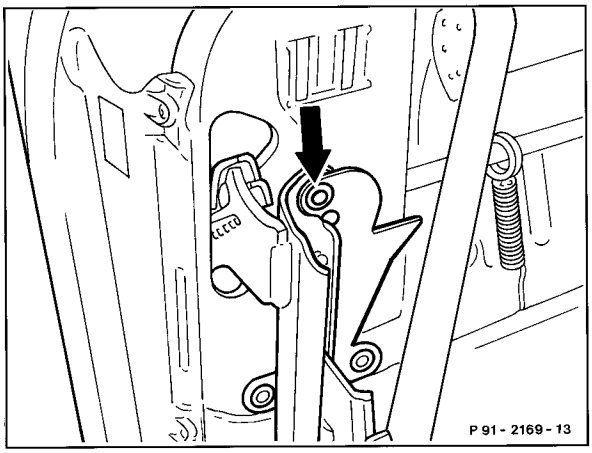

91 Driver's seat

91-90041 Welt on driver's seat cover produces noises (only fabric/black trim of production period 01/02/90).

Cause
Core in welt produces noises due to poorly matched materials.

Damage code for warranty/goodwill claim: 91 075 36
91 076 36

Remedy
Remove core from welt with flat pliers.

91 Belt positioner

91-88042

a) Belt positioner fails to move out every time the door is closed.
b) Belt positioner partially or completely fails to extend with front passenger door not actuated.
c) Driver's and front passenger belt positioners fail to extend.
d) Driver's and front passenger belt positioners fail to return.

Typ 124
Coupé

Cause

a) No door open/closed identification. This happens only during the following sequence:
Open door – ignition On – close door – belt positioner extends – buckle seat belt – belt positioner retracts – ignition remains On – open door – take off belt – close door – belt positioner does not extend.
After the belt is unbuckled, the door is closed only, there is no new door open/closed identification.

b) Door open/closed identification is retained in memory. This happens only during the following sequence: Open doors – ignition On – close driver's and front passenger door – belt positioners extend – buckle belts – belt positioners retract – unbuckle belts – open doors – ignition Off – close doors – open driver's door – ignition On – close driver's door – belt positioners extend – buckle driver's belt – driver's belt positioner retracts – front passenger belt positioner retracts after approx. 30 s – ignition Off – unbuckle belt – open driver's door – close driver's door – open driver's door – ignition On – close driver's door – driver's belt positioner extends – front passenger belt positioner does not extend.

Remedy

None.
At the moment, conditions as described above apply to series vehicles.

c) Driver's and front passenger belt positioners fail to extend.

Remedy

Check microswitch, replace belt positioners if required.

Terminal	Component		Actuation
31 Door contact	Connector on control unit	BU11	Interrupted with door closed
31 Belt buckle	Connector on control unit	BU4	Interrupted with belt buckled up
15	Connector on control unit	BU10	Ignition: ON
30	Connector on control unit	BU2	–
31	Connector on control unit	BU8	–
31	Connector on belt positioner	BU2	–

If no fault can be found, continue testing according to points 1 - 5.
1. Plug connection belt buckle disconnected, interruption, belt buckle defective.
Remedy
Check belt buckle, replace if required.

2. Control unit, relay sticks, circuit board burnt.
Remedy
Replace control unit.

3. Door contact switch connection with ground short.
Remedy
Eliminate ground short.

4. Jacks widened.
Remedy
Replace jacks.

5. Microswitch of belt positioner defective.
Remedy
Check microswitch, replace belt positioner if required.

d) Driver's or front passenger belt positioner does not retract.
Remedy
Carry out test according to the above table.
If no fault can be found, continue testing according to items 1 – 4.
1. Overload switch sticks, belt positioner fails to retract, provided the belt is not buckled up, after 30 seconds.
Remedy
Replace belt positioner.

2. Control unit relay sticks, circuit board burnt.
Remedy
Replace control unit.

3. Jacks widened.
Remedy
Replace jacks.

4. Microswitch of belt positioner defective.
Remedy
Check microswitch, replace belt positioner if required.

If no fault can be found, the belt positioner can be moved into neutral position only by switching ignition "Off – On".

91 Airbag

91-89075 Pulse display 10 without airbag release.

Cause
Control unit sensitively reacting to ground potential difference.

Damage code for warranty/goodwill claim: 82 485 73

Remedy
Replace control unit (production date driver-airbag control unit as of 90 T 002, driver-front passenger airbag control unit as of 90 T 002) and attach ground cable shoe of airbag harness at lowest point.

91 Airbag

91-89111 Clattering noises on front passenger airbag unit.

Cause
Front passenger airbag unit knocks against installation frame.

Remedy
Remove front passenger airbag unit (pay attention to safety presciptions). Cut out 4 felt strips approx. 20 x 25 mm from self-adhesive felt (40 x 2), part no. 001 983 23 10, and glue to inside of installation frame (arrows).

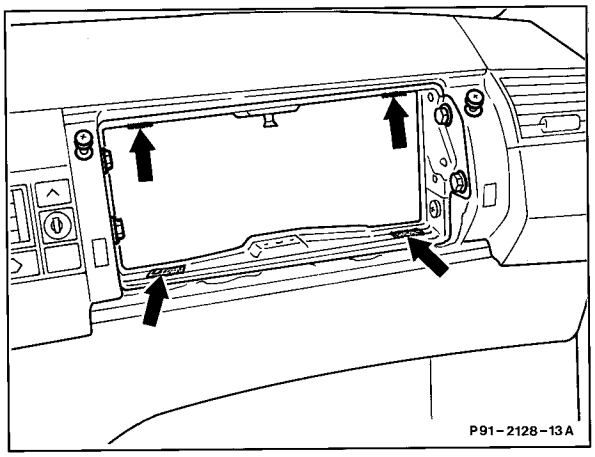

91 Airbag and belt tensioner

91-83041 Airbag unit cannot be screwed off.

Cause
Intorx screw head rounded off, cannot be unscrewed.

Remedy
Do not drill out screw (airbag unit may be damaged):

Call KD, plant Sindelfingen, telephone (0 70 31) 90 - 21 93.

Technical revisions Airbag and belt tensioner Model 124

Type and reason for revision	Model	Launch/chassis no.	Op. no.
Use of a lighter-weight airbag unit with revised assembly procedure. Adjustment of diagonal play no longer included	124	Introduced approx. 11/85	91-660
Belt tensioner with approx. 80 mm shorter tube	124	Introduced approx. 08/87	91-600
New supplier for belt tensioner added, thus revised test after triggering	124	Introduced approx. 08/87	91-750
Relocated and revised adhesive label for replacement date of airbag unit	124	09/87	91-600
New control unit with integral voltage transformer and reserve power source with two triggering thresholds	124	09/87	91-600
Modified belt buckles with switches and resistors, thus belt tensioner triggered only when belt is worn	124	09/87	91-600
New control unit for service (3rd generation as of 09/87 adapted to 1st generation) Note on test coupling/plug connection for airbag, 10-pin **Revised test for airbag 1/3**	124	07/89	91-600

Removing and installing lower noise encapsulation panels 9490

Model 124.1
126.1 starting 1986
201.1
140.1

Front noise encapsulation panel

Removal

- Unscrew small bolts (arrows) and remove front noise encapsulation panel.

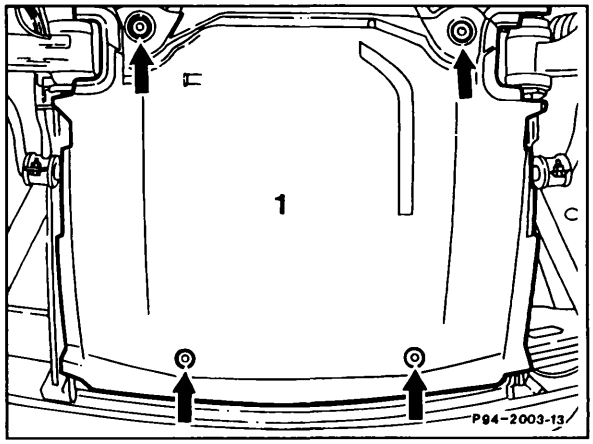

Models 124.1, 140.1

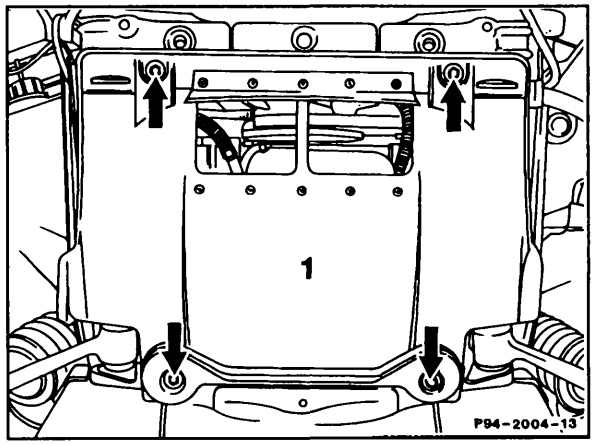

Model 126.1

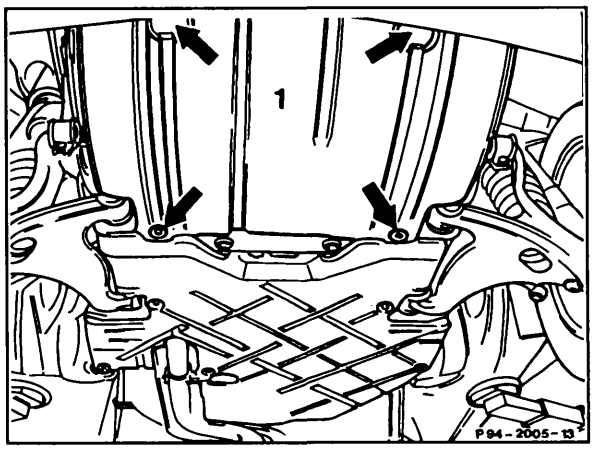

Model 201.1

9490 Removing and installing lower noise encapsulation panels

Installation

- On model 124 and 201 engage the slots on the lower noise encapsulation panel (1) with the tabs of the side panels (4).

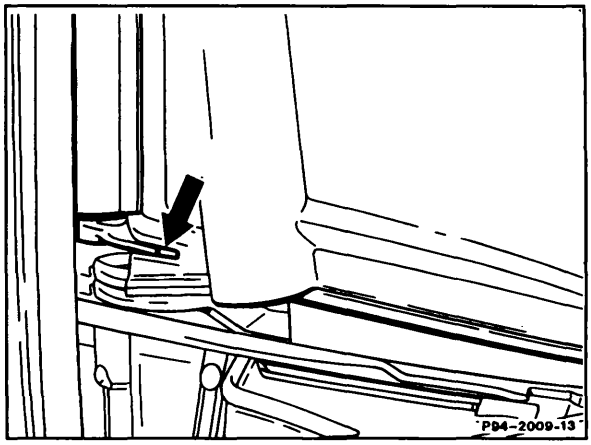

Model 124.1

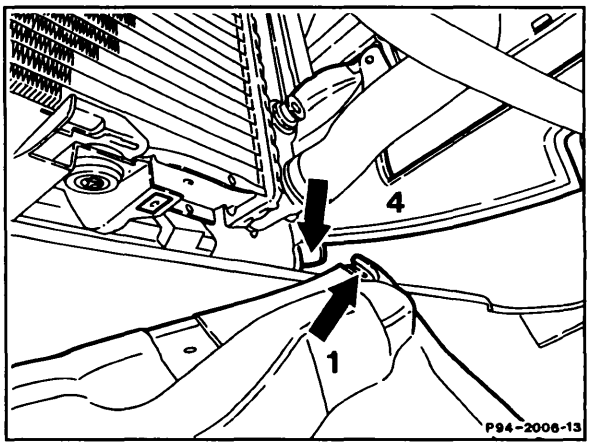

Model 201.1

- Push lower noise encapsulation panel (1) up; edges of side panels (3) must engage over lower panel (1).
- Bolt lower noise encapsulation panel (1) in place.

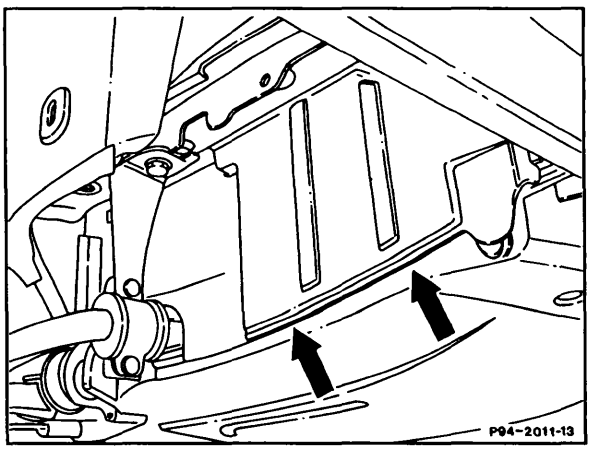

Models 124.1, 140.1

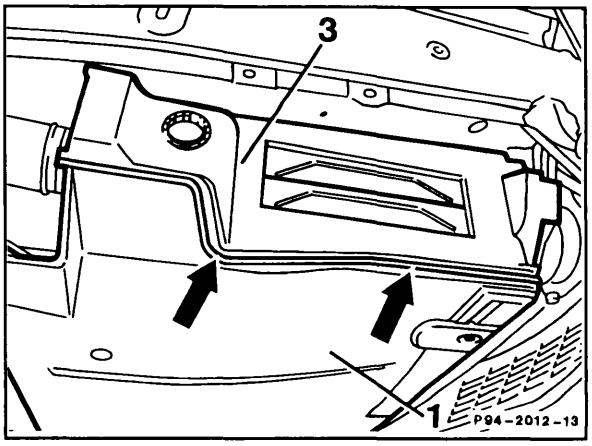

Model 126.1

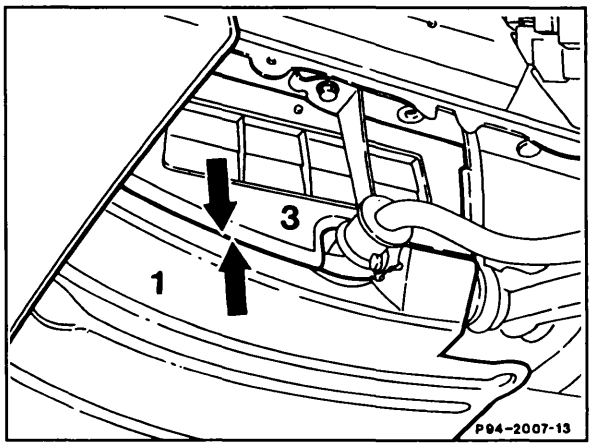

Model 201.1

Center noise encapsulation panel
Model 140.1 only

Removal/Installation

- Screw out small bolts (arrows) and remove noise encapsulation panel (2).

' Install in reverse oder.

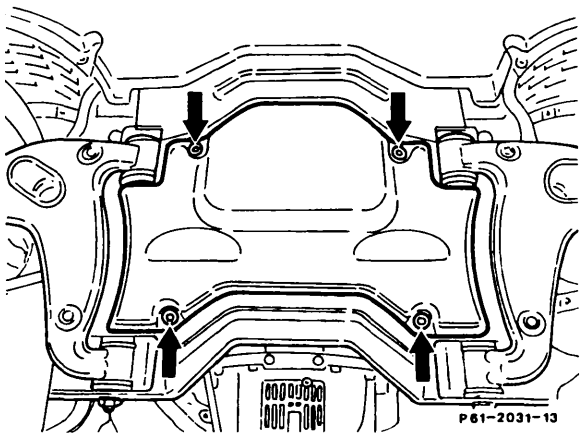

9490 Removing and installing lower noise encapsulation panels

Rear noise encapsulation panel

Removal

- Screw out small bolts (arrows) and remove noise encapsulation panel (2) toward rear.

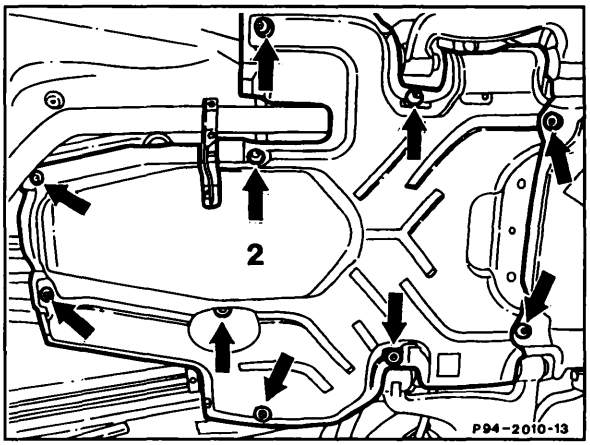

Installation

- Insert rear noise encapsulation panel (2) between front axle cross member and front noise encapsulation panel (1).
- Bolt lower noise encapsulation panel (1) in place.

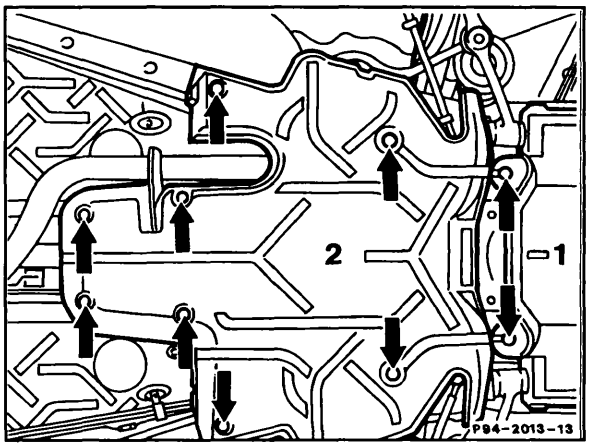

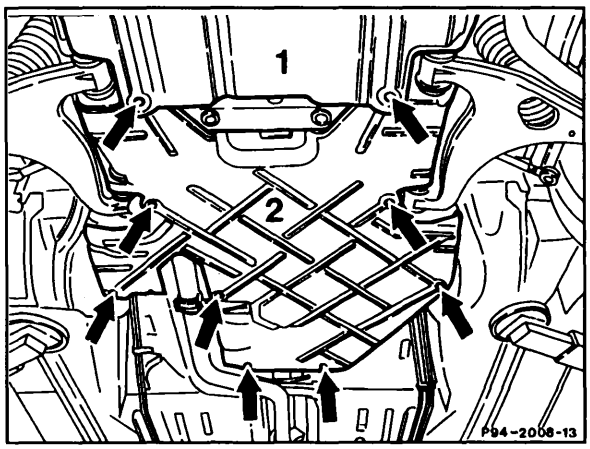

Model 201.1

Conventional tools	e.g. Company, Order number
Flow tester for air	Drägerwerke D–23542 Lübeck CH 216

Noises on bodies may have various causes. The remedies named are information of a general nature and may require additional jobs as required.

Cause	Remedy
Welding point noises	
Loose welding points (metallic knocking)	Slightly part flanges and oil and calk, if necessary. **Note**: With several loose welding points in one seam, accurate checking and perhaps repair may be necessary.
Paint breaking noises	
Paint breaking at transitions, connection points of body parts caused by body torsion	Treat separating points lightly with Acmosil 54 KF. After the removing agent has been exposed to the air, a durable wax film is formed also at narrow gaps. Oil in special cases. Keep clean.
Foam part noises	
Foam parts have contact and rub against each other or rub at another part of the equipment.	A permanent gap must be provided at the contact points of the foam parts, e.g. backing of elastic material (felt strips part No. 000 983 17 10). When installing the foam parts, the foam part surface contacting the body (rear side) must be treated with Acmosil 54 KF (this applies to removed foam parts, which are again installed, and for spare parts).

Cause	Remedy
Rubber noises	
Rubber seals of the doors or the tail gate rub at the contact surface.	Check door gap and adjust, if necessary. Check sealing frame, if required, renew or clean and rub with French chalk. Check and clean contact surface of sealing frame at the body.
Wind noises	
With fast driving, wind noises can occur on body parts, which deflect air flowing by. Also when air turbulances are formed by a cavity. Such cavities (bag formation) are formed when a sealing rubber does not fully contact within a small area. Further causes for wind noises are, e.g. not properly sealing door sealing frames.	These leaks can be better detected by smoke from a flow test tube. To carry out this test, close doors, windows and, if fitted, sun roof, and switch the heating fan to its highest output in order to create overpressure. The suspected areas are blown from the inside and smoke penetration must be checked by an assistant from the outside. Ensure proper fitting of the parts.
Whirling noises	
Whirling noises at certain revolutions or speeds can occur – by oscillation transmission – far away from the actual source of noise. This must be taken into account when trying to locate the noise.	Fasten whirling cable control with cable strap to existing lines.
Sheet metal noises	
With contacting sheet metal parts, noises can occur through body torsion.	1. Separate plates so that a permanent gap is formed, or 2. glue an intermediate piece between the two contact surfaces so that contact is eliminated, or 3. lightly push plates apart and wax with Acmosil 54 KF. **Note**: Avoid damage of the body outer skin.

Cause	Remedy
Foreign body noises	
Foreign bodies are present in cavities.	Establish location of foreign body and – as far as possible – remove or eliminate noise by applying adhesive, e.g. MB universal sealing compound or similar to the foreign body. Appropriate material can be applied via already existing openings in the cavity. In special cases, additional holes may be necessary which afterwards must be conservated and plugged with appropriate plugs. **Note:** In any case, it must be checked at which point the foreign body is missing and – perhaps as a new part – it must be re-fitted.

Survey of items

No.	Item	Coordinates
94-87051	Wind noises in area of window sill of rear door	B 18
94-87111	Wind noises on outside rear view mirror	C 18
94-88101	Clicking noises in area of rear pillar between plastic molding and fender	D 18
94-89011	Clicking and breakaway noises in rear end area	D 18
94-90101	Clicking noises from area of rear window while driving on rough roads	D 18

94 Body noises

94-87051 Wind noises in area of window sill of rear door. Model 124 sedan and T-sedan

Cause

1. Window guide rail is insufficiently held in window sill.

2. Poor fit of window guide rail at top in corner of window sill.

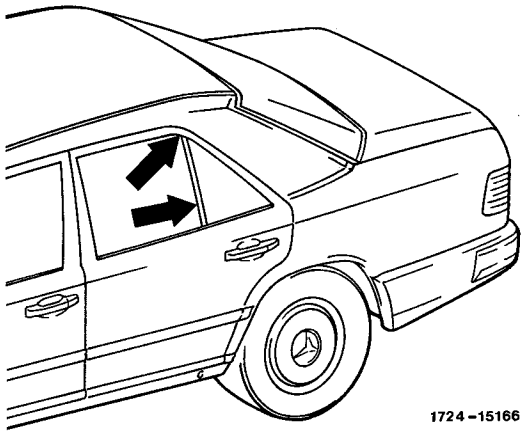
1724-15166

Remedy

1. Install modified window sill (with additional profile on the inside of the crank-operated window and on the outside of the quarter window.

2. Install modified window guide rail on rear door.

Note

The modified window guide rail will be delivered carrying the same spare part number as before. It is recognized only by the modified angle at upper, rear corner. In removed condition, this angle should amount to approx. 130 degrees.

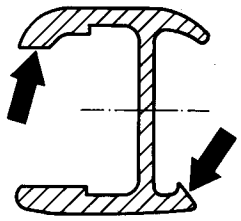
1724-15207

Production breakpoint: 03/87 phased-in.

94 Body noises

94-87111 Wind noises on outside rear view mirror. –

Remedy

In the event of wind noises on outside rear view mirror the installation of a new gasket and careful assembly of outside mirror will in most cases eliminate the noise.

94 Body noises

94-88101	Clicking noises in area of rear pillar between plastic molding and fender.	Model 124 sedan	–

Cause
Bottom edge of plastic molding resting on rear fender.

Remedy
Install rubber buffer, part no. 201 987 02 39, under plastic molding (arrow).

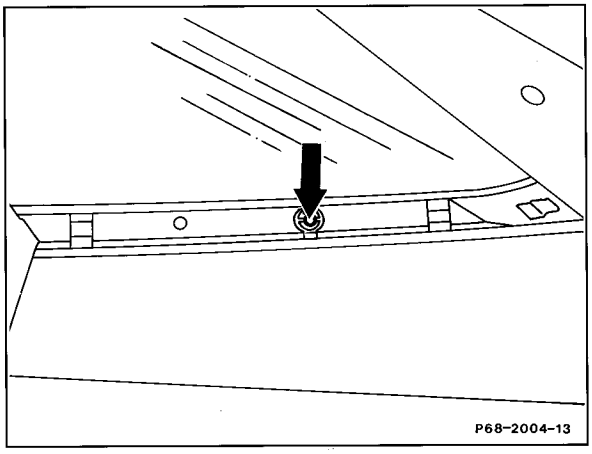

94 Body noises

94-89011	Clicking and breakaway noises in rear end area.	M. 124 sedan and coupe	–

Cause
Reflector housing of rear lamp unit rubs against body (noise is heard only after some time).

Remedy
Install MB sealing cord, part no. 001 987 56 46, at contact surface of reflector housing on body.

94 Body noises

94-90101	Clicking noises from area of rear window while driving on rough roads.		

Cause
Cover over the joint of the trim moulding on rear window is loose.

Remedy
Install modified cover, part no. 124 678 42 37 (inside of cover is teflon-coated).

Production breakpoint approx. 03/90 phased in.

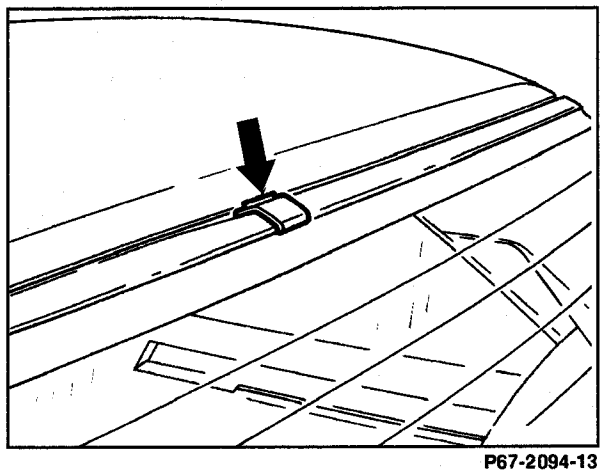

97–100 General information concerning cavity preservation

The cavity preservation with wax applied on all vehicles already by the manufacturer, represents the final measurs taken with regard to protection against corrosion.

A repetition of this preservation is not required.

For vehicles on which repairs of sheet metal parts were effected, repair preservation measures are necessary.

1. Repair preservation

Upon repairs following an accident, spray cavities in processed area with wax. When placing components such as front fender, engine hood, doors, trunk lid, etc., as well as following welding and soldering (brazing) jobs, repair preservation is also required.

Repair preservation should always be applied two times, one after the other, after a drying (aeration) period of five minutes.

It is important that the wax preservation compound is applied **after** the sealing and painting jobs, but **before** the assembly jobs. Otherwise, paint faults will result or components will be smeared with wax. Close openings upon waxing.

Spare bodies should also be preserved two times, one after the other, upon painting.

Spare bodies delivered with top coat ex factory have already been given the standard cavity preservation treatment.

The underfloor should also be preserved in processed area (97–200).

2. Processing instructions

Cavities should be dry for preservation.
Prior to starting preservation jobs, check spray pattern on spray jet. The wax material should come out of jet uniformly in the shape of a circle.

Jets which are spraying in forward direction as well as diagonally downwards are of particular advantage.

The spray hose should be "stiff". Hoses which tend to roll back are not suited.

During preservation, enter spray hose as far as possible in all directions into cavities.

Spray while pulling hose slowly out of cavities.
(processing temperature not below +15 °C).
Clean spray jet and spray hose together with sprayer.

3. Commercially available equipment	Order No.	e.g. company
Combination pressure spray gun (no fog), with special cavity spray head 1100 mm long (suitable for cavity and underfloor preservation)	1.2066 01.4 2.7025 70.3	Deutsche Tecalemit GmbH D–33651 Bielefeld 12
Spray gun, e.g. Lichtenberg LM 54 n U with 1100 mm spray hose and all-around spray head (for cavity preservation only) Lichtenberg spray gun LM 54 n (for underfloor preservation only)		SATA
Airless sprayer, e.g. Terotex		Teroson D–69112 Heidelberg
Barrel pump, e.g. AMA barrel pump		Valvoline Oel GmbH & Co. D–22238 Hamburg

Note

For approved wax preservation compounds refer to Specifications for service products, page no. 385.

A. Detachable body components

Sedan

Engine hood

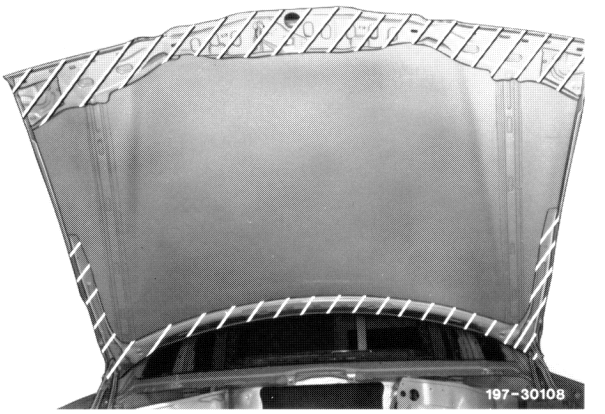

Front fender:
Range behind bulkhead,
cutout for turnsignal lamp

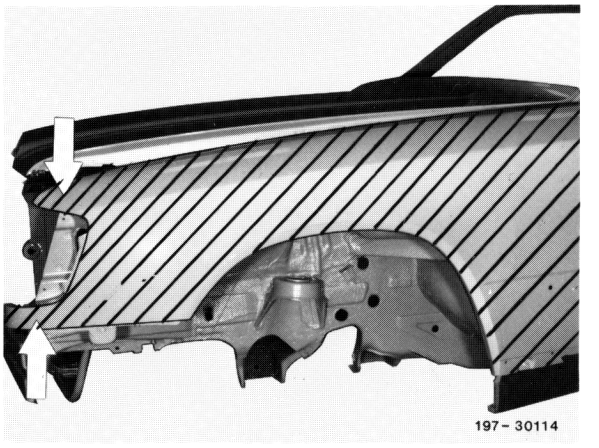

Driver's door in lower range,
holding rail for sealing frame

Note: Glue in insulation prior to waxing.

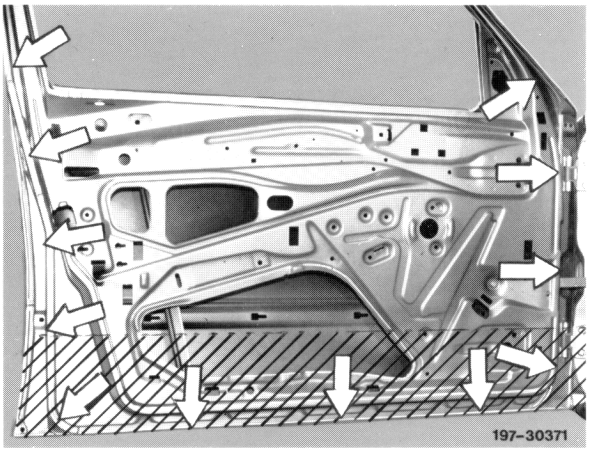

Rear door in lower range,
holding rail for sealing frame

Note: Glue in insulation prior to waxing.

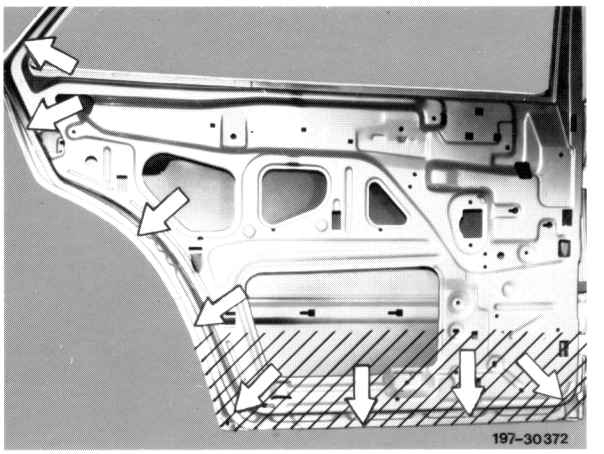

Trunk lid below and laterally

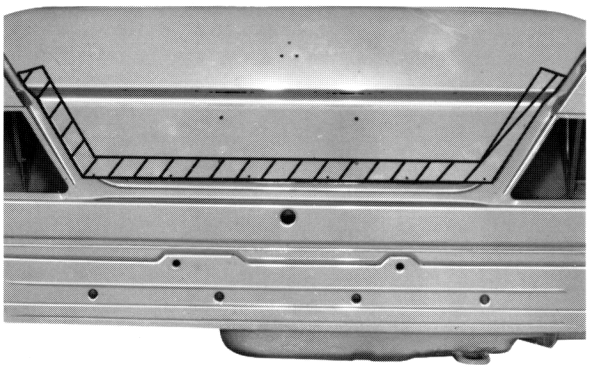

T-sedan

(ranges deviating from sedan)

Tailgate all-around

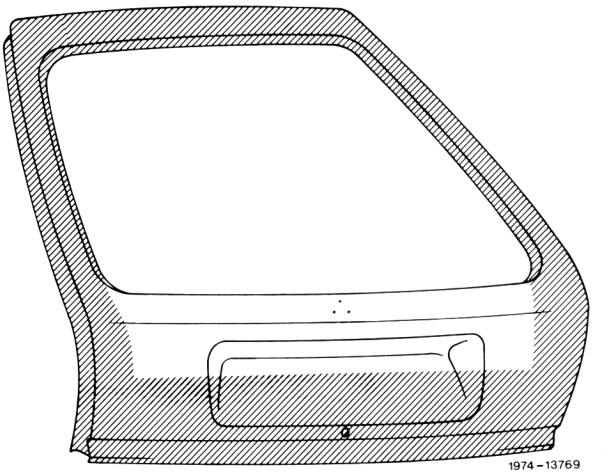

B. Welded-in parts

Sedan

Side member front, cross member front

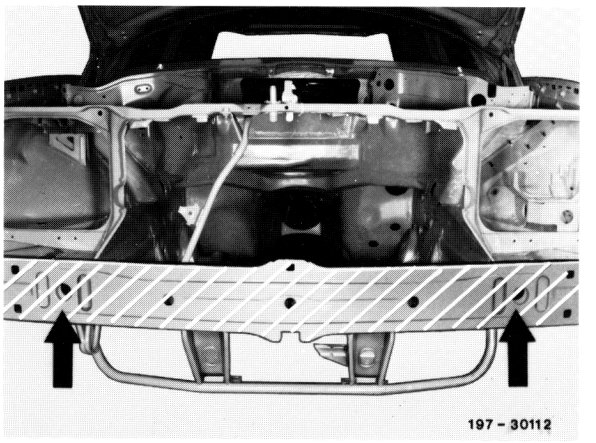

Side member front, damper mandrel, engine carrier, fork carrier inside, axle mount

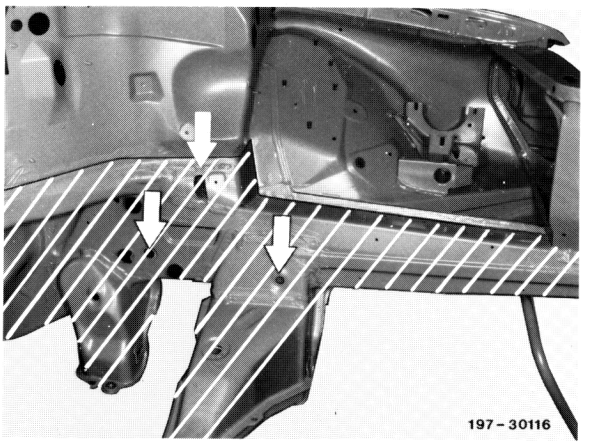

Engine carrier

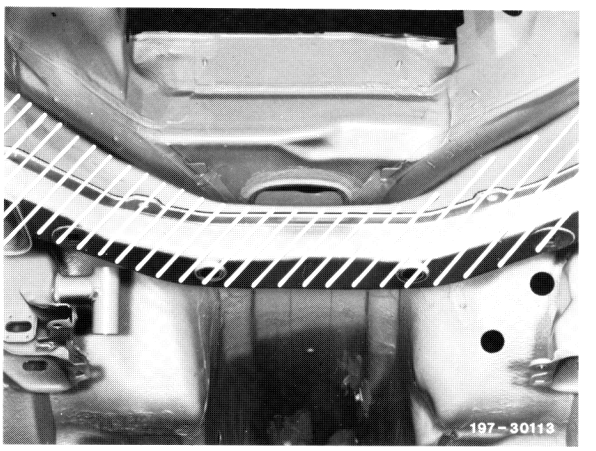

Fork carrier inside, front wall, left and right

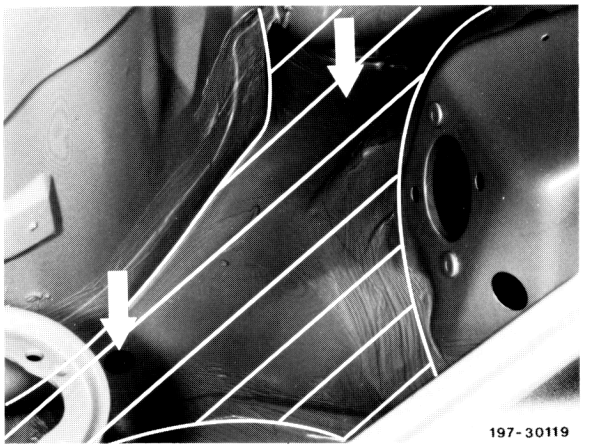

Reinforcement engine hood hinge left and right

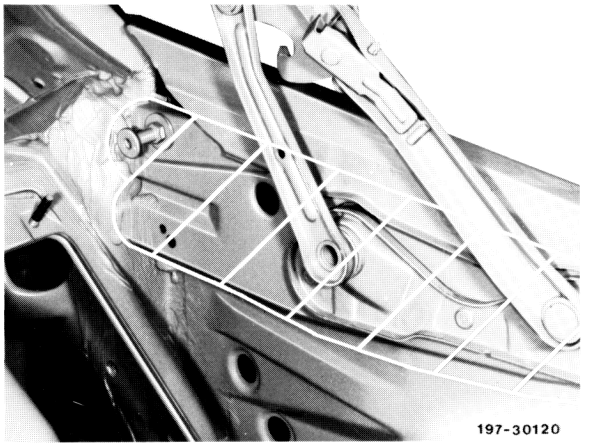

Engine carrier, axle mounts, side member, outer fork carrier, outer side member, left and right

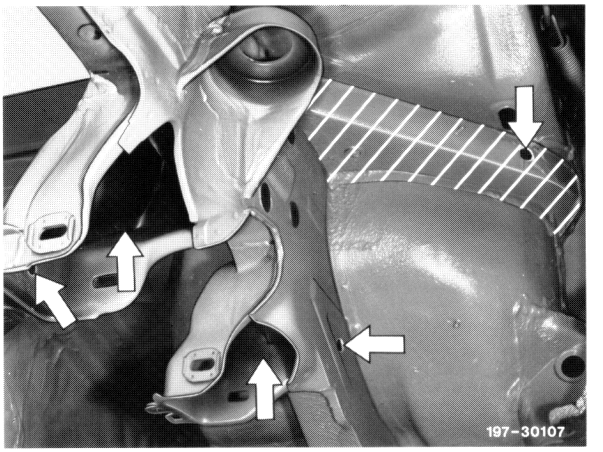

Console for intermediate steering arm, axle mount, holder for steering shock absorber

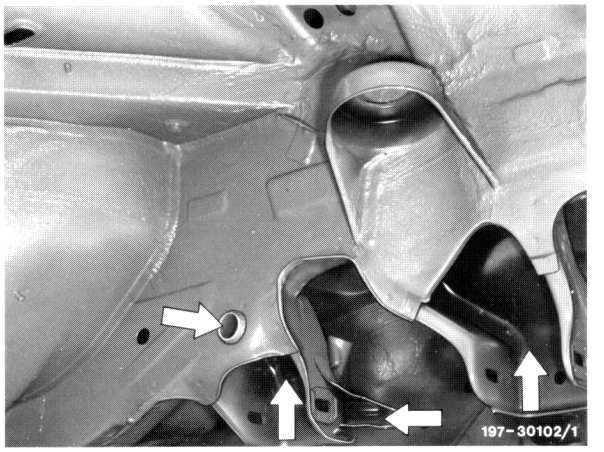

Cross member under windshield, front wall pillar in lower range, outer side member, left and right

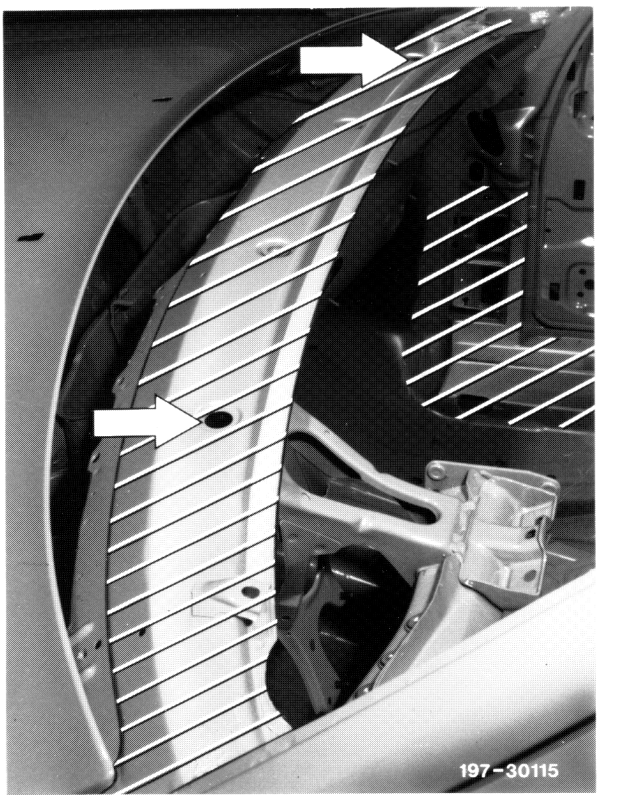

Inner connecting member, floor-tunnel carrier,left and right

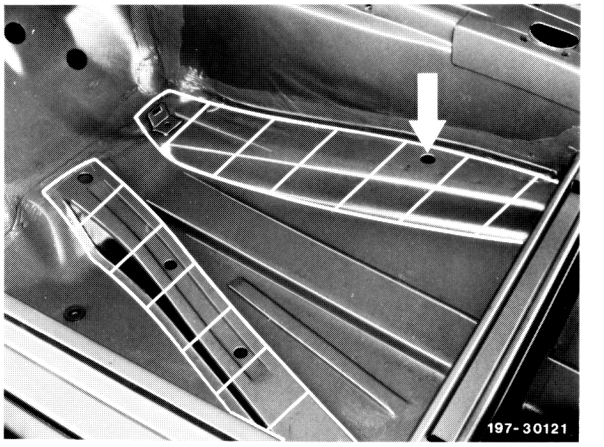

Outer side member, lower center pillar, rear side member, wheelhouse, rear fender, left and right

Side member rear: a cavity from above, a cavity laterally from inside

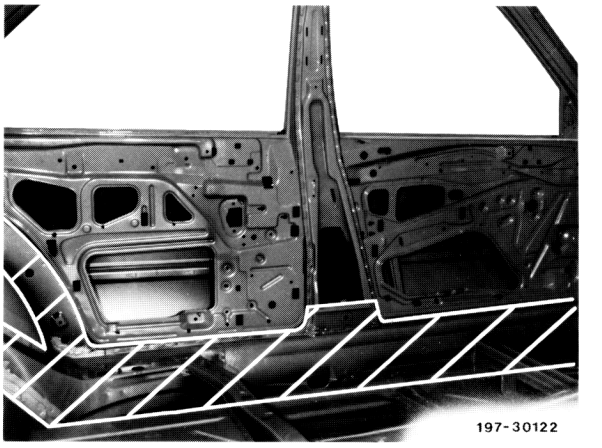

Wheelhouse, rear fender, left and right

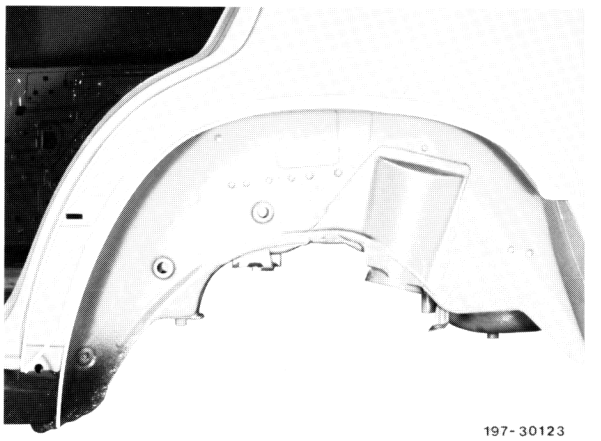

Vehicle jack tube, mount for plug (lifting platform) on floor laterally front and rear

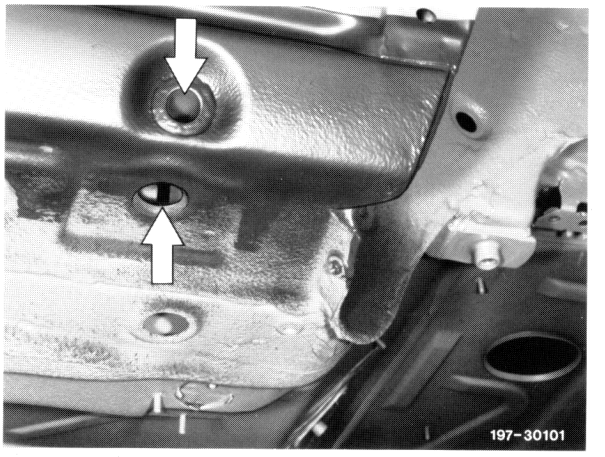

Side member, cross member above rear axle, console for axle mount, left and right

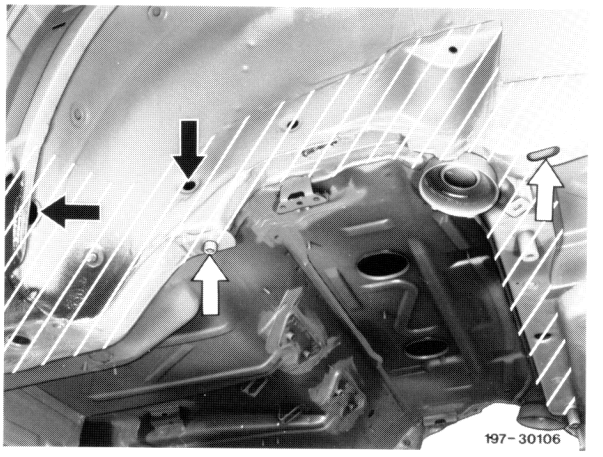

Cross member above rear axle

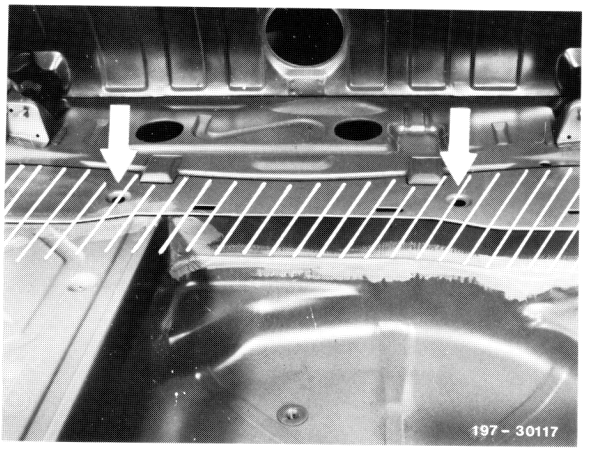

Cross member, rear

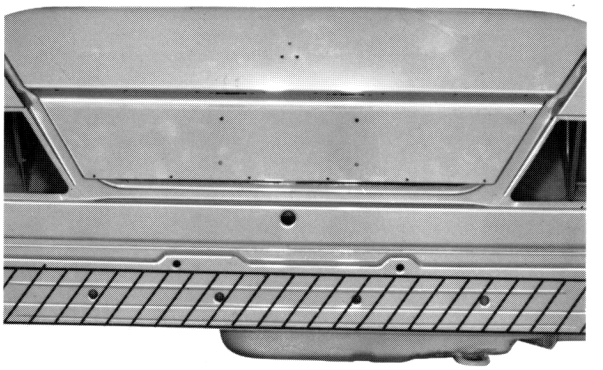

197-30118/1

Cross member rear from below, preserve entire width of bumper prior to assembly, holder for rear end muffler

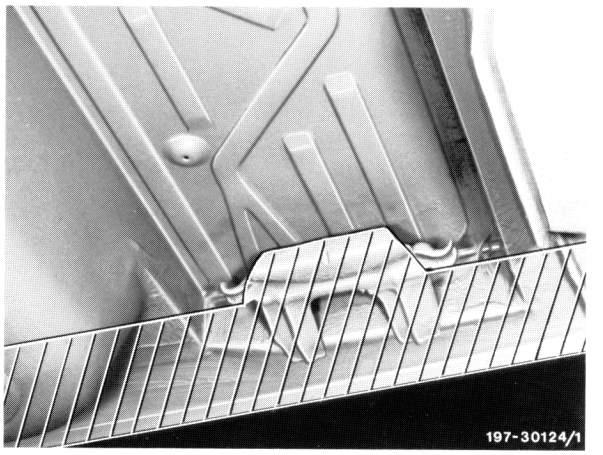

197-30124/1

T-sedan

(ranges deviating from sedan)

Cross member above rear axle, cross member rear from above and from the rear (2 cavities), rear fender rear and range at tail lamp unit, hinge range for tailgate, left and right

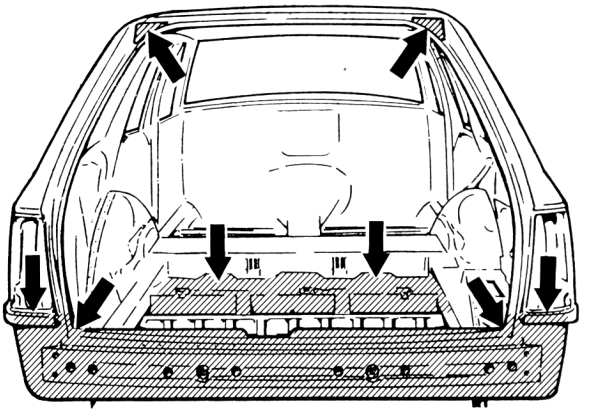

1974-13766

Preserve cross member rear from below, entire width prior to assembly of bumper, towing eye, holder for end muffler left and right

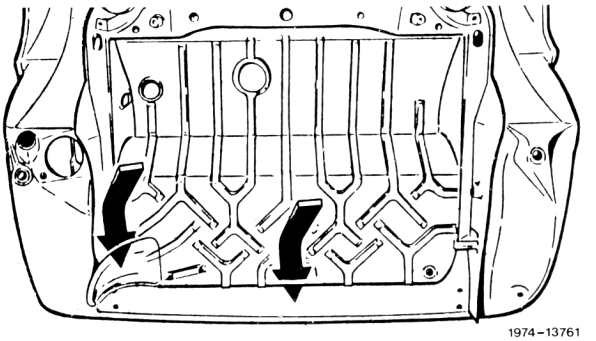

1974-13761

Convertible
(areas deviating from sedan)

Reinforcement plate on front wall in wheelhouse on left and right.

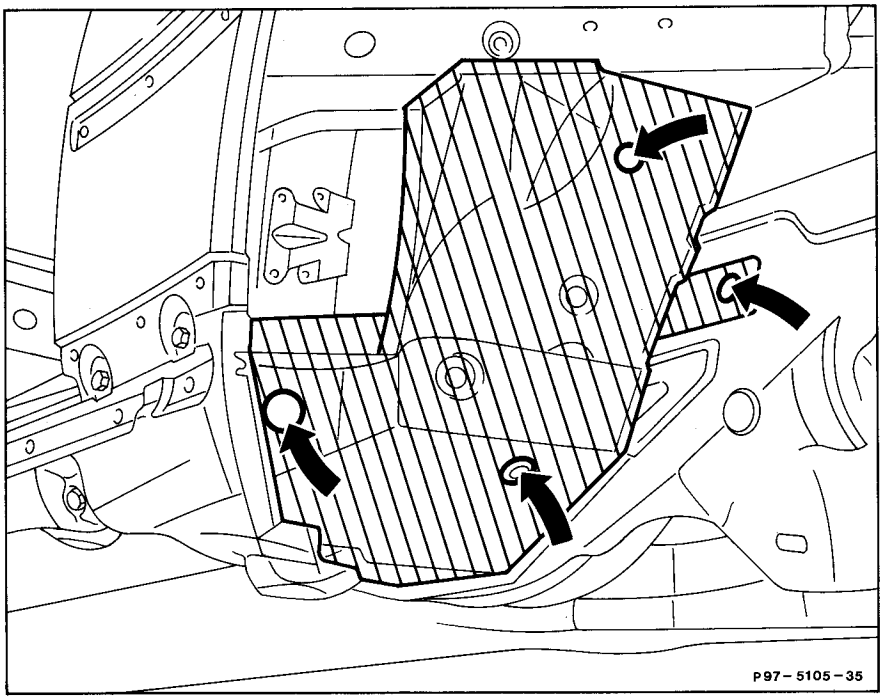

B-pillar at top and reinforcement plate in rear side wall on left and right.

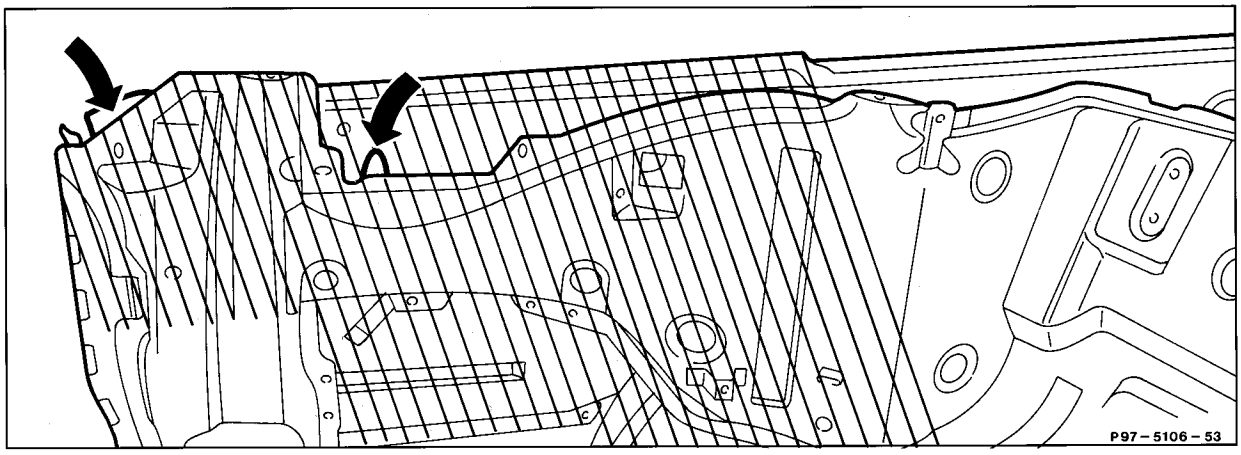

Reinforcement plate in rear side wall in area of soft top compartment – wheelhouse on left and right.

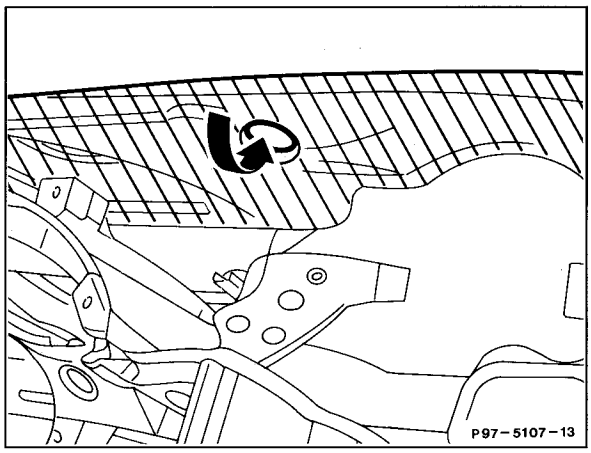

Apply wax to console on spare wheel recess from inside.

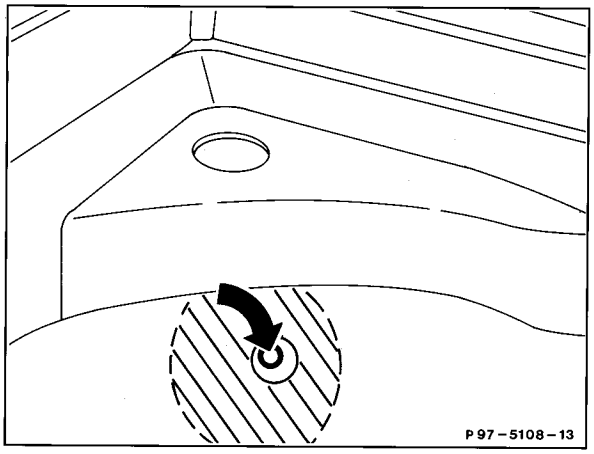

Bracket for diagonal braces

Reinforcement plate for rear frame side member above rear axle on left and right.

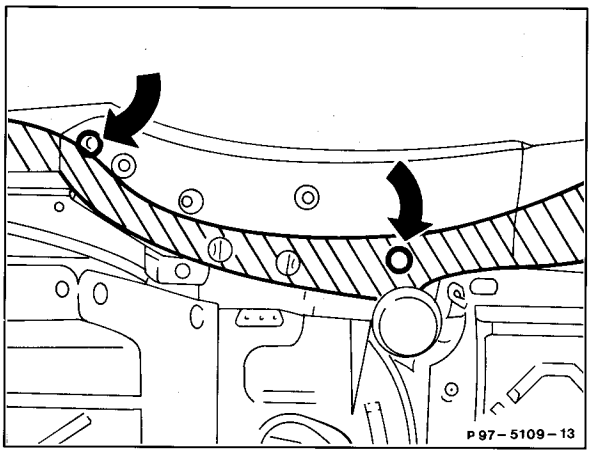

97–200 Underfloor preservation

The vehicle underside should be given a corrosion protection treatment once a year, the summer months would be best. Clean vehicle underside prior to waxing.

In the course of these jobs, repair possible damage on permanent underfloor protection, as well as paint damage on bottom edges of doors, wheelhouse edges and at entrance.

Spray preservation wax on **dry** underfloor.

Do not spray with preservation wax (cover, whenever possible):

- Brake linings and brake disks. Wax-soaked brake linings must be renewed.
- Exhaust line and muffler
- Universal shafts

After repairs following accidents be sure to preserve underfloor in repaired range.

Preserve spare bodies on underfloor upon completion of vehicles.

Note

For processing equipment and wax preservation compounds refer to 97–100.

For wax preservation compounds refer to page 385 of Specifications for Service Products. .

Prior to starting engine compartment wash and engine compartment preservation, the following measures must be performed:

Widely cover fresh air intake range, windshield glass and front fenders.

Cover screw connection of brake fluid tank, as well as the diaphragms on diesel engines with diaphragm vacuum pump with adhesive tape (pull-off adhesive tape again following engine compartment preservation).

Perform engine compartment wash on max. luke-warm engine (exhaust) depending on extent of contamination with demulsifying cold cleaner (short reaction period) and high pressure-hot water cleaning tool.

Note: Clean unit compartment behind engine compartment at slight water pressure only, using as little water as possible, If electric or electronic control units in unit compartment are wet, dry or cover before cleaning.

Perform engine compartment preservation with engine compartment dry.

Note: Prior to preservation, lubricate all bearing points of throttle control linkage (Maintenance Manual job item 3022).

Do not spray with preservation wax:

In unit compartment: Electric and electronic components, belt drive (belts and pulleys), exhaust line and muffler.

On diesel engines: Exposed piston rod of damper in throttle control linkage, bore for venting diaphragm chamber in pressure control valve on cylinder head cover of TURBO engines and engines with EGR.

Engine 601

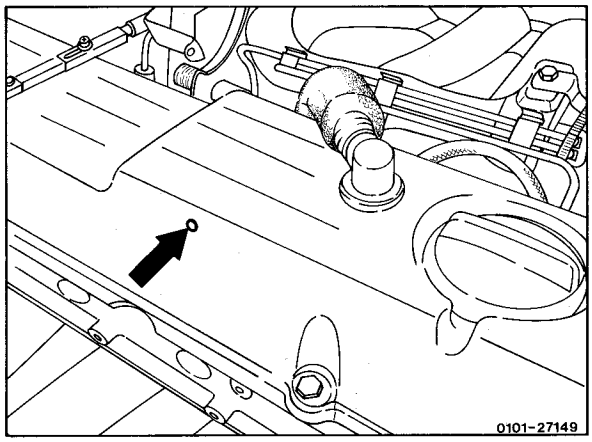

Engines 602, 603

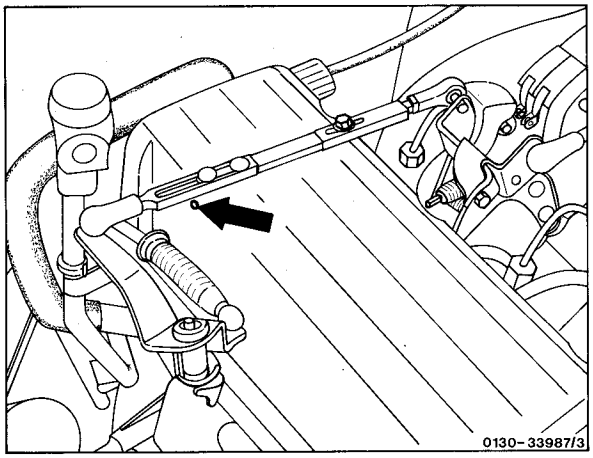

A. General information

Following body repairs, seal welding seams with material named in section **B. Sealing compounds** and protect against corrosion. This will prevent water and dirt from entering the vehicle and from penetrating welding seams.

Do not apply sealing compound on bright sheet metal. Prime welding seams first.

Also seal and paint seams and folds on sheet-metal spare parts, such as engine hood, front fender, doors, tank recess and trunk lid.

In addition to the named locations and depending on size of repairs, different sealing measures may be required, as the case may be.

B. Sealing compounds

Attention!
For sealing seams, use the following sealing compounds only:

MB universal sealing compound (black)

Tubes at 225 g	Part no. 003 989 01 71
Cartridge at 310 ml	Part no. 002 989 98 71

For sealing rubber sleeves, cable passages as well as welding seams and overlaps.

Curing time	approx. 24 hours
Shelf life	approx. 12 months at 5 to 20 °C/41–68 °F
Cleaner	benzine

MB universal sealing compound is also suitable for glueing glass, metal, wood, fabric, cardboard and the like.

Following use, make sure to close open nozzle tip of cartridge with MB universal sealing cord to prevent early drying-out.

MB body sealing compounds
(can be painted over)

Cartridge at 310 ml Part no. 001 989 63 20

For weld seams, overlaps and the like. Can be painted over after drying.

Shelf life	approx. 6 months
-cleaner	benzine **no paint thinner or liquid containing alcohol**

An open cartridge will last only a few days and should be used up immediately, whenever possible.

MB sealing cord (5 mm dia., black)

Spool at 28 m Part no. 001 987 56 46

As shim between body parts

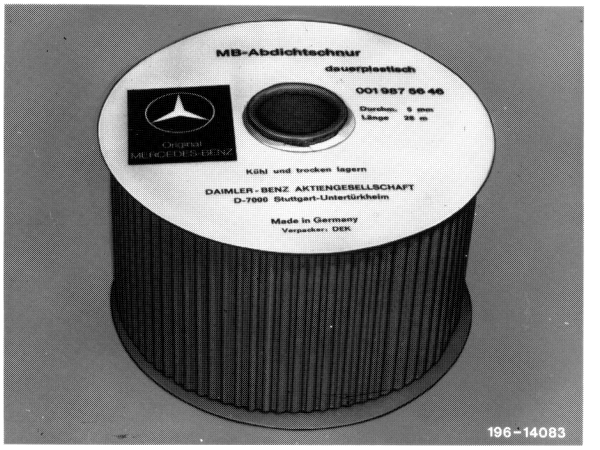

C. Sealing seams in front end area

Engine hood front and laterally, left and right

Engine hood laterally, left and right

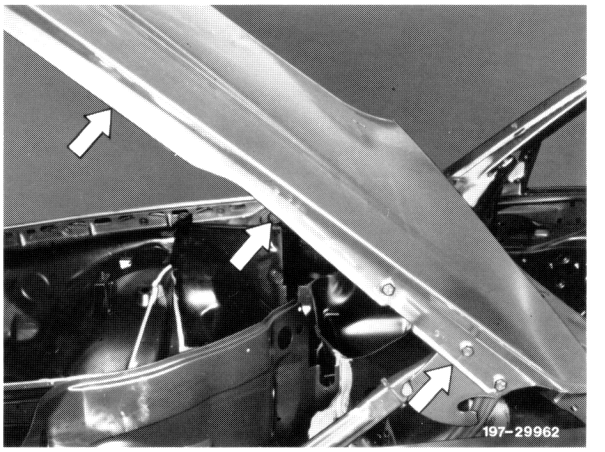

Engine hood rear, entire bead, left and right

Front fender at front, turnsignal lamp cutout

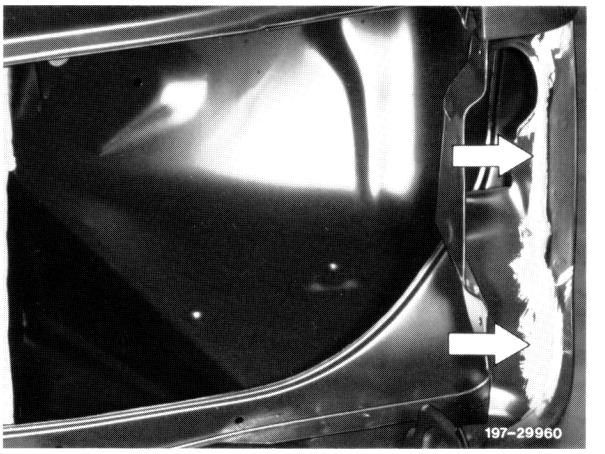

Front fender at front, turnsignal lamp cutout, underside

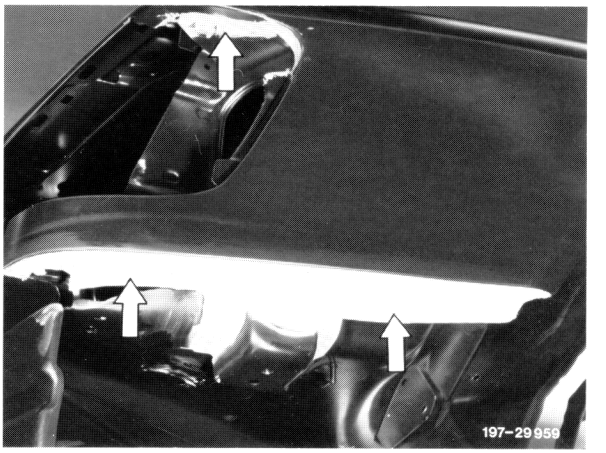

Side member, cross member front

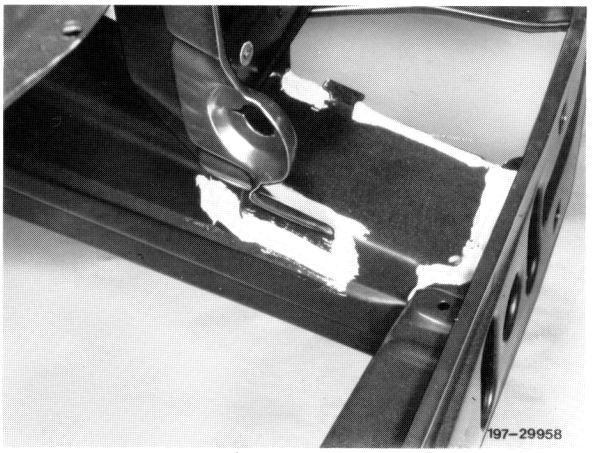

Wheelhouse, side member, cross member for front axle, bulkhead, left and right

Note: Leave water drain (arrow) clean.

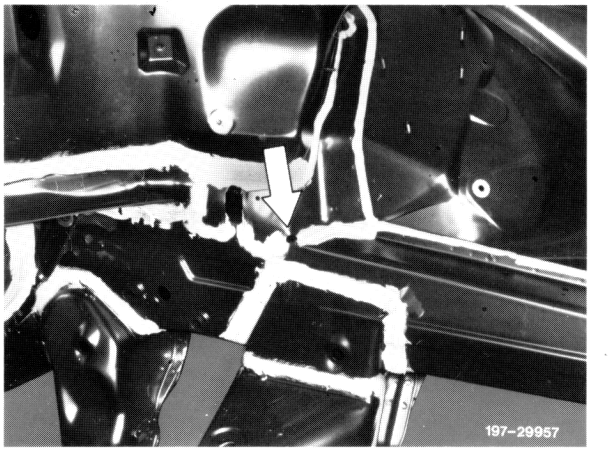

Damper mandrel, inner connecting carrier, bulkhead, front wall, left and right

Holder for battery

Wheelhouse, front wall, left and right, console for pedal system

Cutout for heater on front wall all-around

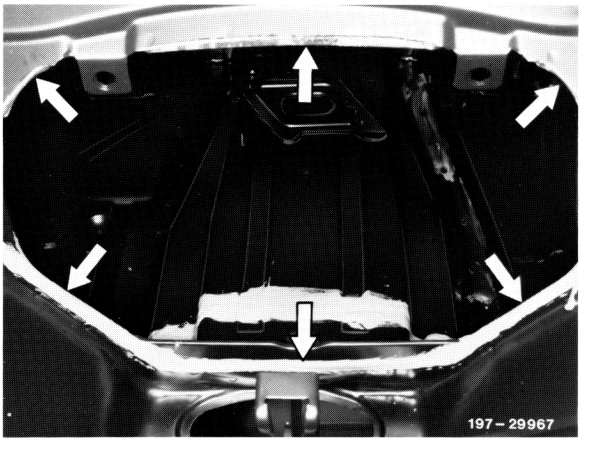

Bulkhead, inner connecting carrier, front wall

Side member, inner connecting carrier, front wall, floor left

Note: Leave water drains on connecting carrier inside clear.

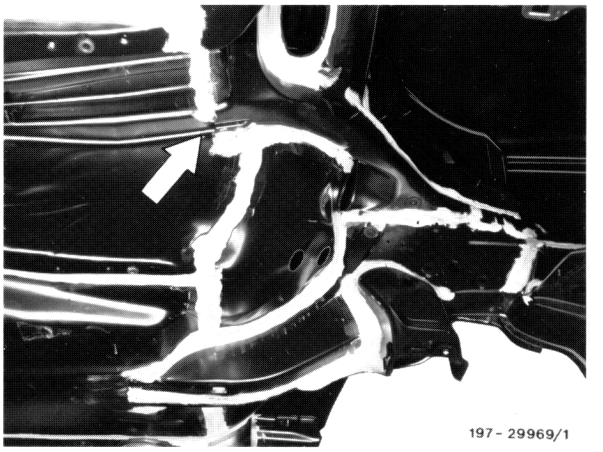

Side member, inner connecting carrier, front wall, floor right, console for intermediate steering arm

Note: Leave water drains on connecting carrier inside clear.

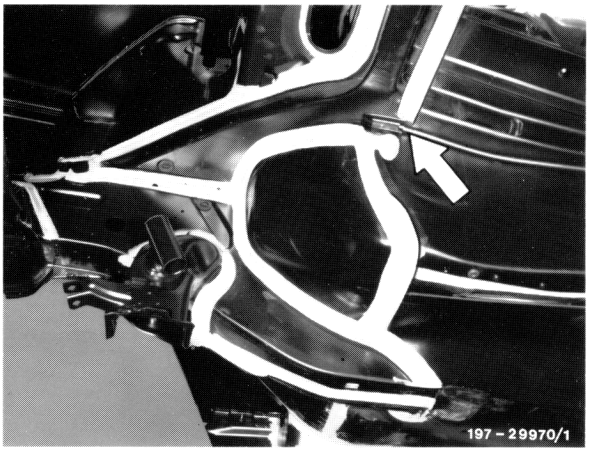

Side member front, wheelhouse, outer connecting carrier, front wall, left and right

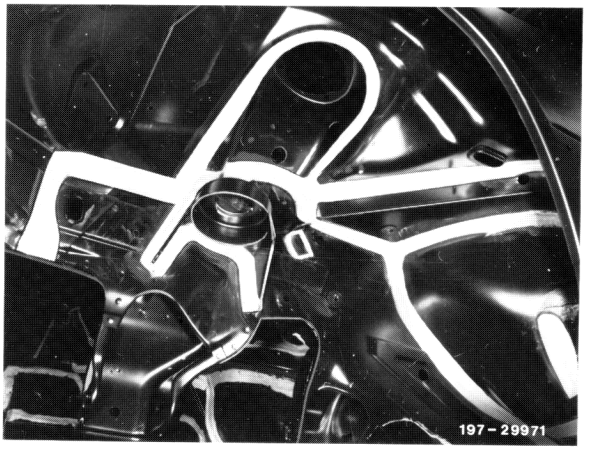

Side member front, outer connecting carrier, front wall, outer side member, floor left and right

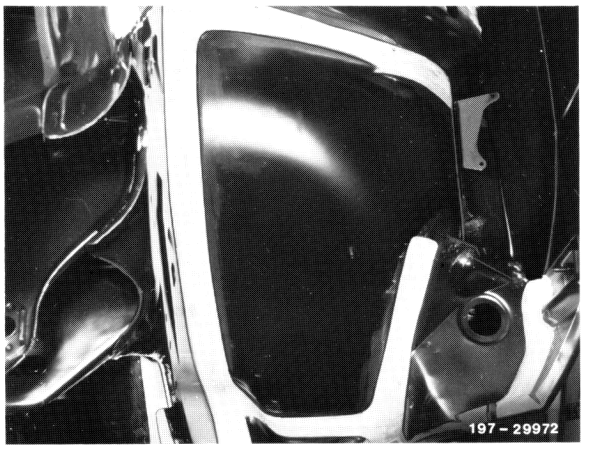

Side member front, front wall, floor left and right

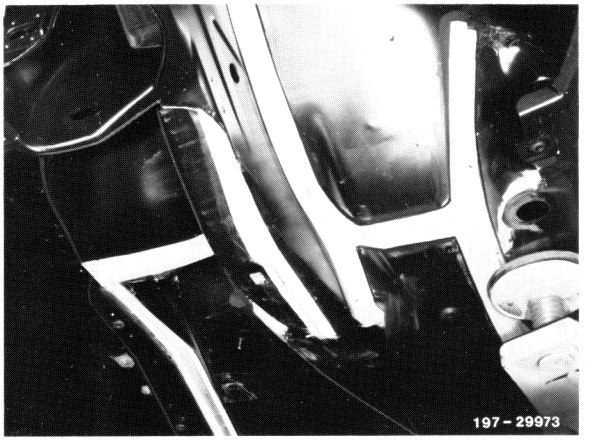

Wheelhouse, outer connecting carrier, front wall pillar

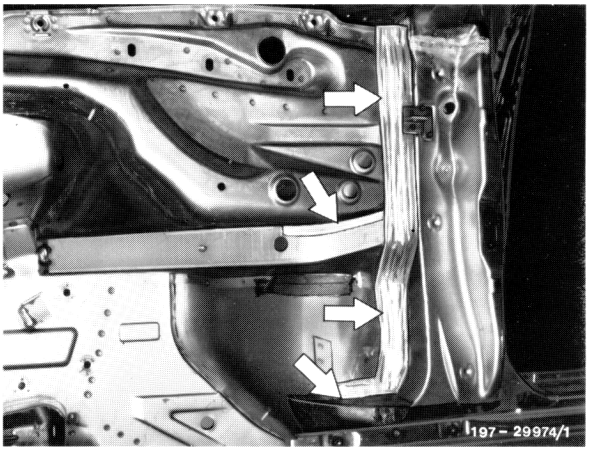

Front wall, front wall pillar, cross member under windshield, floor, tunnel inner connecting carrier, left and right

Front wall, inner connecting carrier, tunnel, floor, bearing for accelerator pedal

Front wall pillar, cross member under windshield

Note: Smooth down sealing with filler or the like.
Driver's door front, cutout for outside mirror.

D. Sealing seams in door area

Driver's door front, bead, holding rail, cutout for outside mirror

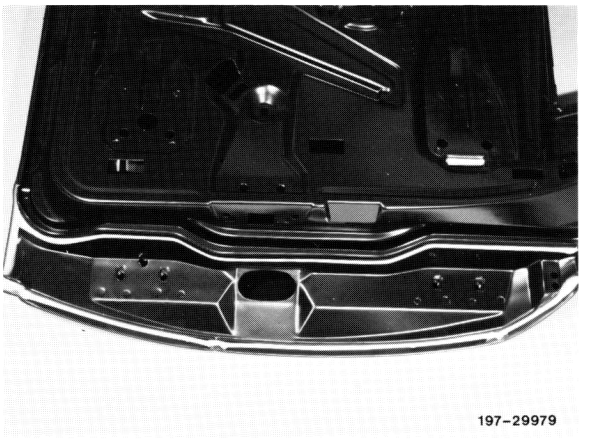

197-29979

Driver's door rear, bead, holding rail

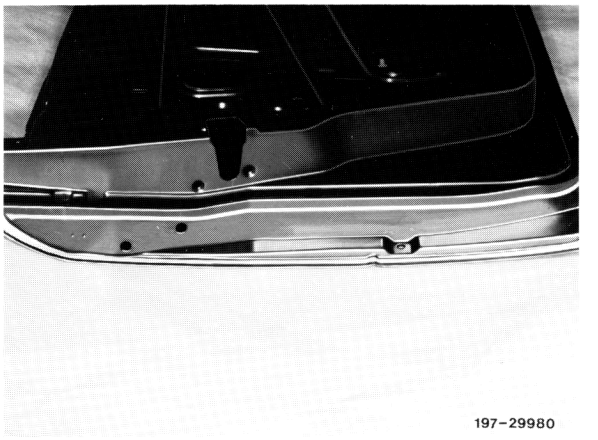

197-29980

Rear door front, bead

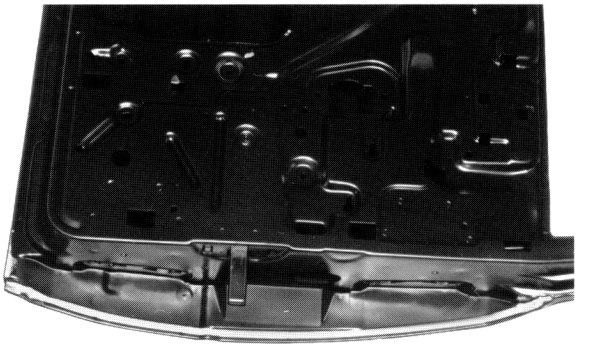

197-29981

Rear door rear, bead, holding rail

Front wall pillar, side member, driver's door, below

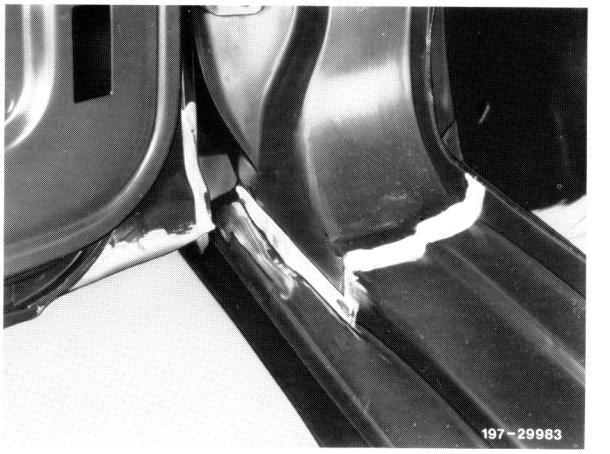

Front wall pillar inside and top

Note: Smooth down sealing with filler or the like

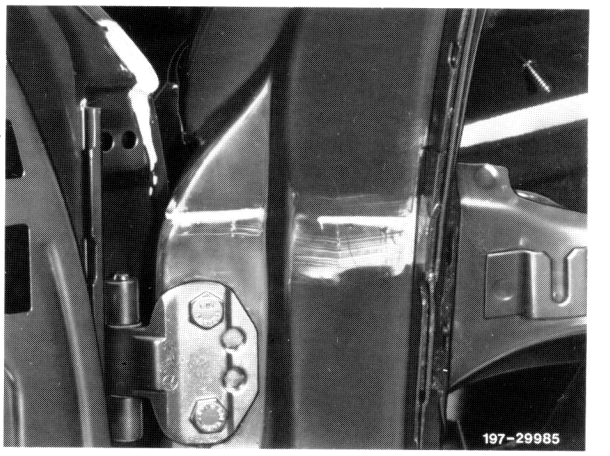

Side member, center pillar, hinge front door top and bottom

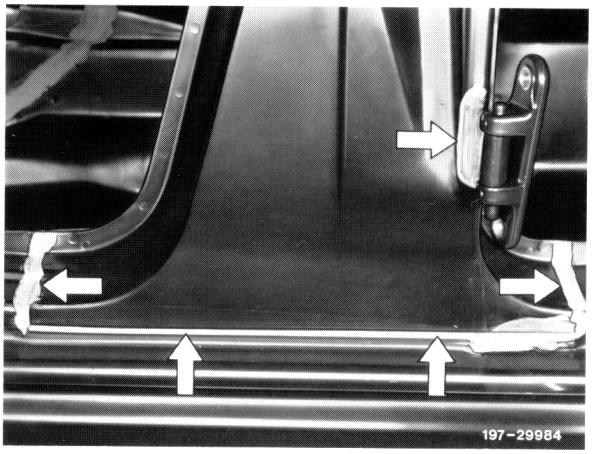

Side member, rear fender

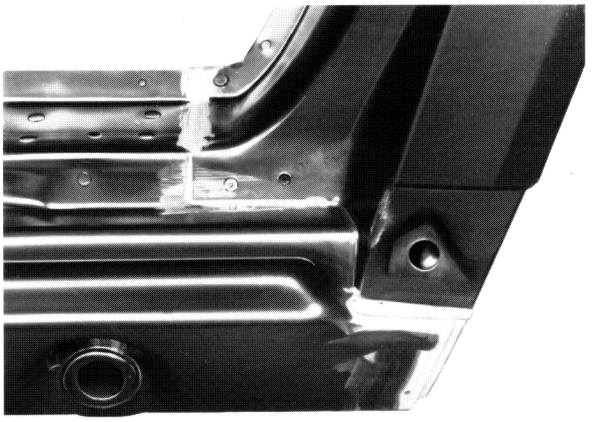

197-29987

Floor, tunnel, cross member under driver's seat, console for brake cable

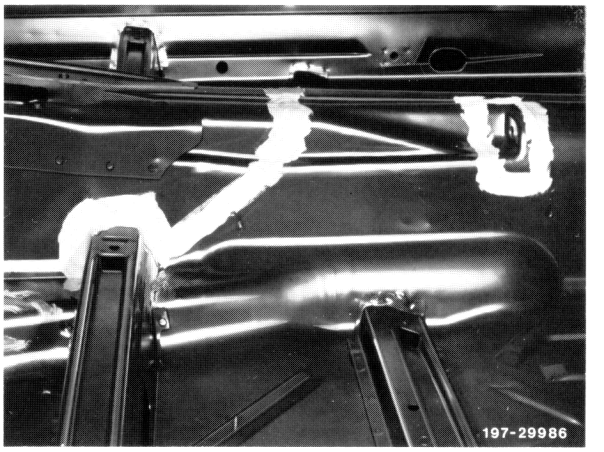

197-29986

Cross member under rear seat, floor, side member inside and rear, wheelhouse rear, bulkhead

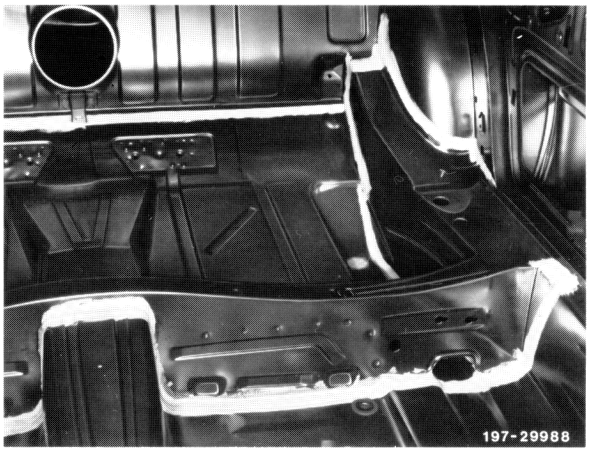

197-29988

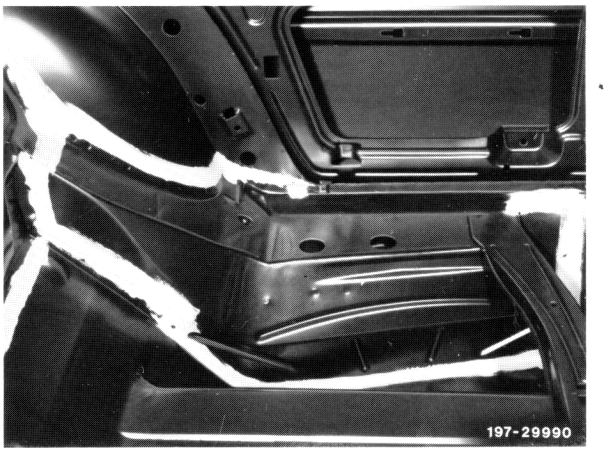

197-29990

Floor, tunnel, console for brake cable, weld nuts for shift bracket

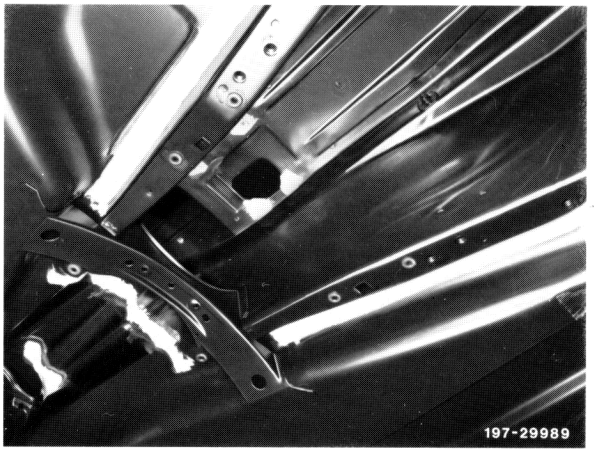

Roof panelling center, roof panelling laterally

Note: Apply sealing material only as thick as necessary, so that the space for the plug-in clips is not narrowed down.

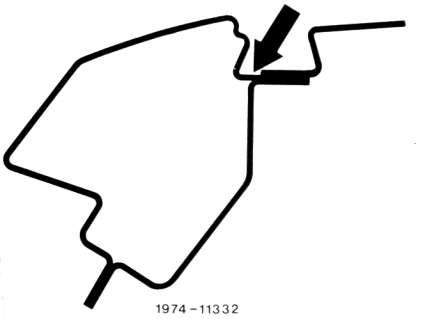

Bead between roof panelling and sun roof stiffening frame all-around

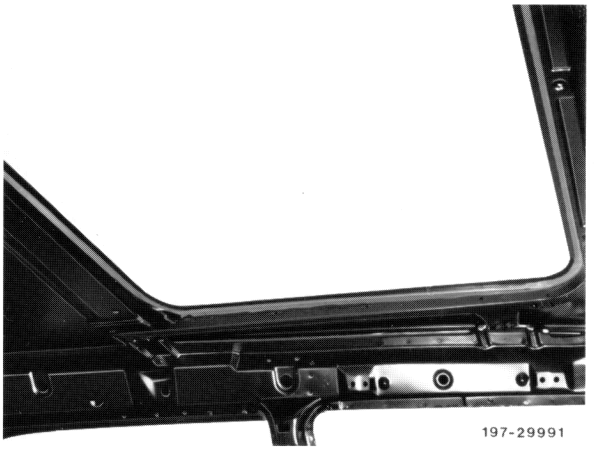

Cover for sun roof at roundings

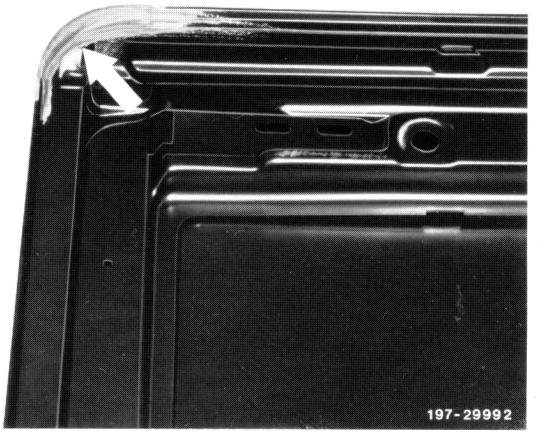

E. Sealing seams at rear end

Sedan

Bead on trunk lid all-around

Note: Close paint run-off bores (arrows) with plugs

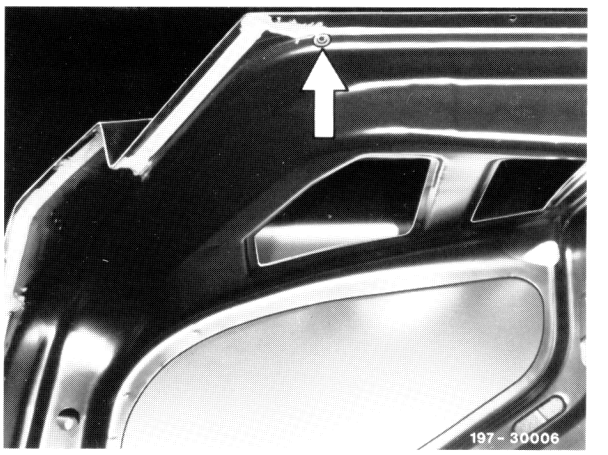

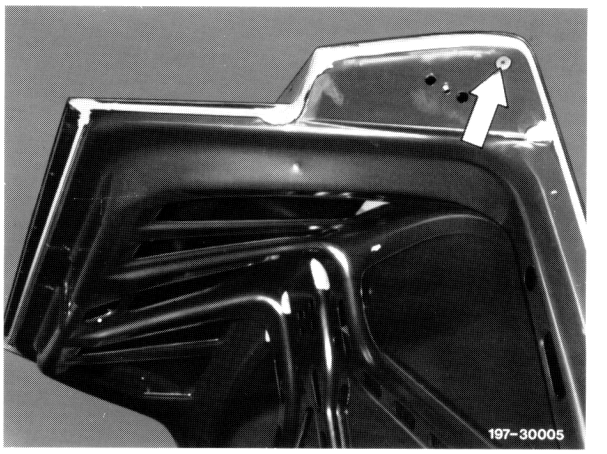

Cutout for back window top and laterally left and right

Rear fender, roof left

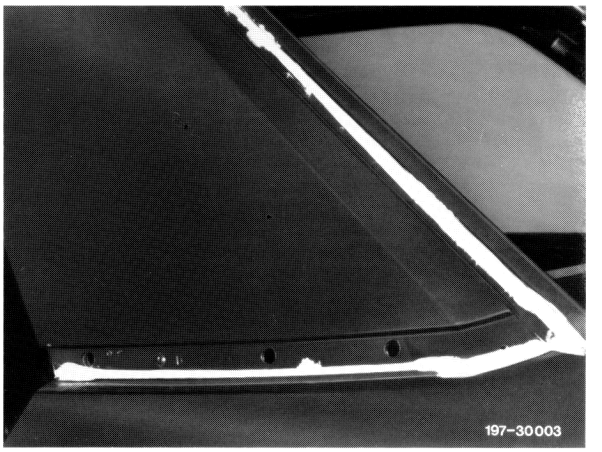

Rear fender, roof right, tank recess all-around

Wheelhouse side member, rear end floor, spare wheel recess left and right, cross member above rear axle

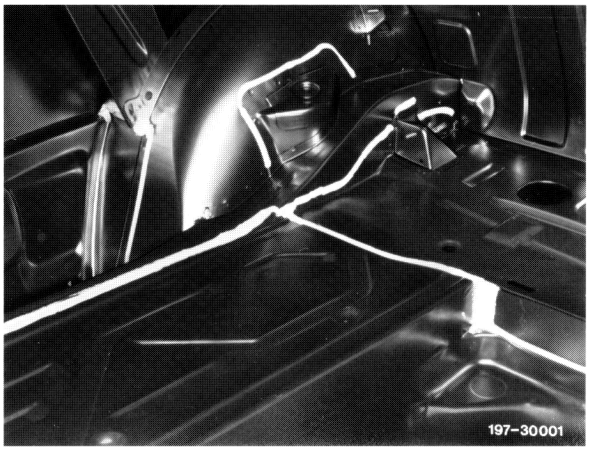

Wheelhouse, rear fender, spare wheel recess left and right

Spare wheel recess, side member, rear center piece left

Spare wheel recess, side member, rear center piece right

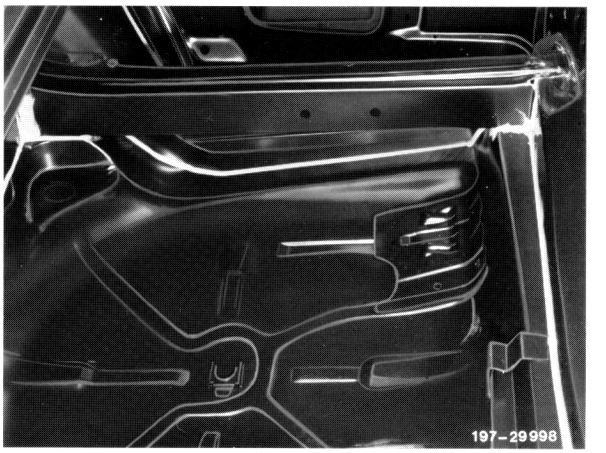

Rear end floor laterally, cross member, side member, spare wheel recess left and right

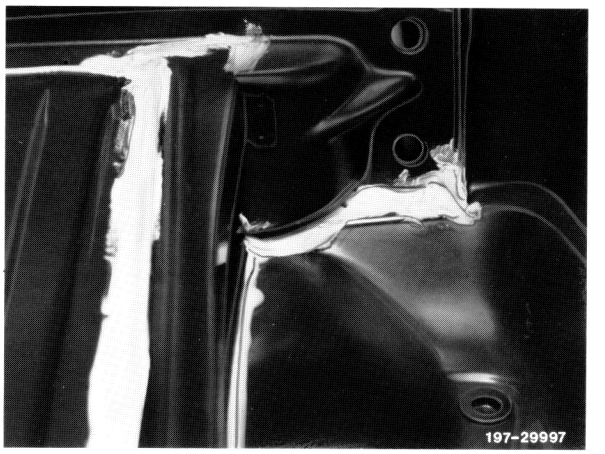

Wheelhouse, rear end floor laterally, side member, rear end floor, floor above rear axle, cross member

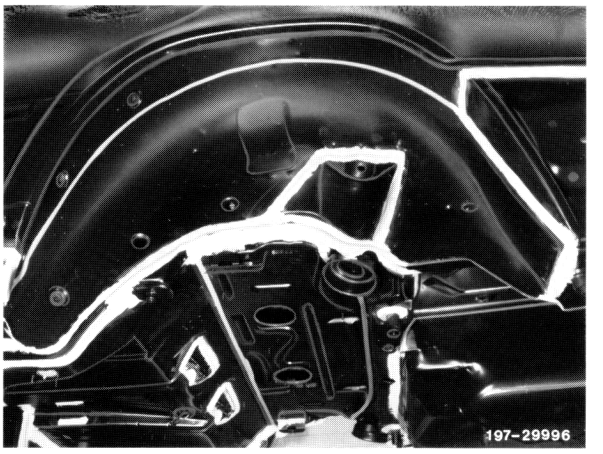

Floor, cross member under rear seat, rear end floor, floor above rear axle, plates for seat belts, consoles for rear axle, cross member above rear axle

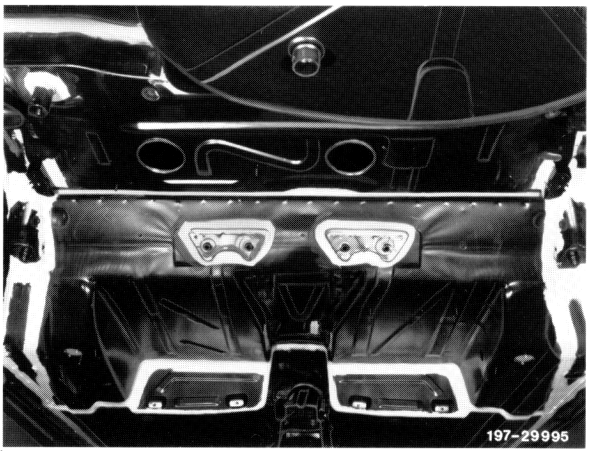

Floor above rear axle, cross member above rear axle, side member, spare wheel recess, wheelhouse, rear end floor laterally

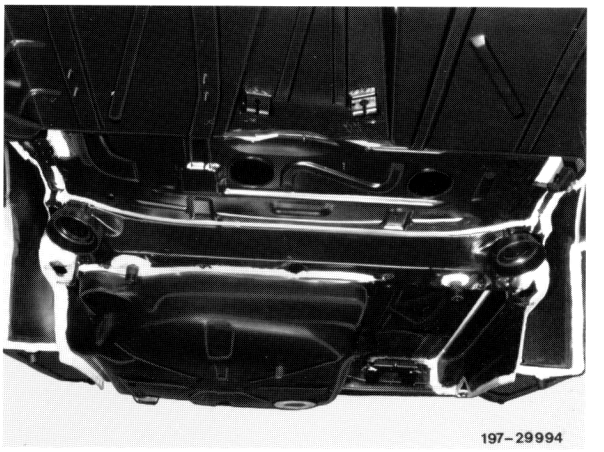

Side member, rear floor laterally, rear fender, spare wheel recess, cross member, holder for end muffler

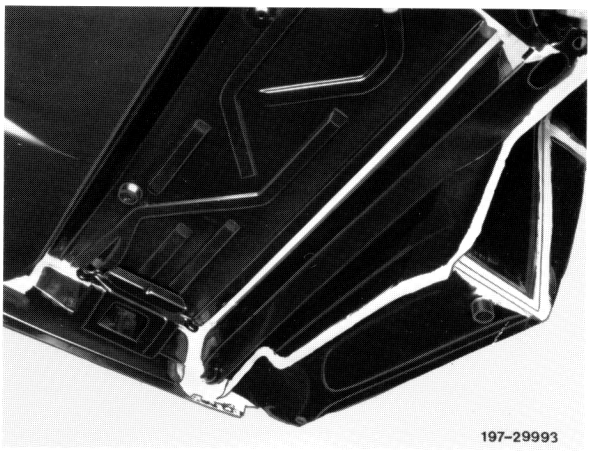

Rear center piece, cross member, side member, spare wheel recess, towing eye, paint run-off hole

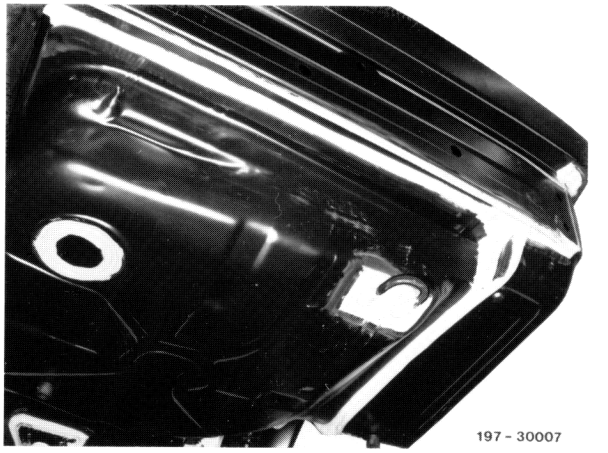

T-sedan

(ranges deviating from sedan)

Rebate on tailgate all-around

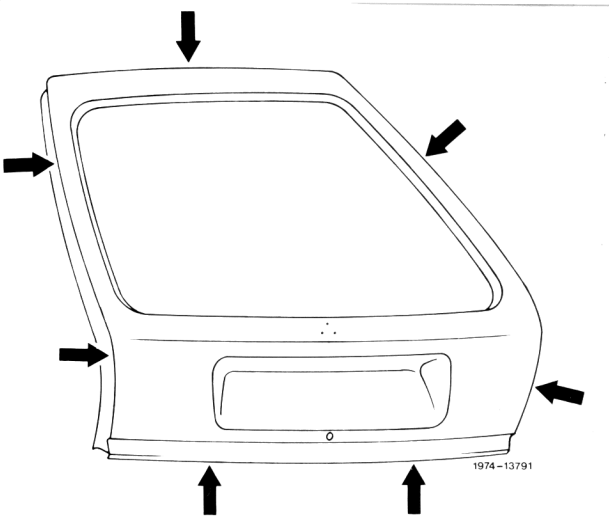

Rear floor

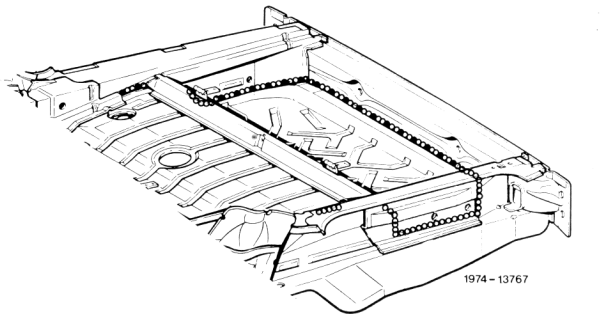

Rear fender inside and outside, tank recess all-around

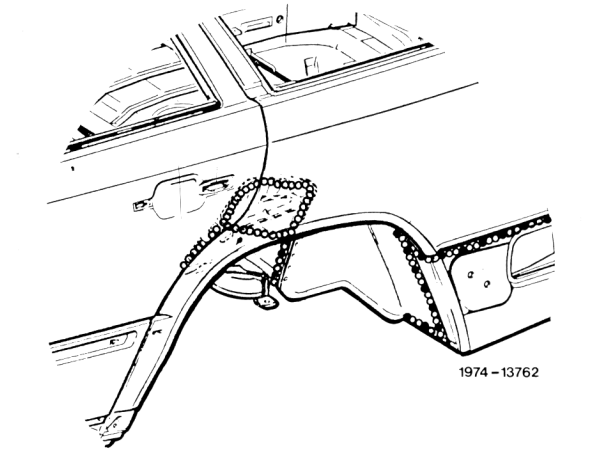

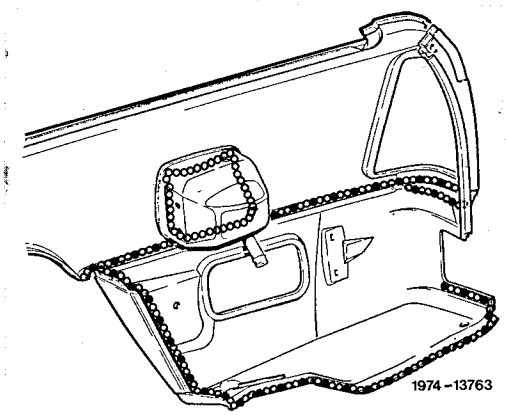

Hinge range at tailgate, cross member rear

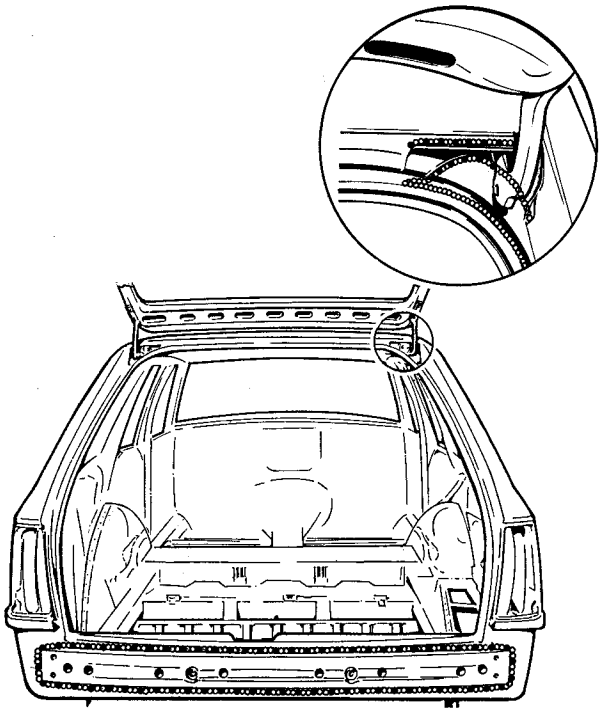

Rear floor, rear fender, cross member above rear axle, rear cross member

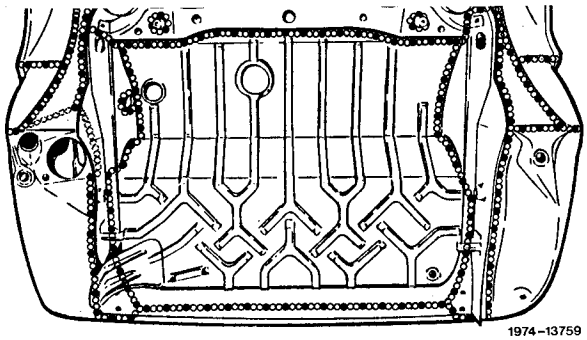

F. Convertible (areas deviating from sedan).

Reinforcement plate on front wall in left and right wheelhouse.

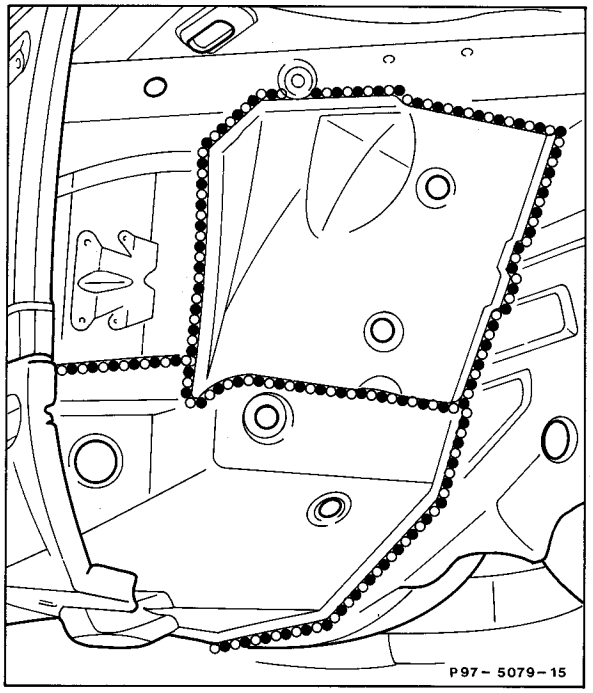

Reinforcement plate on frame side member in left and right wheelhouse.

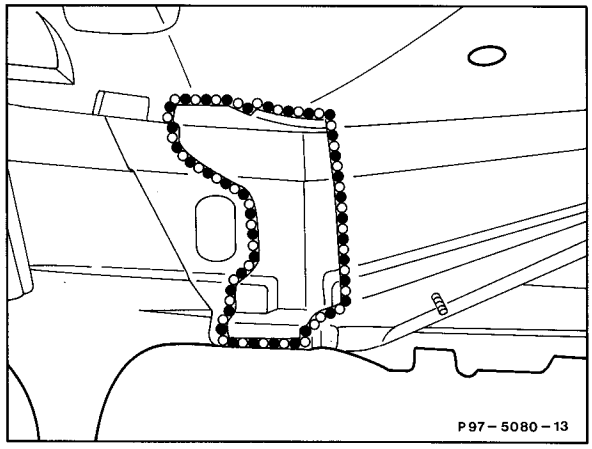

Reinforcement plate on frame side member in engine compartment on left and right.

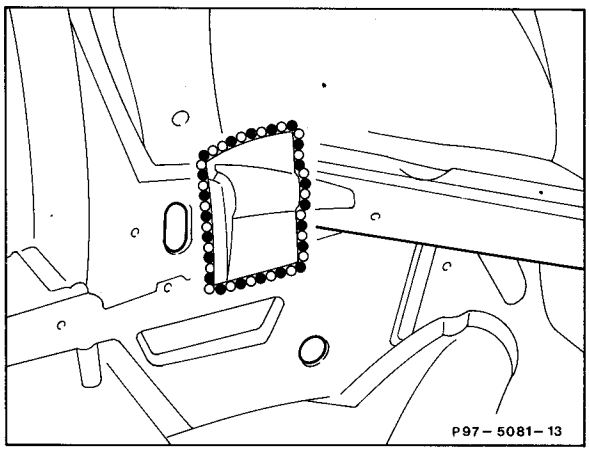

Reinforcement plate on inside on floor - front wall - tunnel on left and right.

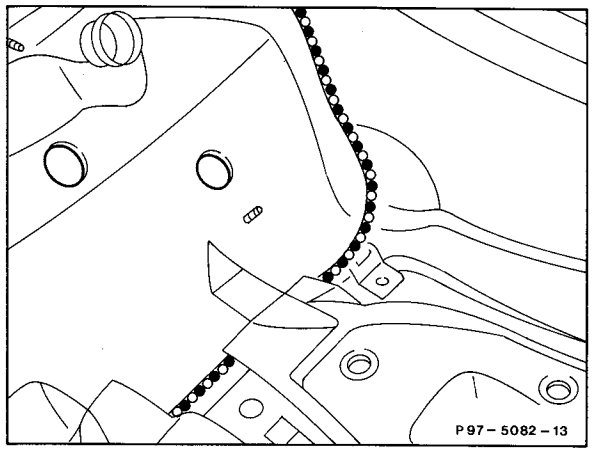

B-pillar wheelhouse - rear area, inside left.

B-pillar at top (arrow), seal seam from inside.

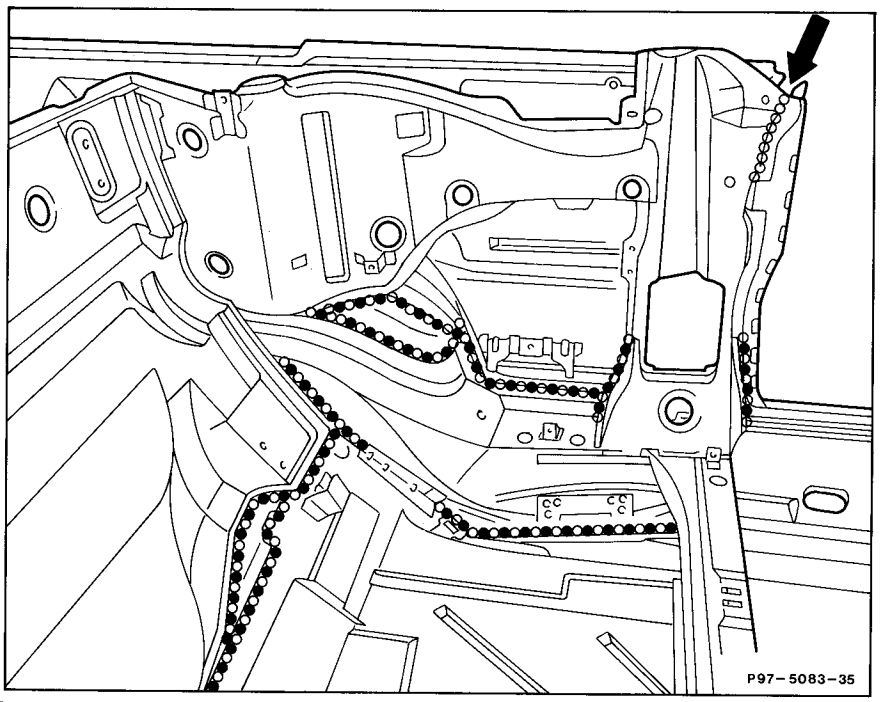

B-pillar wheelhouse - rear area, inside right.

B-pillar at top (arrow), seal seam from inside.

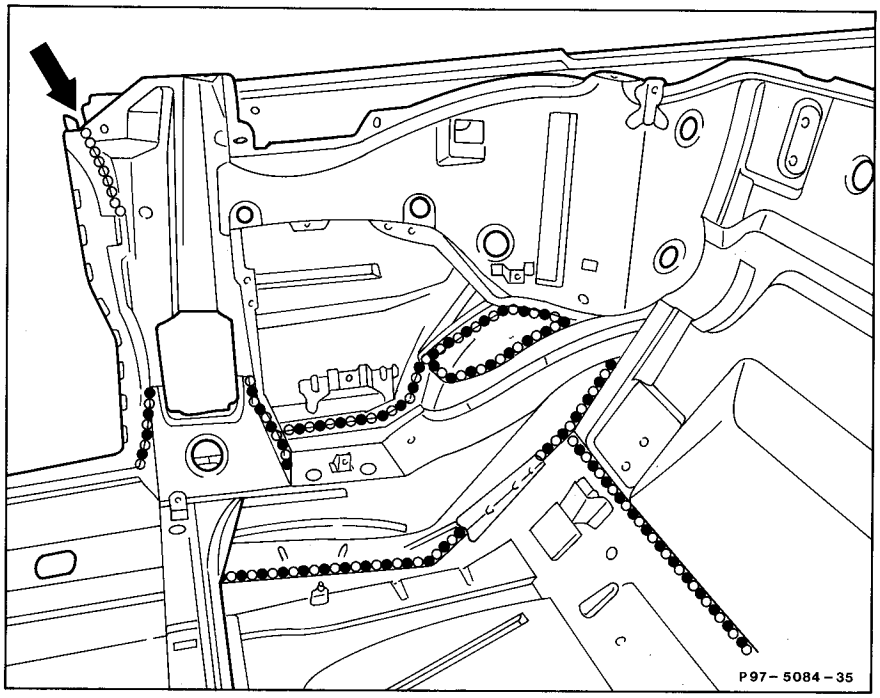

Soft top main mount - side wall, left and right.

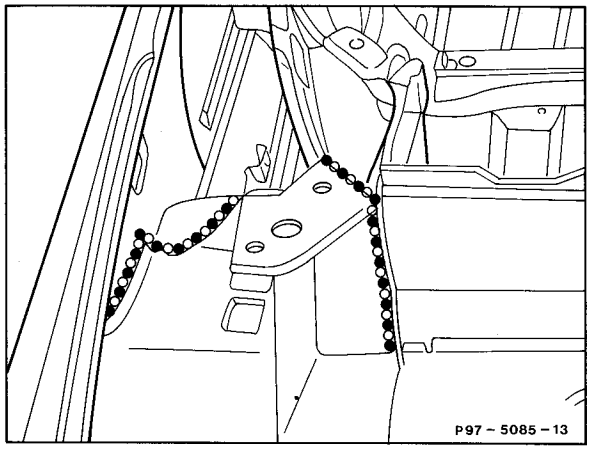

Left trunk recess.

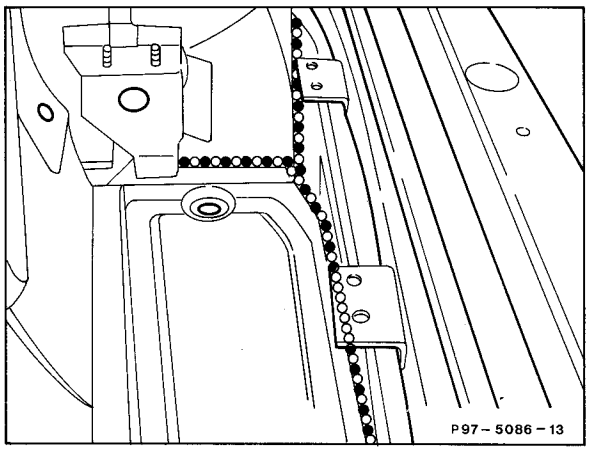

Right trunk recess.

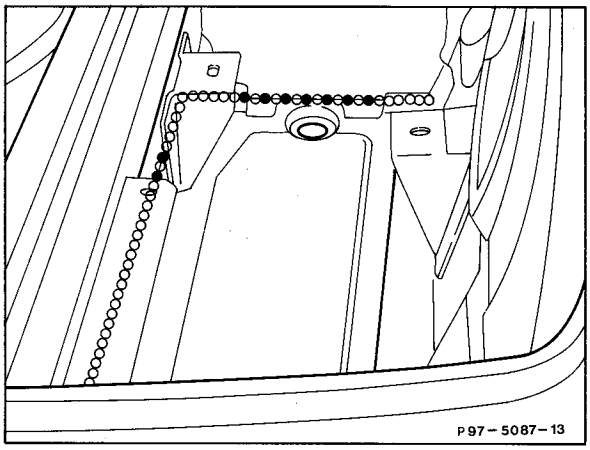

Wheelhouse, inside right, spare wheel recess inside right.

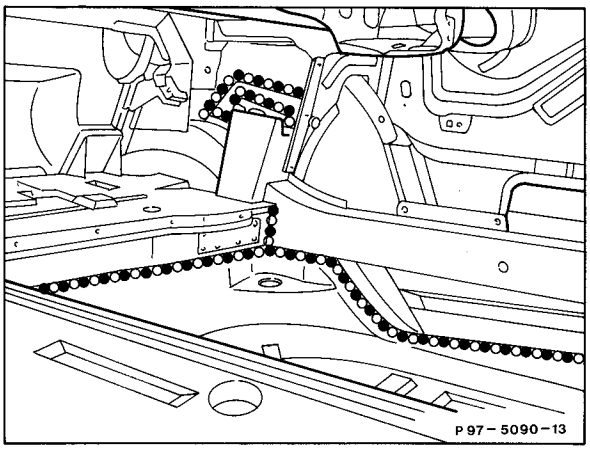

Wheelhouse, inside left, trunk floor. Spare wheel recess inside left.

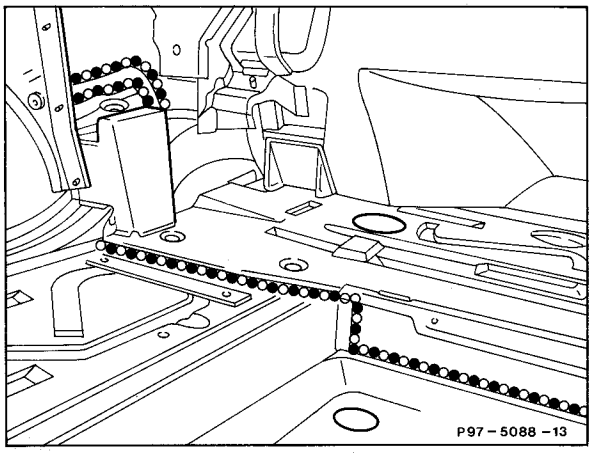

Rear console on floor assembly for diagonal struts.

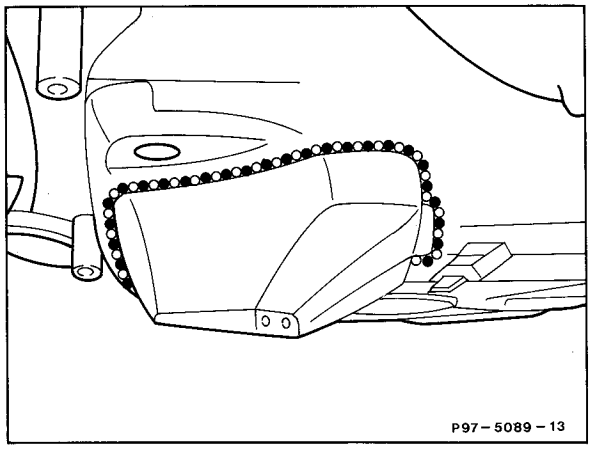

Connecting seam between roof frame and A-pillar on left and right.

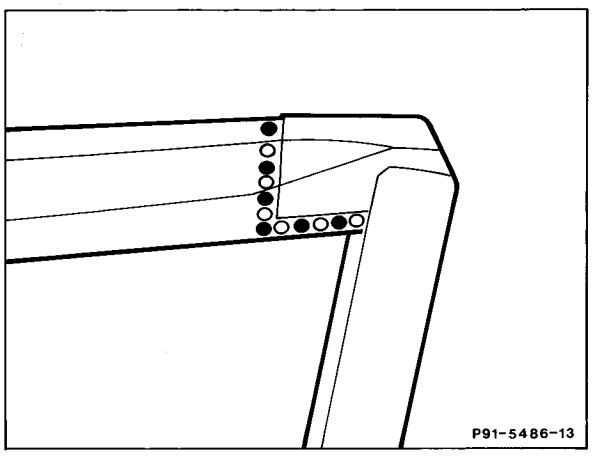

A. General

Clean all surfaces that are intended for being provided with a permanent underfloor protection on principle, mainly remove any wax and oil residues, and loose PVC particles – even at transitions to former permanent underfloor protection.

Following application of permanent underfloor protection, paint the areas within range of vision in the vehicle color – in galena grey within range of entrance.

In case of damage to the underfloor protection, grind the corroded spots to a bright finish, pretreat them with MB-2K primer and then coat them with bright MB permanent underfloor protection.

Attention!
Do not spray permanent underfloor protection on individual units.
Following body repairs, seal weld seams and overlaps on underfloor prior to spraying permanent underfloor protection (97–400).

B. Permanent underfloor protection material

MB permanent underfloor protection – (synthetic rubber)

Processing data

Container	one-way screw-type can at 1 liter, part no. 000 989 20 21
Color	light beige
Shelf life	approx. 6 months at 20 °C
Processing temperature	15–20 °C/59–68 °F
Spraying pressure	3.5–5 bar
Thickness of layer	0.8–1 mm dry film or approx. 2 mm wet film
Drying time	4–6 hours at 20 °C/68 °F 45 minutes at 80 °C/176 °F Top coat can be applied at end of drying period.
Dangerous materials class	A II
Solvent or cleaner	benzine

Processing unit

	Spray gun for screw-type cans, e.g. Teroson record spray gun, item no. 106 84 N

Note: The bright MB permanent underfloor protection is made on synthetic rubber basis and suitable for application on the underfloor, to the inner side of fenders as well as for sealing jobs. This material alone can be used at transitions to the PVC permanent underfloor protection applied ex factory.

MB permanent underfloor protection (dispersion soluble in water)

Processing data

Container	one-way screw-type can at 1 kg each,	part no. 001 986 46 10
	canister at 30 kg each,	part no. 001 986 01 10
Color	grey	
Shelf life	6 months at 20 °C/68 °F. Protect against frost.	
Processing temperature	approx. 20 °C/68 °F	
Spraying pressure	3–4 bar	
Thickness of layer	0.8–1 mm dry film or approx. 2 mm wet film	
Drying time	up to 5 hours at approx. 20 °C/68 °F (depending on thickness of layer)	
	15–30 min at 70–80 °C/158–176 °F	
Dangerous materials class	not applicable	
Solvent or cleaner	water	

Processing equipment

For 1-kg one-way screw can	spray gun for screw-type cans, e.g. Teroson-record- spray gun, item no. 106 84 N	
For 30 kg canister		
a) Pressure vessel	paint pressure	3–4 bar (at.)
	atomizer pressure	3–4 bar (at.)
	spray jet	3–4 mm
	Hose dia. inside min. 20 mm	
b) Airless unit	spray pressure	100–250 bar (at.)
	spray jet	0.4–0.6 mm

Note: This material is not suited for sealing jobs at welding seams and overlaps as well as on transitions of the PVC permanent underfloor protection applied ex factory.

If the MB permanent underfloor protection is intended for application to the outer skin as well, dilute the material by 5 % of water in order to obtain better flow characteristics. MB permanent underfloor protection can be sanded wet after drying. It is particularly suited for the underfloor, the inner sides of fenders and the entrance range at the main floor.

The MB permanent underfloor protection quickly will get dry-struck to become a solvent-resistant film. For this reason, place the paint-spray gun into water during interruptions and at the end of the job performed. Prior to re-using, coat air cap with mineral oil in order to prevent the spray from drying out.

Spray can be removed from the body by means of a moist cloth, even after up to 10 minutes. If the drying time is still somewhat longer, add approx. 0.5 % of a dish washing agent. After approx. 1 hour, the spray can only be removed by sanding paper, grain P 1200, and subsequent polishing.

Clean the appliances used for this work with water after termination.

C. Processing on body

Sedan

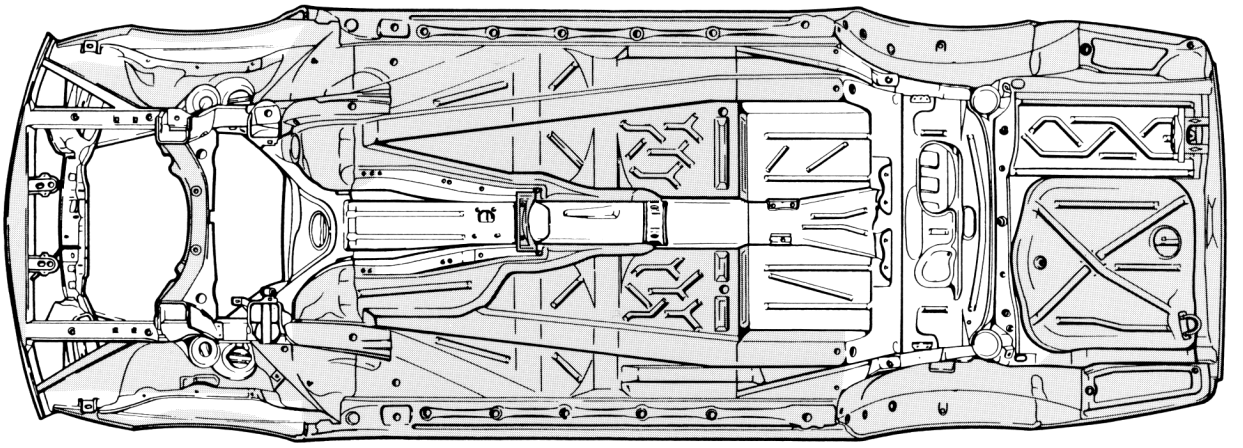

1973 - 12 909

Bright range = coated
Dark range = uncoated

Note: Do not coat fastening points for axle components, spring plate inside, bores for fastening steering gear and threads for fastening axle (dark range).

T-sedan

(ranges deviating from sedan)

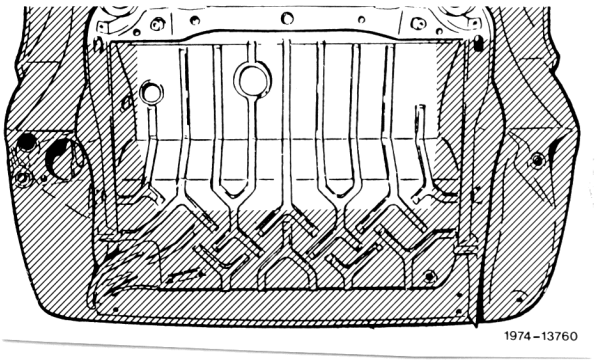

1974–13760

Attention!
For sealing jobs on our bodies, only the following sealing compounds may be used.

MB universal sealing compound (black)

Tube, 225 g Part no. 003 989 01 71

For sealing rubber sleeves, cable passages, as well as welding seams and overlaps. Also for sealing glued-in glass.

Curing time	approx. 24 hours
Shelf life	approx. 12 months at 5 to 20 °C/41 to 68 °F
Cleaner	benzine

MB universal sealing compound is also suitable for glueing glass, metal wood, fabric, cardboard and the like.

Close opened nozzle tip of cartridge after use with MB sealing cord. This will prevent early drying out.

MB body sealing compounds
(can be painted over)

Cartridge, 310 ml Part no. 001 989 63 20

197 - 25596

For weld seams, overlaps and the like.
Can be painted over after drying.

Shelf life	approx. 6 months
Cleaner	benzine **no paint thinner or liquids containing alcohol**

An open cartridge will last only a few days and should be used up immediately, whenever possible.

MB sealing cord (5 mm dia., black)

Spool, 28 m Part no. 001 987 56 46

As shim between body parts.

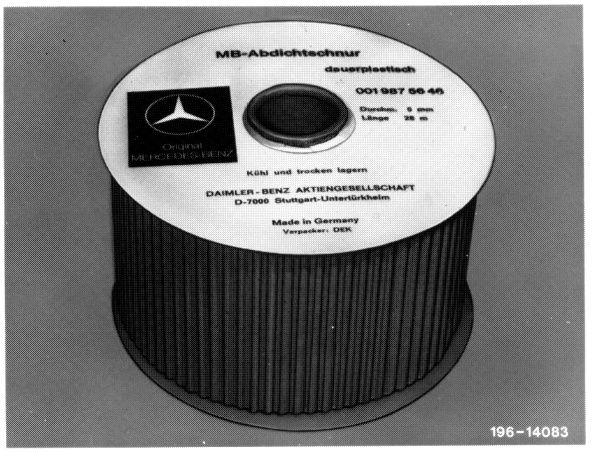

MB glass sealing compound
(can be dabbed off, black)

Cartridge, 310 ml Part no. 001 989 31 20

For sealing window between rubber and glass as well as between rubber and body.

Upon drying, dab off excess material with adhesive tape. Close opened nozzle tip with MB sealing cord.

MB window sealant (grey)

Economy package,
855 ml Part no. 000 989 98 85

For sealing window on T-model between rubber and glass as well as between rubber and body.

No curing time, permanently resilient.

Shelf life	approx. 6 months at 10–25 °C
Cleaner	Naphtha

Attention!
For glueing jobs on our bodies, only the following glues may be used.

MB universal glue

Brush can, 340 g Part no. 000 989 92 71

When ordering, make sure to name size of container!

For glueing sound insulation parts (e.g. damping of engine hood), leather, felt, rubber one upon the other on sheet metal.

Cleaner Nitro solution

MB universal glue

Can, 750 ml Part no. 000 989 82 71

For glueing textiles, carpeting, synthetic leather, foam parts, rubber sealing frames, felt cardboards upon each other and to sheet metal.

Cleaner Nitro solution

MB PVC glue

Brush can, 350 g Part no. 001 989 30 71

When ordering, name size of container!

For glueing PVC foil to cardboard and sheet metal.

Cleaner Nitro solution

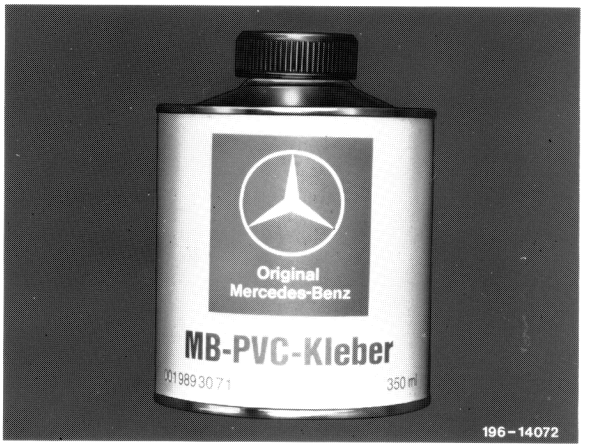

Polyethylene foil glue

Can, 750 ml	Part no. 001 989 79 71

For glueing covers from polyethylene to inner door sheeting

Cleaner	Nitro solution

Note: Below is a description of sealing jobs on rear window. Seal windshield equivalently.

Sealing material		
Sealing from outside MB universal sealing compound	Tube	003 989 01 71
Sealing from inside polyurethane glueing material		004 989 53 71 10

A. Sealing rear window from outside

1 Heat front part of cartridge application nozzle all-around by means of a hot air blower or the like (approx. 125 °C, set to low heating capacity), bend on a fixed base and let cool down in this position.

2 Remove ornamental frame on rear window (67–220).

Note: If in an individual case the ornamental frame cannot be removed without damage, the seal can also be removed from inside vehicle (section B).

3 Press sealing material into gap between pane and body.

4 Install ornamental frame on rear window (67–220).

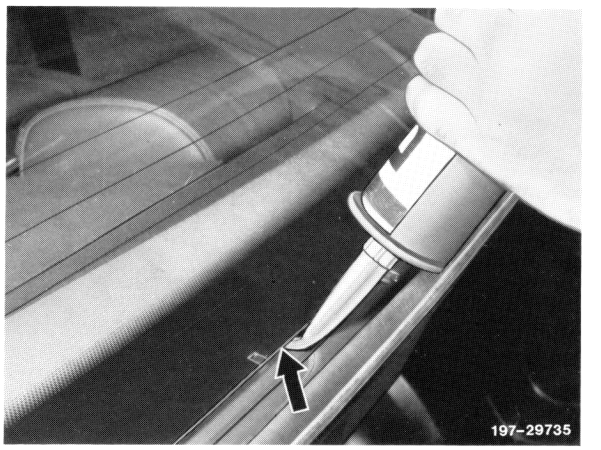

B. Sealing rear window from vehicle interior

1 Remove trim on rear pillar left and right (68–449).

2 Force out fastening clips of headlining left and right on rear pillar.

3 Disengage headlining on rear window.

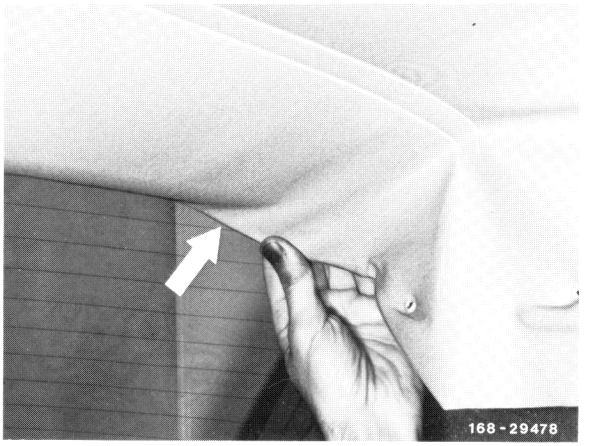

4 Mask area on pane and body about to be sealed.

5 Mask hat rack and rear seat.

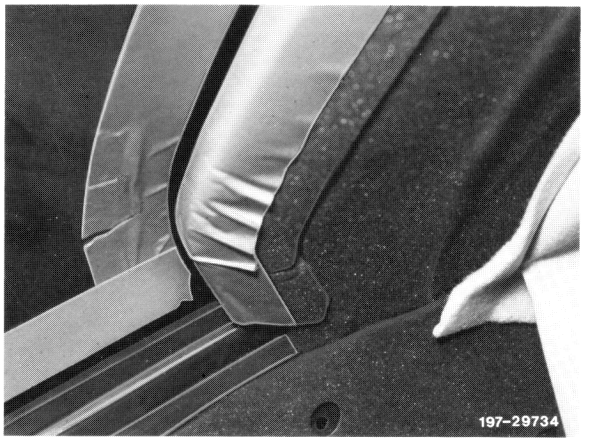

6 Press sealing material into gap between pane and body (nozzle tip dia. approx. 4 mm).

7 Distribute sealing material with brush.

8 Carefully pull off adhesive tape on pane and body.

9 For further installation proceed vice versa.

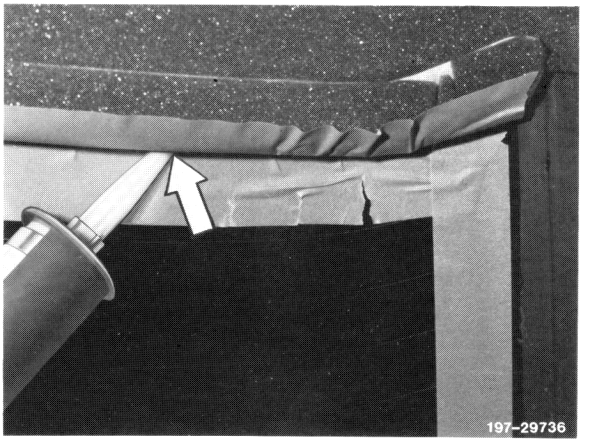

Survey of items

No.	Item	Coordinates
97-86071	Water enters at rear pillar	G 18
97-88041	With tilting/sliding roof opened, draft from openings of belt guide fitting on center pillar	G 18
97-88121	MB body sealing compound does not cure after application	G 18
97-87011	Water enters at sliding roof	H 18
97-87012	Water enters legroom of front passenger	H 18
97-87092	Water enters driver's/front passenger legroom near front wall pillar	J 18

97 Body sealing

97-86071	Water enters at rear pillar.	Model 124 T-sedan	–

Cause
Seams on hinge recess of tailgate not perfectly sealed.

Remedy
Seal seam with MB body sealing compound, part no. 001 989 63 20, touch up, paint in vehicle color and preserve.

97 Body sealing

97-88041 With tilting/sliding roof opened, draft from openings of belt guide fitting on center pillar.

Cause
Vacuum in vehicle will cause air to flow from outside into vehicle.

Remedy
Set air volume switch at least to blower stage "I".
Glue sealing, part no. 124 690 00 98, approx. 80 mm above upper door hinge, inside, on center pillar.

Production breakpoint: March 1988 phased in.

97 Body sealing

97-88121 MB body sealing compound does not cure after application.

Cause
The tools (brush, wooden spatula etc.) used for the application of MB body sealing compound, part no. 001 989 63 20, were cleaned with paint thinner or other alcohol containing liquids.

Remedy
The tools used for application may only be cleaned with benzine.

97 Leaks

97-87011 Water enters at sliding roof.

Cause
Water drain hoses have insufficient passage, they are kinked.

Remedy
The water drain hoses can be checked for proper routing and water drainage by means of an electric sliding roof control cable in unkinked condition. For this purpose, grind off the projecting contours of the metal piece of the control cable and round off the tip. With exposed access, insert the control cable from the top. If the passage is unobstructed, the control cable should pass easily through the pipe until the tip appears at the water outlet.

97 Leaks

97-87012 Water enters legroom of front passenger.

Cause
Water enters legroom of front passenger at fastening bolts of battery frame.

Remedy
Remove battery and battery frame and slip elastic washer, part no. 115 997 10 40, on fastening bolts. Install battery frame and battery. The washer has been installed during production since end of 10/86.

97 Leaks

97-87092 Water enters driver's/front passenger legroom near front wall pillar.

Cause
Leaking at front wall pillar at break-through of water drain hose for tilting/sliding roof.

Remedy
Seal with MB universal sealing compound, applied from outside by means of a hose end (e.g. from windshield washer). The sealing material is inserted between fender and door. The area is lighted by means of a self-made lamp from a 5 watts tubular lamp and 2 lines.

Subject: [MB] 1987 W126 intermittent climate control (w/SOLUTION!) LONG
Date: Wednesday, May 8, 2002 11:30 PM
From: Christopher J Pikus <cpikus@san.rr.com>
Reply-To: mercedes@mercedeslist.com
To: <mercedes@mercedeslist.com>

Good evening all. I have been meaning to write this for the past week or so, but hadn't gotten around to it. After I wrote that last climate control message, I thought I'd sit down and just write it up. It's a bit long, but I think it will be useful to anyone who has a "modern" climate control system (W124, W201 & 1986-up W126).

Basically, my Type III (IIA?) climate control would oscillate from working perfectly to blowing hot air out of the defrost vents. The car would stay cool, but it would be fighting itself and I found it really annoying and obtrusive.

This is kind of long posting, because I'll be going through the diagnosis in a kind of narrative style. You can skip to the bottom if you just want to see the answer and the reason behind it.

The story starts about three weeks ago when I was getting ready to drive from San Diego to Phoenix in order to attend my brother's wedding. Since I was also going to be driving my parents too, the 420SEL was the mandatory choice for travel. Having been recently inspired by Marshall Booth's posting saying that he needed to drive each car in his fleet at least 100 miles/week in order to keep them in fighting trim, I decided to take the 420SEL out of its coccoon in order to shake it down prior to the big trip. Normally, I drive my other Benzes and the W126 only gets driven occasionally: about 20-30 miles per week.

So here I am taking the cats for a drive and everything is great. Then all of a sudden, the vents are no longer putting out cold air. I play with the switches and nothing changes. Even the fan speed switch has no effect. Then I feel around the vents and note that *hot* air is coming out of the defrost vents. And it's 90 degrees out (32C for you metric folk).

A little later, the AC kicks on full blast and the cabin cools down again. Five minutes later, it goes into heat mode. Then cooldown. Again, the buttons have no effect -- even the fan speed. But, the fan speed isn't the full-blast speed that the defroster goes into. The astute reader will realize that that is a CLUE!!, but said CLUE was lost on me at the time.

I had visions of myself trying to drive across the Arizona desert with the ACC in defrost mode. And my parents would be withering in the back seat. This is clearly unacceptable. So I make an appointment at the local independent shop to look at it Tuesday morning. [That's about t-minus 48 hours for departure to PHX.]

Tuesday comes and the car is in the shop. I stress the need for speed as I need to start my drive to PHX on thursday morning. Given the symptoms, they diagnose it to be the climate control unit and replace it. (I had discussed this with them before hand and was prepared for this.) I get the car back and it does indeed work. So I'm happy.

I depart for phoenix on Thursday at noon. I'm on the road twenty minutes and it goes into heat mode again. I'm about the abort the trip and take my cramped coupe because of flakey climate control. This means buying plane tickets for the parents because there's no way to fold them into the back seat of the coupe.

Back to the shop. We discuss it a bit and it occurs to me that wild temperature fluctuations are often caused by little airflow across the temperature sensor in the cieling. I blow on the sensor and the system decides to blow cold again. Now that I have a temporary fix, I decide that I can risk a drive across the desert in the car.

So I'm on my way... and whenever I notice that the car is no longer blowing cold air, I blow some hot air of my own into the temperature sensor and it gets the message. It still bugs me, but I can live with it.

So on friday, in between some pre-wedding festivities, I pull the glove compartment out of the car and try to see why the air is not flowing over the sensor. The aspirator fan is always powered whenever the ignition is on, so it's not electrical. And the hose seems solid: if it had a leak the temperature control would never be stable, not be intermittent. So I rule out that cause and put the glove compartment back together.

Is it air currents that accidentally blow a snootful of cold air into the sensor and cause it to go into heat mode? Blocking direct airflow into it doesn't affect it. That theory shot down.

Fast forward about a week. Through the wedding, the drive back, and shuttling the ancestors around San

Diego that week....

One evening before bed, I read through the MB shop manual for the climate control and memorize the schematic diagrams for the 126.0xx system. And I ponder some more. It's got to be an intermittent sensor... but which one?

So, I'm driving down the expressway (because how else do you get around in California?), and I have the recirculate switch on just to keep the cold air in the car. And I notice: whenever the system goes on the blink the indicator light in the recirc switch goes out. CLUE!!! "Aha," says I. The system is losing its ground, all the sensors take on unusual values and the system goes haywire. Well, if it's an intermittent ground, then I have something to look for -- even though I don't relish digging around behind the dash looking for a loose wire.

But, when the system comes back, the recirculation light comes back on. If we truly were losing ground, then the control unit would be reset and the recirc light should have stayed off. CLUE!

So I go back an read through the MB climate control manual again. And I come across the following passage on page A15:

> All output signals are switched off (except the blower control) in case of a short circuit. Outputs are switched on again within 30 seconds after the short circuit has been eliminated.
>
> Mercedes Benz, ACC Service Manual, Model 126

CLUE! CLUE!!

So the next day, I'm driving around and I ask my dad to look at his watch and time the inteval between when the recirc light goes out and when it comes back on. Whadaya know? It's approximately 30 seconds. CLUE! CLUE!! CLUE!!!!

So, it's back to the schematics to see how many output sources there are and which ones could be causing this problem. There are several:

1. Monovalve
2. Seven vacuum actuator solenoids
3. Aux water pump
4. Blower motor control
5. Compressor control (Klima relay)
6. Recirculation switch LED

So, I pull the control unit and start probing the resistances of the output connections.

1. Monovalve: 12 ohms -- in spec
2. vacuum actuators: 58 ohms -- in spec
3. aux water pump: 5 ohms no spec(??)
4. blower motor control goes to a solid state module with high impedence and draws negligible current. Besides it's not part of the short circuit protection logic.
5. KLIMA relay. Another high impedence solid state input with negligible current draw and also above suspicion.
6. recirc LED draws so little current it too is above suspicion.

So everything looks normal. But there's an overcurrent condition. And everything meets spec -- those that have specs. But... an electric motor that is 5 ohms would draw about 3.0 amps (neglecting back-EMF), but the book says 1.0 amps. But why would that be a problem when the car reaches optimum temperature and not sooner? Nonetheless, since it's common wisdom that these things are troublesome in their old age, I decide to unplug it as a test. I'm sure my Dad thought it was strange that I was going to fix the A/C by unplugging something under the hood. But it's an easy thing to try, so I go ahead....

SO I UNPLUG THE AUXILLIARY WATER PUMP AND IT WORKS PERFECTLY.

I take it for a victory drive and the ACC works as it should. It reaches the optimum temperature and the fans go to their lowest speed setting just like they're supposed to. And it keeps working.

Why?

It has been covered before that the electrically driven Aux water pump starts drawing more current as it ages. And this is what happened. The device is only supposed to draw about 1.0 amperes in normal operation. But as it gets older, it starts blocking up and takes more current to operate. If it truly was stuck, then that 5 ohm load would be drawing almost 3.0 amps.

Now the climate control unit is all electronic and all the output signals are really transistors arranged as open collector drivers. Each of these NPN power transistors have their emitters connected to a common "ground" rail which in turn passes through a current measuring shunt resistor prior to being connected

to the real ground. When the current measurement gets too large, the climate control unit cuts out all the outputs (since it can't know which output is shorted) for 30 seconds and retries.

What was happening was that the aux water pump was drawing 3.0 amps. Keeping the monovave in the "cold" position takes another amp. Each of the vacuum actuator solenoids take about 1/5 amp each. So the water pump plus the monovalve, plus "a few" flap closures ran the current right up near the limit. As the cabin cooled down and neared the correct temperature, the control unit tried to close "one more flap," which added even more current to the mix. That last 200 mA was the straw that broke the camel's back so to speak. The climate control unit shuts down all the outputs. Thirty seconds later, it retries -- since the car has warmed up significantly in the heat, the system goes into max cool mode which requieres less flaps closed (and hence less current), everything seems to work perfectly. Again as the car cools down, it tries to close "one more flap" and cuts out again.

The moral of the story: keep an eye on the aux water pump, especially on a 10+ year old car. Years ago Richard Easley suggested wiring a 1.0 amp fuse inline with the pump. I had the kit in the glove compartment but hand't gotten around to it yet. If you live in the warmer climes, you may want to disconnect the aux water pump entirely: it's only used to circulate extra hot water through the heater core when you're idling at a stoplight.

**** This is expecially important to those with the non-electronic Type II climate controls W123 & pre-86 W126. In those cars, an overcurrent situation could burn the printed circuit trace in the electromechanical climate control unit. If you have a pre-1985 ACC, you'd be better off just umplugging the water pump.

That's my story.

chris pikus
1995 E320 coupe
1987 420SEL
1977 240D

--
****
Christopher J. Pikus San Diego, California
Email: cpikus@san.rr.com Mobile: +1 858 254 4159
****

This message is from the Mercedes-Benz Discussion List
----------This list is sponsored by Performance Products----------
Parts and Accessories for Mercedes (r) Catalogs 1-800-243-1220
http://www.performanceproducts.com/default.asp?referer=1026&source=TXX2T35

Home: http://www.mercedeslist.com/mailman/listinfo/mercedes
FAQs: http://hsb.baylor.edu/html/easley/autofaqs/main.htm
Archives: http://www.mercedeslist.com/mailman/private/mercedes/
Admin: mailto:mercedes-admin@mercedeslist.com

Mercedes-Benz

Service

Model Year 1992 (USA)
Models 124, 129, 201

Introduction into service

Mercedes-Benz of North America, Inc.

This Introduction Manual is intended to familiarize you with the technical changes for Model Year 1992. This manual covers models 124, 129 and 201, and *Sportline* models 300 E, 300 CE and 190 E 2.6.

Coverage of models 400 E and 500 E is contained in the Introduction Manual

Model Year 1992 (LSA)
Models 124.034 036 (400 E 500 E)

Coverage of model 140 is contained in the Introduction Manual

Model Year 1992 (LSA)
Model 140

Until the latest repair instructions are available on microfiche, this Introduction Manual can be used by Mercedes-Benz service personnel to familiarize themselves with important technical details to perform maintenance and repairs on the above Model Year 1992 vehicles.

All other repair instructions, adjustment values and maintenance jobs not listed here can be found in existing technical literature.

Mercedes-Benz Aktiengesellschaft
Vertrieb Personenwagen

February 1992

Table of contents

Vehicle and component identification . . 1

Technical highlights 6

Engines 102, 103, 104, 119 CIS-E

07.3 CIS-E gasoline injection system

Modifications compared to model year 1991 8
Fuel pump package, engine 102.985 8
Battery voltage-dependent idle speed increase, engine 119 in model 129 9
Transmission upshift delay, engines 102, 103, 104, 119 10
Function diagram, transmission upshift delay 10
Transmission upshift delay test . . . 12

14 Emission control system

O_2-sensor replacement indicator (California only) 14

Engine 602.962

07.1 Diesel injection system

General information 16
Fuel injection system components 16
Test and adjustment values 17
Electronic diesel system (EDS) . . . 17
Function diagram, EDS . 19
Component locations 20
Electronic idle speed control (ELR) 22
Exhaust gas recirculation (EGR) . . 23
Boost pressure control (P2-control) 24
System diagnostics 25
Component operation 25
Vacuum line layout 30
Electric wiring diagram 31
Electronic diesel system (EDS) test 32

Drivetrain

27 Automatic transmission

Deletion of secondary pump 49
Upshift delay 51

35 Rear axle

General information 54
Gear set and rear axle shaft 54

46 Steering

Steering wheel (140-design) 55

54 Electrical system - equipment and instruments

Instrument cluster 55

***Sportline* (models 124.030/051, 201.029)**

General information 56

32 Suspension

Modifications 56
Test and adjustment data 57

40 Wheels, wheel alignment

Wheels 59
Wheel alignment 61

46 Steering

Cross reference, model steering gear 62
Steering wheel (140-design) 62

91 Seats

Sport 4-place seating 63

Vehicle identification 1992 (USA)

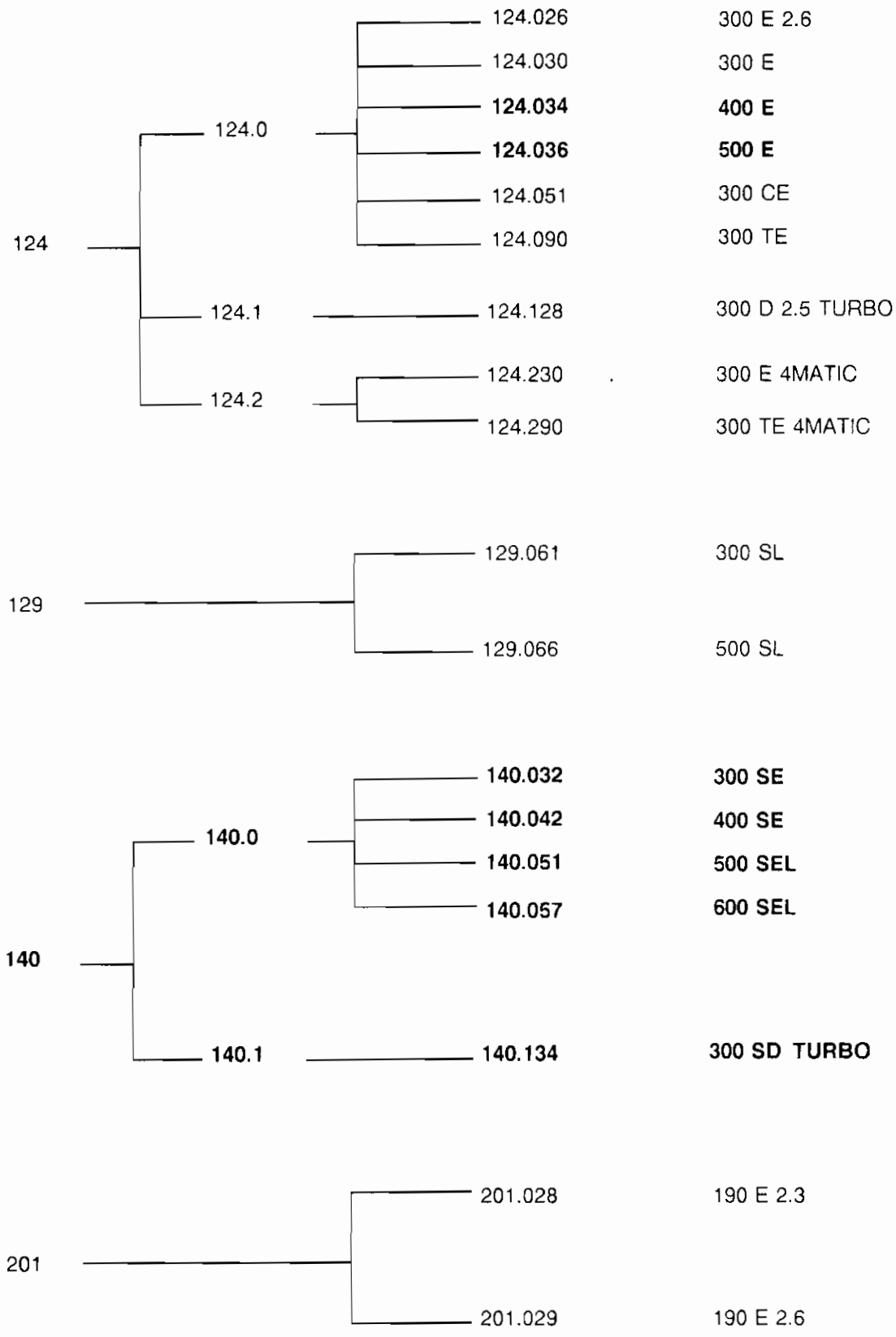

Models indicated in **bold** type are covered in separate Introduction Manuals.

Component identification 1992 (USA)

Sales designation	Model	Engine	Manual transmission	Automatic transmission	Power steering
190 E 2.3	201.028	102.985	717.413	722.408	765.903
190 E 2.6	201.029	103.942	717.432	722.409	765.903
300 D 2.5 TURBO	124.128	602.962	–	722.418	765.904
300 E 2.6	124.026	103.940	–	722.409	765.904
300 E	124.030	103.983	–	722.358	765.904
400 E	124.034	119.975	–	722.354	765.921
500 E	124.036	119.974	–	722.365	765.921
300 CE	124.051	104.980	–	722.359	765.908
300 TE	124.090	103.983	–	722.358	765.904
300 E 4MATIC	124.230	103.985	–	722.342	765.906
300 TE 4MATIC	124.290	103.985	–	722.342	765.906
300 SD TURBO	140.134	603.971	–	722.367	765.940
300 SE	140.032	104.990	–	722.502	765.940
400 SE	140.042	119.971	–	722.366	765.940
500 SEL	140.051	119.970	–	722.370	765.940
600 SEL	140.057	120.980	–	722.362	765.940
300 SL	129.061	104.981	717.451	722.500	765.907
500 SL	129.066	119.960	–	722.353	765.925

Vehicle identification number (VIN)

The following information is encoded into the VIN:
Manufacturer, model, restraint system, model year, manufacturing plant and chassis end number.

Example, model 300 E: WDB E A 30 D X L B 123456

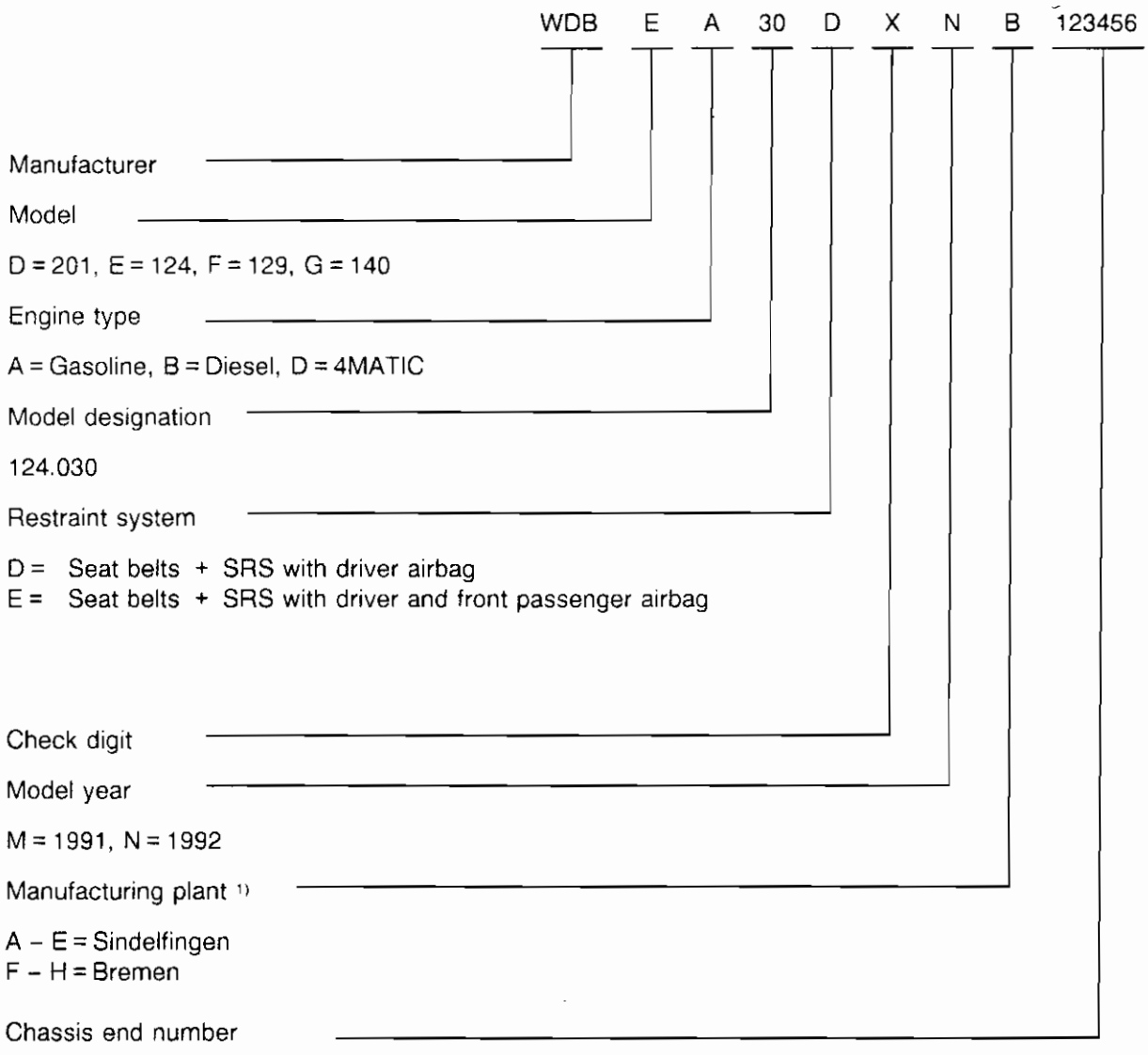

1) Manufacturing plant letter must be specified with the end number because simultaneous production at both plants may mean the same end number digits are assigned to two cars.

Engine family designations

The emission control system information plate attached to the radiator crossmember also shows the engine family designation. The engine family designation identifies model year, piston displacement, version, etc. (see example on next page).

Designations

Engine family	Version [1]	Model	Vehicle sales designation
NMB 2.3 V 6 F A 19	A	201.028	190 E 2.3
NMB 3.0 V 6 F A 1X [2]	A	201.029	190 E 2.6
NMB 3.0 V 6 F A 1X [2]	A	124.026	300 E 2.6
NMB 3.0 V 6 F A 1X	A	124.030	300 E
NMB 3.0 V 6 F A 20	A	124.051	300 CE
NMB 3.0 V 6 F A 1X	A	124.090	300 TE
NMB 2.5 D 9 J F 11	F	124.128	300 D 2.5 TURBO
NMB 3.0 V 6 F A 1X	A	124.230	300 E 4MATIC
NMB 3.0 V 6 F A 1X	A	124.290	300 TE 4MATIC
NMB 3.0 V 6 F A 31	A	129.061	300 SL
NMB 5.0 V 6 F A 14	A	129.066	500 SL

1) A = All 50 states (including California)
F = Federal only (**not** including California)

2) For certification reasons, all 103.94 engines fall into the 3.0 liter engine family, even if the displacement equals only 2.6 liters (190 E 2.6 and 300 E 2.6).

Example: NMB 3.0 V 6 F A 1X

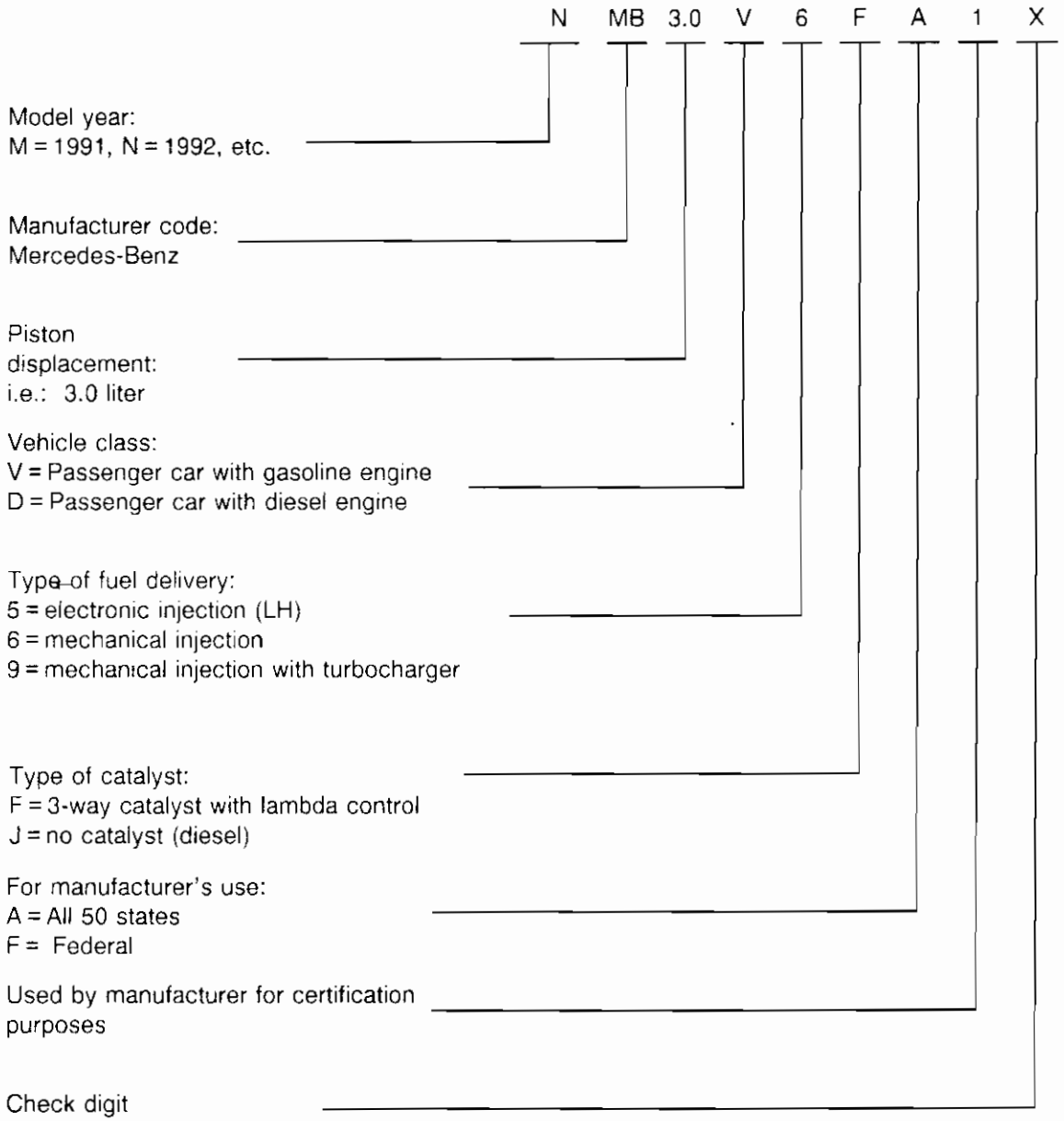

Engines 102, 103, 104, 119

07.3 CIS-E gasoline injection system

- Dual fuel pump package (engine 102.985).
- Battery voltage-dependent idle speed increase.
- Pneumatically operated transmission upshift delay.

14 Emission control system

- O_2-sensor replacement indicator (California only).
  Maintenance note:
  When warning lamp comes on (60,000 miles), replace O_2-sensor.

Engine 602.962

07.1 Diesel injection system

Modifications as compared to model year 1990/91:

- Injection pump (cam shape).
- Vacuum line layout.
- EDS control unit (reference map).
- EDS test program.
- EGR shut-off microswitch.
- Electric wiring diagrams
  (see Electrical Troubleshooting Manual).
- Prechamber with increased volume.
- Electric switchover valves: EGR, boost pressure control, pressure control flap.
- Single vacuum transducer for boost pressure control and pressure control flap.

07.1 Diesel injection system (continued)

The following was deleted:

- Boost pressure control vacuum transducer.
- Engine overload protection.
- Vacuum amplifier and vacuum amplifier switchover valve.

Drivetrain

27 Automatic transmission

- Secondary pump deleted.
- Transmission upshift delay modified.

35 Rear axle

- Rear axle ratio changed in models 124.026, 201.028/029.

46 Steering

- New design steering wheel.

54 Electrical system - equipment and instruments

- CHECK ENGINE warning lamp eliminated in Federal version vehicles.

Sportline (models 124.030/051, 201.029)

32 Suspension

- Suspension components modified, ride height lowered.

40 Wheels, wheel alignment

- Newly designed 8-hole light-alloy wheels for models 124.030/051.

46 Steering

- Newly designed steering wheel, 390 mm in diameter.

91 Seats

- Sport 4-place seating standard equipment in all *Sportline* models.

CIS-E gasoline injection system

Modifications as compared to model year 1991

- Fuel pump package (engine 102.985).
- Battery voltage-dependent idle speed increase (engine 119 in model 129).
- Transmission upshift delay
  - Control of upshift delay via switchover valve (Y3/3).
  - Relay (K29) as well as solenoid valve (Y3/2) for upshift delay deleted from transmission.

Fuel pump package

Engine 102.985

Two fuel pumps are installed, as in model 201.029.

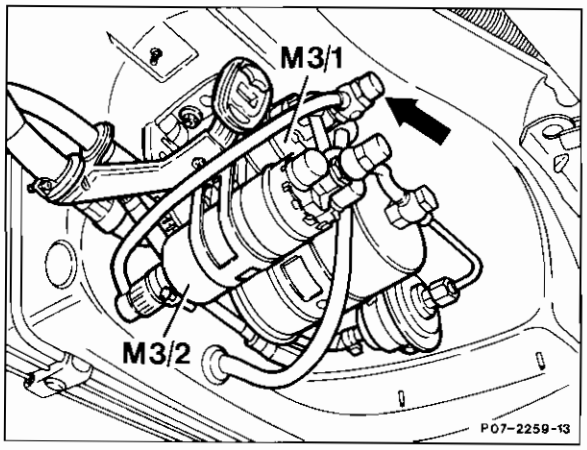

Battery voltage-dependent idle speed increase
Engine 119 in model 129

Effective serial number:
As of chassis end no. F 032599

Depending on battery voltage, the engine idle speed is increased by approx. 100 rpm with the transmission in gear, thereby increasing the charging capacity of the alternator.
The CIS-E control unit received a new part number to differentiate the control unit from the previous version.

Part no.

(USA) Federal	012 545 22 32
(USA) California	012 545 23 32

Operation
The idle speed increase is activated under the following conditions:

- Engine coolant temperature between 60 – 110 °C,
- Selector lever in gear,
- Battery voltage < 12.5 V for at least 20 seconds,
- Engine speed exceeded 900 rpm once.

The idle speed increase is switched off if:

- Selector lever positions "N" or "P" are engaged,
- Engine coolant temperature exceeds 110 °C,
- Ignition is switched OFF.

Once the conditions for activation are met, they remain stored in the CIS-E control unit until the ignition is switched off, even if the battery voltage has since risen above 12.5 V.

Transmission upshift delay

Engines 102, 103, 104, 119

The transmission upshift delay is controlled by the upshift delay switchover valve (Y3/3). The conditions for upshift delay remain unchanged (Operation, see group 27).

Function diagram, transmission upshift delay

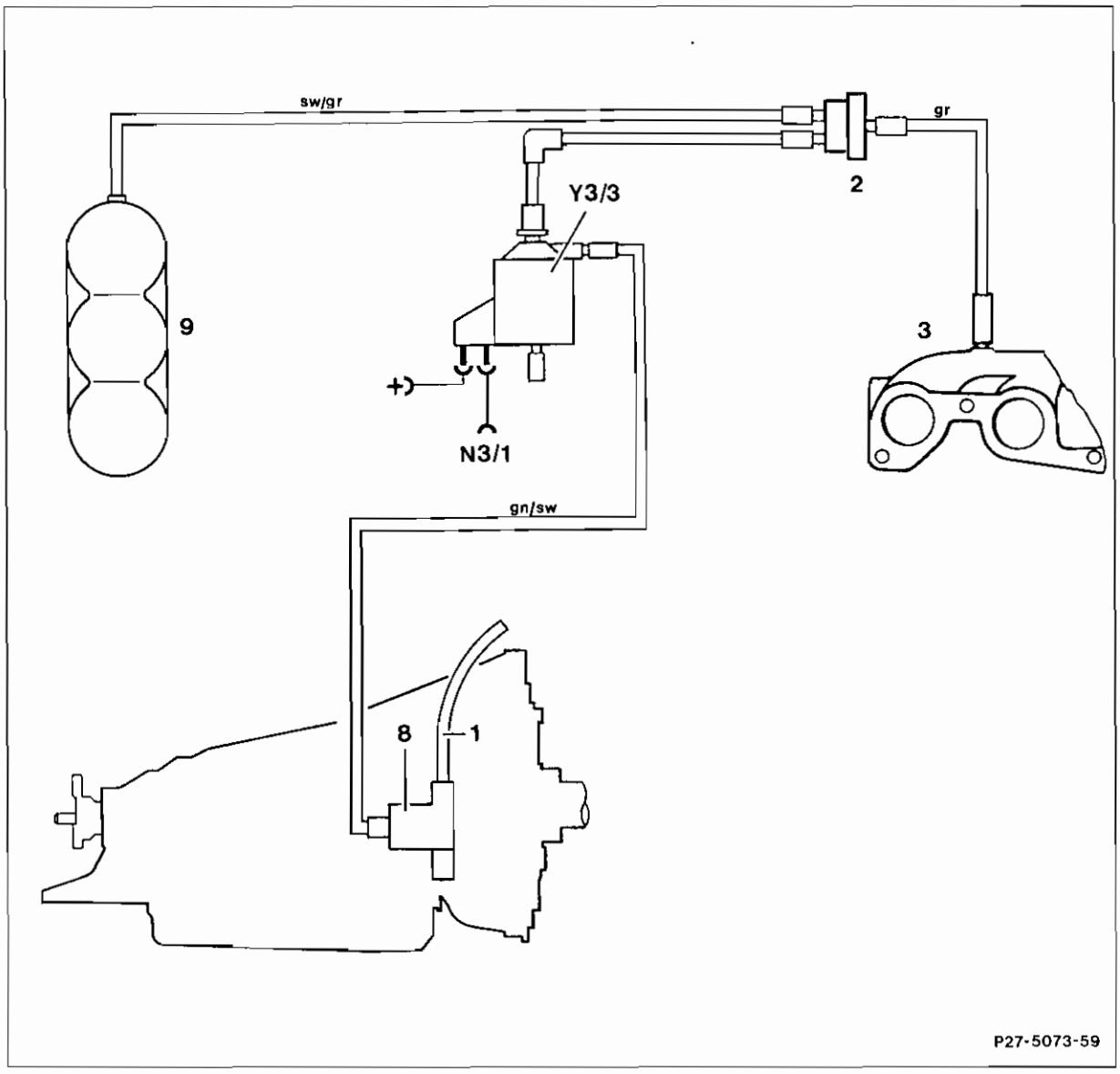

1 Control pressure cable
2 Check valve
3 Intake manifold
8 Upshift delay vacuum element
9 Vacuum reservoir

N3/1 LH control unit (N3 - CIS-E control unit)
Y3/3 Upshift delay switchover valve

sw black
gr grey
gn green

Component locations

Model 124

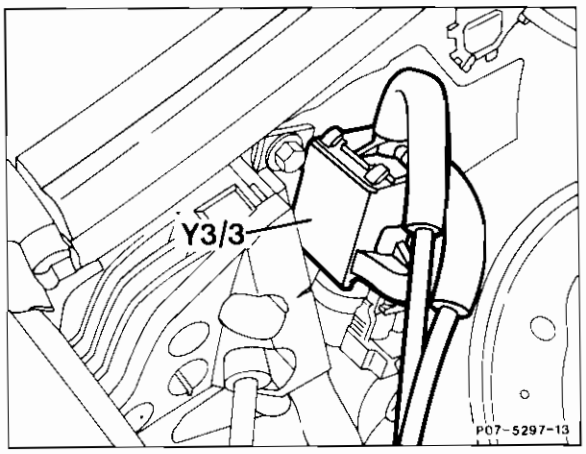

Y3/3 Upshift delay switchover valve

Model 129

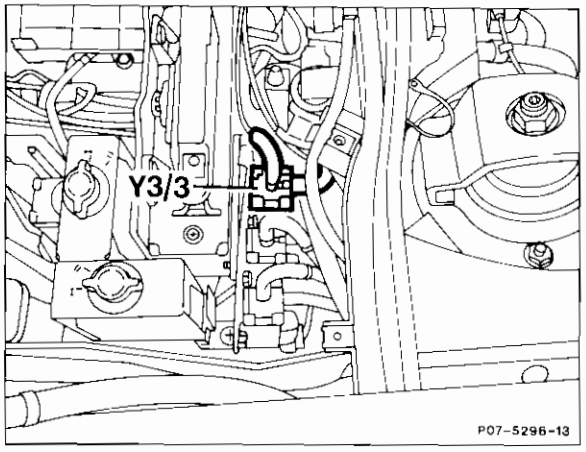

Y3/3 Upshift delay switchover valve

Model 201

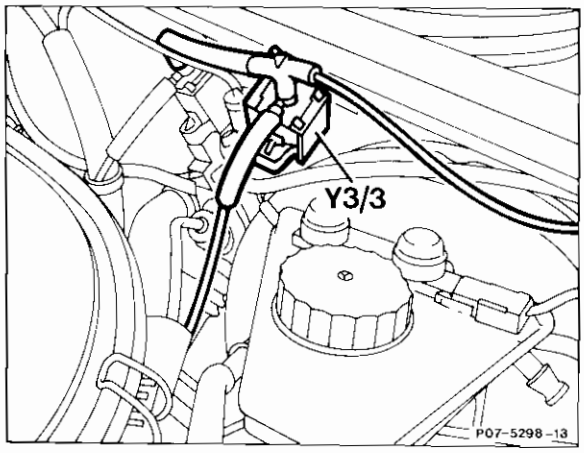

Y3/3 Upshift delay switchover valve

Transmission upshift delay test

Special tools

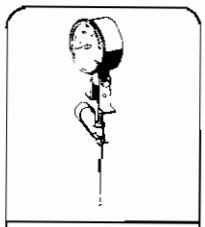
116 589 27 21 00

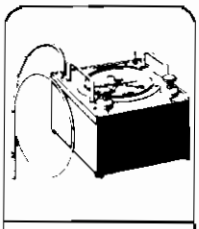
201 589 13 21 00

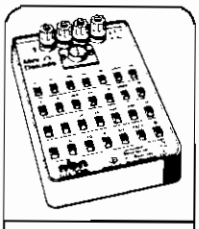
124 589 09 63 00

201 589 00 99 00

Equipment

Multimeter [1]	Fluke model 23 with 80i - 410 inductive pickup

[1] Available through the MBNA Standard Equipment Program

Test conditions

- Engine oil temperature approx. 80 °C.
- All electrical consumers switched off.
- Battery voltage 11 – 14 V.

Test step	Test scope	Test connection	Test condition	Nominal value	Possible cause/remedy
⇒ 1.0	Operation of upshift delay switchover valve (Y3/3)	Disconnect vacuum line (arrow, Figures 1 – 3) on Y3/3. Connect vacuum tester with Y-fitting to Y3/3.	Coolant temperature sensor (B11/2) connector unplugged. Using resistance substitution units, simulate a 2.5 kΩ (+20 °C) resistance at sockets 1 + 3, 2 + 4. Engine: **Start** [1]	>400 mbar up to max. switching time (see Grp. 27 for description of operation).	Y3/3 activation, Open/short circuit, Y3/3 defective. Vacuum element for transmission upshift delay. Vacuum line.

[1] Vehicle must have rear wheels driven to measure nominal value (speed signal dependent).

Test step	Test scope	Test connection	Test condition	Nominal value	Possible cause/remedy
⇒ 2.0	Activation of upshift delay switchover valve (Y3/3)	W11 ⊥ — Y3/3 — 2	Ignition: **On** Connector on Y3/3 unplugged.	11 – 14 V	Overvoltage protection relay, Open/short circuit.
		Y3/3 1 — +	Coolant temperature sensor (B11/2) connector unplugged. Using resistance substitution units, simulate a 2.5 kΩ (+ 20 °C) resistance at sockets 1 + 3, 2 + 4. Engine: **Start**	11 – 14 V up to max. switching time (see Grp. 27 for description of operation).	Open/short circuit, CIS-E control unit defective.
⇒ 3.0	Coil resistance of upshift delay switchover valve (Y3/3)	Y3/3 1 — Y3/3 — 2	Connector on Y3/3 unplugged. Ignition: **OFF**	25 – 40 Ω	Y3/3 defective.

Emission control system

O_2-sensor replacement indicator (California only)

The warning lamp (A1e33) for the O_2-sensor replacement indicator is installed in the instrument cluster.
Upon reaching 60,000 ± 250 miles (i.e. every 60,000 miles), illumination of the warning lamp indicates that the O_2-sensor must be replaced.
For instructions on how to turn off the warning lamp after O_2-sensor replacement, see "Maintenance note".

Activation of the warning lamp occurs via the O_2-sensor replacement indicator control unit (N44/1). The control unit is located in the passenger-side footwell.

The Hall-effect sensor output on the speedometer provides information on miles driven. The number of impulses per mile is determined by multiplying a fixed number by the number of impulses from the Hall-effect sensor. The resulting distance is stored in the control unit.

The warning lamp comes on with the ignition/starter switch in position "2" and goes out again with the engine running (circuit 61 recognition).

A test mode is initiated if the button (arrow) is pressed for longer than 5 seconds with the ignition/starter switch in position "2". The test mode start is indicated by the O_2-sensor warning lamp switching off.

- After a pause of 5 seconds, the recorded mileage is indicated by a blink impulse. The warning lamp blinks once for every 10,000 miles recorded.
- After a 2 second pause, the lamp blinks once for every additional 1,000 miles recorded.
- After a further 2 second pause, the lamp blinks once for every additional 100 miles recorded.

- If the mileage recorded is "0", this is indicated by the lamp not blinking.

- After a further 5 second pause, the operation of the Hall-effect sensor is tested. After the required 5 second pause, the O_2-sensor warning lamp will blink continuously if the vehicle is driven on the road or dynamometer.

The test mode may only be interrupted by switching the ignition off.

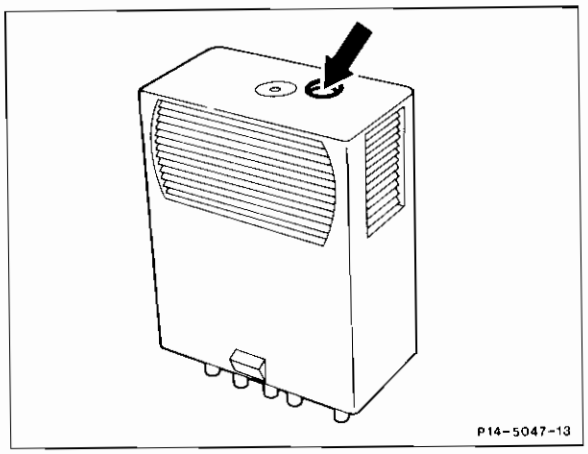

Maintenance note:

The O_2-sensor must be replaced when the warning lamp illuminates at 60,000 ± 250 miles. After replacing the sensor, the warning lamp may be switched off via the button (arrow) on the control unit (N44/1). The button must be pressed for longer than 2 seconds to turn off the lamp. In ignition/starter position "2", the lamp remains lit even after resetting the control unit. The lamp will only go out after the engine is started (circuit 61 recognition) The previously recorded mileage remains stored. The warning lamp will illuminate again at 120,000 miles.

Diesel injection system

General information

Modifications as compared to model year 1990/1991:

- Injection pump (cam shape),
- Vacuum line layout,
- EDS control unit (reference map),
- EDS test program,
- EGR shut-off microswitch,
- Electric wiring diagrams (see Electrical Troubleshooting Manual),
- Prechamber with increased volume,
- Electric switchover valves: EGR, boost pressure control, pressure control flap,
- Single vacuum transducer for boost pressure control and pressure control flap.

The following was deleted:

- Boost pressure control vacuum transducer,
- Engine overload protection,
- Vacuum amplifier and vacuum amplifier switchover valve.

Fuel injection system components

Engine	602.962
Injection pump model designation	PES 5 M 55 C 320 RS 177
Bosch number (for test sheet)	0 400 075 944
Fuel pump (Bosch designation)	FP/KG 24 M 150
Injection nozzle (Bosch designation)	DN 0 SD 265
Injection nozzle part no.	001 017 49 12
Nozzle holder (Bosch designation)	KCA 27 S 55
Injection nozzle and holder complete (Part no.)	002 017 40 21

Test and adjustment values

Engines		602.962
Idle speed at 60–80 °C coolant temperature	rpm	680 ± 20
Injection pump timing (reference impulse) adjustment value		14 + 0.5° after TDC [1]
Injection pump timing (reference impulse) nominal value		15 ± 1° after TDC
Boost pressure at 4,000 rpm, under load	bar	0.75 – 0.85
Injection nozzle opening pressure with new injection nozzles	bar	135 – 145
Injection nozzle opening pressure with used injection nozzles	bar	120

[1] One-time adjustment at 15,000 miles, adjust to 14 + 0.5° after TDC

Electronic diesel system (EDS)

The EDS control unit processes the following functions:

- Electronic idle speed control (ELR),
- Exhaust gas recirculation (EGR),
- Boost pressure control (P2-control),
- System diagnostics.

The EDS control unit processes the incoming signals and delivers a milliamp current to the vacuum transducer(s) and to the electro-magnetic actuator on the injection pump. The entire system can be tested with an impulse counter i.e. the malfunction memory can be read by means of an output signal to the test connection (X11/4).

Block diagram, EDS

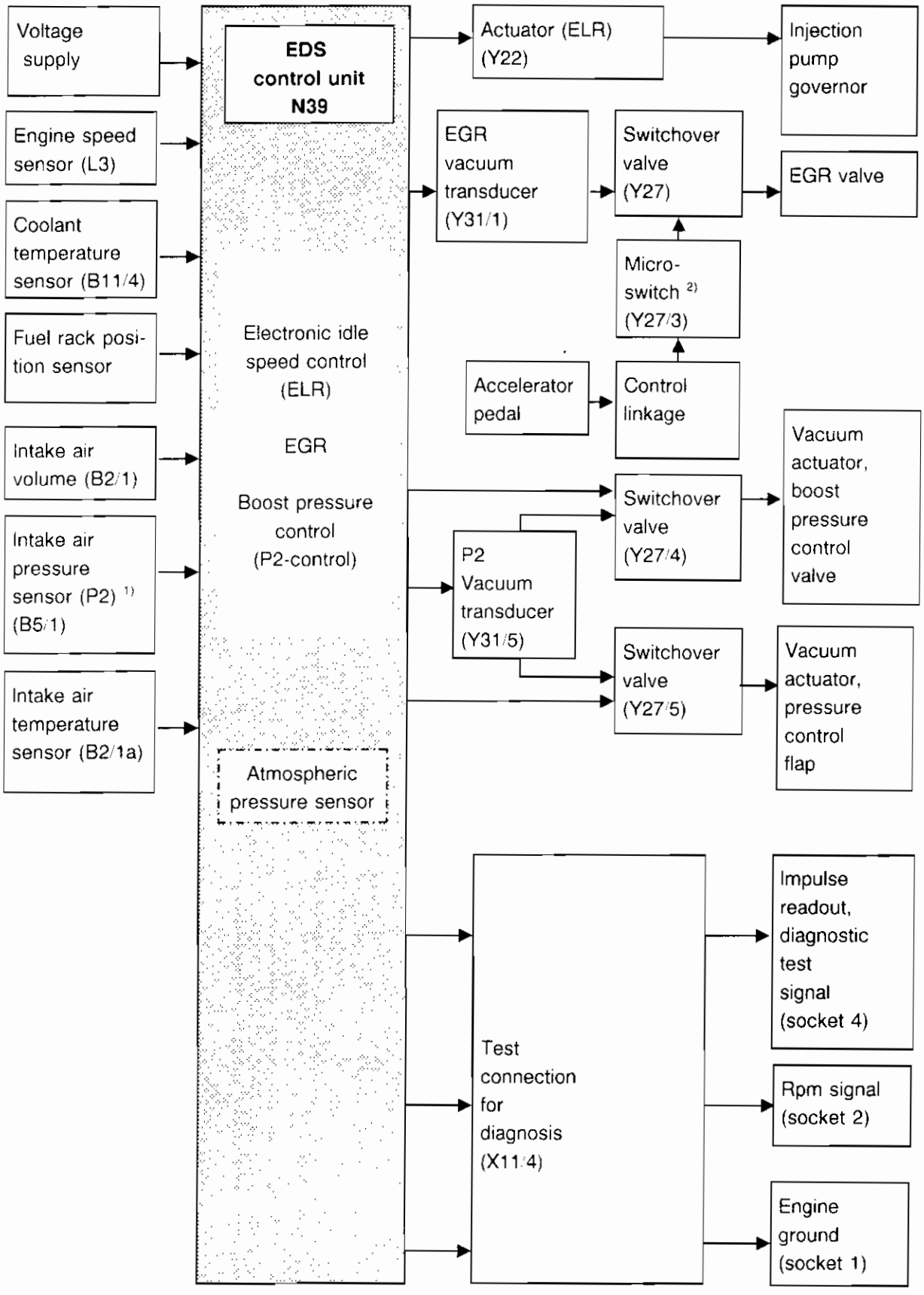

1) Pressure before the intake valves
2) The switchover valve is activated by the control linkage microswitch 10° before full load.

Function diagram, EDS

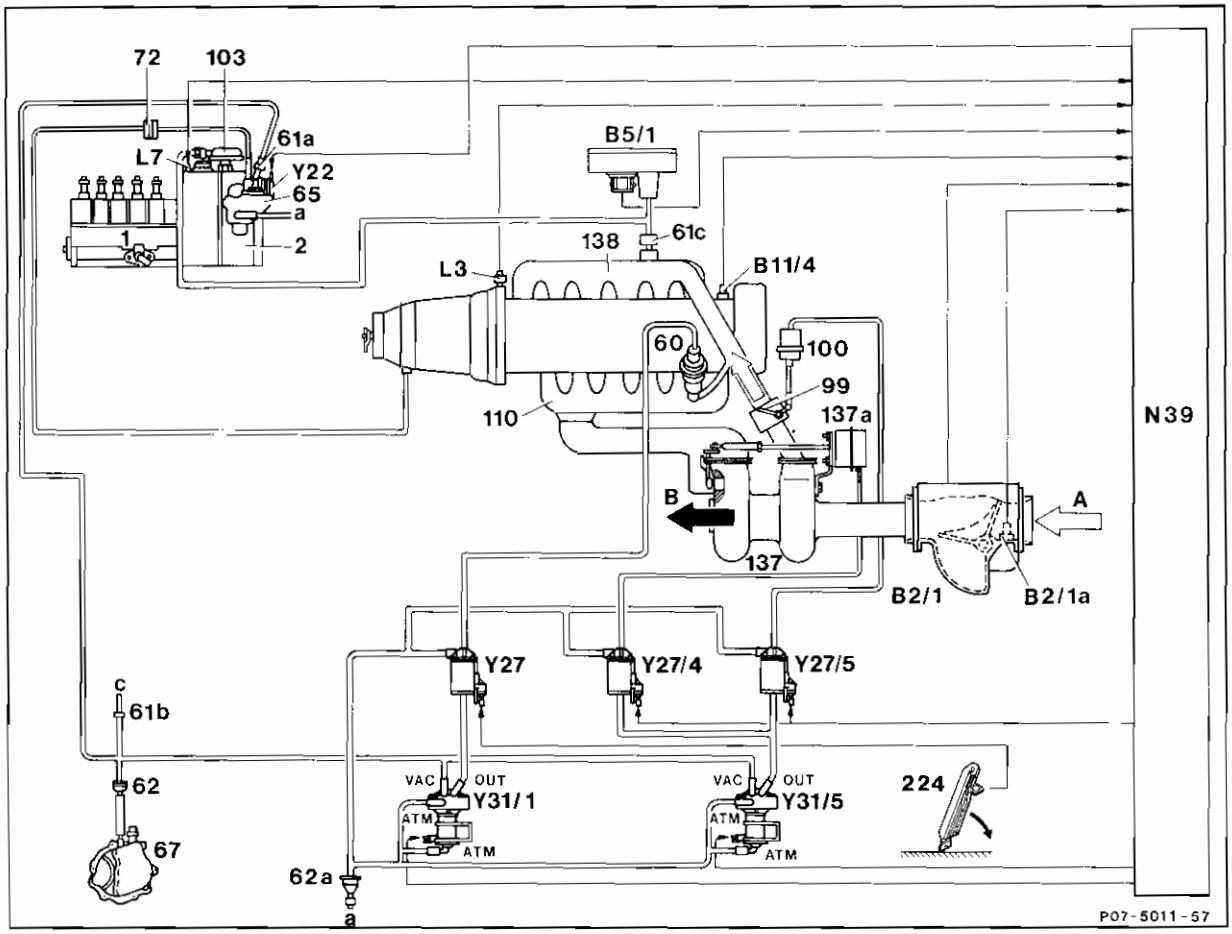

1	Injection pump
2	Governor
60	EGR valve
61a	Orifice
61b	Orifice 0.5
61c	Orifice 0.7
62	Filter
62a	Filter
65	Vacuum control valve
67	Vacuum pump
72	Vacuum damper
99	Pressure control flap and housing
100	Pressure control flap vacuum actuator
103	Aneroid compensator (ALDA)
110	Exhaust manifold
137	Turbocharger
137a	Boost pressure control valve vacuum actuator
138	Intake manifold
224	Accelerator pedal
B2/1	Air flow sensor
B2/1a	Intake air temperature sensor
B5/1	Pressure sensor (EDS)
B11/4	Coolant temperature sensor (EDS)
L3	Starter ring gear speed sensor
L7	Fuel rack position sensor
N39	EDS control unit
Y22	Electromagnetic actuator, electronic idle speed control (ELR)
Y27	EGR switchover valve
Y27/4	Boost pressure control switchover valve
Y27/5	Pressure control flap switchover valve
Y31/1	EGR vacuum transducer
Y31/5	Boost pressure control/pressure control flap vacuum transducer
A	Intake air
B	Exhaust gas
a	Vent line to passenger compartment
c	Remaining vacuum consumers

Pressure and vacuum connections at vacuum transducers

VAC	Vacuum from vacuum pump
ATM	Vent line to passenger compartment
OUT	From vacuum transducer (Y31/1) to EGR switchover valve (Y27)
OUT	From vacuum transducer (Y31/5) to switchover valves (Y27/4) and (Y27/5)

Component locations

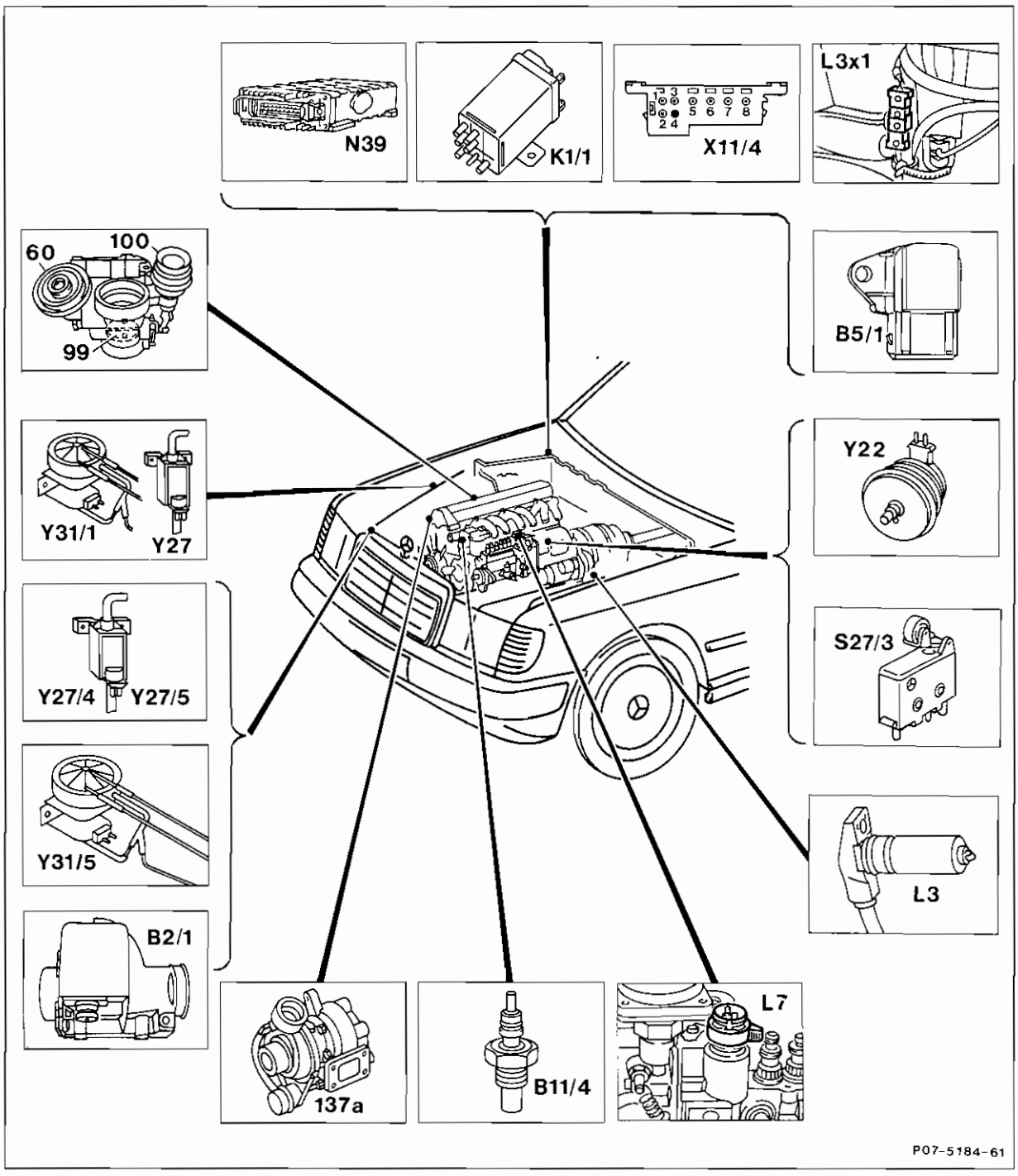

B2/1	Air flow sensor and air intake temperature sensor
B5/1	Pressure sensor (EDS)
B11/4	Coolant temperature sensor (EDS)
K1/1	Overvoltage protection relay, 87E
L3	Starter ring gear speed sensor
L3x1	Connector, starter ring gear speed sensor
L7	Fuel rack position sensor
N39	EDS control unit
S27/3	EGR microswitch
X11/4	Test connection for diagnosis (impulse readout, 8-pole)
Y22	Electromagnetic actuator, electronic idle speed control (ELR)
Y27	EGR switchover valve
Y27/4	Boost pressure control switchover valve
Y27/5	Pressure control flap switchover valve
Y31/1	EGR vacuum transducer
Y31/5	Boost pressure control/pressure control flap vacuum transducer
60	EGR valve
99	Pressure control flap and housing
100	Pressure control flap vacuum actuator
137a	Boost pressure control valve vacuum actuator

Electronic idle speed control (ELR)

The starter ring gear speed sensor (L3) picks up the engine speed (144 impulses per revolution) and sends it in the form of an AC voltage signal to the EDS control unit. The EDS control unit processes the rpm signal and performs an nominal/actual value comparison.

As a result, the idle speed is held constant by the electromagnetic actuator regardless of engine load. At coolant temperatures below 60 °C, the idle speed nominal value is increased according to a preset reference map.

Block diagram, idle speed control

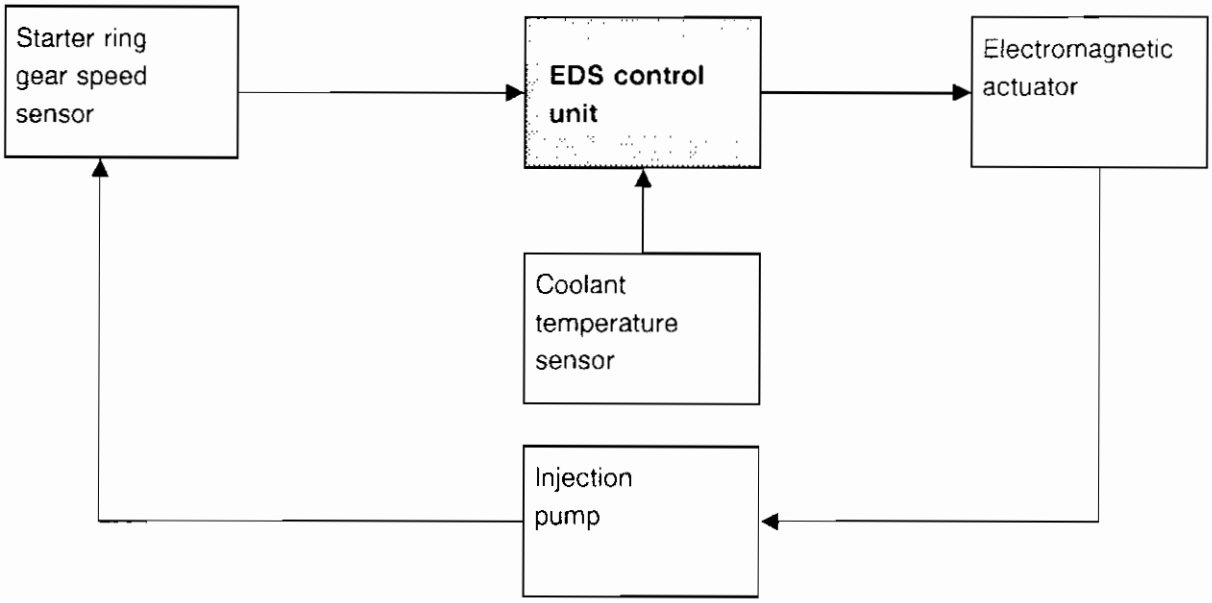

Exhaust gas recirculation (EGR)

Exhaust gas recirculation occurs as soon as the following conditions are met:

- Coolant temperature between 60 °C and 110 °C
- Battery voltage 11–14 Volt
- Fuel rack travel < 9 mm
- Engine speed up to approx. 3500 rpm

According to the input signals from sensors e.g. fuel rack travel, engine speed, etc., the EDS control unit calculates the corresponding volume of exhaust gas recirculation for the respective operating conditions.

Control current is applied to the vacuum transducer which delivers a respective amount of vacuum to the EGR valve.

The EGR volume is reduced as engine speed and load increase.
This means:
Increasing control current = increasing EGR volume
Decreasing control current = decreasing EGR volume.
In addition: EGR shut-off at 10° before full load via control linkage microswitch and switchover valve in vacuum line. As a result, smoke emission is reduced during load changes towards full load.

Block diagram, EGR

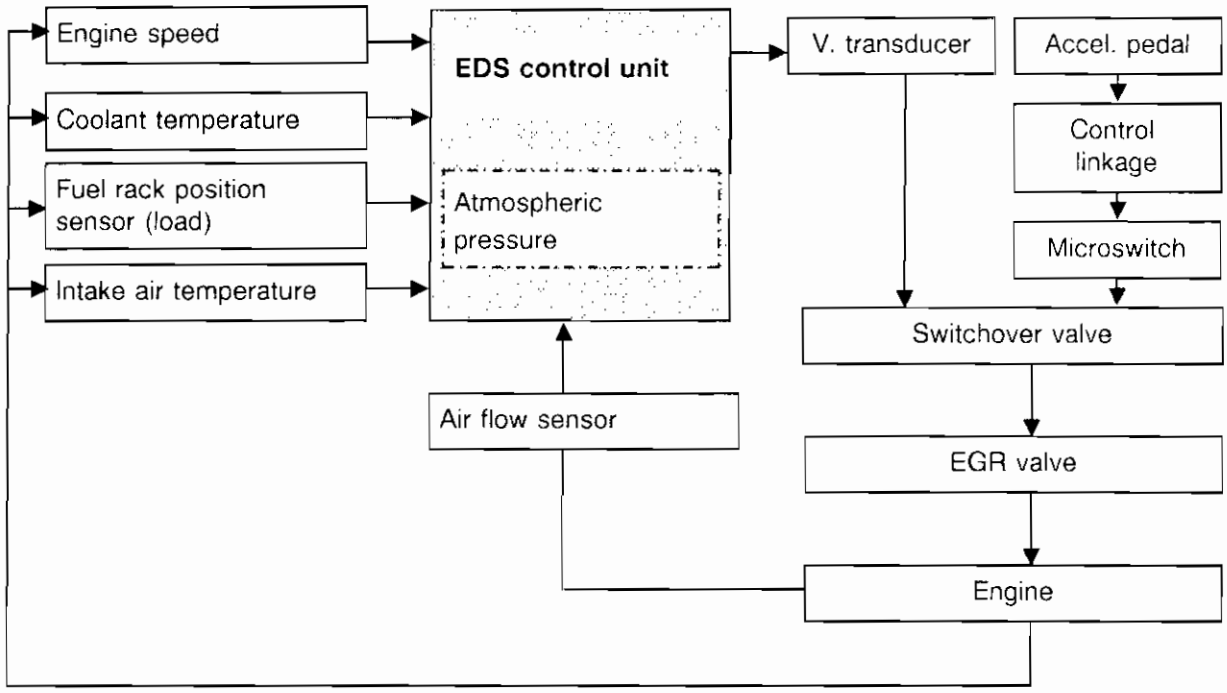

The EGR system with vacuum transducer, EGR switchover valve, EGR valve, air flow sensor and EDS control unit operates as a closed loop.

Boost pressure control (P2-control)

A **"reference map"** (for P2-control) is stored in the EDS control unit. The pressure values received by the control unit relative to injection volume and engine speed generate optimal engine performance with respect to consumption, NOx, HC and particulate emission.

By reducing the pressure (P2) ahead of the intake valves during partial load operation, it is possible to achieve a reduction in particulate emission.

The EDS control unit contains a closed loop circuit which compares pressures "P2 actual" with "P2 nominal" (see block diagram).

Any difference between the two pressure values is equalized either by the boost pressure control valve or by the pressure control flap.
The boost pressure control valve is activated by electronically adjustable vacuum from the vacuum transducer and electric switchover valve.

Boost pressure control is dependent on:

- Intake air pressure,
- Engine speed,
- Fuel rack position (travel).

Block diagram, boost pressure control (P2-control)

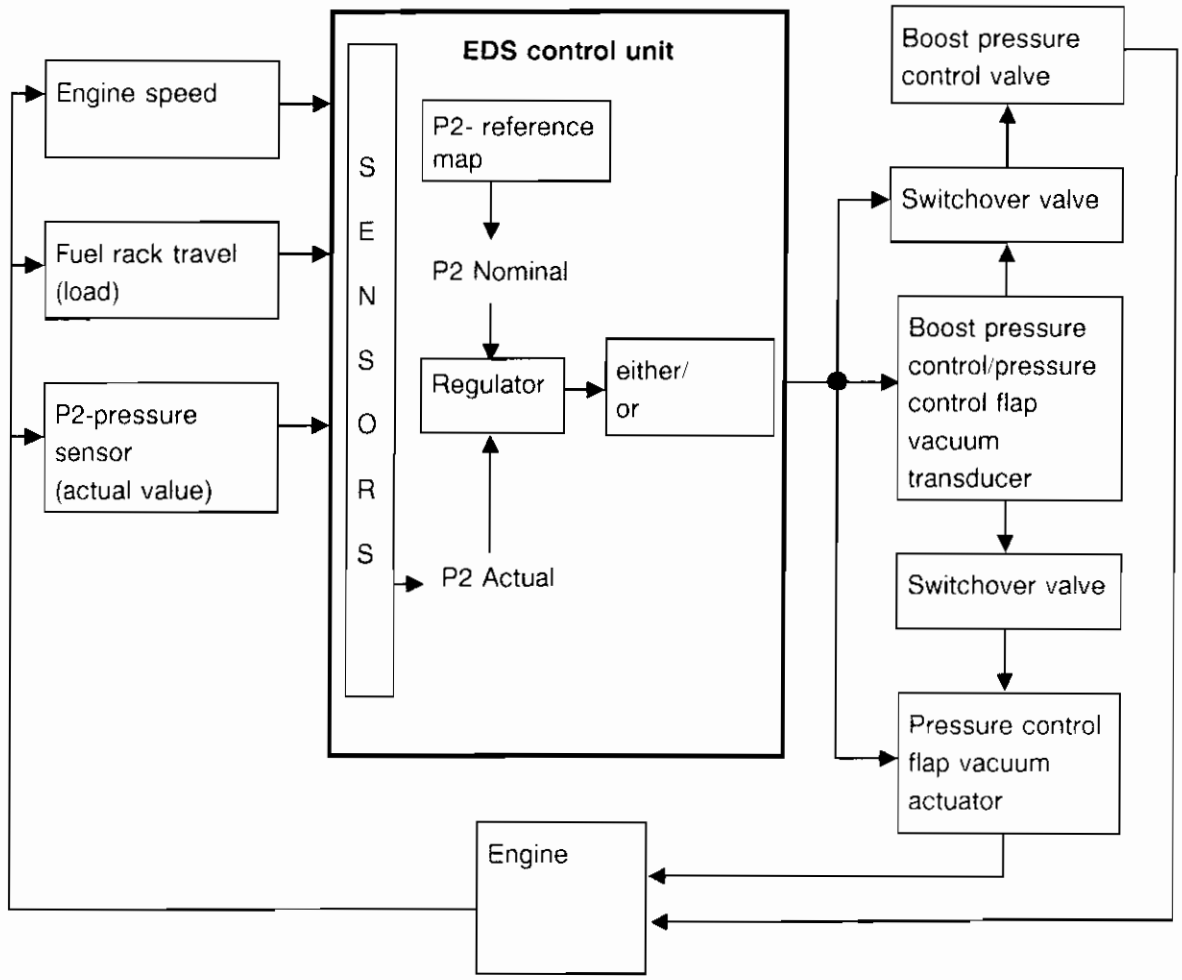

System diagnostics

The self-check program integrated into the EDS control unit tests the electronic diesel system i.e. detects and stores system malfunctions. Intermittent malfunctions, which occur for longer than 4 seconds, are also stored.
For example, sensor malfunctions, with the exception of engine speed sensor, are stored into memory, as well as short circuits in the actuators and their input wiring.

Through the use of an impulse counter at socket 4 of test connection (X11/4), the individual malfunctions can be recalled for evaluation. The proper diagnosis can be determined according to the indicated malfunction.

Component operation

EDS control unit (N39)
The control unit processes the incoming signals and delivers a milliamp current to the two vacuum transducers, to the electromagnetic actuator on the injection pump, and the boost pressure control and pressure control flap switchover valves. The entire system can be tested with an impulse counter i.e. the malfunction memory can be read by means of the test connection (X11/4, socket 4).

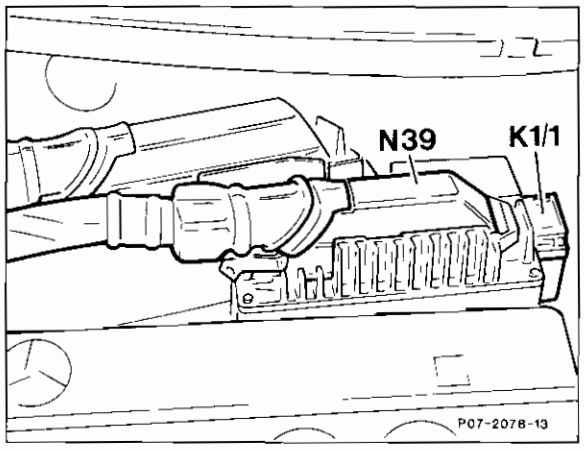

Atmospheric pressure sensor (integrated into control unit)
Depending on altitude or atmospheric pressure, the atmospheric pressure sensor influences EGR volume and boost pressure. The atmospheric pressure sensor sends the control unit a decreasing voltage signal at decreasing air pressures (increasing altitudes). The EGR and P2 reference map values are adapted according to a pressure dependent characteristic.

Test connection for diagnosis (X11/4)
The impulse readout for diagnosis can be picked up at this test connection.

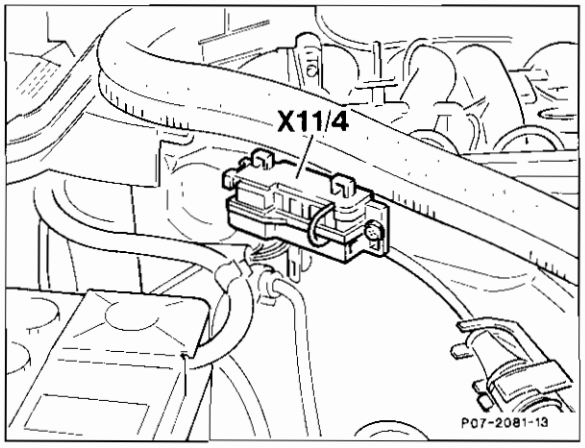

Air flow sensor (B2/1)
Intake air temperature sensor (B2/1a)
Located in the air flow between the air filter and the turbocharger.

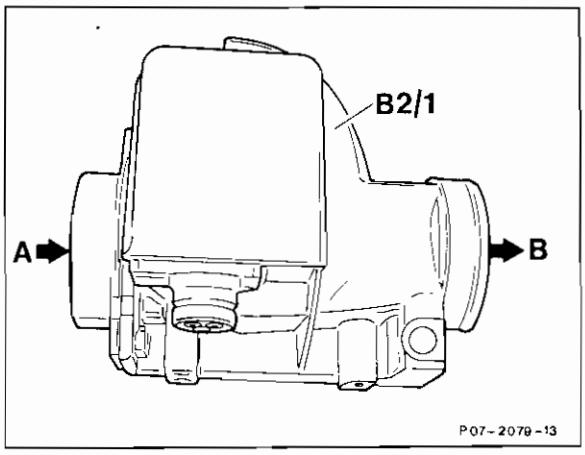

A from air filter
B to turbocharger

Acting against a return spring, intake air opens the air flow sensor plate to a specific angle. The position of the plate is measured by a potentiometer which converts the position into a voltage signal.
The intake air temperature is read by the temperature sensor (B2/1a) in the air flow sensor.

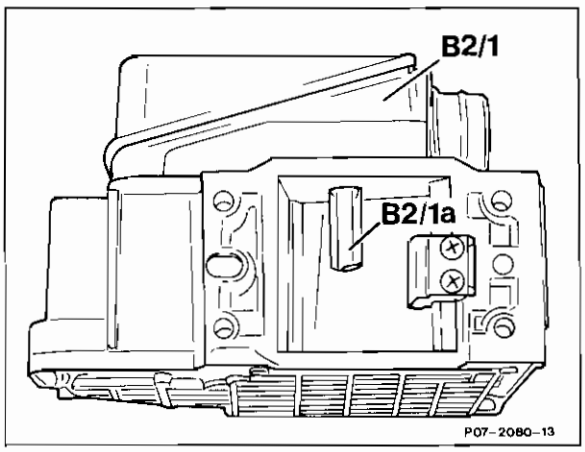

Vacuum transducers (Y31/1, Y31/5)
Respective to operating conditions, the vacuum transducers receive a control current from the control unit. The vacuum transducers then deliver a corresponding amount of vacuum for the electric switchover valves.

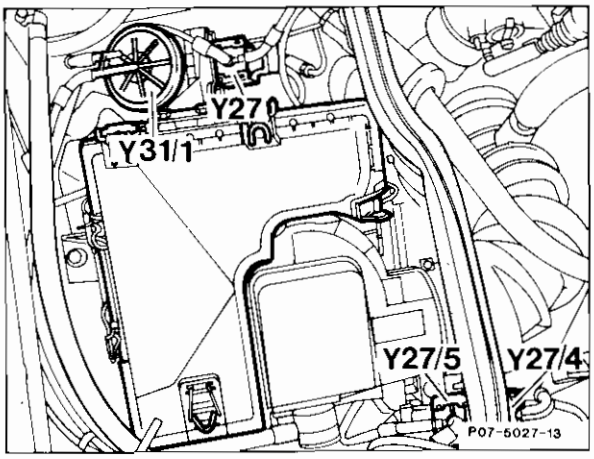

Y31/1 EGR valve vacuum transducer
Y31/5 Boost pressure control/pressure control valve vacuum transducer (not visible, located under air filter)

EGR switchover valve (Y27), EGR microswitch (S27/3)

The EGR switchover valve (Y27) is activated by the control linkage microswitch (S27/3) 10° before full load, thereby closing the EGR valve.

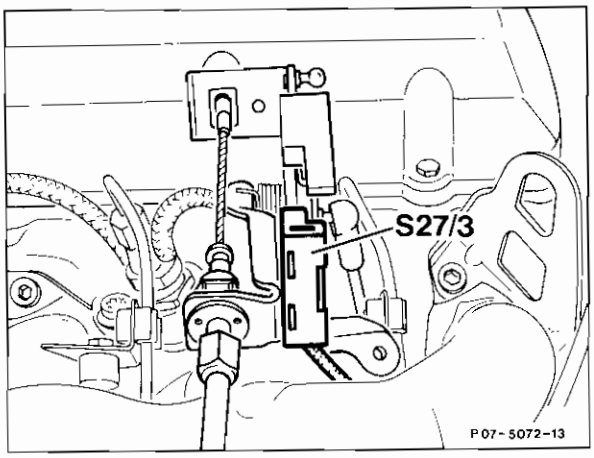

S27/3 EGR microswitch

Electric switchover valves (Y27/4, Y27/5)

Depending on operating conditions, the electric switchover valves receive a control current from the control unit and vacuum from the vacuum transducer (Y31/5). They convey the control unit command as a pneumatic signal to the boost pressure control valve and pressure control flap.

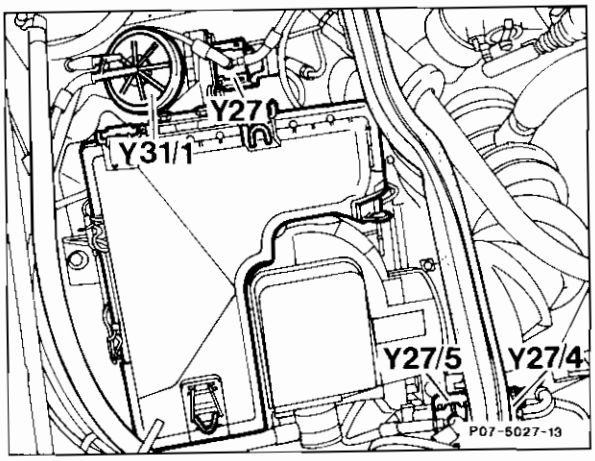

Y27	EGR switchover valve
Y27/4	Boost pressure control switchover valve
Y27/5	Pressure control flap switchover valve

Starter ring gear speed sensor (L3)

Determines engine speed via the starter ring gear (144 impulses per revolution) and sends it in the form of a AC voltage signal to the control unit.

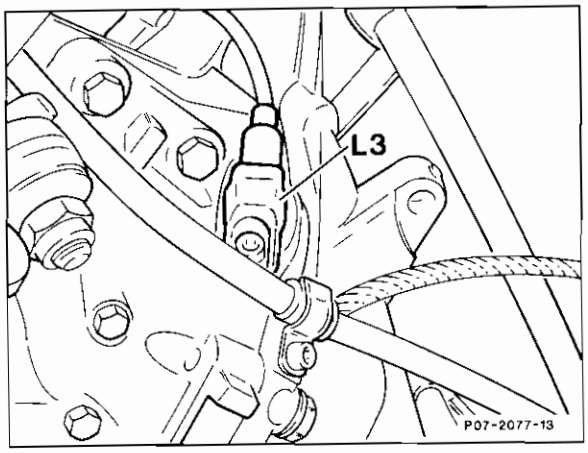

Pressure sensor (B5/1)

Located on the right, behind the firewall, the pressure sensor reads the pressure (P2) and converts it into a voltage signal which is used by the EDS control unit as an input signal.

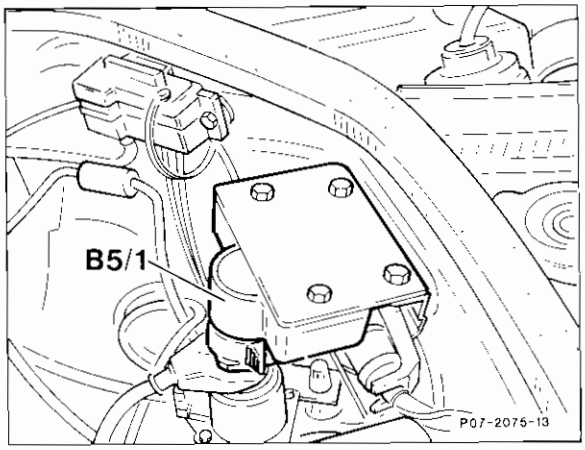

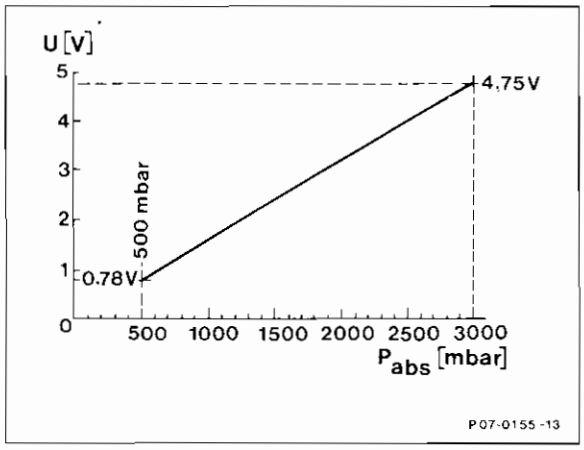

Pabs Absolute pressure in mbar, reference at 5 V supply voltage

EGR valve (60)

The EGR valve, together with the mixture tube, is bolted laterally to the cylinder head. It is connected to the exhaust manifold, the intake manifold crossover pipe and to a corrugated tube. Controlled vacuum from the switchover valve (Y27) and vacuum transducer (Y31/1) is applied to the EGR valve to open the valve.

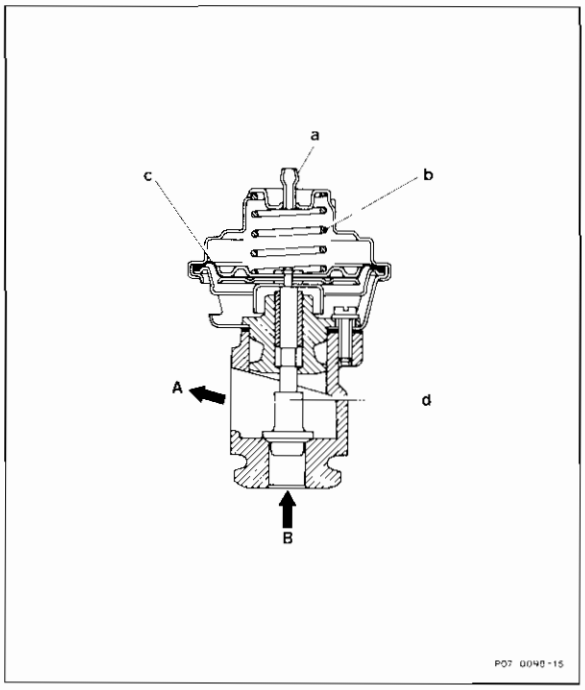

A Exhaust to the intake manifold
B Exhaust from the exhaust manifold
a Vacuum connection
b Spring
c Diaphragm
d Valve

Coolant temperature sensor (B11/4)
Coolant temperature is determined by the coolant temperature sensor (B11/4) which is controlled by t he EDS control unit.
The temperature sensor resistance changes according to coolant temperature.

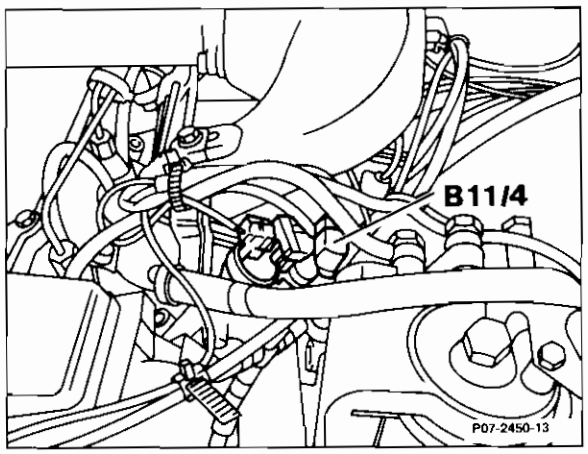

Housing (94a) with pressure control flap (99) and vacuum actuator (100)
A pneumatically operated pressure control flap, located in a housing on the intake manifold. adjusts boost pressure in the intake manifold. The pressure control flap closes the fresh air intake during EGR operation. A minimal opening (arrows) between the pressure control flap and the housing remains. The vacuum actuator (100) is activated by the pressure control flap switchover valve (Y27/5) and vacuum transducer (Y31/5) (see functional diagram).

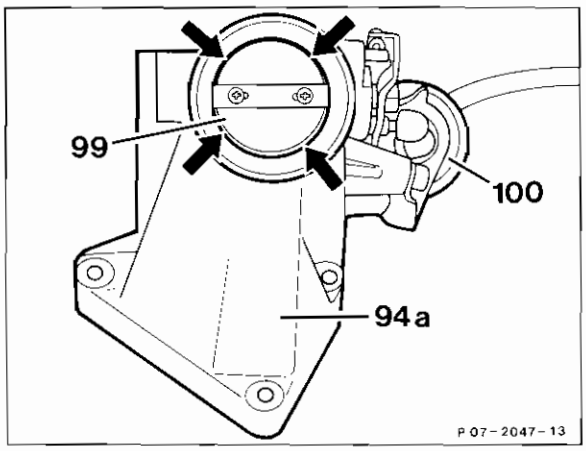

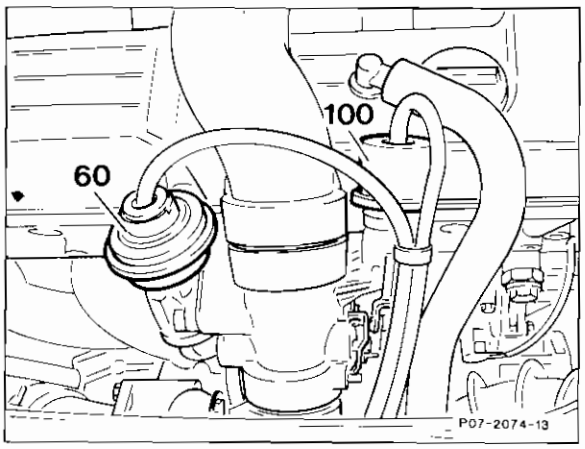

60 EGR valve
100 Vacuum actuator

Vacuum line layout

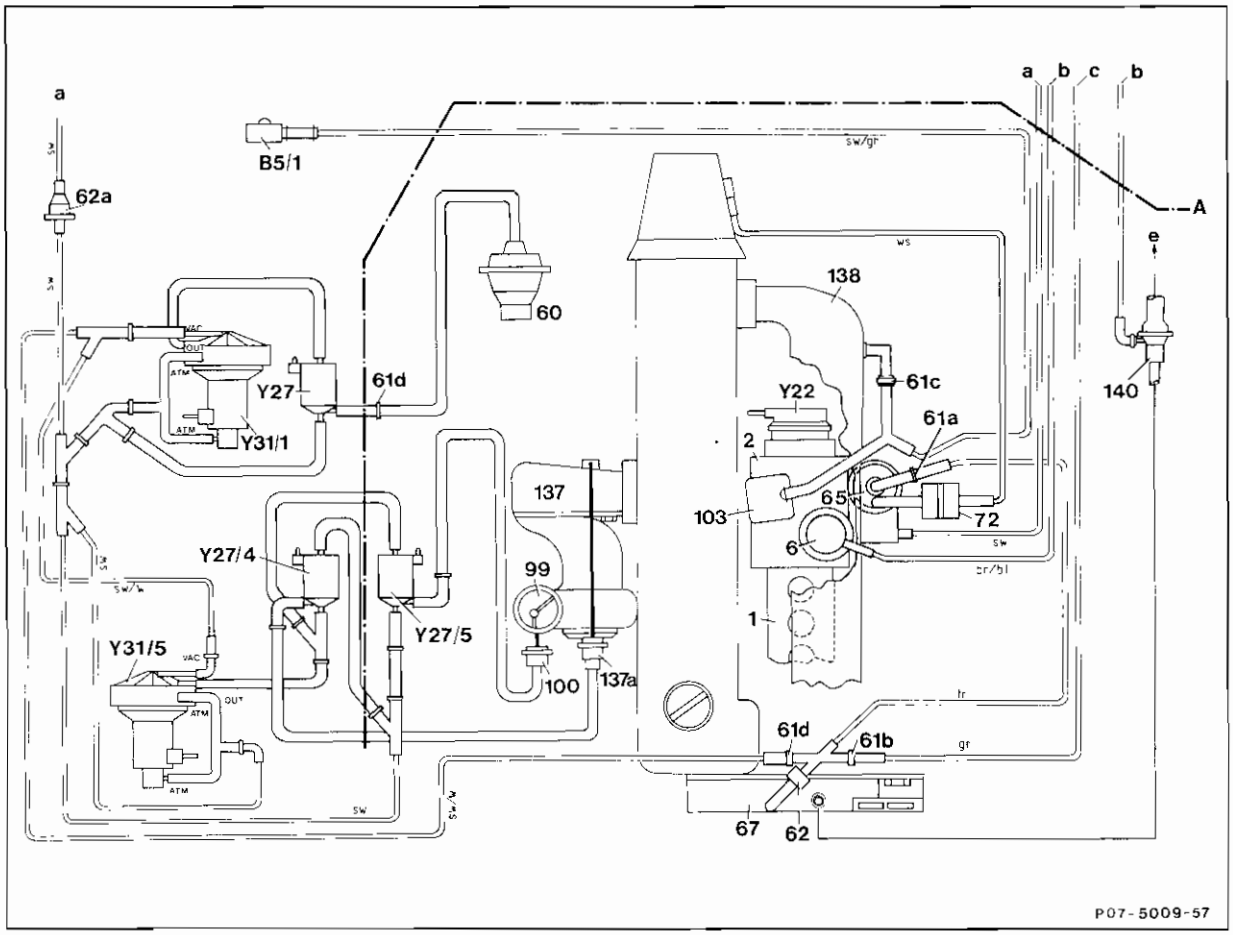

1	Injection pump
2	Governor
6	Vacuum shut-off unit
60	EGR valve
61b	Orifice
61d	Connection piece (without orifice)
62	Filter
62a	Filter
65	Vacuum control valve
67	Vacuum pump
72	Damper
99	Pressure control flap
100	Pressure control flap vacuum actuator
103	Aneroid compensator (ALDA)
137	Turbocharger
137a	Boost pressure control valve vacuum actuator
138	Intake manifold
140	Brake booster check valve
B5/1	Pressure sensor (EDS)
Y22	Electromagnetic actuator, electronic idle speed control (ELR)
Y27	EGR switchover valve
Y27/4	Boost pressure control switchover valve
Y27/5	Pressure control flap switchover valve
Y31/1	EGR vacuum transducer
Y31/5	Boost pressure control/pressure control flap vacuum transducer

A	Firewall
a	Vent line to passenger compartment
b	Key shut-off
c	Remaining vacuum consumers
e	Brake booster

Pressure and vacuum connections at vacuum transducers

VAC	Vacuum from vacuum pump
ATM	Vent line to passenger compartment
OUT	From vacuum transducer (Y31/1) to EGR switchover valve (Y27)
OUT	From vacuum transducer (Y31/5) to switchover valves (Y27/4) and (Y27/5)

sw	black
w or ws	white
gr	grey
br	brown
bl	blue
tr	transparent

Electric wiring diagram

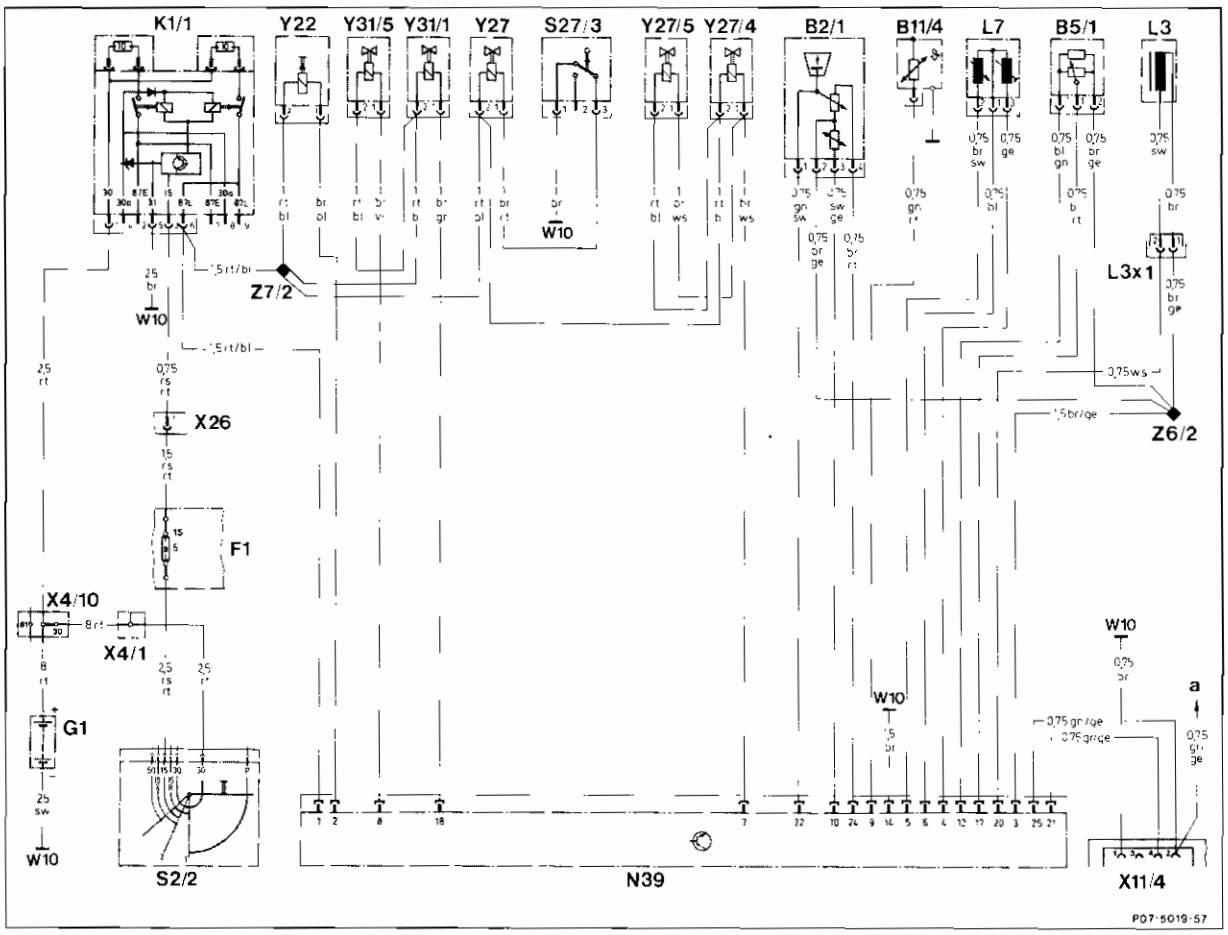

B2/1	Air flow sensor with intake air temperature sensor (EDS)	Y27/4	Boost pressure control switchover valve
B5/1	Pressure sensor (EDS)	Y27/5	Pressure control flap switchover valve
B11/4	Coolant temperature sensor	Y31/1	EGR valve vacuum transducer
F1	Fuse and relay box	Y31/5	Boost pressure control/pressure control flap vacuum transducer
G1	Battery	Z6/2	Connector sleeve, ground supply (solder joint in connector)
K1/1	Overvoltage protection relay, 87E (7-pole)	Z7/2	Connector sleeve, terminal 87 (solder joint in harness)
L3	Starter ring gear speed sensor		
L3x1	Connector, starter ring gear speed sensor		
L7	Fuel rack position sensor		
N39	EDS control unit	a	To A/C compressor control unit (N6), pin 4
S2/2	Glow/starter switch	b	To A/C compressor control unit (N6), pin 4
S27/3	Microswitch (EGR)		
W10	Ground, battery	sw	black
X4/1	Terminal block, terminal 30/interior (2-pole)	ws	white
X4/10	Terminal block, terminal 30/61, battery (3-pole)	gr	grey
X11/4	Test connection for diagnosis (impulse readout, 8-pole)	ge	yellow
		gn	green
X26	Connector, interior/engine (12-pole)	bl	blue
Y22	Electromagnetic actuator, electronic idle speed control (ELR)	br	brown
		rt	red
Y27	EGR switchover valve	rs	pink

Electronic diesel system (EDS) test

The test is divided into the following:

- Diagnosis,
- Electrical test program,
- Function test, electronic idle speed control, EGR, P2-control.

Diagnosis

Test conditions:

- Coolant temperature 60 – 80 °C,
- Automatic climate control off,
- Selector lever in position "P",
- Overvoltage protection fuse OK,
- Battery voltage approx. 12 volts at overvoltage protection relay between sockets 1 and 5.

Special tools

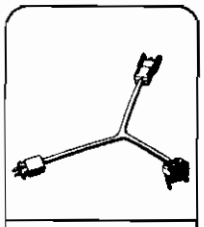
102 589 04 63 00

201 589 00 99 00

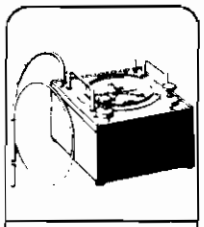
201 589 13 21 00

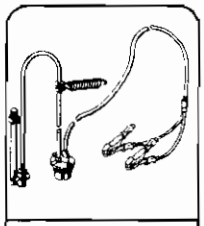
603 589 00 21 00

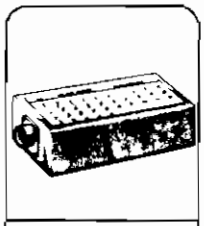
124 589 00 21 00

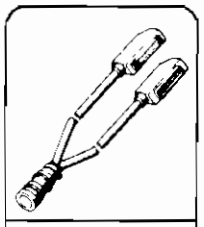
124 589 33 63 00

124 589 19 21 00

Equipment

Multimeter [1]	Fluke models 23, 83, 85, 87 Sun DMM-5
Engine analyzer [1]	Bear DACE (Model 40-960) Sun EMT-1019/Master 3 Sun MCM-2110 Sun MEA-1500MB
Y-distributor 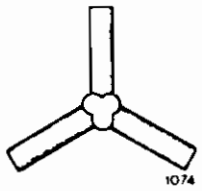 1074 8	117 078 01 45

1) Available through the MBNA Standard Equipment Program

Connection diagram

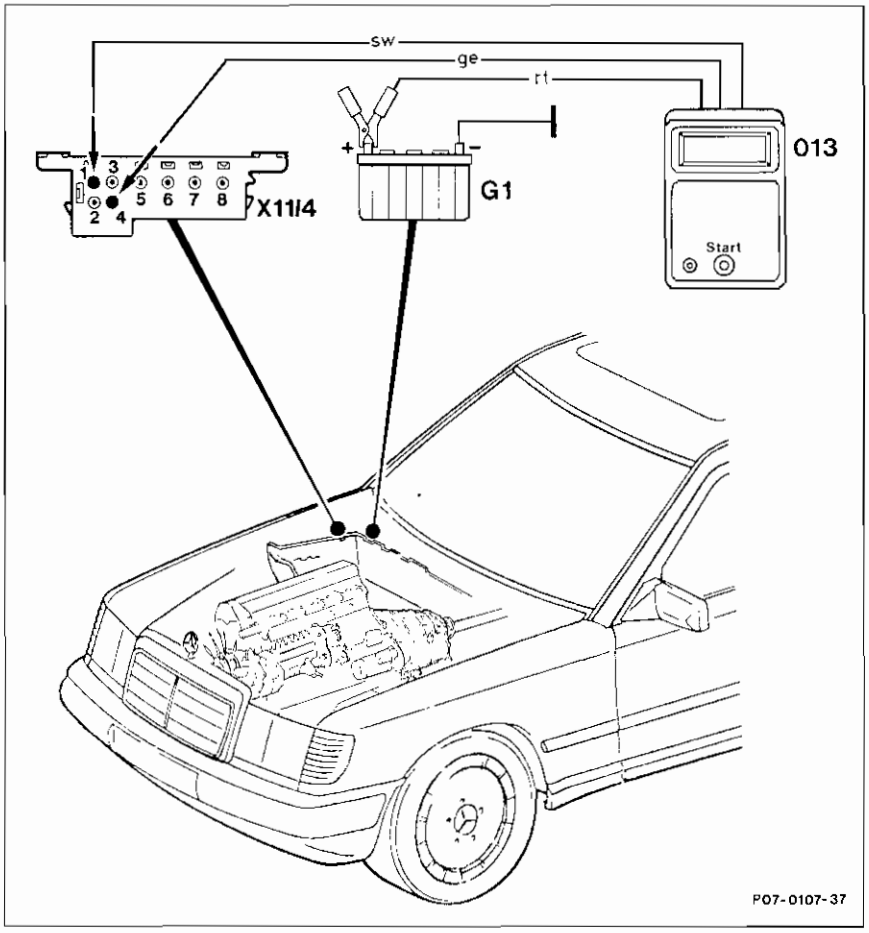

013 Impulse counter
G1 Battery
X11/4 Test connection for diagnosis

sw black
ge yellow
rt red

Layout (X11/4)

1 Ground
2 TD-signal
4 EDS control unit impulse readout

Note regarding impulse readout:
If the impulse readout does not indicate a malfunction in spite of a complaint, perform function test.
The number "1" indicates that there are no recognized malfunctions in the electronic system. All further numbers refer to a particular component or malfunction source.
Numbers ranging from 1 to 15 may be displayed on the impulse counter.
If the LED "U-Batt" lights after connecting the impulse counter, then the impulse counter and voltage supply for the impulse counter are ok.

Testing with impulse counter

1 Connect impulse counter according to connection diagram.

Note:
LED "U-Batt" in display must light up, otherwise:

a) Check impulse counter fuse,
b) Check socket 1 of test connection (X11/4) against the positive pole of the battery (11–14 V),
c) Check socket 4 of test connection (X11/4) against socket 1 (6–12 V).

2 **Engine at idle.**

3 Press start button for 2 to 4 seconds.

4 Read and note impulse readout displayed.
Display "1" = no malfunction stored,
Greater than "1" = malfunction in system.

5 Press start button again for 2 to 4 seconds. If there are no further malfunctions in the system, the previously displayed number will reappear. If additional malfunctions exist, then the respective malfunction code will be displayed.

6 Repeat step 5 until the first number displayed is repeated.

7 Eliminate noted malfunctions (impulse readout) according to troubleshooting chart.

8 Perform tests of individual components.

Erasing malfunction memory:
After eliminating a malfunction, the respective impulse readout must be cleared as follows:

9 Press start button and read out the eliminated malfunction. Then press the start button for 6 to 8 seconds.

Note:
Each malfunction displayed must be **erased individually**.
If the malfunction has been eliminated and its respective readout erased, then the malfunction code will no longer be displayed when performing the impulse readout.
If the number displayed is greater than 1, then there are further malfunctions in the system.

Malfunction table

The respective number in the display of the impulse counter indicates whether a component is defective, which one it is, or whether or not components in the control circuit are defective.

EDS control unit

Impulse readout	Component/malfunction circuit
1 [1]	All functions ok, no malfunction stored
2	Fuel rack position sensor (L7)
3	Air flow sensor (B2/1)
4	EDS control unit (N39), atmospheric pressure sensor
5	EGR valve vacuum transducer (Y31/1) or malfunction in EGR control circuit
6	EDS control unit (N39), internal voltage supply
7	Starter ring gear speed sensor (L3)
8	Coolant temperature sensor (B11/4)
9	Intake air temperature sensor (B2/1a)
10	Voltage supply
11 [2]	Electronic idle speed control actuator or EGR valve vacuum transducer (Y31/1)
12	Not used
13	EDS control unit (N39) defective (internal memory)
14	EDS pressure sensor (B5/1) defective
15	Boost pressure control/pressure control flap vacuum transducer (Y31/5) or defect in boost pressure control circuit.

1) If there are complaints nonetheless, perform function tests for electronic idle speed control, EGR and P2-control.
2) Displayed only if there a short circuit.

Electrical test program

Connection diagram, socket box

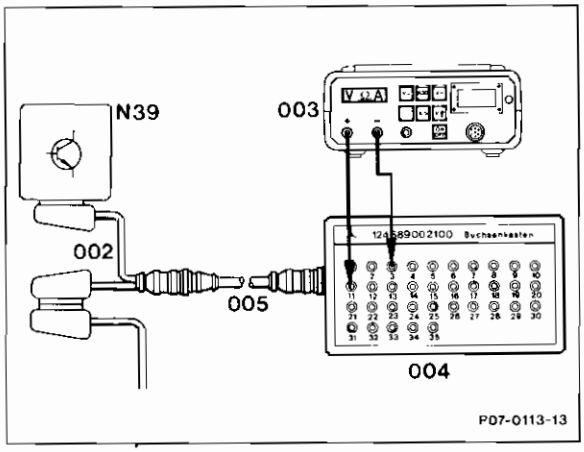

002 25-pole test cable 124 589 33 63 00
003 Multimeter
004 35-pole socket box 124 589 00 21 00
005 Test cable 124 589 34 63 00
N39 EDS control unit

Equipment/test symbols

Socket box
Multimeter
Socket
Pin
Voltage measurement (DC volts)
Resistance measurement (Ohms)

Note:
If nominal values cannot be met when performing pneumatic tests, ensure that all vacuum lines and connections are in order by comparing routing and connections to applicable EDS vacuum schematic.

Test program

Impulse readout	Test step/ test scope	Test connection	Test condition	Nominal value	Possible cause/remedy
1	1.0	–	–	–	No malfunction stored.
2	2.0 Fuel rack position sensor (L7)	N39 4 — Ω — 5 4 — Ω — 6 4 — Ω — 3 4 — Ω — 1	Ignition: **OFF** EDS control unit unplugged.	50 ±4 Ω 25 ±2 Ω ∞ Ω ∞ Ω	Replace injection pump, Wiring.

Impulse readout	Test step/ test scope	Test connection	Test condition	Nominal value	Possible cause/remedy
[2]	2.1 Fuel rack position sensor (L7)	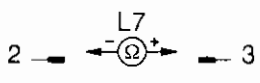	Ignition: **OFF** Connector on fuel rack position sensor (L7) unplugged.	50 ± 4 Ω	Replace injection pump.
		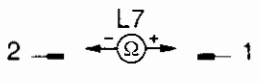	Connector on fuel rack position sensor (L7) unplugged.	25 ± 2 Ω	Replace injection pump.
	2.2 Wiring	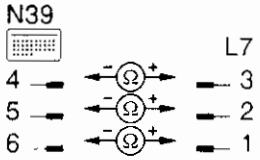	Connector on fuel rack position sensor (L7) unplugged.	< 1 Ω	Open circuit.
3	3.0 Air flow sensor (B2/1)	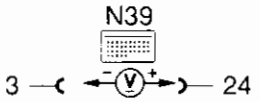	Ignition: **ON** EDS control unit (N39) connected.	5 ± 0.5 V	EDS control unit (N39).
		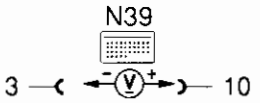	Ignition: **ON**	< 0.5 V	Open circuit.
		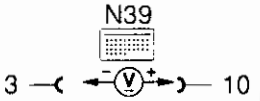	Engine: **at Idle**	1.7 ± 0.2 V [1]	EDS control unit (N39).

[1] Voltage increases with increasing rpm.

Impulse readout	Test step/ test scope	Test connection	Test condition	Nominal value	Possible cause/remedy
[3]	3.1 Air flow sensor (B2/1)	N39 3 — Ω — 24	Ignition: **OFF** EDS control unit (N39) unplugged.	500 – 1200 Ω	Air flow sensor (B2/1).
		N39 3 — Ω — 10	Air flow sensor plate, rest position.	50 – 200 Ω	Air flow sensor (B2/1).
		N39 3 — Ω — 10	Air flow sensor plate, fully deflected.	560 – 1100 Ω	Air flow sensor (B2/1).
	3.2 Wiring	N39 10 — Ω — B2/1 3	Connector on air flow sensor (B2/1) unplugged.	< 1 Ω	Open circuit.
		N39 24 — Ω — B2/1 4		< 1 Ω	Open circuit.
4	4.0				Atmospheric pressure sensor, replace EDS control unit (N39).
5 [1]	5.0 EGR valve vacuum transducer (Y31/1)	N39 18 — V — 1	Engine: **at 700 ± 50 rpm**	> 3 V [1]	Supply line (black/white) leaking, Vent line (black) clogged, Vent filter (62a) clogged. Supply line (black/white) or vacuum line (black rubber) closed or interrupted. EGR valve vacuum transducer (Y31/1), Wiring, EDS control unit (N39), Air flow sensor (B2/1), EGR valve, Coolant temperature sensor.
	EGR valve	Vacuum tester with Y-distributor at EGR valve.		approx. 250 mbar [1]	

[1] Briefly apply full throttle. Vacuum and voltage fall. The test values are approximate.

Impulse readout	Test step/ test scope	Test connection	Test condition	Nominal value	Possible cause/remedy
[5]	5.1 Wiring (Y31/1)	N39 Y31/1 18 — Ω — 1	Connector on vacuum transducer (Y31/1) unplugged.	< 1 Ω	Open circuit.
		N39 Y31/1 1 — Ω — 2		< 1 Ω	Open circuit.
	5.2 EGR microswitch (S27/3)	S27/3 1 — Ω — 3	Ignition: **OFF** Microswitch connector unplugged -Accel. pedal **not** in full load position.	< 1 Ω	EGR microswitch (S27/3).
			-Accel. pedal in full load position.	∞ Ω	
	5.3 Wire between EGR microswitch (S27/3) and EGR switch-over valve (Y27)	S27/3 Y27 3 — Ω — 1	Ignition: **OFF** Connector on EGR switch-over valve (Y27) and connector on EGR micro-switch (S27/3) unplugged.	< 1 Ω	Open circuit.
	5.4 EGR switchover valve (Y27)	Vacuum tester with Y-distributor at switchover valve (side outlet).	Engine: **at Idle**	> 250 mbar	EGR switchover valve (Y27).
			Full throttle	< 10 mbar	
6	6.0	–	–	–	Internal voltage supply, replace EDS control unit (N39).

Impulse readout	Test step/ test scope	Test connection	Test condition	Nominal value	Possible cause/remedy
7	7.0 Starter ring gear speed sensor (L3)	N39 3 — (V) — 20	Engine: **at Idle** EDS control unit unplugged.	>2 V~ 1)	Speed sensor, gap, dirt, Wiring.
	7.1 TD-signal	N39 3 — (V) — 25	Engine: **at Idle** EDS control unit connected.	>3.5V~ 2)	Short circuit in wire from N39 to (X11/4) or EDS control unit (N39).
	7.2 Starter ring gear speed sensor (L3)	N39 3 — (Ω) — 20	Ignition: **OFF** EDS control unit unplugged.	Beru 3) 527 Ω ± 10 % VDO 3) 1900 Ω ± 10 %	Starter ring gear speed sensor (L3), Wiring.
		L3x1 1 — (Ω) — 2	Connector (L3x1) unplugged.	Beru 3) 527 Ω ± 10 % VDO 3) 1900 Ω ± 10 %	Starter ring gear speed sensor (L3).
	7.3 Wiring	N39 20 — (Ω) — L3x1 2		< 1 Ω	Open circuit.
		N39 3 — (Ω) — L3x1 1		< 1 Ω	Open circuit.

1) Voltage increases with increasing rpm.
2) Voltage decreases with increasing rpm.
3) Measured at 20 °C ambient temperature (for every 10 °C difference in ambient temperature, the resistance changes by 4 %).

Impulse readout	Test step/ test scope	Test connection	Test condition	Nominal value	Possible cause/remedy
8	8.0 Coolant temperature sensor (B11/4)	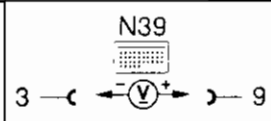	Ignition: **ON** EDS control unit connected.	1)	Coolant temperature sensor, Wiring, EDS control unit.
	8.1 Coolant temperature sensor (B11/4)	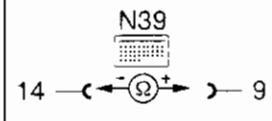	Ignition: **OFF** EDS control unit unplugged.	1)	Coolant temperature sensor, Wiring.
		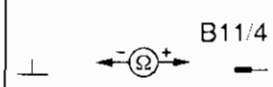	Connector (B11/4) unplugged.	1)	Coolant temperature sensor.
	8.2 Wiring	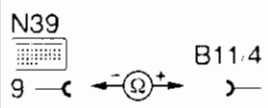	Ignition: **OFF** EDS control unit unplugged.	< 1 Ω	Open circuit
9	9.0 Intake air temperature sensor (B2/1a)	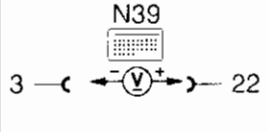	Ignition: **ON** EDS control unit connected.	1)	Air flow sensor with intake air temperature sensor (B2/1), Wiring, EDS control unit (N39).
	9.1 Intake air temperature sensor (B2/1a)	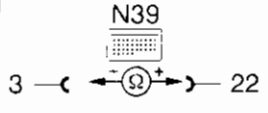	Ignition: **OFF** EDS control unit unplugged.	1)	Wiring to intake air temperature sensor, Intake air temperature sensor (B2/1a).
			Connector on air flow sensor (B2/1) unplugged.	1)	Intake air temperature sensor (B2/1a).

1) See table for coolant and intake air temperature sensors.

Impulse readout	Test step/ test scope	Test connection	Test condition	Nominal value	Possible cause/remedy
[9]	9.2 Wiring	N39 22 — B2/1 1	Ignition: **OFF** EDS control unit unplugged, connector on air flow sensor (B2/1) unplugged.	< 1 Ω	Open circuit.
		N39 3 — B2/1 2		< 1 Ω	Open circuit.
10	10.0 Voltage supply	N39 14 — 1	Engine: **at approx. 1500 rpm**	11–14 V	Voltage > 18 V, voltage regulator.
11 [1]	11.0 Electro-magnetic actuator, electronic idle speed control (Y22)	N39 3 — 2	Engine: **at approx. 1500 rpm** EDS control unit connected.	11–14 V	Actuator (Y22), Wiring.
		N39 2 — 1	Engine: **at Idle**	1.5 ± 0.5 V [2]	EDS control unit (N39), perform test steps 5 and 15.
	11.1	N39 1 — 2	Ignition: **OFF** EDS control unit unplugged.	4 ± 1 Ω	Actuator (Y22), Wiring.
	11.2 Wiring	N39 1 — Y22 2	Ignition: **OFF** Connector on actuator (Y22) unplugged.	< 1 Ω	Open circuit.
		N39 2 — Y22 1		< 1 Ω	Open circuit.

1) Displayed only if there is a short circuit.
2) Reference value only, voltage decreases with increasing engine speed.

Impulse readout	Test step/ test scope	Test connection	Test condition	Nominal value	Possible cause/remedy
13	13.0	-	-	-	Replace EDS control unit (N39).
14	14.0 Pressure sensor (B5/1)	N39 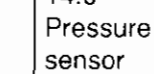 3 — 12	Ignition: **ON** EDS control unit connected.	> 4.9 V	Pressure sensor, Wiring.
	14.1 Pressure sensor (B5/1)	N39 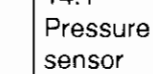 3 — 17 Vacuum tester with Y-distributor at pressure sensor.	Engine: **at Idle** Briefly apply full throttle.	> 1.5 V 0 mbar Voltage increases as pressure increases > 500 mbar	Pressure sensor, Pressure lines, Wiring.
	14.2 Pressure sensor (B5/1)	N39 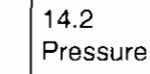 3 — 12	Ignition: **OFF** EDS control unit unplugged.	3 ± 0.2 kΩ	Pressure sensor, Wiring.
	14.3 Wiring	N39 B5/1 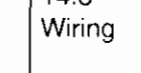 3 — 2	Ignition: **OFF** EDS control unit unplugged.	< 1 Ω	Open circuit.
	14.4 Wiring	N39 B5/1 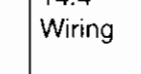 12 — 3	Ignition: **OFF** EDS control unit unplugged.	< 1 Ω	Open circuit.
	14.5 Wiring	N39 B5/1 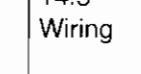 17 — 1	Ignition: **OFF** EDS control unit unplugged.	< 1 Ω	Open circuit.

Impulse readout	Test step/ test scope	Test connection	Test condition	Nominal value	Possible cause/remedy
15	15.0 Vacuum transducer (Y31/5)	N39 8 — 1	Engine: **at Idle** EDS control unit connected.	>4 V [1]	Supply line (black/white) leak, Vent line (black) clogged, Vent filter (62a) dirty.
	Boost pressure control/ pressure control flap	Vacuum tester with Y-distributor at vacuum transducer (Y31/5) outlet (OUT).		>300 mbar [1]	Supply line (black/white) or vacuum line (black rubber) clogged or leaks, Vacuum transducer (Y31/5), Open circuit, EDS control unit (N39).
	15.1 Wiring	N39 — Y31/5 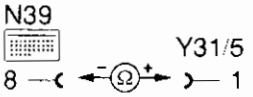 8 — 1 N39 — Y31/5 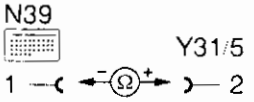 1 — 2	Ignition: **OFF** EDS control unit unplugged, connector at Y31/5 unplugged.	<1 Ω <1 Ω	Open circuit.
	15.2 Boost pressure control switchover valve (Y27/4)	N39 7 — 1 Vacuum tester with Y-distributor at switchover valve (Y27/4) (side connection).	EDS control unit connected. Engine: **at Idle** **Engine speed:** >1000 rpm [2]	12 V >300 mbar <1 V <10 mbar	Boost pressure control switchover valve (Y27/4), EDS control unit (N39), Open circuit.
	15.3 Pressure control flap switchover valve (Y27/5)	N39 7 — 1 Vacuum tester with Y-distributor at switchover valve (Y27/5) (side connection).	EDS control unit connected. Engine: **at Idle** **Engine speed:** >1000 rpm [2]	12 V >300 mbar < 1 V >200 mbar	Pressure control flap switchover valve (Y27/5), EDS control unit (N39), Open circuit.

1) Voltage and vacuum decrease with increasing rpm

2) Slowly increase engine speed to 1000 rpm **(from idle)**

Impulse readout	Test step/ test scope	Test connection	Test condition	Nominal value	Possible cause/remedy
[15]	15.4 Wiring (Y27/4)	N39 Y27/4 7 — Ω — 1 N39 Y27/4 1 — Ω — 2	Ignition: **OFF** EDS control unit unplugged, connector at Y27/4 unplugged.	< 1 Ω < 1 Ω	Open circuit.
	15.5 Wiring (Y27/5)	Y27/4 Y27/5 1 — Ω — 1 Y27/4 Y27/5 2 — Ω — 2	Ignition: **OFF** connector at Y27/4, Y27/5 unplugged.	< 1 Ω < 1 Ω	Open circuit.

Coolant and intake air temperature sensors

Temperature in °C	Resistance (± 10 %)	Voltage (± 10 %)
20	2.5 kΩ	3.85 V
30	1.7 kΩ	3.47 V
40	1.18 kΩ	3.05 V
50	833 Ω	2.63 V
60	600 Ω	2.22 V
70	440 Ω	1.85 V
80	327 Ω	1.5 V
90	243 Ω	1.22 V
100	185 Ω	0.99 V

Function test, electronic idle speed control (ELR), EGR, P2-control

Note:
This test should be performed if, in spite of a complaint, the impulse readout does not indicate a malfunction.

Engine 602.96

Test step/ test scope	Test connection/ equipment	Test condition	Nominal value	Possible cause/ remedy
1.0 Idle speed control	Connect tachometer to test connection (X11/4).	Engine: **at Idle** Coolant temperature approx. 80 °C.	680 ± 20 rpm	Actuator, Injection pump, Starter ring gear speed sensor (L3), EDS control unit (N39), see test steps 7 and 11 (EDS test).
		Connector on actuator unplugged.	610 ± 20 rpm	Adjust engine speed at injection pump, Injection pump.
2.0 EGR control circuit	Connect vacuum tester with Y-distributor to EGR valve.	Engine at 900 ± 50 rpm and approx. 300 mbar, briefly apply full throttle.	Vacuum decreases	Vacuum transducer (Y31/1), Vacuum switchover valve (Y27), Mechanically check air flow sensor (B2/1), EDS control unit (N39), EGR valve, Pneumatic connections.
3.0 EGR valve	Connect vacuum tester directly to EGR valve.	Engine: **OFF** Apply 300 mbar vacuum to EGR valve. Pull off vacuum line.	EGR valve closes audibly	Replace EGR valve.

Test step/ test scope	Test connection/ equipment	Test condition	Nominal value	Possible cause/ remedy
4.0 Boost pressure control	Connect vacuum tester (20) with Y-distributor to outlet (OUT) of vacuum transducer (Y31/3).	Engine: **at Idle**	>300 mbar	Vacuum supply, Vacuum line, Vacuum transducer (Y31/3), EDS control unit (N39).
Boost pressure control valve vacuum actuator		Slowly increase engine speed to approx. 2000 rpm.	Vacuum decreases	
4.1 Pressure control flap vacuum actuator (100)	Connect vacuum tester (20) with Y-distributor to pressure control flap vacuum actuator (100).	Engine: **at Idle**	<100 mbar	Vacuum supply, Vacuum line.
		Slowly increase engine speed to approx. 2000 rpm.	Vacuum increases	Vacuum transducer (Y31/2), Pressure line at pressure sensor (B5/1), EDS control unit (N39).

Automatic transmission

Deletion of secondary pump

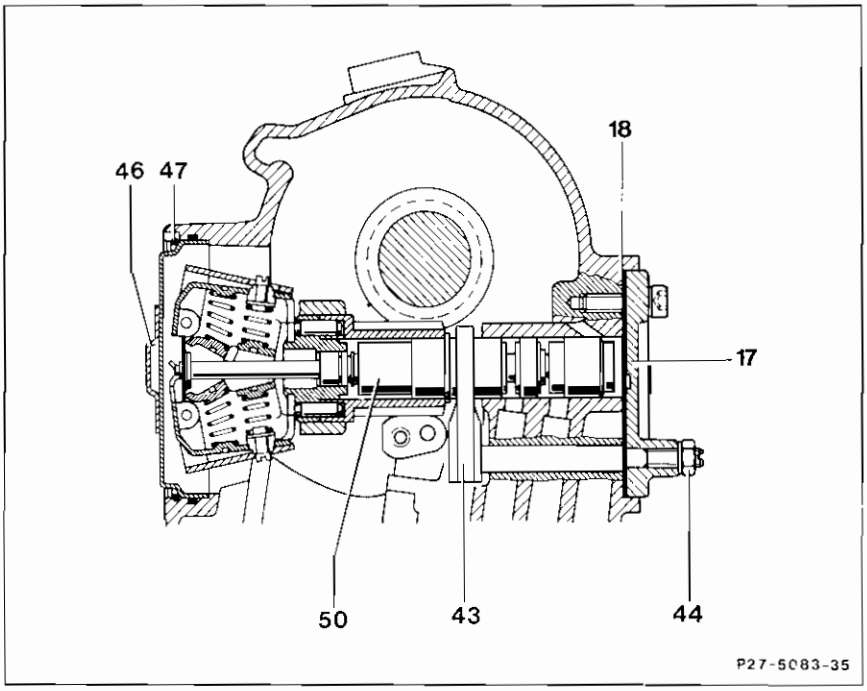

Transmission 722.3

17 Cover
18 Gasket
43 Axial bracket
44 Nut, axial bracket
46 Governor cover
47 Snap ring
50 Governor

The secondary pump was deleted. As a result, it is no longer possible to tow-start the engine. Towing of the vehicle is still possible as previously, i.e. selector lever in position "N", maximum towing speed of 50 km/h (31 mph) and a maximum distance of 50 km (31 miles).

A cover (17) and gasket (18) are used to close off the existing bores for the secondary pump in the transmission housing.

In conjunction with this change, the bores for the secondary pump in the large intermediate plate (14) have also been deleted. The check valves (49) and (67) as well as the secondary pump shift valve (66) have been eliminated as well.

This does not apply to 5-speed automatic transmission 722.5 installed in model 129.061, which still uses the shift valve (66), but only as a closure plug.

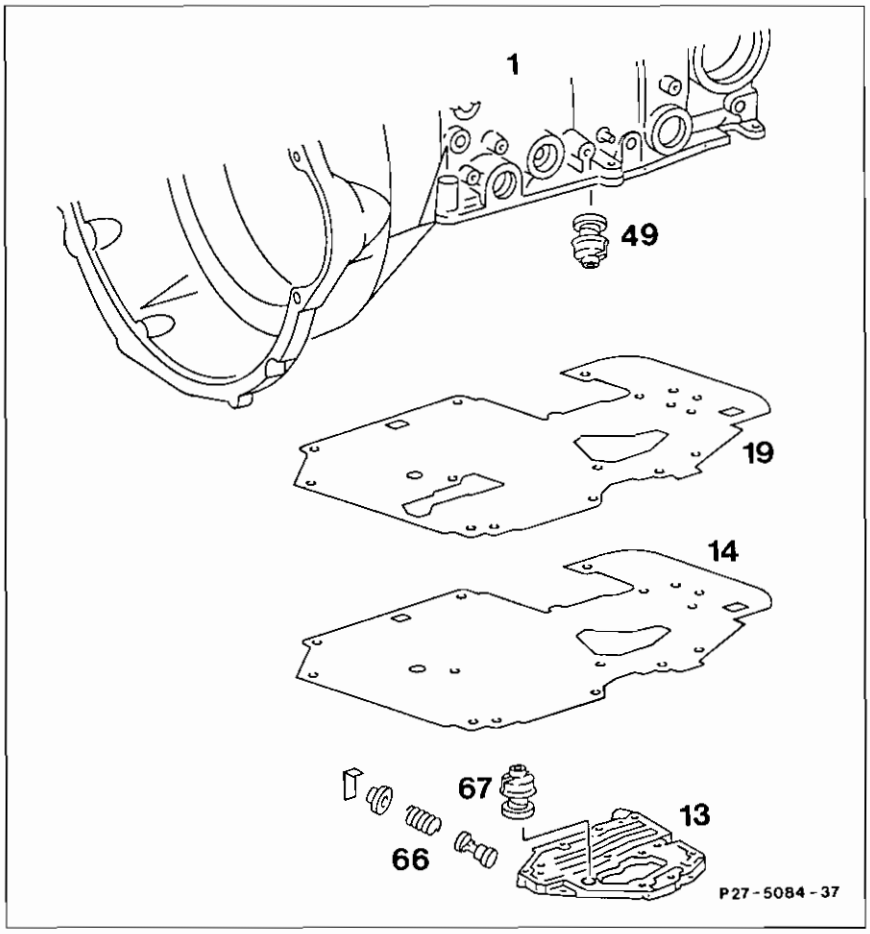

1 Transmission housing
13 Lower cover
14 Large intermediate plate
19 Gasket
49 Check valve
66 Shift valve - secondary pump
67 Check valve

Upshift delay

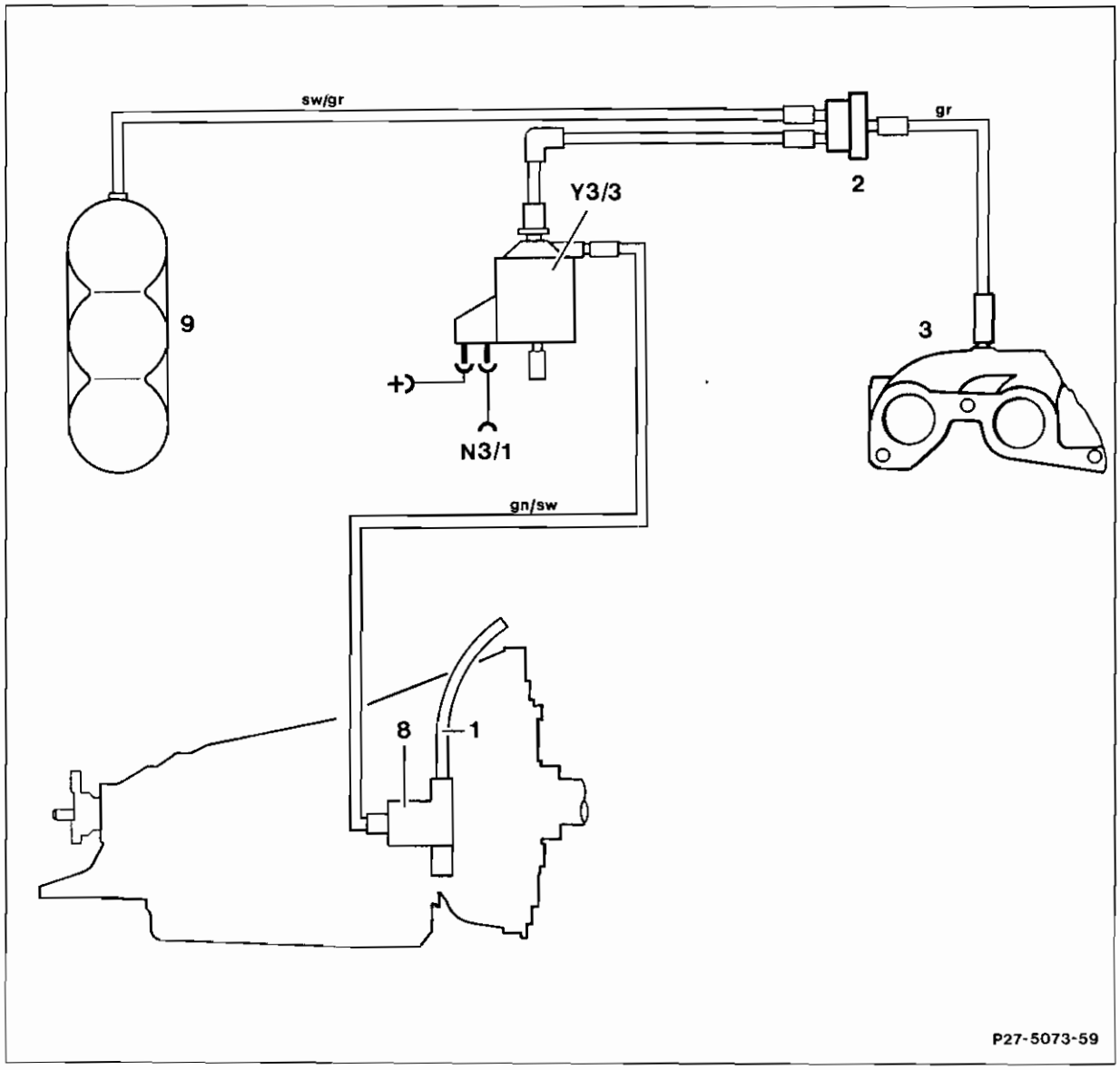

1 Control pressure cable
2 Check valve
3 Intake manifold
8 Upshift delay vacuum element
9 Vacuum reservoir

N3/1 LH control unit (N3 - CIS-E control unit)
Y3/3 Upshift delay switchover valve

sw black
gr grey
gn green

Modified upshift delay for rapid heating of catalyst

The upshift delay previously controlled by a relay (K29) and a solenoid (Y3/2) in the governor pressure circuit has been eliminated. The upshift delay is now actuated pneumatically by means of a switchover valve (Y3/3) and a vacuum element (8) on the control pressure bowden cable. This modifies the bowden cable's influence on the control valve (46) in the valve body.

Operation

Depending on the coolant temperature, vehicle speed and running time, the upshift delay switchover valve (Y3/3) receives ground via the CIS-E control unit (N3). The vacuum element (8) then receives vacuum via the switchover valve under the following conditions:

- Coolant temperature approx. 0 °C to 50 °C max.,
- Vehicle speed between 6 mph (10 km/h) and 30 mph (48 km/h).

Upshift delay remains active for a maximum of approx. 80 seconds. Under light throttle the shift point for the 2 – 3 upshift is raised, thereby increasing the engine rpm and heating the catalyst quicker. The above mentioned values are nominal values and can vary depending on engine version.

Vacuum element (8)

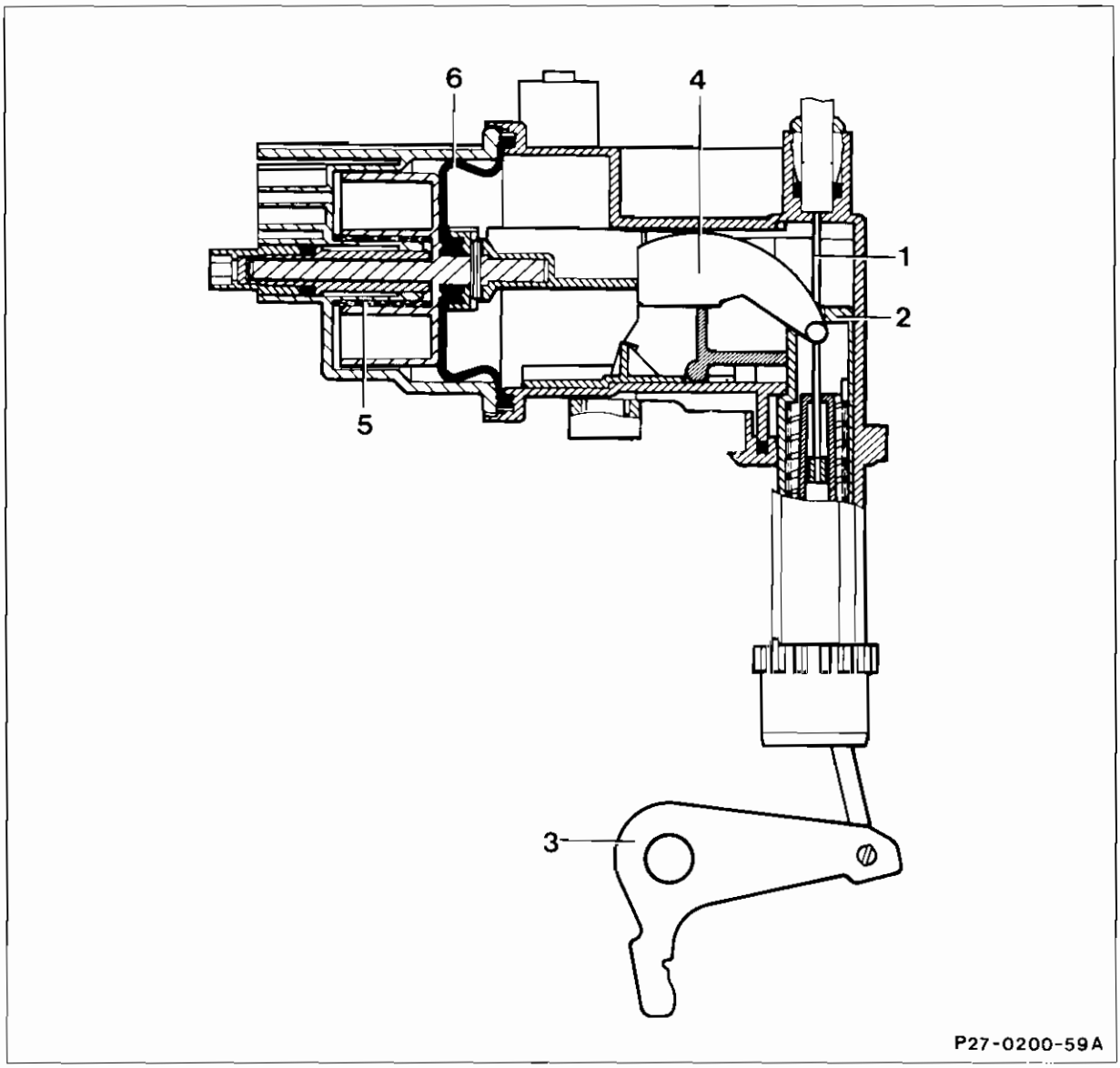

1	Control pressure cable	4	Lever
2	Shift valve	5	Spring
3	Lever	6	Diaphragm

Vacuum pulls the diaphragm (6) to the left against the force of the spring (5). By means of a lever (4), the shift valve (2) is then moved upwards, independent of the control pressure bowden cable (1).

This causes the shift valve (2) to move the control pressure valve via a connecting rod and lever (3).

Rear axle

General information

The rear axle ratio was changed in models 124.026, 201.028/029.

Gear set and rear axle shaft

Model		124.026	201.028	201.029
Transmission version		automatic	automatic	automatic
Rear axle center piece	Ring gear dia. (mm)	185	185	185
	Ratio	2.87	2.85 [1]	2.85 [1]
	No. of teeth	43:15	37:13	37:13
Gear/rotor on drive pinion for ABS/ASD	No. of teeth	33	34	34
Constant velocity joint flange dia. (mm)		90	90	90
Rear axle shaft with constant velocity joint	Ball dia. inner (mm)	22.225	19.05	22.225
	Ball dia. outer (mm)	22.225	19.05	22.225
	Inner bolt circle diameter (mm)	94	86	94
	Shaft dia. (mm)	25	25	25
	Grease fill quantity (g) inner	120	100	120
	Grease fill quantity (g) outer	120	100	120

[1] matched gear set

Steering

Steering wheel (140-design)

All models are equipped with a newly designed steering wheel which is 400 mm in diameter (*Sportline* models 390 mm). The steering wheel, along with the transmission shift/selector lever knob, are covered in leather. The steering wheel in model 129 is color coordinated to the interior.

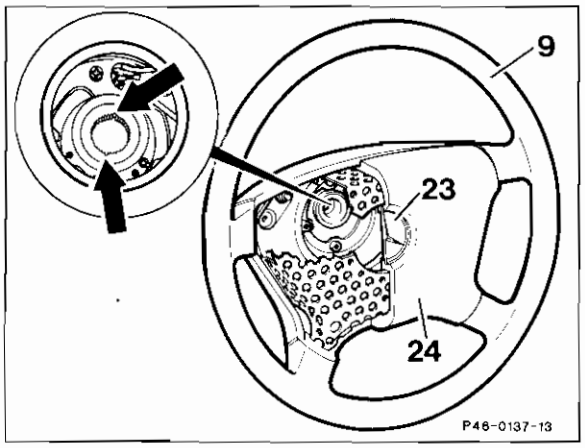

Installation note:
Correct positioning of the steering wheel during installation is assured by two grooves in the hub (arrows) and by a mark on the steering shaft spindle.

Electrical system - equipment and instruments

Instrument cluster

CHECK ENGINE warning lamp (A1e26)
Federal version models are no longer equipped with a CHECK ENGINE warning lamp. As a result, the O_2-sensor signal is no longer being monitored in these models.

California version models remain equipped with a CHECK ENGINE warning lamp to indicate an emissions-related component failure.

General information

A sports package (i.e. *Sportline*) is available for models 124.030/051 and 201.029. *Sportline* models were developed to provide enhanced characteristics for performance oriented drivers.

Sportline models are identified by two badges on the vehicle front quarter panels and a leather covered shift knob with a *Sportline* emblem.

Sportline equipment modifications are detailed as follows:

Suspension

Modifications

The following suspension components have been modified to increase handling performance:

- Front and rear springs,
- Front damper struts,
- Rear shock absorbers,
- Control arm bushings,
- Torsion bars.

The sport tuned springs and shocks are approximately 20% firmer than the standard components installed.

The overall vehicle height is lowered approx. 21 mm for model 201.029 and approx. 23 mm for models 124.030/051.

Test and adjustment data

Cross reference - springs-damper struts/shock absorbers

Model	Front spring part no.	Front damper strut part no.	Rear spring part no.	Rear shock absorber part no.
124.030	124 321 29 04	124 320 56 30	124 324 23 04 124 324 28 04	124 320 17 31
124.051	124 321 29 04	124 320 56 30	124 324 28 04	124 320 17 31
201.029	201 321 37 04 201 321 38 04	201 320 44 30	201 324 39 04	201 320 12 31

Front axle - number of points

Model	124.030	124.051	201.029
Base points	57	62	49
Sliding/lifting roof	3	3	2
Automatic transmission	Standard	Standard	4
Automatic locking differential (ASD)	Not available	Not available	1
Headlamp cleaning system	Standard	Standard	1

Cross reference - front springs/rubber mounts

Model	Total points	Front spring part no.	Height of rubber mounts (mm) according to spring color code	
			blue	red
124.030/051	53 – 59 60 – 66	124 321 29 04	13 18	18 23
201.029	up to 49 50 – 57	201 321 37 04 201 321 38 04	18 8	23 13

Rear axle - number of points

Model	124.030	124.051	201.029
Base points	29	41	19
Sliding/lifting roof	3	3	3
Automatic transmission	Standard	Standard	1
Automatic locking differential (ASD)	Not available	Not available	3
Rear head restraints	Standard	Standard	1

Cross reference - rear springs/rubber mounts

Model	Total points	Rear spring part no.	Height of rubber mounts (mm) according to spring color code	
			blue	red
124.030	21 – 31	124 324 23 04	13	18
124.030/051	32 – 41 42 – 50	124 324 28 04	8 13	13 18
201.029	up to 25	201 324 39 04	8	13
201.029	26 – 34	201 324 39 04	13	18

Wheels, chassis measurement, wheel alignment

Wheels

Cross reference - wheels/tires/recommended tire brands

Model	Rim designation part no.	Summer tires, tubeless		Winter tires, tubeless	
		Tire size	Brand	Tire size	Brand
124.030 124.051	Light alloy 7 J×15 H 2 ET 41 [1] 124 401 13 02	205/60 ZR 15	GOODYEAR EAGLE NCT 2 MICHELIN MXV	205/60 R 15 91 H M+S	DUNLOP SP WINTER SPORT
201.029	Light alloy 7 J×15 H 2 ET 44 [1] [2] 201 400 13 02	205/55 ZR 15	PIRELLI P6 MICHELIN MXV	205/55 R 15 87 T M+S	PIRELLI MS WINTER 190 or CONTINENTAL SUPER CONTACT TS 740
				205/55 R 15 87 H M+S	DUNLOP SP WINTER SPORT

[1] Only use balancing weights with separate spring retaining clip.
[2] Only use adhesive balancing weights on inside of rim.

Light-alloy wheel rims
Models 124.030/051
A newly designed 8-hole light-alloy wheel with the following designation is installed:
7J ×15 H 2 ET 41.

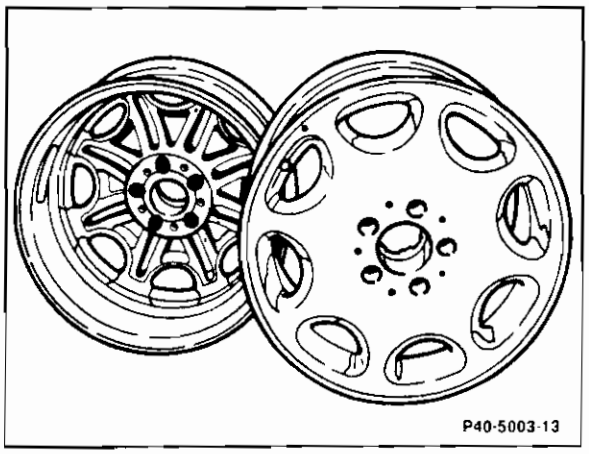

Model 201.029
The 15-hole light-alloy wheel known from model 201.034 is installed and has the following designation: 7 J×15 H 2 ET 44.

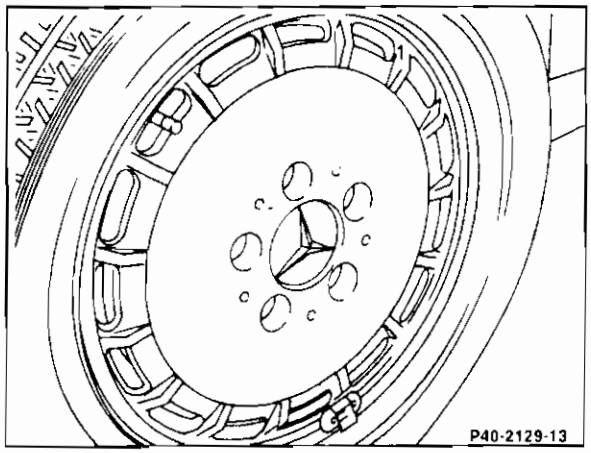

Wheel bolts for light-alloy wheel rims
Models 124.030/051, 201.029
The wheel bolts are identical for all *Sportline* models.
Part no. 201 400 00 70
Height of head "K" = 22.5 mm
Bolt shank length "L" = 40 mm
The screw head is hollow and is covered with a light-alloy cap.

Tightening torque: 110 Nm.

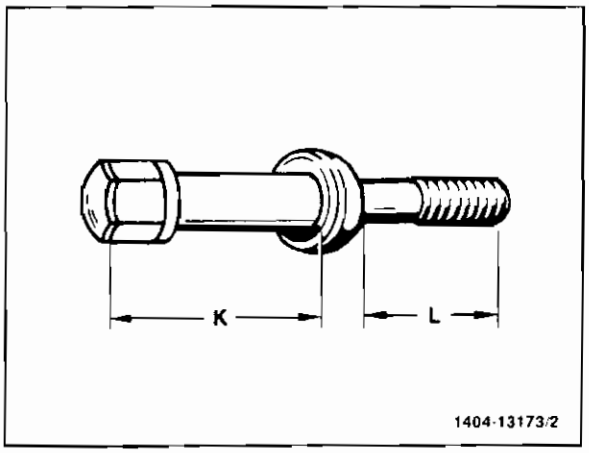

Wheel alignment

Test and adjustment data

Vehicle level

Models	Front axle (vehicle at curb weight) mm	Rear axle (vehicle at curb weight) mm
124.030/051	$+2^{+10}_{-15}$	$+3^{+10}_{-12}$
201.029	$+2^{+10}_{-15}$	$+6^{+10}_{-12}$

Front axle wheel alignment at specified vehicle level (curb weight)

Model		124.030/051 **[201.029]**	
Camber [1]	Wheels in straight ahead position (toe 0°)	$-0°50'^{+10'}_{-20'}$	$(-0.85°^{+0.15°}_{-0.35°})$
	Permissible difference between right and left	0°20'	(0.35°)
Caster [1]	Wheels in straight ahead position (toe 0°)	10°40' + 30' **[10°40' – 30'**	(10.65° + 0.50°) **(10.65° – 0.50°)]**
	Measured against wheel stop	10°25' ± 30'	(10.40° ± 0.50°)
	Permissible difference between right and left	0°30'	(0.50°)
Toe-in [1] (Front wheels spread with 90 – 110 N force)		0°20' ± 10'	(0.35° ± 0.15°)
Toe-out with inner wheel turned 20° [2]		–0°55' ± 30' **[–0°40' ± 30'**	(–0.90° ± 0.50°) **(–0.60° ± 0.50°)]**
Maximum permissible steering angle at inner wheel [3]		43°	(43.00°)
Ball joint position [4]		27.5 ± 2 mm **[30 ± 2 mm]**	
Permissible ball joint height difference between pitman and idler arms		3 mm	

1) Tolerance is for checking only. If outside of tolerance, adjust to specified value.
2) Value given does not include toe.
3) Wheel angle on outside wheel will be 7° to 11° less than on inside wheel.
4) Correction is made on idler arm in upward or downward direction by addition or removal of washer.

Note:
Values in **bold** text and in brackets [ ] are for model 201.029.

Values in parentheses ( ) are decimal degrees.

Steering

Cross reference, model/steering gear

Model	124.030	124.051	201.029
Steering gear	765.928	765.904	765.927
Ratio (standard ratio in parentheses)	13.28 (13.91)	13.91 (14.61)	13.91 (14.61)

Steering wheel (140-design)

Sportline models are equipped with a newly designed steering wheel which is 390 mm in diameter (standard models 400 mm). The steering wheel is covered in leather.

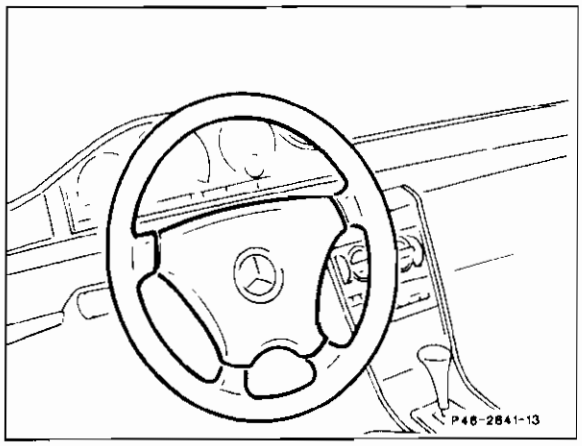

Seats

Sport 4-place seating

Model 201.029
Sport 4-place seating known from model 201.034 is installed and is available only in leather in the following interior colors: creme beige, black, blue, dark brown and grey.

Model 124.030
Sport 4-place leather seating is installed and is available only in the following interior colors: creme beige, black, blue, dark brown and grey.

Model 124.051
Sport 4-place leather seating continues to be standard in this model and is available in all eight interior colors.